KONICA MINOLTA

SERVICE MANUAL

bizhub

364e/284e/224e

Date: 2013/11/27

KONICA MINOLTA, INC.

Table of Contents

Revision history....1

A SAFETY AND IMPORTANT WARNING ITEMS....A-1

1. IMPORTANT NOTICE....A-2
2. DESCRIPTION ITEMS FOR DANGER, WARNING AND CAUTION....A-3
   - 2.1 Description items in this Service Manual....A-3
   - 2.2 Description items for safety and important warning items....A-3
3. SAFETY WARNINGS....A-4
   - 3.1 MODIFICATIONS NOT AUTHORIZED BY KONICA MINOLTA, INC....A-4
     - 3.1.1 Actions requiring special attention....A-4
   - 3.2 POWER PLUG SELECTION....A-5
     - 3.2.1 Power Cord Set or Power Plug....A-5
   - 3.3 CHECKPOINTS WHEN PERFORMING ON-SITE SERVICE....A-6
     - 3.3.1 Power Supply....A-7
     - 3.3.2 Installation Requirements....A-11
     - 3.3.3 After Service....A-13
   - 3.4 FUSE....A-18
   - 3.5 Used Batteries Precautions....A-19
     - 3.5.1 ALL Areas....A-19
     - 3.5.2 Germany....A-19
     - 3.5.3 France....A-19
     - 3.5.4 Denmark....A-19
     - 3.5.5 Finland, Sweden....A-19
     - 3.5.6 Norway....A-19
   - 3.6 Laser Safety....A-20
     - 3.6.1 Laser Safety....A-20
     - 3.6.2 Internal Laser Radiation....A-20
     - 3.6.3 Laser Safety Label....A-23
     - 3.6.4 Laser Caution Label....A-23
     - 3.6.5 PRECAUTIONS FOR HANDLING THE LASER EQUIPMENT....A-24
4. WARNING INDICATIONS ON THE MACHINE....A-25
   - 4.1 Warning indications inside the machine....A-25
   - 4.2 Warning indications on the boards....A-26
5. MEASURES TO TAKE IN CASE OF AN ACCIDENT....A-27

B NOTATION OF THE CONTENTS....B-1

1. PRECAUTION ON HANDLING THIS MANUAL....B-1
2. PRODUCT NAME....B-2
3. BRAND NAME....B-3
   - 3.1 TRADEMARKS OF OTHER COMPANIES....B-3
   - 3.2 OWN TRADEMARKS....B-3
4. FEEDING DIRECTION....B-4

C PRODUCT SPECIFICATIONS....C-1

1. bizhub 364e/284e/224e....C-1
   - 1.1 Type....C-1
   - 1.2 Functions....C-1
   - 1.3 Paper....C-2
   - 1.4 Materials....C-3
     - 1.4.1 Conditions for defining the life value for the field standard yield....C-3
   - 1.5 Print volume....C-3
   - 1.6 Machine specifications....C-3
   - 1.7 Operating environment....C-4
   - 1.8 Print functions....C-4
   - 1.9 Scan functions....C-5
   - 1.10 Note for the Specifications....C-5
2. DF-624....C-6
   - 2.1 Type....C-6
   - 2.2 Functions....C-6
   - 2.3 Paper....C-6
   - 2.4 Particular originals....C-6
   - 2.5 Prohibited originals....C-6
   - 2.6 Mixed original feed chart....C-7
   - 2.7 Machine specifications....C-7
   - 2.8 Operating environment....C-7
   - 2.9 Note for the Specifications....C-7

3. DF-701....C-8
3.1 Type....C-8
3.2 Functions....C-8
3.3 Paper....C-8
3.4 Particular originals....C-8
3.5 Prohibited originals....C-8
3.6 Mixed original feed chart....C-9
3.7 Machine specifications....C-9
3.8 Operating environment....C-9
3.9 Note for the Specifications....C-9
4. PC-110/PC-210....C-10
4.1 Type....C-10
4.2 Paper....C-10
4.3 Machine specifications....C-10
4.4 Operating environment....C-10
4.5 Note for the Specifications....C-10
5. PC-410....C-11
5.1 Type....C-11
5.2 Paper....C-11
5.3 Machine specifications....C-11
5.4 Operating environment....C-11
5.5 Note for the Specifications....C-11
6. JS-506....C-12
6.1 Type....C-12
6.2 Functions....C-12
6.3 Paper....C-12
6.4 Offset function....C-12
6.5 Machine specifications....C-12
6.6 Operating environment....C-13
6.7 NOTE....C-13
7. FS-533....C-14
7.1 Type....C-14
7.2 Functions....C-14
7.3 Paper process ability....C-14
7.3.1 Non sort/sort/group....C-14
7.3.2 Sort offset/group offset....C-14
7.3.3 Sort staple....C-15
7.4 Machine specifications....C-16
7.5 Operating environment....C-16
7.6 Note for the Specifications....C-16
8. PK-519....C-17
8.1 Type....C-17
8.2 Functions....C-17
8.3 Paper....C-17
8.4 Machine specifications....C-17
8.5 Operating environment....C-17
8.6 Note for the Specifications....C-17
9. FS-534....C-18
9.1 Type....C-18
9.2 Functions....C-18
9.3 Paper process ability....C-18
9.3.1 Non sort/sort/group....C-18
9.3.2 Sort offset/group offset....C-20
9.3.3 Sort staple....C-20
9.4 Machine specifications....C-21
9.5 Operating environment....C-21
9.6 Note for the Specifications....C-21
10. FS-534/FS-534SD....C-22
10.1 Type....C-22
10.2 Functions....C-22
10.3 Paper....C-22
10.3.1 Non sort/sort/group....C-22
10.3.2 Sort offset/group offset....C-24
10.3.3 Sort staple....C-25
10.4 Machine specifications....C-26
10.5 Operating environment....C-26
10.6 Note for the Specifications....C-26
11. PK-520....C-27

11.1 Type....C-27
11.2 Functions....C-27
11.3 Paper....C-27
11.4 Machine specifications....C-27
11.5 Operating environment....C-27
11.6 Note for the Specifications....C-27
12. SD-511....C-28
12.1 Type....C-28
12.2 Paper....C-28
12.2.1 Saddle stitching/folding....C-28
12.2.2 Tri-folding....C-28
12.3 Machine specifications....C-28
12.4 Operating environment....C-28
12.5 Consumables....C-29
12.6 Note for the Specifications....C-29
13. i-Option LK-101 v3/102 v2/104 v3/105 v3/106/107/108/110/111....C-30
13.1 Available function for i-Option....C-30
13.1.1 List of advanced functions....C-30
13.1.2 Types of advanced functions....C-30
13.1.3 Activation procedures of i-Option....C-31
13.2 Web browser function....C-31
14. FK-511/508....C-33
14.1 Basic specifications....C-33
14.1.1 General specifications....C-33
14.1.2 Scanning section....C-33
14.1.3 Recording section....C-34
14.1.4 Line connecting section....C-34
14.1.5 Operation panel....C-34
14.2 Functional specifications....C-35
14.2.1 Dial functions....C-35
14.2.2 Transmission....C-36
14.2.3 Polling....C-37
14.2.4 Line seizure mode and telephone function....C-37
14.2.5 Message reception and record....C-37
14.2.6 Memory function....C-38
14.2.7 Various communication function....C-38
14.2.8 User lists / reports....C-38
14.2.9 Other user functions....C-39
14.3 Network fax specifications....C-39
14.3.1 Internet fax....C-39
14.3.2 IP address fax....C-40
D OVERALL COMPOSITION....D-1
1. SYSTEM CONFIGURATION....D-1
1.1 System front view....D-1
1.2 System rear view....D-1
2. SECTION CONFIGURATION....D-3
3. PAPER PATH....D-4
4. CONTROL BLOCK DIAGRAM....D-5
5. IMAGE CREATION PROCESS....D-6
6. IMAGE FORMING CONTROL....D-7
7 PROCESS SPEED....D-8
E SERVICE TOOL....E-1
1. bizhub C364e/C284e/C224e....E-1
1.1 Service material list....E-1
1.2 CE tool list....E-1
1.3 Utility tool....E-1
1.3.1 IC card information setting tool of AU-201/AU-202H/SCL-010/YSoft card reader....E-1
2. DF-701/DF-624....E-5
2.1 CE tool list....E-5
F PERIODICAL MAINTENANCE....F-1
1. Concept of periodical maintenance....F-1
2. Periodical maintenance items....F-2
2.1 bizhub 364e/284e/224e....F-2
2.1.1 bizhub 364e....F-2

2.1.2 bizhub 284e....F-2
2.1.3 bizhub 224e....F-3
2.2 Option....F-4
2.2.1 DF-701....F-4
2.2.2 DF-624....F-4
2.2.3 PC-110/PC-410....F-4
2.2.4 PC-210....F-5
2.2.5 FS-534....F-5
2.2.6 SD-511....F-5
2.2.7 FS-533....F-5
3. Periodical replacement parts list....F-6
3.1 bizhub 364e/284e/224e....F-6
3.2 Option....F-7
3.2.1 DF-701....F-7
3.2.2 DF-624....F-7
3.2.3 PC-110....F-7
3.2.4 PC-210....F-7
3.2.5 PC-410....F-7
3.2.6 FS-534....F-7
3.2.7 SD-511....F-7
3.2.8 FS-533....F-8
4. Periodical cleaning parts list....F-9
4.1 Main unit....F-9
4.2 DF-701....F-9
4.3 DF-624....F-9
4.4 FS-534....F-9
4.5 SD-511....F-10
4.6 FS-533....F-10
5. Concept of parts life....F-11
5.1 Life value of consumables and parts....F-11
5.1.1 Specified conditions of field standard yield....F-11
5.2 Details of the life specifications....F-12
6. Periodical maintenance procedure bizhub 364e/284e/224e....F-13
6.1 Housing section....F-13
6.1.1 Replacing the ozone filter....F-13
6.2 Photo conductor section....F-13
6.2.1 Replacing the drum unit....F-13
6.3 Charging section....F-15
6.3.1 Cleaning of the electrostatic charger comb electrode....F-15
6.4 Developing section....F-15
6.4.1 Replacing the developing unit....F-15
6.5 Toner supply section....F-16
6.5.1 Replacing the toner cartridge....F-16
6.6 1st transfer section....F-17
6.6.1 Cleaning of the image transfer entrance guide....F-17
6.6.2 Cleaning of the IDC sensor window....F-17
6.6.3 Replacing the transfer belt unit....F-18
6.7 2nd transfer/separation section....F-20
6.7.1 Replacing the transfer roller unit....F-20
6.8 Toner collection section....F-21
6.8.1 Replacing the waste toner box....F-21
6.8.2 Cleaning of the area around the waste toner collecting port....F-21
6.9 Paper feed section....F-22
6.9.1 Replacing the tray 1 feed roller, tray 1 pick-up roller, tray 1 separation roller....F-22
6.9.2 Replacing the tray 2 feed roller, tray 2 pick-up roller, tray 2 separation roller....F-22
6.9.3 Replacing the manual bypass tray feed roller, manual bypass tray separation roller assy....F-22
6.10 Registration section....F-24
6.10.1 Cleaning of the registration roller....F-24
6.11 Fusing section....F-24
6.11.1 Replacing the fusing unit....F-24
6.12 Duplex section....F-26
6.12.1 Cleaning of the duplex transport rollers....F-26
7. Periodical maintenance procedure DF-701....F-27
7.1 Take-up section....F-27
7.1.1 Cleaning of the pick-up roller/feed roller....F-27
7.1.2 Cleaning of the separation roller....F-27
7.1.3 Replacing the pick-up roller/feed roller....F-28
7.1.4 Replacing the separation roller assy....F-29
7.2 Transport section....F-30

7.2.1 Cleaning of the miscellaneous rolls....F-30
7.2.2 Cleaning of the miscellaneous rollers....F-31
7.3 Scanning section....F-33
7.3.1 Cleaning of the front side scanning guide....F-33
7.3.2 Cleaning of the reflective sensor section....F-33
8. Periodical maintenance procedure DF-624....F-35
8.1 Take-up section....F-35
8.1.1 Cleaning of the pick-up roller/feed roller....F-35
8.1.2 Cleaning of the separation roller....F-35
8.1.3 Replacing the pick-up roller/feed roller....F-36
8.1.4 Replacing the separation roller assy....F-37
8.2 Transport section....F-38
8.2.1 Cleaning of the miscellaneous rolls....F-38
8.2.2 Cleaning of the miscellaneous rollers....F-39
8.3 Scanning section....F-40
8.3.1 Cleaning of the scanning guide....F-40
8.3.2 Cleaning of the reflective sensor section....F-40
9. Periodical maintenance procedure PC-110/PC-210....F-42
9.1 Paper feed section....F-42
9.1.1 Replacing the tray 3 feed roller, tray 3 pick-up roller, tray 3 separation roller....F-42
9.1.2 Replacing the tray 4 feed roller, tray 4 pick-up roller, tray 4 separation roller....F-42
10. Periodical maintenance procedure PC-410....F-44
10.1 Paper feed section....F-44
10.1.1 Replacing the feed roller, pick-up roller, separation roller....F-44
11. Periodical maintenance procedure FS-534....F-45
11.1 Paper exit section....F-45
11.1.1 Cleaning procedure for each rollers/each rolls....F-45
11.1.2 Cleaning the paddles....F-45
11.1.3 Replacing the paddle units....F-45
12. Periodical maintenance procedure SD-511....F-48
12.1 Paper exit section....F-48
12.1.1 Cleaning procedure for each rollers/each rolls....F-48
12.1.2 Cleaning the upper paddle....F-48
12.1.3 Cleaning the lower paddle....F-49
12.1.4 Replacing the upper paddle assy....F-49
12.1.5 Replacing the lower paddle unit....F-50
13. Periodical maintenance procedure FS-533....F-51
13.1 Paper exit section....F-51
13.1.1 Cleaning procedure for each parts....F-51
13.1.2 Cleaning the paper exit paddle....F-51
13.2 Alignment section....F-51
13.2.1 Replacing the alignment roller assy F/R....F-51
G DISASSEMBLY/REASSEMBLY....G-1
1. Disassembly/adjustment prohibited items....G-1
1.1 Paint-locked screws....G-1
1.2 Red-painted screws....G-1
1.3 Variable resistors on board....G-1
1.4 Removal/installing of PWBs....G-1
1.5 Warnings for disassembly....G-1
1.6 Warnings / Precautions during setup or transportation....G-2
2. Units from which removing is prohibited....G-3
2.1 CCD unit....G-3
2.1.1 Reason for prohibition....G-3
2.2 PH unit....G-3
2.2.1 Reason for prohibition....G-3
2.3 Fusing unit....G-3
2.3.1 Reason for prohibition....G-3
3. Disassembly/assembly warning/caution items....G-4
3.1 Removal/installing of PWBs....G-4
3.2 Use a special screw....G-4
4. Notes when transporting the machine....G-6
4.1 Protective materials....G-6
4.1.1 Protective materials for the photo conductors....G-6
4.1.2 Scanner packing bracket....G-6
5. bizhub 364e/284e/224e....G-7
5.1 Disassembly/reassembly parts list....G-7

5.1.1 Exterior parts....G-7
5.1.2 Units....G-7
5.1.3 Boards....G-7
5.1.4 Motors....G-8
5.1.5 Clutches....G-8
5.1.6 etc....G-8
5.2 Disassembly/reassembly procedure (Exterior parts)....G-8
5.2.1 Scanner rear cover....G-8
5.2.2 Scanner right cover....G-9
5.2.3 Scanner front cover....G-9
5.2.4 Scanner left cover....G-9
5.2.5 Scanner upper rear cover....G-9
5.2.6 Control panel left cover/1....G-10
5.2.7 Control panel left cover/2....G-10
5.2.8 Control panel right cover....G-10
5.2.9 Control panel upper cover....G-10
5.2.10 Control panel front cover....G-11
5.2.11 Control panel unit....G-12
5.2.12 Original glass....G-14
5.2.13 Front door....G-14
5.2.14 Lower front cover....G-15
5.2.15 Front cover....G-15
5.2.16 Left cover....G-15
5.2.17 Exit tray....G-15
5.2.18 Rear right cover....G-16
5.2.19 Upper right cover....G-16
5.2.20 Lower rear cover/1....G-17
5.2.21 Lower rear cover/2....G-17
5.2.22 Upper rear cover....G-17
5.2.23 Tray 1....G-18
5.2.24 Tray 2....G-18
5.3 Disassembly/reassembly procedure (Units)....G-19
5.3.1 LED exposure unit....G-19
5.3.2 Paper feed unit....G-19
5.3.3 PH unit....G-20
5.3.4 Sub hopper unit....G-22
5.3.5 Right door unit....G-22
5.3.6 Manual bypass tray unit....G-24
5.3.7 Regist unit....G-26
5.3.8 Hard disk....G-27
5.3.9 How to open the PWB box....G-28
5.3.10 Main drive unit....G-29
5.3.11 Transport unit....G-31
5.3.12 Fusing drive unit....G-32
5.3.13 Hopper drive unit....G-35
5.4 Disassembly/reassembly procedure (Boards)....G-37
5.4.1 CCD board (CCDB)....G-37
5.4.2 Scanner drive board (SCDB)....G-39
5.4.3 LED board (LEDB)....G-39
5.4.4 LED control board (LEDCB)....G-40
5.4.5 USB board (USBB)....G-40
5.4.6 Front side board (FRB)....G-40
5.4.7 DC power supply (DCPU)....G-41
5.4.8 PH relay board (PHRYB)....G-42
5.4.9 Printer control board (PRCB)....G-43
5.4.10 SSD board (SSDB)....G-44
5.4.11 Memory board/1 (MEMB/1)....G-44
5.4.12 MFP board (MFPB)....G-45
5.4.13 High voltage unit (HV)....G-47
5.4.14 ERP board (ERPB)....G-47
5.4.15 Tray 1 FD paper size board (FDPSB/1), tray 2 FD paper size board (FDPSB/2)....G-48
5.4.16 Tray 1 CD paper size board (CDPSB/1), tray 2 CD paper size board (CDPSB/2)....G-48
5.4.17 Tray 1 empty indicator board (PEIB/1), tray 2 empty indicator board (PEIB/2)....G-49
5.5 Disassembly/reassembly procedure (Motors)....G-49
5.5.1 Scanner motor (M201)....G-49
5.5.2 ADU transport motor (M5)....G-51
5.5.3 Toner bottle motor (M10)....G-53
5.5.4 Toner supply motor/K (M6)....G-53
5.5.5 Transport motor (M1)....G-53
5.5.6 Fusing motor (M3)....G-54

5.5.7 Fusing pressure motor (M11)....G-54
5.5.8 Reverse motor (M4)....G-55
5.5.9 Tray 1 lift-up motor (M12)....G-56
5.5.10 Tray 2 lift-up motor (M13)....G-56
5.6 Disassembly/reassembly procedure (Clutches)....G-57
5.6.1 Tray 1 paper feed clutch (CL3)....G-57
5.6.2 Tray 2 vertical transport clutch (CL2)....G-57
5.6.3 Tray 2 paper feed clutch (CL1)....G-58
5.6.4 Bypass paper feed clutch (CL7)....G-60
5.6.5 ADU transport clutch (CL6)....G-61
5.6.6 Registration clutch (CL4)....G-62
5.6.7 Paper exit clutch (CL8)....G-62
5.7 Disassembly/reassembly procedure (etc.)....G-63
5.7.1 IDC sensor shutter solenoid (SD2)....G-63
5.7.2 Gate switch solenoid (SD3)....G-63
5.7.3 Developing solenoid (SD4)....G-65
5.7.4 Bypass pick-up solenoid (SD1)....G-65
5.7.5 Bypass CD paper size VR (VR1)....G-67
5.7.6 Transfer belt cleaner cooling fan assy....G-69
6. Option....G-72
6.1 Disassembly/reassembly parts list....G-72
6.1.1 KP-101....G-72
6.1.2 UK-208....G-72
6.1.3 DF-701....G-72
6.1.4 DF-624....G-72
6.1.5 PC-110/PC-210....G-72
6.1.6 PC-410....G-73
6.1.7 JS-506....G-73
6.1.8 FS-534....G-73
6.1.9 PK-520....G-74
6.1.10 SD-511....G-74
6.1.11 FS-533....G-74
6.1.12 PK-519....G-75
6.1.13 FK-508....G-75
6.1.14 FK-511....G-75
6.2 Disassembly/reassembly procedure (KP-101)....G-75
6.2.1 Keypad (KP-101)....G-75
6.3 Disassembly/reassembly procedure (UK-208)....G-75
6.3.1 Upgrade kit (UK-208)....G-75
6.4 Disassembly/reassembly procedure (DF-701/SP-501)....G-78
6.4.1 Front cover (DF-701)....G-78
6.4.2 Rear cover (DF-701)....G-78
6.4.3 Left cover unit (DF-701)....G-79
6.4.4 Dual scan document feeder (DF-701)....G-80
6.4.5 Front side glass cleaning roller unit (DF-701)....G-82
6.4.6 Back side glass cleaning roller unit (DF-701)....G-84
6.4.7 CIS module (CIS) (DF-701)....G-85
6.4.8 DF control board (DFCB) (DF-701)....G-87
6.4.9 Document width sensor (VR1) (DF-701)....G-87
6.4.10 CIS power supply (CISPU) (DF-701)....G-88
6.4.11 Dual scan image processing board (DSIPB) (DF-701)....G-89
6.4.12 Document reading motor (M1) (DF-701)....G-90
6.4.13 Document feed motor (M2) (DF-701)....G-91
6.4.14 Registration motor (M3) (DF-701)....G-91
6.4.15 Reading roller release motor (M4) (DF-701)....G-92
6.4.16 CIS cleaning motor (M5) (DF-701)....G-94
6.4.17 Document reading glass cleaning motor (M6) (DF-701)....G-94
6.4.18 DF cooling fan motor (FM1) (DF-701)....G-94
6.4.19 Stamp unit (SP-501)....G-95
6.4.20 Stamp (SP-501)....G-96
6.5 Disassembly/reassembly procedure (DF-624/SP-501)....G-96
6.5.1 Front cover (DF-624)....G-96
6.5.2 Rear cover (DF-624)....G-97
6.5.3 Left cover unit (DF-624)....G-97
6.5.4 Reverse automatic document feeder (DF-624)....G-99
6.5.5 Glass cleaning roller unit (DF-624)....G-100
6.5.6 DF control board (DFCB) (DF-624)....G-101
6.5.7 Document width size sensor (VR1) (DF-624)....G-102
6.5.8 Document reading motor (M1) (DF-624)....G-103
6.5.9 Document feed motor (M2) (DF-624)....G-103

6.5.10 Registration motor (M3) (DF-624)....G-104
6.5.11 Glass cleaning motor (M4) (DF-624)....G-105
6.5.12 Reading roll release motor (M5) (DF-624)....G-105
6.5.13 DF cooling fan motor (FM1) (DF-624)....G-106
6.5.14 Document exit roller release solenoid (SD1) (DF-624)....G-106
6.5.15 Stamp unit (SP-501)....G-108
6.5.16 Stamp (SP-501)....G-108
6.6 Disassembly/reassembly procedure (PC-110/PC-210)....G-109
6.6.1 Right door (PC-110/PC-210)....G-109
6.6.2 Rear right cover (PC-110/PC-210)....G-109
6.6.3 Rear cover (PC-110/PC-210)....G-110
6.6.4 Tray 3, tray 4, storage box (PC-110/PC-210)....G-110
6.6.5 Paper feed cabinet (PC-110/PC-210)....G-110
6.6.6 Tray 3 paper feed unit (PC-110/PC-210)....G-112
6.6.7 Tray 4 paper feed unit (PC-210)....G-112
6.6.8 PC control board (PCCB) (PC-110/PC-210)....G-113
6.6.9 Tray 3 paper empty indicator board (PEIB/3), tray 4 paper empty indicator board (PEIB/4) (PC-110/PC-210)....G-113
6.6.10 Tray 3 FD paper size board (FDPSB/3), tray 4 FD paper size board (FDPSB/4) (PC-110/PC-210)....G-113
6.6.11 Tray 3 CD paper size board (CDPSB/3) (PC-110/PC-210)....G-114
6.6.12 Tray 4 CD paper size board (CDPSB/4) (PC-210)....G-115
6.6.13 Tray 3 paper feed motor (M111), tray 4 paper feed motor (M121) (PC-110/PC-210)....G-115
6.6.14 Tray 3 vertical transport motor (M112), tray 4 vertical transport motor (M122) (PC-110/PC-210)....G-116
6.6.15 Tray 3 lift-up motor (M113), tray 4 lift-up motor (M123) (PC-110/PC-210)....G-116
6.7 Disassembly/reassembly procedure (PC-410)....G-117
6.7.1 Right door (PC-410)....G-117
6.7.2 Rear right cover (PC-410)....G-117
6.7.3 Rear cover (PC-410)....G-117
6.7.4 Paper feed tray (PC-410)....G-117
6.7.5 Paper feed cabinet (PC-410)....G-118
6.7.6 Paper feed unit (PC-410)....G-119
6.7.7 PC control board (PCCB) (PC-410)....G-120
6.7.8 Tray 3 paper empty indicator board (PEIB/3) (PC-410)....G-120
6.7.9 Paper feed motor (M131) (PC-410)....G-120
6.7.10 Vertical transport motor (M132) (PC-410)....G-121
6.7.11 Elevator motor (M134) (PC-410)....G-121
6.7.12 Shifter motor (M133) (PC-410)....G-122
6.7.13 Wire (PC-410)....G-122
6.8 Disassembly/reassembly procedure (JS-506)....G-125
6.8.1 Exit tray 1 (JS-506)....G-125
6.8.2 Exit tray 2 (JS-506)....G-125
6.8.3 Job separator (JS-506)....G-126
6.8.4 Sensor unit (JS-506)....G-127
6.8.5 JS control board (JSCB) (JS-506)....G-127
6.8.6 Tray shift motor (M1) (JS-506)....G-128
6.9 Disassembly/reassembly procedure (FS-534)....G-129
6.9.1 Rear cover (FS-534)....G-129
6.9.2 Front door (FS-534)....G-129
6.9.3 Front upper cover (FS-534)....G-129
6.9.4 Finisher (FS-534)....G-130
6.9.5 Horizontal transport unit (FS-534)....G-130
6.9.6 Stapler unit (FS-534)....G-131
6.9.7 Sensor unit (FS-534)....G-134
6.9.8 FS control board (FSCB) (FS-534)....G-134
6.9.9 RU transport motor (M1) (FS-534)....G-134
6.9.10 FNS entry transport motor (M2) (FS-534)....G-135
6.9.11 FNS discharge motor (M3) (FS-534)....G-136
6.9.12 Receiving roller retraction motor (M4) (FS-534)....G-136
6.9.13 FNS paddle motor (M5) (FS-534)....G-136
6.9.14 Trailing edge stopper motor (M6) (FS-534)....G-137
6.9.15 Alignment motor/front (M7) (FS-534)....G-137
6.9.16 Alignment motor/rear (M8) (FS-534)....G-138
6.9.17 Pre-eject drive motor (M9) (FS-534)....G-138
6.9.18 Bundle eject motor (M10) (FS-534)....G-140
6.9.19 Main tray up/down motor (M11) (FS-534)....G-141
6.9.20 Paper receiving control motor (M12) (FS-534)....G-142
6.9.21 Side stapler movement motor (M13) (FS-534)....G-142
6.10 Disassembly/reassembly procedure (PK-520)....G-143
6.10.1 Punch kit (PK-520)....G-143
6.11 Disassembly/reassembly procedure (SD-511)....G-144
6.11.1 Front cover (SD-511)....G-144

6.11.2 Saddle unit (SD-511)....G-144
6.11.3 Paper exit tray (SD-511)....G-147
6.11.4 Staple unit (SD-511)....G-147
6.11.5 SD drive board (SDDB) (SD-511)....G-149
6.11.6 SD transport motor (M1) (SD-511)....G-150
6.11.7 Paper discharge control motor (M2) (SD-511)....G-150
6.11.8 Alignment motor (M3) (SD-511)....G-151
6.11.9 Stopper drive motor (M4) (SD-511)....G-151
6.11.10 Center fold roller motor (M5) (SD-511)....G-152
6.11.11 Tri-folding guide motor (M6) (SD-511)....G-152
6.11.12 SD paddle motor (M7) (SD-511)....G-152
6.11.13 Center fold guide motor (M8) (SD-511)....G-153
6.11.14 Center fold knife motor (M9) (SD-511)....G-154
6.11.15 Stopper solenoid (SD1) (SD-511)....G-154
6.12 Disassembly/reassembly procedure (FS-533)....G-157
6.12.1 Front cover (FS-533)....G-157
6.12.2 Upper cover (FS-533)....G-158
6.12.3 Rear cover (FS-533)....G-158
6.12.4 Finisher (FS-533)....G-159
6.12.5 Stapler unit (FS-533)....G-160
6.12.6 Paper exit tray unit (FS-533)....G-161
6.12.7 FS control board (FSCB) (FS-533)....G-161
6.12.8 Stapler relay board (STREYB) (FS-533)....G-162
6.12.9 Paper conveyance motor (M101) (FS-533)....G-162
6.12.10 Paper exit motor (M102) (FS-533)....G-163
6.12.11 Alignment roller motor (M103) (FS-533)....G-163
6.12.12 Exit roller lift up motor (M104) (FS-533)....G-163
6.12.13 Alignment motor/F (M105), Alignment motor/R (M106) (FS-533)....G-164
6.12.14 Stapler movement motor (M107) (FS-533)....G-165
6.12.15 Tray lift up motor (M109) (FS-533)....G-165
6.12.16 Paper surface detect solenoid (SD101) (FS-533)....G-166
6.12.17 Batch solenoid (SD102) (FS-533)....G-168
6.12.18 Paper exit roller solenoid (SD103) (FS-533)....G-168
6.12.19 Paper exit paddle (FS-533)....G-169
6.13 Disassembly/reassembly procedure (PK-519)....G-169
6.13.1 Punch kit (PK-519)....G-169
6.13.2 PK control board (PKCB) (PK-519)....G-170
6.13.3 Punch motor (M201) (PK-519)....G-170
6.14 Disassembly/reassembly procedure (FK-508)....G-171
6.14.1 FAX board (line 3), FAX board (line 4) (FK-508)....G-171
6.15 Disassembly/reassembly procedure (FK-511)....G-172
6.15.1 FAX Kit (Line1), FAX Kit (Line2) (FK-511)....G-172
6.15.2 FAX Kit (Line1), FAX Kit (Line2) (FK-511) (with MK-728)....G-173
7. COMMERCIALLY AVAILABLE PARTS....G-176
7.1 Installing the key counter....G-176
7.1.1 Configuration....G-176
7.1.2 Procedure....G-176
7.2 Installing the original size detection sensor/2 (PS205)....G-180
7.2.1 Procedure....G-180
H CLEANING/LUBRICATION....H-1
1. bizhub 364e/284e/224e....H-1
1.1 Cleaning parts list....H-1
1.2 Lubrication parts list....H-1
1.3 Cleaning procedure....H-1
1.3.1 Transfer belt unit....H-1
1.3.2 PH window....H-1
1.3.3 Tray 1 feed roller, tray 1 pick-up roller, tray 1 separation roller....H-2
1.3.4 Tray 2 feed roller, tray 2 pick-up roller, tray 2 separation roller....H-2
1.3.5 Tray 2 transport roller....H-2
1.3.6 Manual bypass tray feed roller....H-3
1.3.7 Manual bypass tray separation roller....H-3
1.3.8 Original glass....H-3
1.3.9 Scanner rails....H-4
1.3.10 Mirrors....H-4
1.3.11 Lens....H-4
1.3.12 CCD sensor....H-5
2. Option....H-6
2.1 Cleaning parts list....H-6
2.1.1 DF-701....H-6

2.1.2 PC-110/PC-210....H-6
2.1.3 PC-410....H-6
2.2 Cleaning procedure (DF-701)....H-6
2.2.1 Back side scanning glass....H-6
2.2.2 Back side scanning guide/Back side scanning shading shaft....H-6
2.3 Cleaning procedure (PC-110/PC-210)....H-7
2.3.1 Tray 3 feed roller, tray 3 pick-up roller, tray 3 separation roller....H-7
2.3.2 Tray 4 feed roller, tray 4 pick-up roller, tray 4 separation roller....H-7
2.3.3 Tray 3 vertical transport roller, tray 4 vertical transport roller....H-7
2.4 Cleaning procedure (PC-410)....H-8
2.4.1 Feed roller, Pick-up roller, Separation roller....H-8
2.4.2 Vertical transport roller....H-8
I ADJUSTMENT/SETTING....I-1
1. POINT TO CHECK....I-1
1.1 How To Use The Adjustment/Setting Section....I-1
1.1.1 Outline....I-1
1.1.2 Advance checks....I-1
1.2 Operating The Touch Panel....I-1
1.2.1 Precautions for Using the Touch Panel....I-1
1.2.2 Operating the Touch Panel....I-2
1.2.3 Operation of Keypad....I-5
1.2.4 Switching the Entry or Selection Screen....I-6
2. ACCESSIBILITY....I-7
Accessibility....I-7
2.1 Touch Panel Adjustment....I-7
2.1.1 Use....I-7
2.1.2 Procedure....I-7
2.2 Brightness Adjustment....I-7
2.2.1 Procedure....I-7
2.3 Key Repeat Start/Interval Time....I-7
2.3.1 Time To Start....I-7
2.3.2 Interval....I-7
2.4 System Auto Reset Confirmation....I-8
2.4.1 Use....I-8
2.4.2 Default setting....I-8
2.4.3 Setting item....I-8
2.5 Auto Reset Confirmation....I-8
2.5.1 Use....I-8
2.5.2 Default setting....I-8
2.5.3 Setting item....I-8
2.6 Enlarge Display Mode Confirmation....I-8
2.6.1 Use....I-8
2.6.2 Default setting....I-8
2.6.3 Setting item....I-8
2.7 Message Display Time....I-8
2.7.1 Use....I-8
2.7.2 Default setting....I-8
2.7.3 Setting item....I-8
2.8 Sound Setting....I-8
2.8.1 Sound Setting....I-8
2.8.2 Sound Type/Volume Setting....I-9
2.9 Default Enlarge Display Settings....I-10
2.9.1 Use....I-10
2.9.2 Procedure....I-11
2.10 Voice Guidance Settings....I-11
2.10.1 Voice Guidance Settings....I-11
2.10.2 Volume....I-11
2.10.3 Voice Speed....I-11
2.11 Double Tap Interval Settings....I-11
2.11.1 Procedure....I-11
3. COUNTER....I-12
Counter....I-12
3.1 Meter Count....I-12
3.1.1 Meter Count....I-12
3.1.2 Copy....I-12
3.1.3 Print....I-12
3.1.4 Scan/Fax....I-12
3.1.5 Other....I-12
3.1.6 Print List....I-12

3.1.7 Coverage Rate....I-13
3.1.8 Eco Info....I-13
3.2 Display Keypad....I-13
3.2.1 Use....I-13
4. UTILITY....I-14
4.1 List of utility mode (outline)....I-14
4.2 List of utility mode (detail)....I-15
4.2.1 One-Touch/User Box Registration....I-15
4.2.2 User Settings....I-16
4.2.3 Administrator Settings....I-19
4.2.4 Other Settings....I-31
4.3 Starting/Exiting....I-33
4.3.1 Starting procedure....I-33
4.3.2 Exiting procedure....I-33
5. UTILITY (ONE-TOUCH/USER BOX REGISTRATION)....I-34
One-Touch User Box Registration-Outline....I-34
5.1 Create One-Touch Destination....I-34
5.1.1 Address Book (Public)/(Personal)....I-34
5.1.2 Group....I-35
5.1.3 E-Mail Settings....I-35
5.2 Create User Box....I-35
5.2.1 Public/Personal User Box....I-35
5.2.2 Bulletin Board User Box....I-36
5.2.3 Relay User Box....I-36
5.3 Limiting Access to Destinations....I-36
5.3.1 Apply Levels/Groups to Destinations....I-36
6. UTILITY (USER SETTINGS)....I-38
6.1 System Settings....I-38
6.1.1 Language Selection....I-38
6.1.2 Language Selection-Panel Keyboard Language Selection....I-38
6.1.3 Language Selection-External Keyboard Language Selection....I-38
6.1.4 Select Keyboard....I-38
6.1.5 Measurement Unit Settings....I-39
6.1.6 Paper Tray Settings....I-39
6.1.7 Auto Color Level Adjust....I-40
6.1.8 Power Supply/Power Save Settings....I-40
6.1.9 Output Settings....I-40
6.1.10 AE Level Adjustment....I-41
6.1.11 Auto Paper Select for Small Original....I-41
6.1.12 Blank Page Print Settings....I-41
6.1.13 Page Number Print Position....I-42
6.1.14 Blank Sheet Detection Level....I-42
6.1.15 Separate Scan from Platen....I-42
6.2 Custom Display Settings....I-42
6.2.1 Copier Settings....I-42
6.2.2 Scan/Fax Settings....I-43
6.2.3 User Box Settings....I-44
6.2.4 Function Display Key (Copy/Print)....I-44
6.2.5 Function Display Key (Send/Save)....I-45
6.2.6 Default Application Screen Type Setting....I-45
6.2.7 Copy Screen....I-45
6.2.8 Fax Active Screen....I-45
6.2.9 Animation Settings....I-46
6.2.10 Search Option Settings....I-46
6.3 Copier Settings....I-47
6.3.1 Auto Booklet Selection for Saddle Stitching....I-47
6.3.2 Auto Zoom for Combine/Booklet....I-47
6.3.3 Booklet Short Cut Mode....I-47
6.3.4 Auto Sort/Group Selection....I-47
6.3.5 Default Copy Settings....I-47
6.3.6 Default Enlarge Display Settings....I-48
6.3.7 When AMS Direction is Incorrect....I-48
6.3.8 Separate Scan Output Method....I-48
6.3.9 Enlargement Rotation....I-49
6.3.10 Auto Zoom (Platen)....I-49
6.3.11 Auto Zoom (ADF)....I-49
6.3.12 Specify Default Tray when APS Off....I-49
6.3.13 Select Tray for Insert Sheet....I-49
6.3.14 Tri-Fold Print Side....I-50
6.3.15 Print Jobs During Copy Operation....I-50

6.3.16 Automatic Image Rotation....I-50
6.3.17 Finishing Program....I-50
6.3.18 Card Shot Settings....I-51
6.4 Scan/Fax Settings....I-51
6.4.1 JPEG Compression Level....I-51
6.4.2 Black Compression Level....I-51
6.4.3 TWAIN Lock Time....I-52
6.4.4 Default Scan/Fax Settings....I-52
6.4.5 Default Enlarge Display Settings....I-52
6.4.6 Compact PDF/XPS Compression Level....I-52
6.4.7 Color TIFF Type....I-53
6.4.8 OCR Operation Setting....I-53
6.4.9 Graphic Outlining....I-53
6.4.10 Auto Rename Function....I-53
6.5 Printer Settings....I-54
6.5.1 Basic Settings....I-54
6.5.2 Paper Setting....I-56
6.5.3 PCL Settings....I-57
6.5.4 PS Setting....I-58
6.5.5 Security Settings....I-59
6.5.6 OOXML Print Settings....I-59
6.5.7 Layout - Combination....I-59
6.5.8 Print Reports....I-60
6.5.9 TIFF Image Paper Setting....I-60
6.6 Change Password....I-60
6.6.1 Use....I-60
6.6.2 Procedure....I-60
6.7 Change E-Mail Address....I-60
6.7.1 Use....I-61
6.7.2 Procedure....I-61
6.8 Register Authentication Settings....I-61
6.8.1 Use....I-61
6.9 Synchronize User Auth. and Account Track....I-61
6.9.1 Use....I-61
6.9.2 Default setting....I-61
6.9.3 Setting item....I-61
6.10 Cellular Phone/PDA Setting....I-61
6.10.1 Link File Error Notification....I-61
6.10.2 Proxy Server Use....I-61
6.10.3 Print....I-61
7. UTILITY (ADMINISTRATOR SETTINGS)....I-63
Administrator Settings-Outline....I-63
7.1 System Settings-Power Supply/Power Save Settings....I-63
7.1.1 Low Power Mode Settings....I-63
7.1.2 Sleep Mode Settings....I-63
7.1.3 Power Key Setting....I-63
7.1.4 Power Save Settings....I-64
7.1.5 Enter Power Save Mode....I-64
7.1.6 Power Consumption in Sleep Mode....I-64
7.1.7 Power Saving Fax/Scan....I-64
7.1.8 Awake from Power Save Mode by Touching Control Panel....I-64
7.2 System Settings-Output Settings....I-65
7.2.1 Print/Fax Output Settings....I-65
7.2.2 Output Tray Settings....I-65
7.2.3 Shift Output Each Job....I-65
7.3 System Settings-Date/Time Settings....I-65
7.3.1 Use....I-65
7.3.2 Procedure....I-65
7.4 System Settings-Daylight Saving Time....I-66
7.4.1 Enable Settings....I-66
7.4.2 Start/End Settings....I-66
7.5 System Settings-Weekly Timer Settings....I-66
7.5.1 Weekly Timer ON/OFF Settings....I-66
7.5.2 Time Settings....I-66
7.5.3 Date Settings....I-67
7.5.4 Select Time for Power Save....I-67
7.5.5 Password for Non-Business Hours....I-67
7.5.6 Tracking Function Settings....I-67
7.5.7 Display ON/OFF Time....I-67
7.6 System Settings-Restrict User Access....I-68

7.6.1 Restrict Program Function Setting....I-68
7.6.2 Copy Program Lock Settings....I-68
7.6.3 Delete Saved Copy Program....I-68
7.6.4 Restrict Access to Job Settings....I-68
7.6.5 Restrict Operation....I-70
7.7 System Settings-Expert Adjustment....I-70
7.7.1 AE Level Adjustment....I-70
7.7.2 Printer Adjustment-Leading Edge Adjustment....I-70
7.7.3 Printer Adjustment-Centering....I-71
7.7.4 Printer Adjustment-Leading Edge Adjustment (Duplex Side 2)....I-71
7.7.5 Printer Adjustment-Centering (Duplex 2nd Side)....I-72
7.7.6 Printer Adjustment-Erase Leading Edge....I-72
7.7.7 Printer Adjustment-Vertical Adjustment....I-73
7.7.8 Printer Adjustment-Media Adjustment....I-73
7.7.9 Finisher Adjustment-Center Staple Position....I-74
7.7.10 Finisher Adjustment-Half-Fold Position....I-75
7.7.11 Finisher Adjustment-1st Tri-Fold Position Adjustment/2nd Tri-Fold Position Adjustment....I-75
7.7.12 Finisher Adjustment-Punch Horizontal Position Adjustment....I-76
7.7.13 Finisher Adjustment-Paper Alignment Plate Settings....I-77
7.7.14 Finisher Adjustment-Punch Regist Loop Size Adjustment....I-77
7.7.15 Density Adjustment....I-77
7.7.16 Image Stabilization....I-78
7.7.17 Paper Separation Adjustment....I-78
7.7.18 Gradation Adjustment....I-78
7.7.19 Scanner Area....I-79
7.7.20 Scanner Area-Scanner Adjustment: Leading Edge....I-79
7.7.21 Scanner Area-Scanner Adjustment: Centering....I-80
7.7.22 Scanner Area-Horizontal Adjustment....I-80
7.7.23 Scanner Area-Vertical Adjustment....I-81
7.7.24 ADF Adjustment....I-81
7.7.25 Line Detection-Prior Detection Setting (Front Side, Back Side)....I-83
7.7.26 Line Detection-Feed Cleaning Settings....I-84
7.7.27 Trail Edge Adjust....I-84
7.7.28 User Paper Settings....I-84
7.7.29 Erase Adjustment-Non-Image Area Erase Operation Settings....I-85
7.7.30 PS Designer Settings....I-85
7.8 System Settings-List/Counter....I-86
7.8.1 Management List....I-86
7.8.2 Paper Size/Type Counter....I-86
7.8.3 Meter Counter List....I-86
7.8.4 Check Consumables List....I-86
7.8.5 Transmission Meter Count and Device Information....I-86
7.8.6 TX Operation Log Output....I-87
7.9 System Settings-Reset Settings....I-87
7.9.1 System Auto Reset....I-87
7.9.2 Auto Reset....I-87
7.9.3 Job Reset....I-87
7.10 System Settings-User Box Settings....I-89
7.10.1 Delete Unused User Box....I-89
7.10.2 Delete Secure Print Documents....I-89
7.10.3 Auto Delete Secure Document....I-89
7.10.4 Encrypted PDF Delete Time....I-89
7.10.5 ID & Print Delete Time....I-89
7.10.6 Document Hold Setting....I-90
7.10.7 External Memory Function Settings....I-90
7.10.8 Allow/Restrict User Box....I-90
7.10.9 ID & Print Delete after Print Setting....I-90
7.10.10 Document Delete Time Setting....I-91
7.10.11 Document in MFP Shared Folder Delete Time Setting....I-91
7.11 System Settings-Standard Size Setting....I-91
7.11.1 Original Glass Original Size Detect....I-91
7.11.2 81/2 × 14/Foolscap Size Detection....I-91
7.11.3 Foolscap Size Setting....I-91
7.11.4 ADF Size Detection....I-92
7.12 System Settings-Stamp Settings....I-92
7.12.1 Header/Footer Settings....I-92
7.12.2 Fax TX Settings....I-92
7.13 System Settings-Blank Page Print Settings....I-92
7.13.1 Use....I-92
7.13.2 Default setting....I-92

7.13.3 Setting item....I-92
7.14 System Settings-Registered Key Settings....I-92
7.14.1 Use....I-92
7.14.2 Procedure....I-93
7.15 System Settings-Job Priority Operation Settings....I-93
7.15.1 Fax RX Job Priority....I-93
7.15.2 Skip Job (Fax)....I-93
7.15.3 Skip Job (Copy, Print)....I-93
7.16 System Settings-Default Bypass Paper Type Setting....I-93
7.16.1 Use....I-93
7.16.2 Procedure....I-93
7.17 System Settings-Page Number Print Position....I-93
7.17.1 Use....I-93
7.17.2 Procedure....I-93
7.18 System Settings-Preview Settings....I-94
7.18.1 Original Direction Confirmation Screen....I-94
7.18.2 Realtime Preview....I-94
7.18.3 Preview Display Conditions (Standard Application)....I-94
7.18.4 Preview Display Conditions (Registered Application)....I-94
7.19 System Settings-Enlarge Display Settings....I-94
7.19.1 Display Default Setting....I-94
7.19.2 Apply Basic Setting to Enlarge Display....I-95
7.20 System Settings-Scan File Name Settings....I-95
7.20.1 Function Mode Initial....I-95
7.20.2 Supplementary File Name....I-95
7.21 System Settings-PDF Settings....I-95
PDF Settings....I-95
7.21.1 PDF/A Default Settings....I-95
7.21.2 PDF Web Optimization Default Settings....I-96
7.21.3 Searchable PDF Settings....I-96
7.22 System Settings-Set Paper Name by User....I-96
7.22.1 Set Paper Name by User....I-96
7.23 System Settings-Custom Display Settings....I-96
7.23.1 Main Menu Default Settings....I-96
7.23.2 Main Menu Display Settings....I-96
7.23.3 Custom Function Pattern Selection....I-97
7.23.4 User/Admin Function Permissions....I-97
7.23.5 Function Display Key Permission Setting-Copy/Print....I-97
7.23.6 Function Display Key Permission Setting-Send/Save....I-97
7.23.7 Temporary Change Language Setting....I-98
7.23.8 Display 10 Keypad when entering Number of Sets....I-98
7.24 Administrator/Machine Settings....I-98
7.24.1 Administrator Registration....I-98
7.24.2 Input Machine Address....I-98
7.25 One-Touch/User Box Registration-Create One-Touch Destination....I-98
7.25.1 Address Book (Public)/(Personal)....I-98
7.25.2 Group....I-100
7.25.3 E-Mail Settings....I-100
7.26 One-Touch/User Box Registration-Create User Box....I-100
7.26.1 Public/Personal User Box....I-100
7.26.2 Bulletin Board User Box....I-100
7.26.3 Relay User Box....I-100
7.26.4 Annotation User Box....I-101
7.27 One-Touch/User Box Registration-One-Touch/User Box Registration List....I-101
7.27.1 Address Book List....I-101
7.27.2 Group List....I-101
7.27.3 Program List....I-101
7.27.4 E-Mail Subject/Text List....I-101
7.28 One-Touch/User Box Registration-Maximum Number of User Boxes....I-101
7.28.1 Use....I-101
7.28.2 Procedure....I-101
7.29 User Authentication/Account Track-General Settings....I-101
7.29.1 User Authentication....I-102
7.29.2 Public User Access....I-103
7.29.3 Prohibited Function Login Setting....I-103
7.29.4 Account Track....I-104
7.29.5 Account Track Input Method....I-104
7.29.6 Synchronize User Authentication & Account Track....I-104
7.29.7 When # of Jobs Reach Maximum....I-104
7.29.8 Number of User Counters Assigned....I-104

7.29.9 Ticket Hold Time Setting....I-105
7.29.10 LDAP-IC Card Authentication Setting....I-105
7.30 User Authentication/Account Track-User Authentication Settings....I-108
7.30.1 Administrative Settings....I-108
7.30.2 User Registration....I-109
7.30.3 User Counter....I-109
7.31 User Authentication/Account Track-Account Track Settings....I-109
7.31.1 Account Track Registration....I-109
7.31.2 Account Track Counter....I-109
7.32 User Authentication/Account Track-Print without Authentication....I-110
7.32.1 Use....I-110
7.32.2 Default setting....I-110
7.32.3 Setting item....I-110
7.33 User Authentication/Account Track-Print Counter List....I-110
7.33.1 Use....I-110
7.33.2 Procedure....I-110
7.34 User Authentication/Account Track-External Server Settings....I-110
7.34.1 External Server Settings....I-110
7.35 User Authentication/Account Track-Limiting Access to Destinations....I-110
7.35.1 Create Group....I-110
7.35.2 Apply Levels/Groups to Destinations....I-111
7.35.3 Apply Levels/Groups to Users....I-111
7.36 User Authentication/Account Track-Authentication Device Settings....I-111
7.36.1 General Settings....I-111
7.36.2 Logoff Settings....I-112
7.37 User Authentication/Account Track-User/Account Common Setting....I-112
7.37.1 Logout Confirmation Screen Display Setting....I-112
7.37.2 Counter Remote Control....I-112
7.38 User Authentication/Account Track-Scan to Home Settings....I-112
7.38.1 Use....I-112
7.38.2 Default setting....I-112
7.38.3 Setting item....I-112
7.39 User Authentication/Account Track-Scan to Authorized Folder Settings....I-113
7.39.1 Use....I-113
7.39.2 Default setting....I-113
7.39.3 Setting item....I-113
7.40 User Authentication/Account Track-Print Simple Auth....I-113
7.40.1 Authentication Setting....I-113
7.40.2 Register Authentication Server....I-113
7.41 User Authentication/Account Track - Max. Allowance when Enhanced Server down....I-115
7.41.1 Use....I-115
7.41.2 Default setting....I-115
7.41.3 Setting item....I-115
7.42 User Authentication/Account Track - Update Billing Information....I-116
7.42.1 Use....I-116
7.42.2 Default setting....I-116
7.42.3 Setting item....I-116
7.43 Network Settings-TCP/IP Settings....I-116
7.43.1 TCP/IP Settings....I-116
7.43.2 IPv4 Settings....I-116
7.43.3 IPv6 Settings....I-116
7.43.4 DNS Host....I-117
7.43.5 DNS Domain....I-117
7.43.6 DNS Server Settings (IPv4)....I-118
7.43.7 DNS Server Settings (IPv6)....I-118
7.43.8 IPsec Settings....I-118
7.43.9 IPsec Settings-IKE Settings-IKEv1 Settings....I-118
7.43.10 IPsec Settings-IKE Settings-IKEv2 Settings....I-119
7.43.11 IPsec Settings-IPsec Settings-IPsec SA Settings....I-120
7.43.12 IPsec Settings-IPsec Settings-Peer....I-121
7.43.13 IPsec Settings-IPsec Settings-Protocol Setting....I-122
7.43.14 IPsec Settings-Enable IPsec....I-123
7.43.15 IPsec Settings-Communication Check....I-124
7.43.16 IP Filtering (Permit Access)....I-124
7.43.17 IP Filtering (Deny Access)....I-124
7.43.18 RAW Port Number....I-124
7.43.19 LLMNR Setting....I-124
7.44 Network Settings-NetWare Settings....I-125
7.44.1 IPX Settings....I-125
7.44.2 NetWare Print Settings....I-125

7.44.3 PServer Settings: Print Server Name/Print Server Password....I-126
7.44.4 PServer Settings: Polling Interval....I-126
7.44.5 PServer Settings: NDS/Bindery Setting....I-126
7.44.6 PServer Settings: File Server Name....I-126
7.44.7 PServer Settings: NDS Context Name....I-126
7.44.8 PServer Settings: NDS Tree Name....I-126
7.44.9 Nprinter/Rprinter Settings: Print Server Name....I-126
7.44.10 Nprinter/Rprinter Settings: Printer Number....I-126
7.44.11 User Authentication Setting (NDS)....I-127
7.45 Network Settings-HTTP Server Settings....I-127
7.45.1 HTTP Server Settings....I-127
7.45.2 PSWC Settings....I-127
7.45.3 IPP Settings....I-127
7.45.4 Accept IPP Jobs....I-127
7.45.5 Support Information....I-128
7.45.6 Printer Information....I-128
7.45.7 IPP Authentication Settings....I-128
7.45.8 General Settings....I-128
7.45.9 User Name....I-128
7.45.10 Password....I-128
7.45.11 realm....I-128
7.46 Network Settings-FTP Settings....I-129
7.46.1 FTP TX Settings....I-129
7.46.2 FTP TX Settings: Proxy Server Address....I-129
7.46.3 FTP TX Settings: Proxy Server Port Number....I-129
7.46.4 FTP TX Settings: Port No....I-129
7.46.5 FTP TX Settings: Connection Timeout....I-129
7.46.6 FTP Server Settings....I-129
7.46.7 FTP Server Settings-Deny Reception Command....I-130
7.46.8 FTP Server Settings-PORT Command Enhanced Security....I-130
7.47 Network Settings-SMB Settings....I-130
SMB Setting....I-130
7.47.1 Client Settings....I-130
7.47.2 SMB Server Settings....I-131
7.47.3 WINS/NetBIOS Settings....I-132
7.47.4 WINS/NetBIOS Settings: Automatic Retrieval Settings....I-132
7.47.5 WINS/NetBIOS Settings: WINS Server Address1, 2....I-133
7.47.6 WINS/NetBIOS Settings: Node Type Setting....I-133
7.47.7 Direct Hosting Setting....I-133
7.48 Network Settings-LDAP Settings....I-133
7.48.1 Enabling LDAP....I-133
7.48.2 Setting Up LDAP....I-133
7.48.3 Setting Up LDAP-LDAP Server Name....I-133
7.48.4 Setting Up LDAP-Max. Search Results....I-134
7.48.5 Setting Up LDAP-Timeout....I-134
7.48.6 Setting Up LDAP-Initial Setting for Search Details....I-134
7.48.7 Setting Up LDAP-Change Search Attribute....I-134
7.48.8 Setting Up LDAP-Search....I-134
7.48.9 Setting Up LDAP-Check Connection....I-134
7.48.10 Setting Up LDAP-Reset All Settings....I-135
7.48.11 Setting Up LDAP-Server Address....I-135
7.48.12 Setting Up LDAP-Search Base....I-135
7.48.13 Setting Up LDAP-SSL Setting....I-135
7.48.14 Setting Up LDAP-Port Number....I-135
7.48.15 Setting Up LDAP-Port Number (SSL)....I-135
7.48.16 Setting Up LDAP-Certificate Verification Level Settings....I-135
7.48.17 Setting Up LDAP-Authentication Type....I-136
7.48.18 Setting Up LDAP-Select Server Authentication Method....I-136
7.48.19 Setting Up LDAP-Referral Setting....I-136
7.48.20 Setting Up LDAP-Login Name....I-136
7.48.21 Setting Up LDAP-Password....I-137
7.48.22 Setting Up LDAP-Domain Name....I-137
7.48.23 Setting Up LDAP-Search Attributes Authentication....I-137
7.48.24 Setting Up LDAP-Search Attribute(s)....I-137
7.48.25 Default LDAP Server Setting....I-137
7.48.26 Default Search Result Display Setting....I-137
7.49 Network Settings-E-Mail Settings-E-Mail TX (SMTP)....I-137
7.49.1 E-Mail TX (SMTP)....I-138
7.49.2 Scan to E-mail....I-138
7.49.3 Status Notification....I-138

7.49.4 Total Counter Notification....I-138
7.49.5 SMTP Server Address....I-138
7.49.6 Binary Division....I-138
7.49.7 Divided Mail Size....I-139
7.49.8 Connection Timeout....I-139
7.49.9 Server Capacity....I-139
7.49.10 SSL/TLS Settings....I-139
7.49.11 Port No....I-139
7.49.12 Port Number (SSL)....I-139
7.49.13 Certificate Verification Level Settings....I-140
7.49.14 Detail Settings: SMTP Authentication....I-140
7.49.15 Detail Settings: POP Before SMTP Authentication....I-140
7.49.16 Detail Settings: POP Before SMTP Time....I-140
7.50 Network Settings-E-Mail Settings-E-Mail RX (POP)....I-140
7.50.1 E-Mail RX (POP)....I-140
7.50.2 POP Server Address....I-141
7.50.3 Connection Timeout....I-141
7.50.4 SSL Setting....I-141
7.50.5 Port No....I-141
7.50.6 Port Number (SSL)....I-141
7.50.7 Certificate Verification Level Settings....I-141
7.50.8 Login Name....I-142
7.50.9 Password....I-142
7.50.10 APOP Authentication....I-142
7.50.11 Check for New Messages....I-142
7.50.12 Polling Interval....I-142
7.51 Network Settings-E-Mail Settings-E-Mail RX Print....I-142
7.51.1 E-mail RX Print....I-142
7.51.2 E-mail RX Permission....I-143
7.51.3 Save in User Box....I-143
7.51.4 E-Mail Body Print....I-143
7.52 Network Settings-E-Mail Settings-S/MIME Communication Settings....I-143
7.52.1 S/MIME Communication Settings....I-143
7.52.2 Digital Signature....I-143
7.52.3 E-Mail Text Encryption Method....I-144
7.52.4 Print S/MIME Information....I-144
7.52.5 Automatically Obtain Certificates....I-144
7.52.6 Certificate Verification Level Settings....I-144
7.52.7 Digital Signature Type....I-144
7.53 Network Settings-SNMP Settings....I-145
7.53.1 SNMP Settings....I-145
7.53.2 UDP Port Number....I-145
7.53.3 SNMP v1/v2c Settings....I-145
7.53.4 SNMP v3 Settings....I-146
7.53.5 TRAP Setting....I-148
7.53.6 TRAP Setting When Authentication Failed....I-148
7.54 Network Settings-AppleTalk Settings....I-148
7.54.1 AppleTalk Settings....I-148
7.54.2 Printer Name....I-148
7.54.3 Zone Name....I-148
7.54.4 Current Zone....I-149
7.55 Network Settings-Bonjour Setting....I-149
7.55.1 Bonjour Setting....I-149
7.55.2 Bonjour Name....I-149
7.56 Network Settings-TCP Socket Settings....I-149
7.56.1 TCP Socket....I-149
7.56.2 TCP Socket (ASCII Mode)....I-150
7.57 Network Settings-Network Fax Settings....I-150
7.57.1 Network Fax Function Settings....I-150
7.57.2 SMTP TX Settings....I-150
7.57.3 SMTP RX Settings....I-151
7.58 Network Settings-WebDAV Settings-WebDAV Client Settings....I-151
7.58.1 WebDAV Client Setting....I-151
7.58.2 Proxy Server Address....I-151
7.58.3 Proxy Server Port Number....I-151
7.58.4 User Name....I-151
7.58.5 Password....I-152
7.58.6 Chunk Transmission....I-152
7.58.7 Connection Timeout....I-152
7.58.8 Server Auth. Character Code....I-152

7.58.9 Certificate Verification Level Settings....I-152
7.59 Network Settings-WebDAV Settings-WebDAV Server Settings....I-152
7.59.1 WebDAV Server Settings....I-152
7.59.2 SSL Setting....I-153
7.59.3 Password Setting....I-153
7.60 Network Settings-WebDAV Settings-Proxy Setting for Remote Access....I-153
7.60.1 Proxy Setting for Remote Access....I-153
7.61 Network Settings-DPWS Settings-DPWS Common Settings....I-153
7.61.1 Friendly Name....I-153
7.61.2 Publication Service....I-153
7.61.3 Enable SSL....I-154
7.61.4 Certificate Verification Level Settings....I-154
7.62 Network Settings-DPWS Settings-DPWS Extension Settings....I-154
DPWS Extension Settings....I-154
7.62.1 Enable Proxy....I-154
7.62.2 Register Proxy....I-154
7.63 Network Settings-DPWS Settings-Printer Settings....I-155
7.63.1 Printer Settings....I-155
7.63.2 Printer Name....I-155
7.63.3 Printer Location....I-155
7.63.4 Printer Information....I-155
7.64 Network Settings-DPWS Settings-Scanner Settings....I-155
7.64.1 Scanner Settings....I-155
7.64.2 Scanner Name....I-156
7.64.3 Scanner Location....I-156
7.64.4 Scanner Information....I-156
7.64.5 Connection Timeout....I-156
7.65 Network Settings-Distributed Scan Settings....I-156
7.65.1 Distributed Scan Settings....I-156
7.66 Network Settings-ThinPrint Setting....I-156
7.66.1 ThinPrint Setting....I-156
7.66.2 Port Number....I-157
7.66.3 Data Size before Compression....I-157
7.66.4 Connection Timeout....I-157
7.66.5 Printer Name/Printer Class Name....I-157
7.66.6 Certificate Verification Level Settings....I-157
7.66.7 Connection Service Setting....I-157
7.66.8 Checking Connection Service Setting....I-158
7.67 Network Settings-Detail Settings-Device Setting....I-158
7.67.1 MAC Address....I-158
7.67.2 Network Speed....I-158
7.67.3 LLTD Setting....I-158
7.68 Network Settings-Detail Settings-Time Adjustment Setting....I-158
7.68.1 Time Adjustment Setting....I-158
7.68.2 Auto IPv6 Retrieval....I-158
7.68.3 NTP Server Setting....I-159
7.68.4 Auto Time Adjustment....I-159
7.68.5 Polling Interval....I-159
7.69 Network Settings-Detail Settings-Status Notification Setting....I-159
7.69.1 Register Notification Address (IP Address)....I-159
7.69.2 Register Notification Address (IPX Address)....I-159
7.69.3 Register Notification Address (E-mail Address)....I-160
7.70 Network Settings-Detail Settings-Total Counter Notification Settings....I-160
7.70.1 Notification Schedule Setting....I-160
7.70.2 Notification Address Setting....I-160
7.70.3 Model Name....I-160
7.70.4 Send Now....I-160
7.71 Network Settings-Detail Settings-PING Confirmation....I-160
7.71.1 Use....I-160
7.71.2 Procedure....I-160
7.72 Network Settings-Detail Settings-SLP Setting....I-160
7.72.1 Use....I-160
7.72.2 Default setting....I-161
7.72.3 Setting item....I-161
7.73 Network Settings-Detail Settings-LPD Setting....I-161
7.73.1 Use....I-161
7.73.2 Default setting....I-161
7.73.3 Setting item....I-161
7.74 Network Settings-Detail Settings-Prefix/Suffix Setting....I-161
7.74.1 ON/OFF Setting....I-161

7.74.2 Prefix/Suffix Setting....I-161
7.75 Network Settings-Detail Settings-Error Code Display Setting....I-161
7.75.1 Use....I-161
7.75.2 Default setting....I-161
7.75.3 Setting item....I-161
7.76 Network Settings-IEEE802.1X Authentication Settings....I-161
7.76.1 IEEE802.1X Authentication Settings....I-161
7.76.2 Auth. Status....I-162
7.76.3 Reset Job Settings....I-162
7.76.4 Certificate Verification Level Settings....I-162
7.77 Network Settings-Web Browser Setting....I-162
7.77.1 Use....I-162
7.77.2 Default setting....I-162
7.77.3 Setting item....I-162
7.78 Network Settings-Bluetooth Setting....I-162
7.78.1 Use....I-162
7.78.2 Default setting....I-162
7.78.3 Setting item....I-162
7.79 Network Settings-Single Sign-On Setting....I-162
Single Sign-On Setting....I-162
7.79.1 Domain Login Setting....I-162
7.79.2 Applications and Settings....I-163
7.79.3 Auto Log Out Time....I-163
7.80 Network Settings-Extended Network Settings....I-163
7.80.1 Extended Network Settings....I-163
7.80.2 Operating Mode....I-163
7.80.3 Awake from ErP....I-163
7.80.4 Wireless LAN Adapter....I-164
7.80.5 Device Setting....I-164
7.81 Network Settings-IWS Settings....I-164
7.81.1 IWS Settings....I-164
7.82 Network Settings-Remote Panel Settings....I-164
Remote Panel Settings....I-164
7.82.1 Server Settings....I-165
7.82.2 Client Settings....I-165
7.83 Network Settings-Machine Update Settings....I-166
7.83.1 Internet ISW Settings....I-166
7.83.2 Machine Auto Update setting....I-166
7.83.3 HTTP Proxy Settings....I-169
7.84 Network Settings-Tablet Settings....I-169
7.84.1 Use....I-169
7.84.2 Default setting....I-169
7.84.3 Setting item....I-169
7.85 Copier Settings....I-170
7.85.1 Auto Zoom (Platen)....I-170
7.85.2 Auto Zoom (ADF)....I-170
7.85.3 Specify Default Tray when APS Off....I-170
7.85.4 Print Jobs During Copy Operation....I-170
7.85.5 Tri-Fold Print Side....I-170
7.85.6 Automatic Image Rotation....I-171
7.86 Printer Settings....I-171
7.86.1 USB Timeout....I-171
7.86.2 Network Timeout....I-171
7.86.3 Print XPS/OOXML Errors....I-171
7.86.4 Assign Account to Acquire Device Info....I-171
7.87 Fax Settings....I-172
7.87.1 Header Information....I-172
7.87.2 Header/Footer Position....I-172
7.87.3 Line Parameter Setting....I-173
7.87.4 TX/RX Settings....I-175
7.87.5 Function Settings-Function ON/OFF Setting....I-177
7.87.6 Function Settings-Memory RX Setting....I-179
7.87.7 Function Settings-Closed Network RX....I-179
7.87.8 Function Settings-Forward TX Setting....I-179
7.87.9 Function Settings-Incomplete TX Hold....I-180
7.87.10 Function Settings-PC-Fax Permission Setting....I-181
7.87.11 Function Settings-PC-Fax RX Setting....I-181
7.87.12 Function Settings-TSI User Box Setting....I-181
7.87.13 Function Settings-TSI All File Type Settings....I-182
7.87.14 Function Settings-TX-Line Auto Switch Setting....I-183

7.87.15 PBX Connection Setting....I-183
7.87.16 Report Settings....I-183
7.87.17 Job Settings List....I-187
7.87.18 Multi Line Settings-PC-FAX TX Line Setting....I-187
7.87.19 Multi Line Settings-Fax Line 2 to 4-Line Parameter Setting....I-187
7.87.20 Multi Line Settings-Fax Line 2 to 4-Function Settings....I-188
7.87.21 Multi Line Settings-Fax Line 2 to 4-Multi Line Settings....I-188
7.87.22 Multi Line Settings-Fax Line 2 to 4-Sender Fax No....I-188
7.87.23 Network Fax Settings-Internet Fax Self Rx Ability....I-188
7.87.24 Network Fax Settings-Internet Fax Advanced Settings....I-189
7.87.25 Network Fax Settings-IP Address Fax Operation Settings....I-190
7.87.26 Fax Print Quality Settings....I-190
7.88 System Connection....I-191
7.88.1 OpenAPI Settings-Access Setting....I-191
7.88.2 OpenAPI Settings-SSL/Port Settings....I-191
7.88.3 OpenAPI Settings-Authentication....I-191
7.88.4 OpenAPI Settings-External Application Connection....I-192
7.88.5 OpenAPI Settings-Proxy Settings....I-192
7.88.6 OpenAPI Settings-Specified Application Start Setting....I-192
7.88.7 Call Remote Center....I-193
7.88.8 Prefix/Suffix Automatic Setting....I-193
7.88.9 Printer Information....I-193
7.88.10 Cellular Phone/PDA Setting....I-193
7.89 Security Settings-Administrator Password....I-194
7.89.1 Use....I-194
7.89.2 Procedure....I-194
7.90 Security Settings-User Box Administrator Setting....I-194
7.90.1 Use....I-194
7.90.2 Default setting....I-194
7.90.3 Setting item....I-194
7.91 Security Settings-Administrator Security Levels....I-194
7.91.1 Use....I-194
7.91.2 Default setting....I-194
7.91.3 Setting item....I-194
7.92 Security Settings-Security Details....I-194
7.92.1 Password Rules....I-194
7.92.2 Prohibited Functions When Authentication Error....I-195
7.92.3 Confidential Document Access Method....I-196
7.92.4 Manual Destination Input....I-196
7.92.5 Print Data Capture....I-196
7.92.6 Job Log Settings....I-196
7.92.7 Restrict Fax TX....I-197
7.92.8 Personal Data Security Settings....I-197
7.92.9 Hide Personal Information (MIB)....I-198
7.92.10 Display Activity Log....I-198
7.92.11 Initialize....I-198
7.92.12 Secure Print Only....I-198
7.92.13 Copy Guard....I-198
7.92.14 Password Copy....I-199
7.92.15 Web browser contents access....I-199
7.92.16 TX Operation Log....I-199
7.92.17 Hardware Encryption....I-199
7.92.18 Export Debug Log....I-199
7.92.19 Write the Configuration from USB....I-200
7.92.20 HDD backup data Settings....I-200
7.93 Security Settings-Enhanced Security Mode....I-200
7.93.1 Use....I-200
7.93.2 Default setting....I-200
7.93.3 Setting item....I-200
7.94 Security Settings-HDD Settings....I-202
7.94.1 Check HDD Capacity....I-202
7.94.2 Overwrite HDD Data....I-202
7.94.3 Overwrite All Data....I-203
7.94.4 HDD Lock Password....I-203
7.94.5 Format HDD....I-204
7.94.6 HDD Encryption Setting....I-204
7.94.7 Debug Log Encryption Settings....I-204
7.95 Security Settings-Function Management Settings....I-204
7.95.1 Usage Settings for Each Function....I-204
7.95.2 Maximum Job Allowance....I-205

7.95.3 Network Function Usage Settings....I-205
7.96 Security Settings-Stamp Settings....I-205
7.96.1 Apply Stamps....I-205
7.96.2 Delete Registered Stamp....I-205
7.97 Security Settings-Image Log Transfer Settings....I-206
7.97.1 Image Log Transfer Settings....I-206
7.97.2 Image Log Transfer Settings (Type1)....I-206
7.97.3 Image Log Transfer Settings (Type2)....I-206
7.98 Security Settings-Driver Password Encryption Setting....I-206
7.98.1 Use....I-206
7.98.2 Default setting....I-207
7.98.3 Setting item....I-207
7.99 Security Settings-FIPS Settings....I-207
7.99.1 FIPS Settings....I-207
7.100 License Settings....I-207
7.100.1 Get Request Code....I-207
7.100.2 Install License....I-207
7.100.3 List of Enabled Functions....I-208
7.101 Voice Guidance Settings-Voice Guidance....I-208
7.101.1 Use....I-208
7.101.2 Default setting....I-208
7.101.3 Setting item....I-208
7.102 OpenAPI Certification Management Setting....I-208
7.102.1 Restriction Code Settings....I-208
7.103 External Memory Backup....I-208
7.103.1 Import/Export....I-208
7.104 Remote Access Setting....I-208
7.104.1 Import/Export User Data....I-208
8. UTILITY (OTHER SETTINGS)....I-209
8.1 Banner Printing....I-209
8.1.1 Use....I-209
8.1.2 Procedure....I-209
8.2 My Panel Settings....I-209
8.2.1 Use....I-209
8.2.2 Procedure....I-209
8.3 Device Information....I-209
8.3.1 Use....I-209
8.3.2 Procedure....I-209
8.4 Remote Panel Operation....I-209
8.4.1 Use....I-209
9. ADJUSTMENT ITEM LIST....I-210
9.1 Replace feed roller, pick-up roller, separation roller (tray 1, tray 2)....I-210
9.2 Replace feed roller, separation roller assy (manual bypass tray)....I-210
9.3 Install LCT (Built-in)....I-210
9.4 Replace CCD unit....I-210
9.5 Replace developing unit....I-210
9.6 Replace drum unit....I-210
9.7 Replace transfer belt unit....I-210
9.8 Replace PH unit....I-210
9.9 Replace original size detection sensor....I-210
9.10 Replace scanner motor....I-211
9.11 Replace scanner home sensor....I-211
9.12 Replace printer control board....I-211
9.13 Replace MFP board....I-211
9.14 Replace SSD board....I-211
9.15 Replace original glass....I-211
9.16 Replace hard disk....I-211
9.17 Replace control panel unit....I-211
9.18 Replace DF control board (DF-701/DF-624)....I-211
9.19 Add key counter....I-212
9.20 Execute initialize....I-212
9.21 Add an optional device....I-212
9.22 Execute F/W update....I-212
9.23 Add fax board....I-212
9.24 Mount DF-624....I-212
9.25 Mount DF-701....I-212
9.26 Replace CIS module....I-212
10. LIST OF SERVICE MODE....I-214
10.1 List of service mode (outline)....I-214
10.2 List of service mode (detail)....I-215

10.2.1 Machine....I-215
10.2.2 Imaging Process Adjustment....I-216
10.2.3 CS Remote Care....I-216
10.2.4 System 1....I-218
10.2.5 System 2....I-219
10.2.6 Counter....I-220
10.2.7 List Output....I-221
10.2.8 State Confirmation....I-222
10.2.9 Test Mode....I-223
10.2.10 ADF....I-223
10.2.11 FAX....I-224
10.2.12 Finisher....I-225
10.2.13 Network Settings....I-226
10.2.14 Machine Update Setting....I-226
11. SERVICE MODE....I-228
11.1 Starting/Setting/Exiting....I-228
11.1.1 Starting procedure....I-228
11.1.2 Setting procedure....I-228
11.1.3 Exiting procedure....I-229
11.2 Date/Time Input mode....I-229
11.2.1 Use....I-229
11.2.2 Procedure....I-229
11.3 Machine....I-230
11.3.1 Trail Edge Color Alignment Adj....I-230
11.3.2 Fusing Temperature....I-231
11.3.3 Fusing Transport Speed....I-231
11.3.4 Heater Control Level....I-232
11.3.5 Printer Area....I-232
11.3.6 Scan Area....I-235
11.3.7 Printer Reg. Loop Adj....I-238
11.3.8 Color Registration Adjustment....I-238
11.3.9 Print Head Skew Adj....I-238
11.3.10 LD adjustment....I-238
11.3.11 Manual Bypass Tray Width Adj....I-239
11.3.12 Lead Edge Erase Adjustment....I-239
11.3.13 Non-Image Area Erase Check....I-240
11.3.14 ADF Scan Glass Contamination....I-240
11.3.15 Exhaust Fan Stop Delay....I-240
11.3.16 PPM Control Choice....I-241
11.4 Firmware Version....I-241
11.4.1 Use....I-241
11.4.2 Procedure....I-241
11.5 Imaging Process Adjustment....I-241
11.5.1 Gradation Adjust....I-241
11.5.2 Max Image Density Adj....I-243
11.5.3 TCR Level Setting....I-243
11.5.4 Image Background Adj....I-243
11.5.5 Transfer Voltage Fine Adj....I-244
11.5.6 Stabilizer....I-245
11.5.7 Thick Paper Density Adjustment....I-245
11.5.8 Paper separation adjustment....I-245
11.5.9 Manual Toner Add....I-246
11.5.10 Monochrome Density Adjustment....I-246
11.5.11 Grad/Dev AC Bias V Selection....I-246
11.5.12 Removable Voltage Adjust....I-247
11.6 CS Remote Care (Outlines)....I-247
11.7 Setting up the CS Remote Care....I-248
11.7.1 Using the telephone line modem....I-248
11.7.2 Using the Fax line modem....I-249
11.7.3 Using E-mail....I-249
11.7.4 When using a WebDAV server in http communication....I-250
11.8 Software SW setting for CS Remote Care....I-252
11.8.1 Input procedure....I-252
11.8.2 List of software SW for CS Remote Care....I-252
11.8.3 SW No. 01....I-253
11.8.4 SW No. 02....I-253
11.8.5 SW No. 03....I-254
11.8.6 SW No. 04....I-254
11.8.7 SW No. 05....I-255
11.8.8 SW No. 06....I-255

11.8.9 SW No. 07....I-255
11.8.10 SW No. 08....I-256
11.8.11 SW No. 09....I-256
11.8.12 SW No. 10....I-256
11.8.13 SW No. 11....I-257
11.8.14 SW No. 12....I-257
11.8.15 SW No. 14....I-257
11.8.16 SW No. 15....I-257
11.8.17 SW No. 18....I-258
11.8.18 SW No. 21....I-258
11.8.19 SW No. 22....I-259
11.8.20 SW No. 23....I-259
11.9 Setup confirmation....I-259
11.10 Calling the maintenance....I-259
11.10.1 When starting the maintenance....I-259
11.10.2 When finishing the maintenance....I-260
11.11 Calling the center from the administrator....I-260
11.12 Checking the transmission log....I-260
11.13 Detail on settings for CS Remote Care....I-260
11.13.1 Maintenance/Default Settings - System Selection....I-260
11.13.2 Maintenance/Default Settings - ID Code....I-260
11.13.3 Maintenance/Default Settings - Detail Setting....I-260
11.13.4 Maintenance/Default Settings - Server Setting (E-Mail1 or E-mail2 is selected.)....I-263
11.13.5 Maintenance/Default Settings - Server Setting (http1 or http2 is selected)....I-265
11.13.6 Product Auth. Settings....I-266
11.13.7 Import/Export Settings....I-266
11.14 System 1....I-267
11.14.1 Marketing Area....I-267
11.14.2 Tel/Fax Number....I-269
11.14.3 Serial Number....I-269
11.14.4 Sleep ON/OFF Choice Setting....I-269
11.14.5 Foolscap Size Setting....I-269
11.14.6 Original Size Detection....I-270
11.14.7 Install Date....I-270
11.14.8 Initialization-Clear All Data....I-270
11.14.9 Initialization-Clear Individual Data....I-271
11.14.10 Initialization-System Error Clear....I-272
11.14.11 Problem Unit Isolation Set....I-272
11.14.12 Post card transfer table....I-272
11.14.13 Warmup....I-273
11.14.14 Machine State LED Setting....I-274
11.14.15 TP Level....I-274
11.15 System 2....I-275
11.15.1 HDD....I-275
11.15.2 Image Controller Setting....I-275
11.15.3 Option Board Status....I-276
11.15.4 Consumable Life Reminder....I-276
11.15.5 Unit Change....I-277
11.15.6 Software Switch Setting....I-277
11.15.7 CCD Calibration....I-280
11.15.8 LCT (Built-in) Size Settings....I-281
11.15.9 LCT Paper Size Setting....I-281
11.15.10 Paper Reuse Box Setting....I-281
11.15.11 Line Mag Setting....I-281
11.15.12 Data Capture....I-281
11.15.13 ADF Scan Glass Contamin. Set....I-283
11.15.14 Stamp....I-284
11.15.15 Network Fax Settings....I-284
11.15.16 RX File Change Page Name....I-285
11.15.17 ADF Settings....I-285
11.15.18 Image Stabilization Setting....I-285
11.15.19 User Paper Settings....I-285
11.15.20 Coverage Rate Screen....I-286
11.15.21 JAM Code Display Setting....I-286
11.15.22 BootUp Screen....I-286
11.15.23 Install Data....I-287
11.15.24 Bluetooth Settings....I-287
11.15.25 CIS Image Adjustment....I-287
11.15.26 Display Eco Index....I-288
11.15.27 Internal Error. Auto Cancel....I-288

11.15.28 Acquiring Settings....I-288
11.15.29 Driver Install....I-288
11.15.30 Application Change Setting....I-289
11.15.31 Custom Pattern....I-289
11.16 Counter....I-290
11.16.1 Common procedure....I-290
11.16.2 Life....I-290
11.16.3 Service Call....I-291
11.16.4 Section Service Call....I-292
11.16.5 Warning....I-292
11.16.6 Maintenance....I-292
11.16.7 Service Total....I-292
11.16.8 Counter of Each Mode....I-292
11.16.9 Service Call History (Data)....I-293
11.16.10 ADF Paper Pages....I-293
11.16.11 Paper Jam History....I-293
11.16.12 Fax Connection Error....I-293
11.16.13 ADF Scan Glass Contamin. Counter....I-293
11.16.14 Parts Counter (Fixed)....I-293
11.16.15 Jam....I-294
11.16.16 Section JAM....I-294
11.16.17 Instantaneous Power Failure....I-294
11.16.18 Detail code history....I-295
11.17 List Output....I-295
11.17.1 Batch list CSV output....I-295
11.17.2 Machine Management List....I-295
11.17.3 Adjustments List....I-296
11.17.4 Parameter List....I-296
11.17.5 Service Parameter....I-296
11.17.6 Protocol Trace....I-296
11.17.7 Fax Setting List....I-296
11.17.8 Fax Analysis List....I-296
11.18 State Confirmation....I-297
11.18.1 Sensor Check....I-297
11.18.2 Table Number....I-304
11.18.3 Level History 1....I-305
11.18.4 Level History 2....I-305
11.18.5 Temp. & Humidity....I-305
11.18.6 CCD Check....I-305
11.18.7 Memory/HDD Adj....I-306
11.18.8 Memory/HDD State....I-308
11.18.9 Color Regist....I-308
11.18.10 Load Check....I-308
11.18.11 Adjustment Data List....I-311
11.18.12 Self-diagnostic....I-311
11.19 Test Mode....I-315
11.19.1 Procedure for test pattern output....I-315
11.19.2 Gradation Pattern....I-315
11.19.3 Halftone Pattern....I-316
11.19.4 Lattice Pattern....I-316
11.19.5 Solid Pattern....I-317
11.19.6 Color Sample....I-317
11.19.7 8 Color Solid Pattern....I-317
11.19.8 CMM pattern....I-317
11.19.9 Isolated Dot Pattern....I-317
11.19.10 Paper Passage Test....I-318
11.19.11 Fax Test-Signal Send Test....I-318
11.19.12 Fax Test-Signal Receive Test....I-320
11.19.13 Fax Test-NCU TEST....I-321
11.20 ADF....I-322
11.20.1 Original Stop Position....I-322
11.20.2 Registration Loop Adj....I-324
11.20.3 Auto Stop Position Adjustment....I-324
11.20.4 Paper Passage....I-325
11.20.5 Sensor Check....I-325
11.20.6 Original Tray Width....I-326
11.20.7 Read Pos Adj....I-327
11.20.8 Feed Zoom....I-328
11.20.9 Scanning Light Adjustment....I-328
11.20.10 Mixed original size adjustment....I-329

11.20.11 Home Read Position Adjust....I-329
11.20.12 FD-Mag. Adj. (B)....I-329
11.20.13 Main Scanning Direction Zoom....I-330
11.21 FAX setting (Line1)....I-331
11.21.1 Modem/NCU....I-331
11.21.2 Network....I-334
11.21.3 System....I-336
11.21.4 Fax File Format....I-339
11.21.5 Communication....I-339
11.21.6 List Output....I-343
11.21.7 Function Parameter....I-343
11.21.8 Initialization....I-344
11.22 FAX setting (Line2, Line 3, Line 4)....I-344
11.22.1 Modem/NCU....I-345
11.22.2 Network....I-349
11.22.3 Communication....I-350
11.22.4 Initialization....I-352
11.23 FAX setting (Address parameter list: for line 1, line 2, line 3 and line 4)....I-352
11.23.1 0b000#....I-352
11.23.2 0b001#....I-355
11.23.3 0b002#....I-356
11.23.4 0b003#....I-357
11.23.5 0b004#, 0b005#....I-358
11.23.6 0b006#....I-358
11.23.7 0e000#....I-359
11.23.8 0e001#....I-362
11.23.9 0e002#....I-364
11.23.10 0e003#....I-364
11.23.11 0e004#....I-364
11.23.12 0e005#....I-367
11.23.13 12000#....I-368
11.23.14 13000#....I-371
11.23.15 13003#....I-373
11.23.16 13004#....I-375
11.23.17 13005#....I-375
11.23.18 13006#....I-375
11.23.19 13007#....I-377
11.23.20 13008#....I-379
11.24 FAX setting (Address parameter list: for line 1)....I-379
11.24.1 0e009#....I-379
11.24.2 0e00a#....I-382
11.24.3 0e00b#....I-384
11.24.4 0e00c#....I-387
11.24.5 0e00d#....I-389
11.24.6 0e00e#....I-391
11.24.7 0e00f#....I-394
11.24.8 0e010#....I-395
11.24.9 0e011#....I-396
11.24.10 0f000#....I-397
11.24.11 0f001#....I-399
11.24.12 10000#....I-400
11.24.13 10001#....I-402
11.25 FAX setting (Address parameter list: for line 2)....I-403
11.25.1 0e01a#....I-403
11.25.2 0e01b#....I-406
11.25.3 0e01c#....I-408
11.25.4 0e01d#....I-410
11.25.5 0e01e#....I-413
11.25.6 0e01f#....I-415
11.25.7 0e020#....I-418
11.25.8 0e021#....I-419
11.25.9 0e022#....I-420
11.25.10 0f002#....I-421
11.25.11 0f003#....I-423
11.25.12 10002#....I-424
11.25.13 10003#....I-426
11.26 FAX setting (Address parameter list: for line 3)....I-427
11.26.1 0e02b#....I-427
11.26.2 0e02c#....I-430
11.26.3 0e02d#....I-432

11.26.4 0e02e#.....I-434
11.26.5 0e02f#.....I-437
11.26.6 0e030#.....I-439
11.26.7 0e031#.....I-441
11.26.8 0e032#.....I-442
11.26.9 0e033#.....I-444
11.26.10 0f004#.....I-445
11.26.11 0f005#.....I-447
11.26.12 10004#.....I-448
11.26.13 10005#.....I-450
11.27 FAX setting (Address parameter list: for line 4).....I-451
11.27.1 0e03c#.....I-451
11.27.2 0e03d#.....I-453
11.27.3 0e03e#.....I-456
11.27.4 0e03f#.....I-458
11.27.5 0e040#.....I-460
11.27.6 0e041#.....I-463
11.27.7 0e042#.....I-465
11.27.8 0e043#.....I-466
11.27.9 0e044#.....I-468
11.27.10 0f006#.....I-468
11.27.11 0f007#.....I-471
11.27.12 10006#.....I-471
11.27.13 10007#.....I-474
11.28 Finisher.....I-475
11.28.1 FS-FN adjustment - Center Staple Position (SD-511).....I-475
11.28.2 FS-FN adjustment - Half-Fold Position (SD-511).....I-476
11.28.3 FS-FN adjustment - 1st Tri-Fold Adjustment/2nd Tri-Fold Adjustment (SD-511).....I-476
11.28.4 FS-FN adjustment - Punch Edge Adj (PK-520).....I-477
11.28.5 FS-FN adjustment - Punch Regist Loop Size (PK-519/PK-520).....I-478
11.28.6 FS-FN adjustment - Finisher Components Test Mode.....I-478
11.28.7 FS-FN adjustment - Alignment plate Position (FS-533).....I-479
11.28.8 FS-FN adjustment - Paper Alignment Guides W. Adj. (FS-534).....I-479
11.28.9 Punch Option Setting.....I-480
11.28.10 Max. # of Folded Sheets Setting (SD-511).....I-480
11.28.11 Job Separator (JS-506).....I-480
11.29 Network Settings.....I-481
11.29.1 2nd Network Setting - 2nd network card settings.....I-481
11.29.2 2nd Network Setting - Operating Mode.....I-481
11.29.3 2nd Network Setting - SSID.....I-481
11.29.4 2nd Network Setting - Authentication/Encryption Algorithm.....I-481
11.29.5 2nd Network Setting - WEP Key.....I-482
11.29.6 2nd Network Setting - Passphrase.....I-482
11.29.7 2nd Network Setting - Wireless Channel.....I-482
11.29.8 2nd Network Setting - ANY Connection.....I-482
11.29.9 2nd Network Setting - Connect permission extension address list.....I-482
11.29.10 2nd Network Setting - DHCP Server Setting.....I-482
11.29.11 2nd Network Setting - TCP/IP Settings.....I-483
11.30 Machine Update Setting.....I-483
Internet ISW.....I-483
11.30.1 Internet ISW - Internet ISW Set.....I-483
11.30.2 Internet ISW - HTTP Setting.....I-483
11.30.3 Internet ISW - FTP Setting.....I-484
11.30.4 Internet ISW - Forwarding Access Setting.....I-484
11.30.5 Internet ISW - Download.....I-485
11.30.6 Internet ISW - Update Start Time Settings.....I-486
11.30.7 Machine Auto Update setting - Auto Update setting.....I-486
11.30.8 Machine Auto Update setting - Relay server setting.....I-487
11.30.9 Machine Auto Update setting - Transmission log Update.....I-487
11.30.10 Machine Auto Update setting - Transmission Server Log.....I-488
11.30.11 Machine Auto Update setting - Update Log Display.....I-488
11.30.12 Machine Auto Update setting - Relay Server Log Confirmation.....I-488
11.30.13 Machine Auto Update setting - Manual Update.....I-489
11.30.14 Machine Auto Update setting - Machine Export setting.....I-489
11.30.15 Machine Auto Update setting - Machine Update Password.....I-489
12. ENHANCED SECURITY.....I-490
12.1 List of Enhanced Security.....I-490
12.2 Starting/Exiting.....I-490
12.2.1 Starting procedure.....I-490
12.2.2 Exiting procedure.....I-490

12.3 Enhanced Security....I-491
12.3.1 CE Password....I-491
12.3.2 Administrator Password....I-491
12.3.3 Administrator Feature Level....I-491
12.3.4 CE Authentication....I-492
12.3.5 Life Stop Setting....I-492
12.3.6 Memory Data Backup....I-492
12.3.7 operation Ban release time....I-492
12.3.8 Administrator unlocking....I-493
12.3.9 Engine FW DipSW....I-493
12.3.10 Engine Data Backup....I-496
12.3.11 HDD Data Backup....I-496
13. BILLING SETTING....I-498
Billing Setting....I-498
13.1 List of billing setting....I-498
13.2 Starting/Exiting....I-498
13.2.1 Starting procedure....I-498
13.2.2 Exiting procedure....I-499
13.3 Billing Setting....I-499
13.3.1 Counter Setting....I-499
13.3.2 Management Function Choice....I-501
13.3.3 Management Function Choice - Key Counter IF Vendor....I-501
13.3.4 Management Function Choice - Authentication Device 2....I-501
13.3.5 Management Function Choice - Key Counter Only....I-504
13.3.6 Management Function Choice - Management Device....I-505
13.3.7 Management Function Choice - Vendor 2....I-505
13.3.8 Setting items that automatically change the setting values....I-506
13.3.9 Coverage Rate Clear....I-507
13.3.10 License management - Activation....I-507
13.3.11 License management - Deactivation....I-511
13.3.12 License management - Repair....I-515
13.3.13 License management - Initialize....I-519
13.3.14 License management - Request Code....I-519
13.3.15 License management - List....I-519
13.3.16 License management - Function List....I-520
13.3.17 Manage OpenAPI Authentication....I-520
13.3.18 WebDAV Server Setting....I-520
14. DEBUG SETTINGS....I-521
Debug Settings....I-521
14.1 List of debug settings....I-521
14.2 Starting/Exiting....I-521
14.2.1 Starting procedure....I-521
14.2.2 Exiting procedure....I-521
14.3 Debug Settings....I-522
14.3.1 Debug Log Output....I-522
14.3.2 Acquiring Mode....I-522
14.3.3 TX Debug Log Settings....I-523
14.3.4 USB Password....I-524
14.4 Operation of the debug log function....I-524
14.4.1 Basic mode....I-524
14.4.2 Enhance mode....I-525
15. CONTENTS TO BE CLEARED BY RESET FUNCTION....I-528
16. MECHANICAL ADJUSTMENT bizhub 364e/284e/224e....I-529
16.1 Scanner section....I-529
16.1.1 Adjustment of the scanner motor belt....I-529
16.2 Paper feed section....I-529
16.2.1 Centering adjustment of the tray 1/2....I-529
16.2.2 Pick-up pressure adjustment of the tray 1/2....I-530
16.2.3 Separator roller pressure adjustment of the bypass tray....I-531
16.2.4 Adjustment of the bypass CD paper size VR....I-532
16.3 Fusing section....I-533
16.3.1 Adjusting the parallelism of the fusing unit path....I-533
17. MECHANICAL ADJUSTMENT DF-701....I-535
17.1 Original document feed section....I-535
17.1.1 Adjusting the height....I-535
17.1.2 Adjusting front side skew feed on ADF....I-535
17.1.3 Adjusting back side skew feed on ADF....I-537
17.1.4 Adjusting the pressure of the separation roller....I-538
18. MECHANICAL ADJUSTMENT DF-624....I-540

18.1 Original document feed section....I-540
18.1.1 Adjusting the height....I-540
18.1.2 Adjusting front side skew feed on ADF....I-540
18.1.3 Adjusting the pressure of the separation roller....I-542
19. MECHANICAL ADJUSTMENT PC-110/PC-210....I-544
19.1 Paper reference position....I-544
19.1.1 Purpose....I-544
19.1.2 Procedure....I-544
20. MECHANICAL ADJUSTMENT PC-410....I-545
20.1 Paper reference position....I-545
20.1.1 Purpose....I-545
20.1.2 Procedure....I-545
20.2 Shifter movement timing belt adjustment....I-545
20.2.1 Procedure....I-545
21. MECHANICAL ADJUSTMENT PK-519....I-547
21.1 Punch section....I-547
21.1.1 Punch hole deviation correction....I-547
22. MECHANICAL ADJUSTMENT PK-520....I-549
22.1 Punch section....I-549
22.1.1 Punch hole deviation correction....I-549
23. MECHANICAL ADJUSTMENT SD-511....I-551
23.1 Paper exit section....I-551
23.1.1 Half-fold skew adjustment....I-551
J REWRITING OF FIRMWARE....J-1
1. Confirming the firmware version....J-2
1.1 Procedure....J-2
2. USB memory....J-3
2.1 Preparation....J-3
2.2 Procedure....J-3
2.3 Action when data transfer fails....J-5
2.4 Entering the machine type information....J-5
3. Internet ISW....J-7
3.1 Preparations for firmware rewriting....J-7
3.1.1 Outline....J-7
3.1.2 Service environment....J-7
3.1.3 Preparations for firmware rewriting....J-7
3.2 Making the firmware data....J-9
3.2.1 Outline....J-9
3.2.2 Procedure....J-9
3.3 Firmware rewriting from the control panel....J-9
3.3.1 Firmware rewriting from the control panel....J-9
4. Procedures for rewriting the firmware by using the Auto Update function....J-12
4.1 Outline....J-12
4.2 Service environment....J-12
4.3 Procedures for rewriting the firmware by using the Auto Update function....J-12
4.3.1 Preparations....J-12
4.3.2 Download the firmware data automatically from the program server....J-13
5. Firmware Distribute Server function (Relay server)....J-15
5.1 Outline....J-15
5.2 Service environment....J-15
5.3 Firmware relay procedures by using “relay server function”....J-15
5.3.1 Preparations....J-15
5.3.2 Download and open the relay data automatically from the program server....J-15
5.3.3 Download the firmware opened from the relay server by using the Auto Update function on the other MFP....J-16
6. CS Remote Care....J-17
6.1 Firmware rewriting from the CS Remote Care....J-17
7. How to install the i-Option data....J-18
7.1 Available function for i-Option....J-18
7.2 LK-107/LK-108 font data installation procedure....J-18
7.2.1 When the font data is ***.pdf format file....J-18
K TROUBLESHOOTING....K-1
1. JAM CODE....K-1
(1) JAM DISPLAY....K-1
(2) Misfeed display resetting procedure....K-1
1.1 List of the JAM code....K-1

1.2 JAM that do not display the JAM code....K-2
1.3 Sensor layout....K-4
1.3.1 bizhub 364e/284e/224e....K-4
1.3.2 DF-701....K-4
1.3.3 DF-624....K-5
1.3.4 PC-110/PC-210....K-5
1.3.5 PC-410....K-6
1.3.6 FS-533/PK-519....K-6
1.3.7 FS-534/PK-520/SD-511....K-7
1.4 Initial check items....K-7
1.5 Jam when thin or thick paper is fed....K-7
1.5.1 Paper jam for thin paper....K-7
1.5.2 Paper jam for thick paper....K-8
1.6 1#-##....K-8
1.6.1 10-01, 10-02, 10-40....K-8
1.6.2 11-01, 11-02, 11-40....K-8
1.6.3 12-01, 12-40....K-9
1.6.4 13-01, 13-40....K-9
1.6.5 14-01, 14-40....K-10
1.6.6 16-01, 16-40....K-10
1.7 2#-##....K-11
1.7.1 20-01, 20-02....K-11
1.7.2 20-21....K-12
1.7.3 20-22....K-12
1.8 3#-##....K-13
1.8.1 30-03....K-13
1.8.2 32-01, 32-05....K-13
1.9 6#-##....K-14
1.9.1 66-01, 66-11, 66-21....K-14
1.9.2 66-02, 66-12....K-15
1.9.3 66-03, 66-13, 66-23, 66-33....K-15
1.9.4 66-04, 66-14, 66-24, 66-34....K-16
1.9.5 66-05, 66-06, 66-15....K-17
1.9.6 66-07....K-18
1.10 7#-##....K-18
1.10.1 72-14....K-18
1.10.2 72-15....K-19
1.10.3 72-16....K-19
1.10.4 72-17....K-20
1.10.5 72-18....K-20
1.10.6 72-19....K-21
1.10.7 72-21....K-21
1.10.8 72-22....K-22
1.10.9 72-23....K-22
1.10.10 72-25....K-22
1.10.11 72-26....K-23
1.10.12 72-43....K-23
1.10.13 72-70....K-24
1.10.14 72-81....K-24
1.10.15 72-85....K-24
1.10.16 72-86....K-25
1.10.17 72-87....K-25
1.10.18 75-42....K-25
1.10.19 75-43....K-26
1.11 9#-##....K-26
1.11.1 92-01, 92-02, 92-40....K-26
1.11.2 93-10....K-27
1.11.3 99-01....K-27
1.11.4 99-02....K-28
1.11.5 99-03....K-28
1.11.6 99-04....K-28
1.11.7 99-05....K-28
1.11.8 99-06....K-29
1.11.9 99-07....K-29
1.11.10 99-08....K-29
1.11.11 99-09....K-29
2. MALFUNCTION CODE....K-31
2.1 Display procedure....K-31
2.2 List of the malfunction code....K-31
2.3 S-1....K-31

2.3.1 Contents....K-31
2.3.2 Procedure....K-32
2.4 S-2....K-32
2.4.1 Contents....K-32
2.4.2 Procedure....K-32
2.5 D-1....K-32
2.5.1 Contents....K-32
2.5.2 Procedure....K-32
2.6 D-3....K-32
2.6.1 Contents....K-32
2.6.2 Procedure....K-33
2.7 P-5....K-33
2.7.1 Contents....K-33
2.7.2 Procedure....K-33
2.8 P-9....K-33
2.8.1 Contents....K-33
2.8.2 Procedure....K-33
2.9 P-27....K-34
2.9.1 Contents....K-34
2.9.2 Procedure....K-34
2.10 P-33....K-34
2.10.1 Contents....K-34
2.10.2 Procedure....K-34
3. TROUBLE CODE....K-35
3.1 Display procedure....K-35
3.2 Trouble resetting procedure....K-35
3.2.1 Trouble resetting procedure by Trouble Reset key....K-35
3.2.2 Trouble resetting procedure by the auto cancel function....K-35
3.2.3 Trouble resetting procedure by remote operation....K-35
3.3 Trouble isolation function....K-36
3.4 List of the trouble code....K-36
3.5 C0###....K-42
3.5.1 C0002....K-42
3.5.2 C0106....K-42
3.5.3 C0107....K-43
3.5.4 C0108....K-43
3.5.5 C0109....K-44
3.5.6 C0202....K-44
3.5.7 C0204....K-45
3.5.8 C0206....K-45
3.5.9 C0208....K-45
3.5.10 C0210....K-46
3.5.11 C0211....K-47
3.5.12 C0214....K-47
3.6 C1###....K-48
3.6.1 C1004....K-48
3.6.2 C1081....K-48
3.6.3 C1102....K-49
3.6.4 C1103....K-50
3.6.5 C1105....K-51
3.6.6 C1106....K-51
3.6.7 C1109....K-52
3.6.8 C1112....K-53
3.6.9 C1113....K-53
3.6.10 C1114....K-54
3.6.11 C1115....K-54
3.6.12 C1132....K-55
3.6.13 C1140....K-56
3.6.14 C1141....K-57
3.6.15 C1144....K-57
3.6.16 C1145....K-58
3.6.17 C1156....K-58
3.6.18 C1182....K-59
3.6.19 C1184....K-59
3.6.20 C1195....K-60
3.6.21 C1196....K-60
3.6.22 C1197....K-61
3.6.23 C11A1....K-61
3.6.24 C11A2....K-62
3.6.25 C11E1....K-62

3.6.26 C1402....K-63
3.7 C2###....K-63
3.7.1 C2355....K-63
3.7.2 C2414....K-63
3.7.3 C2557....K-64
3.7.4 C2558....K-64
3.7.5 C255C....K-65
3.7.6 C2564....K-65
3.7.7 C2650....K-66
3.7.8 C2A14....K-66
3.8 C3###....K-67
3.8.1 C3101....K-67
3.8.2 C3201, C3202....K-67
3.8.3 C3302....K-68
3.8.4 C3425....K-68
3.8.5 C3722, C3725, C3726....K-68
3.8.6 C3825, C3826....K-69
3.8.7 C3922, C3925, C3926....K-70
3.9 C4###....K-70
3.9.1 C4091....K-70
3.9.2 C4101....K-71
3.9.3 C4501....K-71
3.9.4 C4801....K-72
3.9.5 C4802....K-72
3.10 C5###....K-72
3.10.1 C5102, C5103....K-72
3.10.2 C5351....K-73
3.10.3 C5354....K-73
3.10.4 C5355....K-74
3.10.5 C5370....K-74
3.10.6 C5372....K-74
3.10.7 C5501....K-75
3.10.8 C5601....K-75
3.10.9 C5603....K-75
3.11 C6###....K-76
3.11.1 C6001....K-76
3.11.2 C6002....K-76
3.11.3 C6102, C6103....K-77
3.11.4 C6104, C6105....K-77
3.11.5 C6704....K-78
3.11.6 C6751....K-78
3.11.7 C6752....K-79
3.11.8 C6753....K-79
3.11.9 C6754, C6755....K-80
3.11.10 C6756....K-80
3.11.11 C6901, C6902, C6903....K-81
3.11.12 C6911, C6912, C6913....K-81
3.11.13 C6F01....K-81
3.12 C8###....K-82
3.12.1 C8101....K-82
3.12.2 C8107....K-83
3.12.3 C8302....K-83
3.12.4 C8401....K-84
3.13 C9###....K-84
3.13.1 C9401, C9402....K-84
3.13.2 C9403, C9404....K-85
3.14 CA###....K-86
3.14.1 CA051, CA052, CA053....K-86
3.15 CC###....K-86
3.15.1 CC001....K-86
3.15.2 CC140....K-87
3.15.3 CC151, CC152....K-87
3.15.4 CC155....K-87
3.15.5 CC156....K-88
3.15.6 CC159, CC15A....K-88
3.15.7 CC15B....K-88
3.15.8 CC15C....K-89
3.15.9 CC163....K-89
3.15.10 CC164....K-89
3.15.11 CC165....K-90

3.15.12 CC170, CC171, CC172, CC173, CC174, CC180, CC181, CC182, CC183, CC184, CC185, CC186....K-90
3.15.13 CC190....K-91
3.15.14 CC191....K-91
3.15.15 CC211....K-92
3.15.16 CC212....K-92
3.15.17 CC213....K-93
3.15.18 CC214....K-93
3.15.19 CC216....K-93
3.16 CD###....K-94
3.16.1 CD002....K-94
3.16.2 CD004, CD00F, CD020....K-94
3.16.3 CD010....K-95
3.16.4 CD011....K-95
3.16.5 CD012....K-95
3.16.6 CD030....K-95
3.16.7 CD041, CD042, CD043, CD044, CD045, CD046....K-96
3.16.8 CD047, CD048, CD049, CD04A, CD04B....K-96
3.16.9 CD110....K-96
3.16.10 CD201, CD202, CD203....K-97
3.16.11 CD211, CD212....K-97
3.16.12 CD241, CD242....K-98
3.16.13 CD261....K-98
3.16.14 CD262....K-98
3.16.15 CD271....K-99
3.16.16 CD272....K-99
3.16.17 CD3##....K-100
3.16.18 CD370....K-100
3.16.19 CD390....K-100
3.16.20 CD3A0....K-100
3.16.21 CD401, CD402, CD403, CD404, CD405, CD406, CD407, CD411, CD412, CD413....K-101
3.16.22 CDC##....K-101
3.16.23 CDF50, CDF70, CDFA0....K-102
3.16.24 CDF51, CDF71, CDFA1....K-102
3.17 CE###....K-102
3.17.1 CE001, CE003, CE004, CE005, CE006, CE007....K-102
3.17.2 CE002....K-103
3.17.3 CE101....K-103
3.17.4 CE201....K-104
3.17.5 CE301, CE302, CE303, CE304, CE305....K-104
3.17.6 CED01....K-104
3.17.7 CEEE1....K-105
3.17.8 CEEE2....K-105
3.17.9 CEEE3....K-105
4. ABORT CODE....K-107
4.1 Troubleshooting of the abort code....K-107
4.1.1 Contents....K-107
4.1.2 Procedure....K-107
4.2 CF0##....K-107
4.3 CF1##....K-108
4.4 CF2##....K-108
4.5 CF3##....K-108
4.6 CF4##....K-108
4.7 CF5##....K-108
4.8 CF6##....K-108
4.9 CF7##....K-109
4.10 CF8##....K-109
4.11 CF9##....K-109
4.12 CFA##....K-110
4.13 CFB##....K-110
4.13.1 CFB0#....K-110
4.13.2 CFB1#....K-110
4.13.3 CFB2#....K-111
4.13.4 CFB3#....K-111
4.13.5 CFB4#....K-111
4.13.6 CFB5#....K-111
4.13.7 CFB6#....K-112
4.13.8 CFB7#....K-112
4.13.9 CFB8#....K-112
4.13.10 CFB9#....K-112
4.13.11 CFBA#....K-113

4.13.12 CFBB#....K-113
4.13.13 CFBC#....K-113
4.14 CFC##....K-113
4.14.1 CFC0#....K-113
4.14.2 CFC1#....K-113
4.14.3 CFC2#....K-114
4.14.4 CFC3#....K-114
4.14.5 CFC4#....K-114
4.14.6 CFC5#....K-115
4.14.7 CFC6#....K-115
4.14.8 CFC7#....K-115
4.14.9 CFC8#....K-116
4.14.10 CFC9#....K-116
4.14.11 CFCA#....K-116
4.14.12 CFCB#....K-117
4.14.13 CFCC#....K-117
4.14.14 CFCD#....K-117
4.14.15 CFCE#....K-117
4.14.16 CFCF#....K-118
4.15 CFD##....K-118
4.15.1 CFD0#....K-118
4.15.2 CFD1#....K-118
4.15.3 CFD2#....K-119
4.15.4 CFD3#....K-119
4.15.5 CFD4#....K-119
4.15.6 CFD5#....K-120
4.15.7 CFD6#....K-120
4.15.8 CFD7#....K-120
4.15.9 CFD8#....K-120
4.15.10 CFDA#....K-120
4.16 CFE##....K-121
4.16.1 CFE0#....K-121
4.16.2 CFE1#....K-121
4.16.3 CFE2#....K-121
4.16.4 CFE3#....K-121
4.16.5 CFE4#....K-122
4.16.6 CFE5#....K-122
4.16.7 CFE6#....K-122
4.16.8 CFE7#....K-123
4.16.9 CFE8#....K-123
4.16.10 CFEA#....K-123
4.17 CFF##....K-123
4.17.1 CFF0#....K-123
4.17.2 CFF1#....K-124
4.17.3 CFF2#....K-124
4.17.4 CFF3#....K-124
4.17.5 CFF4#....K-124
4.17.6 CFF5#....K-125
4.17.7 CFF6#....K-125
4.17.8 CFF7#....K-125
4.17.9 CFF8#....K-126
4.17.10 CFFA#....K-126
4.17.11 CFFC#....K-126
4.17.12 CFFD#....K-126
4.17.13 CFFE#....K-127
5. ERROR CODE FOR THE INTERNET ISW....K-128
5.1 Error code list for the Internet ISW....K-128
5.2 0x0#....K-128
5.3 0x1#....K-129
5.4 0x2#....K-129
6. CS Remote Care ERROR CODE....K-130
6.1 Troubleshooting for CS Remote Care....K-130
6.2 CS Remote Care Operation under Enhanced Security Mode....K-130
6.3 List of the CS Remote Care error code....K-130
6.3.1 When connecting by modem....K-130
6.3.2 When connecting by e-mails....K-131
6.3.3 When connecting by http....K-133
6.3.4 When connecting by Fax modem....K-135
7. NETWORK ERROR CODE....K-136
7.1 Display procedure....K-136

7.2 IEEE802.1X....K-136
7.3 LDAP....K-136
7.4 E-Mail/Internet Fax....K-138
7.5 FTP transmission....K-139
7.6 SMB transmission....K-139
7.7 SMTP transmission....K-140
7.8 WebDAV transmission....K-141
7.9 SMB browsing....K-142
7.10 User authentication....K-143
7.11 WebDAV client (Response reception)....K-143
7.12 WebDAV client (Request sending)....K-143
7.13 WSD scan....K-144
7.14 Bluetooth....K-145
7.15 GSS-API....K-145
7.16 Scan server transmission....K-145
7.17 Packet capture....K-146
8. FAX TROUBLE CODE....K-147
The error in the transmission/reception system....K-147
8.1 B0##....K-147
8.2 B11#....K-147
8.3 B12#....K-147
8.4 B13#....K-147
8.5 B14#....K-148
8.6 B15#....K-148
8.7 B16#....K-148
8.8 B17#....K-148
8.9 B18#....K-148
8.10 B19#....K-149
8.11 T0#....K-149
8.12 T1#....K-149
8.13 T2#....K-150
8.14 T3#....K-150
8.15 T4#....K-150
8.16 T5#....K-150
8.17 T6#....K-151
8.18 T7#....K-151
8.19 T8#....K-151
8.20 T9#....K-152
8.21 R0#....K-152
8.22 R1#....K-152
8.23 R2#....K-152
8.24 R3#....K-153
8.25 R4#....K-153
8.26 R5#....K-153
8.27 R6#....K-154
8.28 R7#....K-154
8.29 R8#....K-154
8.30 R9#....K-154
8.31 Others....K-155
9. DIAGNOSTIC CODES....K-156
9.1 Outline....K-156
9.2 Explanation....K-156
9.2.1 The diagnostic code....K-156
9.2.2 Information of communication results and conditions....K-156
10. NETWORK FAX ERROR CODE....K-158
10.1 Error code list of the transmission system....K-158
10.2 Error code list of the reception system....K-159
11. Open API RELATED TROUBLE....K-160
11.1 Outline....K-160
11.2 Types of Trouble....K-160
11.3 Solution....K-160
11.3.1 When using an application....K-160
11.3.2 After rewriting the firmware of the machine....K-161
12. TROUBLES THAT DO NOT DISPLAY THE TROUBLE CODE....K-162
12.1 Machine is not energized at all (DCPU operation check)....K-162
12.1.1 Contents....K-162
12.1.2 Procedure....K-162
12.2 Fusing heaters do not operate....K-162
12.2.1 Contents....K-162

12.2.2 Procedure....K-162
12.3 Power is not supplied to option....K-162
12.3.1 DF-701/DF-624....K-162
12.3.2 PC-110/PC-210/PC-410....K-163
12.3.3 FS-533/FS-534....K-163
13. OTHER TROUBLE....K-164
13.1 Firmware error warning....K-164
13.1.1 Action....K-164
13.2 HDD lock password error warning....K-164
13.2.1 Detection timing....K-164
13.2.2 Action....K-164
14. TROUBLESHOOTING OF i-Option....K-165
14.1 Structure of license management....K-165
14.2 License management information....K-165
14.3 Error message....K-165
14.3.1 License management error....K-165
15. IMAGE QUALITY PROBLEM....K-166
15.1 How to read element data....K-166
15.1.1 Table number....K-166
15.1.2 Level history 1....K-167
15.1.3 Level history 2....K-167
15.2 Troubleshooting procedure overview....K-168
15.2.1 Test pattern printing....K-168
15.2.2 Self-diagnostic function....K-168
15.3 Corrective action procedure....K-169
15.3.1 Image trouble sample illustrations....K-169
15.3.2 White line 1, White band 1, Black line 1, Black band 1....K-170
15.3.3 White line 2, White band 2, Black line 2, Black band 2....K-172
15.3.4 Uneven density 1....K-174
15.3.5 Uneven density 2....K-175
15.3.6 Faint image, low image density (ID lowering)....K-176
15.3.7 Gradation reproduction failure....K-178
15.3.8 Foggy background....K-179
15.3.9 Void areas, White spots....K-180
15.3.10 Black spots....K-181
15.3.11 Blurred image....K-182
15.3.12 Back marking....K-183
15.3.13 Blank copy, Black copy....K-184
15.3.14 Uneven pitch....K-185
15.3.15 Uneven gloss, rough gloss....K-186
15.3.16 Poor fusing performance, Offset....K-187
15.3.17 Brush effect, Image bleeding....K-187
15.3.18 Blurred fine lines....K-188
15.3.19 Moire....K-189
15.3.20 Skewed image....K-190
15.3.21 Distorted image....K-191
15.3.22 ACS malfunction....K-191
15.3.23 Abnormal image....K-192
16. IC PROTECTOR....K-193
16.1 Outline....K-193
16.2 IC protector list....K-193
16.2.1 bizhub 364e/284e/224e....K-193
16.2.2 DF-624....K-193
16.2.3 DF-701....K-194
16.2.4 PC-410....K-194
16.2.5 JS-506....K-194
16.2.6 FS-534....K-195
16.2.7 SD-511....K-195
16.2.8 FS-533....K-195
16.2.9 PK-519....K-195
L PARTS/CONNECTOR LAYOUT DRAWING....L-1
1. PARTS LAYOUT DRAWING....L-1
1.1 bizhub 364e/284e/224e....L-1
1.1.1 Scanner section....L-1
1.1.2 Front side....L-1
1.1.3 Back side....L-3
1.1.4 Left side....L-5
1.1.5 Right side....L-6

1.1.6 Manual bypass tray....L-7
1.1.7 Tray 1....L-7
1.1.8 Tray 2....L-8
1.1.9 Fusing/paper exit section....L-8
1.1.10 Duplex section....L-9
1.2 DF-701/SP-501 (Option)....L-9
1.3 DF-624/SP-501 (Option)....L-11
1.4 PC-210 (Option)....L-12
1.4.1 Board/switch/sensor/others....L-12
1.4.2 Load....L-12
1.5 PC-410 (Option)....L-13
1.5.1 Board/switch/sensor/others....L-13
1.5.2 Load....L-13
1.6 JS-506 (Option)....L-14
1.7 FS-534 (Option)....L-14
1.8 PK-520 (Option)....L-16
1.9 SD-511 (Option)....L-16
1.10 FS-533 (Option)....L-17
1.11 PK-519 (Option)....L-18
2. CONNECTOR LAYOUT DRAWING....L-19
2.1 BOARD CONNECTOR LAYOUT DRAWING....L-19
2.1.1 bizhub 364e/284e/224e....L-19
2.1.2 DF control board (DFCB)....L-23
2.1.3 Dual scan image processing board (DSIPB)....L-24
2.1.4 PC control board (PCCB)....L-25
2.1.5 JS control board (JSCB)....L-27
2.1.6 FS control board (FSCB)....L-28
2.1.7 SD drive board (SDDB)....L-29
2.1.8 Stapler relay board (STREYB)....L-29
2.1.9 PK control board (PKCB)....L-29
2.2 RELAY CONNECTOR LAYOUT DRAWING....L-30
2.2.1 bizhub 364e/284e/224e....L-30

M TIMING CHART....M-1

1. bizhub 364e/284e/224e....M-1
1.1 Timing chart when the main power switch is turned ON....M-1
2. FS-534/SD-511....M-2
2.1 Shift mode....M-2
2.1.1 Operating conditions....M-2
2.1.2 Timing chart....M-2
2.2 Center staples mode....M-2
2.2.1 Operating conditions....M-2
2.2.2 Timing chart....M-2

N WIRING DIAGRAM....N-1

1. bizhub 364e/284e/224e....N-1
1.1 Main body....N-1
2. Option....N-3
2.1 DF-701....N-3
2.1.1 DF-701....N-3
2.2 DF-624....N-4
2.2.1 DF-624....N-4
2.3 PC-110....N-5
2.3.1 PC-110....N-5
2.4 PC-210....N-6
2.4.1 PC-210....N-6
2.5 PC-410....N-7
2.5.1 PC-410....N-7
2.6 FS-533....N-8
2.6.1 FS-533....N-8
2.7 FS-534....N-9
2.8 SD-511....N-10
2.9 JS-506....N-11
2.9.1 JS-506....N-11

O THEORY OF OPERATION bizhub 364e/284e/224e....O-1

1. INTERFACE SECTION....O-1
1.1 Configuration....O-1
1.1.1 Front side....O-1

1.1.2 Right side....O-2
1.1.3 Rear side....O-5
2. SCANNER SECTION....O-7
2.1 Configuration....O-7
2.2 Drive....O-7
2.3 Operation....O-7
2.3.1 LED exposure unit....O-7
2.3.2 When the power is ON....O-8
2.3.3 Control when the Start key is pressed....O-8
2.3.4 Original scanning area....O-10
2.3.5 Original size detection control....O-10
2.3.6 Image processing....O-12
3. WRITE SECTION (PH SECTION)....O-13
3.1 Configuration....O-13
3.2 Operation....O-13
3.2.1 Outline....O-13
3.2.2 Laser exposure process....O-14
3.2.3 Laser emission timing....O-15
3.2.4 Laser emission stop....O-15
3.2.5 Laser emission area....O-16
3.2.6 PH window cleaning....O-16
3.2.7 Image processing....O-17
4. PHOTO CONDUCTOR SECTION....O-18
4.1 Configuration....O-18
4.2 Drive....O-18
4.3 Operation....O-18
4.3.1 Photo conductor drive mechanism....O-18
4.3.2 Photo conductor small amount rotation control....O-19
4.3.3 Erase LED control....O-19
4.3.4 Photo conductor cleaning....O-20
4.3.5 Charge corona control....O-21
4.3.6 Charge corona cleaning....O-21
4.3.7 Ozone filter....O-22
4.3.8 Drum unit detection....O-23
4.3.9 Drum unit life detection....O-24
4.3.10 Ozone filter new article detection....O-25
4.3.11 Ozone filter life detection....O-26
4.3.12 Number of field standard printed pages....O-27
5. DEVELOPING SECTION....O-28
5.1 Configuration....O-28
5.2 Drive....O-28
5.2.1 Developing section drive mechanism....O-28
5.3 Operation....O-29
5.3.1 Developing unit pressure/releases mechanism....O-29
5.3.2 Developer flow....O-29
5.3.3 Auto refining developing system....O-30
5.3.4 Developing bias....O-30
5.3.5 Toner scattering prevention....O-31
5.3.6 Developing cooling....O-31
5.3.7 Toner density control....O-31
5.3.8 Developing unit detection....O-32
5.3.9 Developing unit life detection....O-33
5.3.10 Number of field standard printed pages....O-34
6. TONER SUPPLY SECTION....O-35
6.1 Configuration....O-35
6.2 Drive....O-35
6.2.1 Toner bottle drive....O-35
6.2.2 Toner hopper drive....O-35
6.3 Operation....O-36
6.3.1 Toner replenishing overview....O-36
6.3.2 Toner replenishing from toner bottle to toner hopper....O-36
6.3.3 Toner replenishing from toner hopper to developing unit....O-37
6.3.4 Auxiliary toner replenishing control for toner hopper....O-38
6.3.5 Auxiliary toner replenishing control for developing unit....O-38
6.3.6 Toner spillage prevention shutter....O-39
6.3.7 Front door mechanism....O-40
6.3.8 Life control....O-41
7. 1ST TRANSFER SECTION....O-44
7.1 Configuration....O-44

7.2 Drive....O-44
7.3 Operation....O-44
7.3.1 Transfer belt drive....O-44
7.3.2 1st transfer roller control....O-45
7.3.3 1st transfer control....O-45
7.3.4 Transfer belt cleaning....O-45
7.3.5 Waste toner spillage prevention shutter....O-47
7.3.6 Transfer belt cooling....O-48
7.3.7 Cleaning blade foreign matter removal control....O-48
7.3.8 Transfer belt new article detection....O-49
7.3.9 Transfer belt life detection....O-49
8. 2ND TRANSFER SECTION....O-52
8.1 Configuration....O-52
8.2 Drive....O-53
8.3 Operation....O-53
8.3.1 2nd transfer control....O-53
8.3.2 Control of toner application to 2nd transfer roller....O-53
8.3.3 2nd transfer roller cleaning....O-54
8.3.4 Charge neutralization and separation of paper....O-54
8.3.5 Paper winding prevention guide....O-55
8.3.6 IDC sensor protection....O-55
8.3.7 2nd transfer roller new article detection....O-56
8.3.8 2nd transfer roller life detection....O-56
9. TONER COLLECTING SECTION....O-58
9.1 Configuration....O-58
9.2 Drive....O-58
9.3 Operation....O-58
9.3.1 Waste toner box drive mechanism....O-58
9.3.2 Control of waste toner conveyance through waste toner box....O-59
9.3.3 Waste toner box-in-position detection....O-60
9.3.4 Waste toner box full detection....O-61
9.3.5 Waste toner box new article detection....O-63
9.3.6 Waste toner spillage prevention shutter....O-63
10. PAPER FEED SECTION (MANUAL BYPASS TRAY)....O-64
10.1 Configuration....O-64
10.2 Drive....O-64
10.3 Operation....O-64
10.3.1 Up/down control....O-64
10.3.2 Paper feed control....O-65
10.3.3 Paper size detection control....O-67
10.3.4 Paper empty detection control....O-68
10.3.5 Adjustment for compatibility with heavy paper....O-69
11. PAPER FEED SECTION....O-70
11.1 Configuration....O-70
11.1.1 Tray1....O-70
11.1.2 Tray2....O-71
11.2 Drive....O-71
11.2.1 Drive....O-71
11.2.2 Layout of sensors and rollers....O-72
11.3 Operation....O-72
11.3.1 Up/down control....O-72
11.3.2 Paper feed control....O-73
11.3.3 Paper size detection control....O-78
11.3.4 Remaining paper detection control....O-80
11.3.5 Paper feed tray locking mechanism....O-81
11.3.6 Spring for thin paper use....O-82
12. VERTICAL TRANSPORT SECTION....O-83
12.1 Configuration....O-83
12.2 Drive....O-83
12.3 Operation....O-84
12.3.1 Vertical transport control....O-84
12.3.2 Transport clutch control....O-84
12.3.3 Operation timing....O-84
12.3.4 Right door mechanism....O-84
13. REGISTRATION SECTION....O-88
13.1 Configuration....O-88
13.2 Drive....O-89
13.3 Operation....O-89
13.3.1 Registration control....O-89

14. FUSING SECTION....O-92
14.1 Configuration....O-92
14.2 Drive....O-93
14.2.1 Fusing section roller drive....O-93
14.2.2 Pressure roller pressure drive....O-93
14.3 Operation....O-93
14.3.1 Fusing drive release mechanism....O-93
14.3.2 Fusing speed correction....O-94
14.3.3 Fusing pressure/retraction control....O-95
14.3.4 Fusing paper transport control....O-96
14.3.5 Paper separation mechanism....O-97
14.3.6 Fusing temperature control....O-97
14.3.7 Protection from abnormal temperatures....O-102
14.3.8 Fusing PPM control....O-103
14.3.9 Fusing unit new article detection....O-103
14.3.10 Fusing unit life detection....O-104
14.3.11 Fusing cooling control....O-106
15. PAPER EXIT/REVERSE SECTION....O-107
15.1 Configuration....O-107
15.2 Drive....O-107
15.3 Operation....O-108
15.3.1 Transport control....O-108
15.3.2 Exit paper cooling mechanism....O-109
16. DUPLEX SECTION....O-110
16.1 Configuration....O-110
16.2 Drive....O-111
16.3 Operation....O-111
16.3.1 Paper transport control....O-111
16.3.2 Duplex circulation control....O-113
17. IMAGE STABILIZATION CONTROL....O-119
17.1 Overview....O-119
17.2 Description of control....O-119
17.2.1 IDC sensor adjustment control....O-119
17.2.2 Max. density adjustment control....O-119
17.2.3 LD (laser diode) intensity adjustment control....O-119
17.2.4 Gamma correction control....O-120
17.3 Control contents....O-120
17.3.1 Image stabilization type (mode)....O-120
17.3.2 Control sequence by mode....O-120
17.4 Operation timing....O-120
17.4.1 Predrive operation....O-120
17.4.2 During a print cycle....O-120
17.4.3 Service Mode....O-121
17.4.4 Expert Adjustment....O-121
17.4.5 Stabilization time....O-121
18. IMAGE PROCESSING....O-122
18.1 Scanner section image processing block diagram....O-122
18.2 Write section image processing block diagram....O-122
19. POWER SUPPLY SECTION....O-124
19.1 Main power switch....O-124
19.2 Power key....O-124
19.2.1 Configuration....O-124
19.2.2 Operation....O-124
19.3 Power cables....O-125
19.3.1 Configuration....O-125
19.3.2 Operation....O-125
20. FAN CONTROL....O-126
20.1 Configuration....O-126
20.2 Function....O-126
20.3 Fan control....O-126
21. COUNTER CONTROL....O-128
21.1 Configuration....O-128
21.2 Operation....O-128
22. HEATER....O-129
22.1 Configuration....O-129
22.1.1 Front side....O-129
22.1.2 Rear side....O-129
22.2 Functions....O-129

22.3 Control....O-129
23. INDICATOR FUNCTION....O-130
23.1 Configuration....O-130
23.1.1 Control panel section....O-130
23.1.2 Front side section....O-130
23.2 Control....O-130
23.2.1 Power key and Start key indicator section....O-130
23.2.2 Warning Status indicator section....O-131
23.2.3 Operation status indicator section....O-132
23.2.4 Data indicator section....O-132
23.2.5 Remaining paper level display section....O-133
PA THEORY OF OPERATION DF-624....PA-1
1. CONFIGURATION....PA-1
1.1 Section configuration....PA-1
1.2 Paper path....PA-1
1.2.1 1-sided paper path....PA-1
1.2.2 2-sided paper path....PA-1
1.3 Configuration....PA-1
2. DRIVE....PA-3
2.1 Paper feed drive....PA-3
2.2 Registration drive....PA-3
2.3 Document reading drive....PA-4
2.4 Document reading glass cleaning drive....PA-4
3. OPERATION....PA-5
3.1 Document feed section....PA-5
3.1.1 Document set/empty detection....PA-5
3.1.2 Document size detection mechanism....PA-5
3.1.3 Pick-up roller up/down control....PA-7
3.1.4 Document feed/separation control....PA-7
3.2 Document registration section....PA-8
3.2.1 Document registration outline....PA-8
3.2.2 Document registration loop formation process....PA-9
3.3 Document reading section....PA-9
3.3.1 Transport mechanism....PA-9
3.3.2 Document reading glass cleaning mechanism....PA-9
3.3.3 Document reading roll pressure/release control....PA-11
3.4 Document switchback/exit section....PA-12
3.4.1 Document switchback/exit mechanism....PA-12
3.4.2 Switching mechanism for document switchback/exit....PA-12
3.4.3 Switchback exit roll pressure/retraction control....PA-13
3.4.4 Faxed document stamp function....PA-13
3.5 Paper path operation....PA-14
3.5.1 1-sided mode....PA-14
3.5.2 2-sided mode....PA-14
3.6 DF open/close detection mechanism....PA-15
3.6.1 Document exchange detection control....PA-15
3.6.2 DF open/close detection....PA-15
3.7 Cooling inside the unit mechanism....PA-15
3.8 Document separation roller pressure switching mechanism....PA-16
PB THEORY OF OPERATION DF-701....PB-1
1. CONFIGURATION....PB-1
1.1 Section configuration....PB-1
1.2 Paper path....PB-1
1.3 Configuration....PB-1
2. DRIVE....PB-3
2.1 Paper feed drive....PB-3
2.2 Registration drive....PB-3
2.3 Document reading drive....PB-4
2.4 Document reading /CIS glass cleaning drive....PB-4
3. OPERATION....PB-5
3.1 Document feed section....PB-5
3.1.1 Document set/empty detection....PB-5
3.1.2 Document size detection mechanism....PB-5
3.1.3 Pick-up roller up/down control....PB-7
3.1.4 Document feed/separation control....PB-7
3.2 Document registration section....PB-9
3.2.1 Document registration outline....PB-9

3.2.2 Document registration loop formation process....PB-9
3.3 Document reading section....PB-9
3.3.1 Document reading section....PB-9
3.3.2 Document reading roll pressure/release control....PB-10
3.3.3 Document reading glass cleaning mechanism....PB-11
3.3.4 CIS original reading control....PB-12
3.3.5 CIS control when power is turned ON....PB-13
3.3.6 CIS control when the document is loaded....PB-14
3.3.7 CIS control when the start key is pressed....PB-14
3.3.8 CIS glass contamination prevention control....PB-15
3.3.9 CIS cover....PB-15
3.4 Document exit section....PB-16
3.4.1 Document exit mechanism....PB-16
3.4.2 Faxed document stamp function....PB-16
3.5 Paper path operation....PB-17
3.6 DF open/close detection mechanism....PB-18
3.6.1 Document exchange detection control....PB-18
3.6.2 DF open/close detection....PB-18
3.7 Cooling inside the unit mechanism....PB-18
3.8 Document separation roller pressure switching mechanism....PB-18

PC THEORY OF OPERATION PC-110/PC-210....PC-1

1. CONFIGURATION....PC-1
2. PAPER PATH....PC-2
3. DRIVE....PC-3
4. OPERATION....PC-4
4.1 Papar feed section....PC-4
4.1.1 Paper feed drive mechanism....PC-4
4.1.2 Paper lifting motion....PC-4
4.2 Cassette section....PC-5
4.2.1 Paper size detection....PC-5
4.2.2 Remaining paper display mechanism....PC-5
4.3 Dehumidifier heater control (HT-509)....PC-6

PD THEORY OF OPERATION PC-410....PD-1

1. CONFIGURATION....PD-1
2. PAPER PATH....PD-2
3. DRIVE....PD-3
4. OPERATION....PD-4
4.1 Paper feed section....PD-4
4.1.1 Paper feed drive mechanism....PD-4
4.2 Main tray section....PD-4
4.2.1 Main tray up / down mechanism....PD-4
4.2.2 Main tray lower limit detection....PD-5
4.3 Sub tray section....PD-5
4.3.1 Shifter drive mechanism....PD-5
4.3.2 Sub tray paper remaining amount....PD-6
4.4 Remaining paper amount displayed mechanism....PD-6
4.5 Dehumidifier heater control (HT-509)....PD-7

PE THEORY OF OPERATION JS-506....PE-1

1. CONFIGURATION....PE-1
1.1 Paper path....PE-1
1.1.1 Paper feed to the exit tray....PE-1
1.2 Section configuration....PE-1
1.3 Configuration....PE-1
2. DRIVE....PE-3
2.1 Transportation to exit tray 1....PE-3
2.2 Transportation to exit tray 2....PE-3
2.3 Exit tray 2 shift mechanism....PE-3
3. OPERATION....PE-5
3.1 Exit tray 1....PE-5
3.1.1 Paper transport....PE-5
3.1.2 Paper full detection....PE-5
3.2 Exit tray 2....PE-6
3.2.1 Paper transport....PE-6
3.2.2 Paper shift mechanism....PE-6

PF THEORY OF OPERATION FS-533/PK-519.....PF-1
1. FINISHER OUTLINE.....PF-1
2. PAPER PATH.....PF-2
2.1 Sort offset mode/Group offset mode/Staple mode/Punch mode.....PF-2
2.2 Non sort mode/Non group mode/Non staple mode/Sort mode/Group mode/Punch mode.....PF-2
3. CONFIGURATION.....PF-3
3.1 Section configuration.....PF-3
3.1.1 Section configuration.....PF-4
3.2 Electrical part configuration.....PF-4
3.3 Main mechanical part configuration.....PF-5
3.4 Main roller configuration.....PF-5
4. UNIT OPEN/CLOSE SECTION.....PF-6
4.1 Unit open/close mechanism.....PF-6
4.1.1 Finisher unit lock mechanism.....PF-6
4.1.2 Punch unit lock mechanism (PK-519).....PF-7
5. PUNCH SECTION (PK-519).....PF-8
5.1 Configuration.....PF-8
5.1.1 Punch kit type.....PF-8
5.2 Drive.....PF-9
5.3 Operation.....PF-10
5.3.1 Skew correction mechanism.....PF-10
5.3.2 Punch control.....PF-11
5.3.3 Punch holes switch control.....PF-12
5.3.4 Punch dust full detection control.....PF-14
6. TRANSPORT SECTION.....PF-17
6.1 Configuration.....PF-17
6.2 Drive.....PF-17
6.2.1 Drive outline.....PF-17
6.2.2 Paper conveyance/receiving roller section drive.....PF-17
6.2.3 Paper exit roller section drive.....PF-18
6.3 Operation.....PF-20
6.3.1 Paper conveyance/receiving roller section paper transport control.....PF-20
6.3.2 Paper exit roller section paper transport control.....PF-20
6.3.3 Paper exit roller up/down control.....PF-22
6.3.4 Paper exit roller/lower drive connecting control.....PF-23
7. ALIGNMENT SECTION.....PF-25
7.1 Configuration.....PF-25
7.2 Drive.....PF-25
7.2.1 Drive outline.....PF-25
7.2.2 Alignment roller section.....PF-25
7.2.3 Alignment tray section.....PF-28
7.3 Operation.....PF-28
7.3.1 Paper alignment overview.....PF-28
7.3.2 Paper alignment control (paper FD alignment).....PF-28
7.3.3 Paper alignment control (paper CD alignment).....PF-29
7.3.4 Alignment tray paper detect control.....PF-31
8. STAPLER SECTION.....PF-33
8.1 Configuration/Drive.....PF-33
8.1.1 Stapler drive section top view.....PF-33
8.2 Operation.....PF-33
8.2.1 Stapler positioning control.....PF-33
8.2.2 Stapling control.....PF-33
8.2.3 Staple empty detection control.....PF-34
8.2.4 Clogged staple detection control.....PF-37
9. RECEIVING SECTION.....PF-38
9.1 Configuration.....PF-38
9.2 Drive.....PF-38
9.2.1 Drive outline.....PF-38
9.2.2 Tray lift-up section.....PF-38
9.2.3 Paper level detect section.....PF-39
9.2.4 Paper exit roller section.....PF-39
9.3 Operation.....PF-40
9.3.1 Paper exit paddle control.....PF-40
9.3.2 Paper exit tray lift-up control.....PF-41
9.3.3 Paper level detect control.....PF-41
PG THEORY OF OPERATION FS-534/PK-520/SD-511.....PG-1

1. FINISHER OUTLINE....PG-1
2. PAPER PATH....PG-2
2.1 Sub Tray....PG-2
2.2 Main tray....PG-3
2.3 Saddle tray....PG-3
2.4 3rd tray....PG-4
3. CONFIGURATION....PG-5
3.1 Section configuration....PG-5
3.2 Main electrical part configuration....PG-6
3.2.1 Control board, motor....PG-6
3.2.2 Sensor....PG-7
3.3 Main mechanical part configuration....PG-10
3.3.1 Overall configuration....PG-10
3.3.2 RU section (horizontal transport section)....PG-10
3.3.3 Paper feed/transport section, Alignment section, tray section....PG-11
3.3.4 Punch section, staple section, exit section....PG-11
3.3.5 Saddle section 1....PG-12
3.3.6 Saddle section 2....PG-12
3.4 Main roller configuration....PG-13
4. FNS SECTION....PG-14
4.1 Front door open/close detection mechanism....PG-14
5. RU SECTION (HORIZONTAL TRANSPORT SECTION)....PG-15
5.1 Configuration....PG-15
5.1.1 Exclusive parts....PG-16
5.2 Drive....PG-16
5.3 Operation....PG-17
5.3.1 Paper transport control....PG-17
5.3.2 RU section door open/close detection mechanism....PG-18
5.3.3 3rd exit tray full detection mechanism....PG-19
6. PUNCH SECTION (PK-520)....PG-20
6.1 Configuration....PG-20
6.1.1 Punch kit type....PG-21
6.2 Drive....PG-22
6.3 Operation....PG-23
6.3.1 Skew correction mechanism....PG-23
6.3.2 Puncher up/down status detection configuration....PG-24
6.3.3 Punch dust box full detection mechanism....PG-25
7. TRANSPORT SECTION....PG-28
7.1 Configuration....PG-28
7.1.1 Paper feed section - sub tray section....PG-28
7.1.2 Paper feed section - main tray section....PG-30
7.1.3 Main tray section - saddle section....PG-31
7.2 Drive....PG-32
7.2.1 FNS entry transport motor....PG-33
7.2.2 FNS discharge motor....PG-34
7.2.3 Receiving roller retraction motor....PG-34
7.3 Operation....PG-34
7.3.1 Paper path switching mechanism....PG-34
7.3.2 Receiving roller section up/down function....PG-36
7.3.3 Buffer control....PG-38
7.3.4 Sub tray exit mechanism....PG-40
8. ALIGNMENT SECTION....PG-42
8.1 Configuration....PG-42
8.1.1 Upper paddle section....PG-42
8.1.2 Exit section....PG-43
8.1.3 Stopper section (FD alignment section)....PG-44
8.1.4 Alignment tray section (CD alignment section)....PG-45
8.2 Drive....PG-45
8.2.1 Drive outline....PG-45
8.2.2 Upper paddle section....PG-45
8.2.3 Exit section....PG-47
8.2.4 Stopper section....PG-49
8.2.5 Alignment tray section....PG-50
8.3 Operation....PG-50
8.3.1 Paper transport control in alignment section....PG-50
9. STAPLER SECTION....PG-54
9.1 Configuration/Drive....PG-54
9.1.1 Configuration....PG-54

9.1.2 Drive....PG-54
9.2 Operation....PG-55
9.2.1 Stapler positioning control....PG-55
9.2.2 Stapling control....PG-55
9.2.3 Staple empty detection control....PG-57
9.2.4 Clogged staple detection control....PG-59
10. RECEIVING SECTION....PG-60
10.1 Configuration....PG-60
10.1.1 Configuration outline....PG-60
10.1.2 Main tray....PG-61
10.1.3 Sub tray....PG-62
10.1.4 3rd tray....PG-62
10.1.5 Saddle tray....PG-63
10.2 Drive....PG-63
10.2.1 Main tray section....PG-64
10.2.2 Sub tray section....PG-66
10.2.3 3re tray section....PG-66
10.2.4 Saddle tray section....PG-66
10.3 Operation....PG-66
10.3.1 Sub tray exit mechanism....PG-66
10.3.2 Main tray paper level detection control....PG-66
10.3.3 Main tray upper detection mechanism....PG-69
10.3.4 Tray full detection mechanism....PG-70
11. SADDLE SECTION SD-511....PG-73
11.1 Configuration....PG-73
11.2 Transport section....PG-74
11.2.1 Drive....PG-74
11.2.2 Paper transport....PG-74
11.2.3 Curl cover....PG-74
11.3 Alignment section....PG-76
11.3.1 Drive....PG-76
11.3.2 Alignment....PG-76
11.3.3 Stopper guide....PG-77
11.4 Stapler....PG-78
11.4.1 Drive....PG-78
11.4.2 Operation....PG-79
11.5 Folding/Saddle stitching....PG-80
11.5.1 Drive....PG-80
11.5.2 Folding knife....PG-80
11.6 Tri-folding....PG-82
11.6.1 Drive....PG-82
11.6.2 Tri-folding operation....PG-82
11.7 Exit section....PG-83
11.7.1 Drive....PG-83
11.7.2 Paper exit....PG-84
PH THEORY OF OPERATION EK-606/EK-607/SC-508....PH-1
1. EK-606....PH-1
1.1 Configuration....PH-1
1.2 Operation....PH-1
2. EK-607....PH-2
2.1 Configuration....PH-2
2.2 Operation....PH-2
3. SC-508....PH-3
3.1 Configuration....PH-3
3.2 Operation....PH-3
PI THEORY OF OPERATION UK-208/UK-209....PI-1
1. CONFIGURATION....PI-1
2. OPERATION....PI-2
2.1 Outline....PI-2
2.2 Connection metting....PI-2
2.2.1 Default setting....PI-2
PJ THEORY OF OPERATION FK-508/FK-511....PJ-1
1. COMMUNICATION CONTROL....PJ-1
1.1 FIF bits of DIS, DTC and DCS....PJ-1
1.1.1 FIF data configuration list (DIS/DTC)....PJ-1
1.1.2 FIF data configuration list (DCS)....PJ-5

1.2 Modem fallback sequence....PJ-9
1.2.1 V17, V29, and V27 ter....PJ-9
1.2.2 V34....PJ-9
1.3 V8/V34 sequence....PJ-9
1.3.1 V34....PJ-9
1.3.2 Sample of a signal procedure at sending two pages....PJ-10
1.3.3 Procedure details....PJ-10
1.3.4 Common signal bit definition....PJ-12
1.3.5 Phase 2 (Probing) ..... V.34 basic setting....PJ-13
1.3.6 Phase 3 .....Training of the main channel equalizer....PJ-14
1.3.7 Re-synchronization procedure / Startup procedure....PJ-16
1.3.8 Others....PJ-16
2. FUNCTION....PJ-18
2.1 Telephone function....PJ-18
2.1.1 TEL/FAX switching....PJ-18
2.2 F-code....PJ-18
2.2.1 Signal format....PJ-19
2.2.2 F-code confidential transmission....PJ-19
2.2.3 F-code bulletin board polling....PJ-20
2.2.4 F-code relay transmission....PJ-21
2.3 Transmission function....PJ-22
2.3.1 Original scan mode....PJ-22
2.4 Reception function....PJ-22
2.4.1 Reduction / division of reception....PJ-22
2.4.2 Cassette / paper selection....PJ-23
2.4.3 Compulsory memory reception....PJ-23
2.4.4 Closed reception (Junk FAX)....PJ-24
Q PARTS GUIDE MANUAL (1st Edition)....Q-1
INFORMATION FOR PARTS GUIDE MANUAL....Q-1
HOW TO MAKE THE BEST USE OF THIS MANUAL....Q-2
SYSTEM OUTLINE....Q-3
1. DIGITAL MFP B/W (bizhub 224e/284e/364e)....Q-5
DIAGRAMS OF MAIN PARTS SECTION....Q-5
1.1 EXTERNAL PARTS....Q-6
1.1.1 P1....Q-6
1.1.2 P2....Q-7
1.2 INNER COVER SECTION....Q-8
1.2.1 P3....Q-8
1.3 OPERATION PANEL SECTION....Q-9
1.3.1 P4....Q-9
1.4 IR COVER SECTION....Q-11
1.4.1 P5....Q-11
1.5 SCANNER SECTION....Q-12
1.5.1 P6....Q-12
1.5.2 P7....Q-13
1.5.3 P8....Q-14
1.6 PH UNIT....Q-15
1.6.1 P9....Q-15
1.7 TONER SUPPLY SECTION....Q-16
1.7.1 P10....Q-16
1.7.2 P11....Q-17
1.8 WASTE TONER BOX SECTION....Q-18
1.8.1 P12....Q-18
1.9 ERASE LAMP SECTION....Q-19
1.9.1 P13....Q-19
1.10 DV LOCK LEVER SECTION....Q-20
1.10.1 P14....Q-20
1.11 TRANSFER UNIT....Q-21
1.11.1 P15....Q-21
1.12 PAPER FEED SECTION....Q-22
1.12.1 P16....Q-22
1.13 1ST PAPER FEED SECTION....Q-23
1.13.1 P17....Q-23
1.13.2 P18....Q-24
1.14 2ND PAPER FEED SECTION....Q-25
1.14.1 P19....Q-25
1.14.2 P20....Q-27
1.15 CASSETTE RAIL SECTION....Q-28

1.15.1 P21....Q-28
1.16 PAPER SIZE DETECTION SECTION....Q-29
1.16.1 P22....Q-29
1.17 1ST CASSETTE SECTION....Q-30
1.17.1 P23....Q-30
1.17.2 P24....Q-31
1.18 2ND CASSETTE SECTION....Q-32
1.18.1 P25....Q-32
1.18.2 P26....Q-33
1.19 CONVEYANCE SECTION....Q-34
1.19.1 P27....Q-34
1.20 VERTICAL TRANSPORT SECTION....Q-36
1.20.1 P28....Q-36
1.20.2 P29....Q-37
1.21 VERTICAL CONVEYANCE DOOR SECTION....Q-38
1.21.1 P30....Q-38
1.22 BYPASS TRAY SECTION....Q-39
1.22.1 P31....Q-39
1.22.2 P32....Q-41
1.23 REVERSAL UNIT....Q-43
1.23.1 P33....Q-43
1.23.2 P34....Q-44
1.24 FUSING SECTION....Q-45
1.24.1 P35....Q-45
1.25 PAPER EXIT SECTION....Q-46
1.25.1 P36....Q-46
1.25.2 P37....Q-47
1.26 MAIN DRIVE/ PAPER FEED DRIVE SECTION....Q-48
1.26.1 P38....Q-48
1.27 TONER BOTTLE DRIVE SECTION....Q-50
1.27.1 P39....Q-50
1.28 FUSING DRIVE SECTION....Q-51
1.28.1 P40....Q-51
1.28.2 P41....Q-52
1.29 OZONE DUCT SECTION....Q-53
1.29.1 P42....Q-53
1.30 HIGH VOLTAGE SECTION....Q-54
1.30.1 P43....Q-54
1.31 MAIN POWER SUPPLY SECTION....Q-55
1.31.1 P44....Q-55
1.32 ELECTRICAL COMPONENTS....Q-56
1.32.1 P45....Q-56
1.32.2 P46....Q-57
1.33 WIRING....Q-58
1.33.1 P47....Q-58
1.33.2 P48....Q-59
1.34 WIRING ACCESSORIES AND JIGS....Q-60
1.34.1 P49....Q-60
1.35 ACCESSORY PARTS....Q-61
1.35.1 P50....Q-61
1.36 MAINTENANCE LIST....Q-62
1.37 DESTINATION....Q-63
2. DOCUMENT FEEDER (DF-624)....Q-64
2.1 EXTERNAL PARTS....Q-64
2.2 PAPER FEED TRAY SECTION....Q-66
2.3 PAPER TAKE-UP SECTION....Q-67
2.4 PAPER TRANSPORT SECTION....Q-70
2.5 WIRING ACCESSORIES AND JIGS....Q-77
2.6 ACCESSORY PARTS....Q-78
2.7 MAINTENANCE LIST....Q-78
2.8 DESTINATION....Q-78
3. DOCUMENT FEEDER (DF-701)....Q-80
3.1 EXTERNAL PARTS....Q-80
3.2 PAPER FEED TRAY SECTION....Q-82
3.3 PAPER TAKE-UP SECTION....Q-83
3.4 PAPER TRANSPORT SECTION....Q-86
3.5 CIS SECTION....Q-92
3.6 WIRIING ACCESSORIES AND JIGS....Q-97
3.7 ACCESSORY PARTS....Q-98
3.8 MAINTENANCE LIST....Q-98

3.9 DESTINATION....Q-98
4. OTHER OPTION (OC-511)....Q-100
4.1 OC-511....Q-100
4.2 DESTINATION....Q-100
5. SORTER/FINISHER (FS-533)....Q-102
5.1 FRAME SECTION....Q-102
5.2 EXTERNAL PARTS....Q-103
5.3 ELEVATE SECTION....Q-104
5.4 PAPER FEED/TRANSPORT SECTION....Q-105
5.5 ADJUSTMENT SECTION....Q-113
5.6 STAPLER SECTION....Q-116
5.7 DRIVE SECTION....Q-117
5.8 ELECTRICAL COMPONENTS....Q-118
5.9 WIRING ACCESSORIES AND JIGS....Q-119
5.10 DESTINATION....Q-119
6. SORTER/FINISHER (FS-534)....Q-121
6.1 EXTERNAL PARTS....Q-121
6.2 FRAME SECTION....Q-122
6.3 PAPER TRANSPORT SECTION....Q-123
6.4 ELEVATE SECTION....Q-129
6.5 STAPLER SECTION....Q-132
6.6 PAPER EXIT SECTION....Q-133
6.7 COMPILE SECTION....Q-137
6.8 HORIZONTAL TRANSPORT SECTION....Q-139
6.9 WIRING....Q-142
6.10 WIRING ACCESSORIES AND JIGS....Q-144
6.11 ACCESSORY PARTS....Q-145
6.12 DESTINATION....Q-145
7. SORTER/FINISHER (SD-511)....Q-147
7.1 EXTERNAL PARTS....Q-147
7.2 FRAME SECTION....Q-148
7.3 REAR FRAME SECTION....Q-149
7.4 PAPER CEASE SECTION....Q-150
7.5 PAPER TRANSPORT SECTION....Q-154
7.6 STAPLER SECTION....Q-155
7.7 ALIGNMENT SECTION....Q-156
7.8 PAPER EXIT TRAY SECTION....Q-159
7.9 WIRING....Q-160
7.10 WIRING ACCESSORIES AND JIGS....Q-162
7.11 ACCESSORY PARTS....Q-163
7.12 MAINTENANCE LIST....Q-163
7.13 DESTINATION....Q-163
8. OTHER OPTION (JS-506)....Q-165
8.1 SEPARATOR SECTION....Q-165
8.2 TRAY SECTION....Q-166
8.3 WIRING ACCESSORIES AND JIGS....Q-167
8.4 DESTINATION....Q-167
9. PUNCH UNIT (PK-519)....Q-169
9.1 PUNCH UNIT....Q-169
9.2 WIRING ACCESSORIES AND JIGS....Q-173
9.3 DESTINATION....Q-173
10. PUNCH UNIT (PK-520)....Q-175
10.1 PUNCH UNIT....Q-175
10.2 WIRING ACCESSORIES AND JIGS....Q-176
10.3 ACCESSORY PARTS....Q-177
10.4 DESTINATION....Q-177
11. PAPER FEEDER (PC-110)....Q-179
11.1 EXTERNAL PARTS....Q-179
11.2 FRAME SECTION....Q-180
11.3 PAPER FEED DRIVE SECTION....Q-181
11.4 CASSETTE SIZE SECTION....Q-182
11.5 PAPER TRANSPORT SECTION....Q-183
11.6 PAPER TAKE-UP SECTION....Q-184
11.7 3rd PAPER TRAY UNIT....Q-187
11.8 RECEIPT TRAY....Q-189
11.9 WIRING ACCESSORIES AND JIGS....Q-190
11.10 ACCESSORY PARTS....Q-191
11.11 MAINTENANCE LIST....Q-191

11.12 DESTINATION....Q-191
12. PAPER FEEDER (PC-210)....Q-193
12.1 EXTERNAL PARTS....Q-193
12.2 FRAME SECTION....Q-194
12.3 PAPER FEED DRIVE SECTION....Q-195
12.4 CASSETTE SIZE SECTION....Q-196
12.5 PAPER TRANSPORT SECTION....Q-197
12.6 PAPER TAKE-UP SECTION....Q-198
12.7 3rd PAPER TRAY UNIT....Q-201
12.8 4th PAPER TRAY UNIT....Q-203
12.9 WIRING ACCESSORIES AND JIGS....Q-205
12.10 ACCESSORY PARTS....Q-206
12.11 MAINTENANCE LIST....Q-206
12.12 DESTINATION....Q-207
13. PAPER FEEDER (PC-410)....Q-208
13.1 EXTERNAL PARTS....Q-208
13.2 FRAME SECTION....Q-209
13.3 PAPER FEED DRIVE SECTION....Q-210
13.4 PAPER TRANSPORT SECTION....Q-211
13.5 PAPER TAKE-UP SECTION....Q-212
13.6 PAPER TRAY UNIT....Q-215
13.7 WIRING ACCESSORIES AND JIGS....Q-219
13.8 ACCESSORY PARTS....Q-220
13.9 MAINTENANCE LIST....Q-220
13.10 DESTINATION....Q-220
14. OTHER OPTION (MK-730)....Q-222
14.1 MK-730....Q-222
14.2 DESTINATION....Q-222
15. OTHER OPTION (HT-510)....Q-224
15.1 HT-510....Q-224
15.2 WIRING ACCESSORIES AND JIGS....Q-225
15.3 DESTINATION....Q-225
16. FAX CONTROLLER (FK-511)....Q-227
16.1 FK-511....Q-227
16.2 DESTINATION....Q-227
17. OTHER OPTION (EK-606)....Q-229
17.1 EK-606....Q-229
17.2 WIRING ACCESSORIES AND JIGS....Q-230
17.3 DESTINATION....Q-230
18. OTHER OPTION (EK-607)....Q-232
18.1 EK-607....Q-232
18.2 WIRING ACCESSORIES AND JIGS....Q-233
18.3 DESTINATION....Q-233
19. OTHER OPTION (WT-506)....Q-235
19.1 WT-506....Q-235
19.2 WIRING ACCESSORIES AND JIGS....Q-236
19.3 DESTINATION....Q-236
20. OTHER OPTION (KP-101)....Q-238
20.1 KP-101....Q-238
20.2 DESTINATION....Q-238
21. OTHER OPTION (MK-735)....Q-240
21.1 MK-735....Q-240
21.2 DESTINATION....Q-240
22. OTHER OPTION (DK-705)....Q-242
22.1 DK-705....Q-242
22.2 ACCESSORY PARTS....Q-243
22.3 DESTINATION....Q-243
23. OTHER OPTION (DK-510)....Q-245
23.1 EXTERNAL PARTS....Q-245
23.2 ELECTRICAL COMPONENTS....Q-246
23.3 RECEIPT TRAY....Q-247
23.4 WIRING ACCESSORIES AND JIGS....Q-248
23.5 ACCESSORY PARTS....Q-249
23.6 DESTINATION....Q-249
24. OTHER OPTION (MK-719)....Q-251
24.1 MK-719....Q-251
24.2 WIRING ACCESSORIES AND JIGS....Q-252

24.3 DESTINATION....Q-252
25. SORTER/FINISHER (FS-534SD)....Q-254
25.1 EXTERNAL PARTS....Q-254
25.1.1 P1....Q-254
25.2 FRAME SECTION....Q-255
25.2.1 P2....Q-255
25.3 PAPER TRANSPORT SECTION....Q-256
25.3.1 P3....Q-256
25.3.2 P4....Q-258
25.3.3 P5....Q-259
25.3.4 P6....Q-260
25.4 ELEVATE SECTION....Q-262
25.4.1 P7....Q-262
25.4.2 P8....Q-263
25.5 STAPLER SECTION....Q-264
25.5.1 P9....Q-264
25.6 PAPER EXIT SECTION....Q-266
25.6.1 P10....Q-266
25.6.2 P11....Q-267
25.6.3 P12....Q-268
25.7 COMPILE SECTION....Q-269
25.7.1 P13....Q-269
25.7.2 P14....Q-270
25.8 HORIZONTAL TRANSPORT SECTION....Q-272
25.8.1 P15....Q-272
25.8.2 P16....Q-273
25.8.3 P17....Q-274
25.9 EXTERNAL PARTS....Q-275
25.9.1 P18....Q-275
25.10 FRAME SECTION....Q-276
25.10.1 P19....Q-276
25.11 REAR FRAME SECTION....Q-277
25.11.1 P20....Q-277
25.12 PAPER CEASE SECTION....Q-278
25.12.1 P21....Q-278
25.12.2 P22....Q-279
25.12.3 P23....Q-280
25.13 PAPER TRANSPORT SECTION....Q-282
25.13.1 P24....Q-282
25.14 STAPLER SECTION....Q-283
25.14.1 P25....Q-283
25.15 ALIGNMENT SECTION....Q-284
25.15.1 P26....Q-284
25.15.2 P27....Q-285
25.16 PAPER EXIT TRAY SECTION....Q-287
25.16.1 P28....Q-287
25.17 WIRING....Q-288
25.17.1 P29....Q-288
25.17.2 P30....Q-289
25.17.3 P31....Q-290
25.17.4 P32....Q-291
25.18 WIRING ACCESSORIES AND JIGS....Q-292
25.18.1 P33....Q-292
25.19 ACCESSORY PARTS....Q-293
25.19.1 P34....Q-293
25.20 MAINTENANCE LIST....Q-293
25.21 DESTINATION....Q-294
26. OTHER OPTION (FK-508)....Q-295
26.1 FAX KIT....Q-295
26.2 DESTINATION....Q-295
27. OTHER OPTION (MK-728)....Q-297
27.1 MK-728....Q-297
27.1.1 P1....Q-297
27.2 WIRING ACCESSORIES AND JIGS....Q-298
27.2.1 P2....Q-298
27.3 DESTINATION....Q-298
S LAYOUT DRAWINGS FOR RELATED PARTS BY EACH TROUBLE CODE....S-1
1. C0002, C4802, C5601, CC15C, CEEE3....S-1

2. C0106....S-2
2.1 PC-110/PC-210....S-2
2.2 PC-410....S-3
3. C0107....S-4
3.1 PC-110/PC-210....S-4
3.2 PC-410....S-5
4. C0108....S-6
5. C0109....S-7
6. C0202....S-8
7. C0204....S-9
8. C0206....S-10
9. C0208....S-11
10. C0210....S-12
11. C0211....S-13
12. C0214....S-14
13. C1004, CC155....S-15
14. C1081....S-16
15. C1102....S-17
15.1 FS-533....S-17
15.2 FS-534....S-18
16. C1103....S-19
16.1 FS-533....S-19
16.2 FS-534....S-20
17. C1105....S-21
17.1 FS-534....S-21
18. C1106....S-22
18.1 FS-533....S-22
18.2 FS-534....S-23
19. C1109....S-24
19.1 FS-533....S-24
19.2 FS-534....S-25
20. C1112....S-26
21. C1113....S-27
22. C1114....S-28
23. C1115....S-29
24. C1132....S-30
24.1 FS-533/PK-519....S-30
24.2 FS-534/PK-520....S-31
25. C1140....S-32
25.1 FS-533....S-32
25.2 FS-534....S-33
26. C1141....S-34
27. C1144....S-35
28. C1145....S-36
29. C1156....S-37
30. C1182....S-38
31. C1184....S-39
32. C1195....S-40
33. C1196....S-41
33.1 FS-534....S-41
34. C1197....S-42
34.1 FS-534....S-42
35. C11A1....S-43
36. C11A2....S-44
37. C11E1....S-45
38. C1402....S-46
39. C2355....S-47
40. C2414, C2558, C2564....S-48
41. C2557....S-49

42. C255C....S-50
43. C2650....S-51
44. C2A14....S-52
45. C3101....S-53
46. C3201, C3202....S-54
47. C3302....S-55
48. C3425....S-56
49. C3722, C3922....S-57
50. C3725, C3825, C3925....S-58
51. C3726, C3826....S-59
52. C3926....S-60
53. C4091....S-61
54. C4101....S-62
55. C4501....S-63
56. C4801, CC163....S-64
57. C5102, C5103....S-65
58. C5351....S-66
59. C5354....S-67
60. C5355....S-68
61. C5370....S-69
62. C5372, C6901, C6902, C6903, CA051, CA052, CA053, CC170 - CC186, CC191 - CC214, CC216, CD211, CD212, CD241, CD242, CD261, CD262, CD271, CD401 - CD413, CE001, CE003 - CE305, CEEE1....S-70
63. C5501....S-71
64. C5603....S-72
65. C6001....S-73
66. C6002....S-74
67. C6102, C6103....S-75
68. C6104, C6105....S-76
69. C6704, C6752, CDF50, CDF70, CDFA0....S-77
70. C6751....S-78
71. C6753....S-79
72. C6754, C6755, C9403, C9404....S-80
73. C6756....S-81
74. C6911, C6912, C6913, CDF51, CDF71, CDFA1....S-82
75. C6F01....S-83
76. C8101....S-84
    76.1 DF-624....S-84
    76.2 DF-701....S-85
77. C8107....S-86
    77.1 DF-624....S-86
    77.2 DF-701....S-87
78. C8302....S-88
    78.1 DF-624....S-88
    78.2 DF-701....S-89
79. C8401, CC156, CC165....S-90
80. C9401, C9402....S-91
81. CC001....S-92
82. CC15B....S-93
83. CC164....S-94
84. CC190, CD002, CD004, CD00F, CD020....S-95
85. CD010, CD272, CE002....S-96
86. CD011, CD012, CD030, CD041 - CD04B....S-97
87. CD201, CD202, CD203....S-98
88. CD3A0....S-99
89. CED01....S-100
90. CEEE2....S-101

Revision history

No.	ID	Title	Ver.	Descriptions of revision	Date
1	-	Section Q	-	Add to the section Q(Parts guide manual 1st edition)	2013/09/13
2	-	K.3.5.1 to K.3.17.9	-	The explanation was modified.	2013/10/23
3	-	Section S	-	Add to the section S.	2013/10/23
4	D0001125423	F.6.6.3 Replacing the transfer belt unit	3	The explanation was modified.	2013/11/26
5	D0001127128	I.11.17.2 Machine Management List	3	The explanation was modified.	2013/11/27
6	D0001127537	I.14.4.1 Basic mode	3	The explanation was modified.	2013/11/27
7	D0001126369	I.7.23.3 Custom Function Pattern Selection	2	The explanation was modified.	2013/11/27
8	D0001127706	K.1.11.1 92-01, 92-02, 92-40	3	The explanation was modified.	2013/11/27
9	D0001127708	K.1.11.2 93-10	3	The explanation was modified.	2013/11/27
10	D0001127654	K.1.8.2 32-01, 32-05	3	The explanation was modified.	2013/11/27
11	D0001128397	K.16.2.1 bizhub 364e/284e/224e	3	The explanation was modified.	2013/11/27
12	D0001127849	K.3.7.3 C2557	3	The explanation was modified.	2013/11/27
13	D0001127853	K.3.7.5 C255C	3	The explanation was modified.	2013/11/27
14	D0001127862	K.3.8.1 C3101	3	The explanation was modified.	2013/11/27
15	D0001128073	K.4.12 CFA##	2	The explanation was modified.	2013/11/27
16	D0001128215	K.7.1 Display procedure	2	The explanation was modified.	2013/11/27
17	D0001128414	L.1.1.1 Scanner section	3	The explanation was modified.	2013/11/27
18	D0001199645	Q.1.22 BYPASS TRAY SECTION	2	The explanation was modified.	2013/11/27

A SAFETY AND IMPORTANT WARNING ITEMS

Read carefully the safety and important warning items described below to understand them before doing service work.

1. IMPORTANT NOTICE

- Because of possible hazards to an inexperienced person servicing this product as well as the risk of damage to the product, KONICA MINOLTA, INC. (hereafter called KM) strongly recommends that all servicing be performed only by KM-trained service technicians.
- Changes may have been made to this product to improve its performance after this Service Manual was printed. Accordingly, KM does not warrant, either explicitly or implicitly, that the information contained in this service manual is complete and accurate.
- The user of this service manual must assume all risks of personal injury and/or damage to the product while servicing the product for which this service manual is intended. Therefore, this service manual must be carefully read before doing service work both in the course of technical training and even after that, for performing maintenance and control of the product properly.
- Keep this service manual also for future service.

2. DESCRIPTION ITEMS FOR DANGER, WARNING AND CAUTION

2.1 Description items in this Service Manual

In this Service Manual, each of three expressions "⚠DANGER", "⚠WARNING", and "⚠ CAUTION" are defined as follows.
When servicing the product, the relevant works (disassembling, reassembling, adjustment, repair, maintenance, etc.) need to be conducted with utmost care.

⚠ DANGER	: Action having a high possibility of suffering death or serious injury
⚠ WARNING	: Action having a possibility of suffering death or serious injury
⚠ CAUTION	: Action having a possibility of suffering a slight wound and property damage

2.2 Description items for safety and important warning items

Symbols used for safety and important warning items are defined as follows:


: Precaution when servicing the product.


: Prohibition when servicing the product.


: Direction when servicing the product.


General precaution


Electric hazard


High temperature


General prohibition


Do not touch with wet hand


Do not disassemble


General instruction


Unplug


Ground/Earth

Illustrations representing the power plug and wall outlet used in the following descriptions are only typical. Their shapes differ depending on the country or region.

3. SAFETY WARNINGS

3.1 MODIFICATIONS NOT AUTHORIZED BY KONICA MINOLTA, INC.

KONICA MINOLTA brand products are renowned for their high reliability. This reliability is achieved through high-quality design and a solid service network.
Product design is a highly complicated and delicate process where numerous mechanical, physical, and electrical aspects have to be taken into consideration, with the aim of arriving at proper tolerances and safety factors. For this reason, unauthorized modifications involve a high risk of degradation in performance and safety. Such modifications are therefore strictly prohibited. the points listed below are not exhaustive, but they illustrate the reasoning behind this policy.

3.1.1 Actions requiring special attention

⚠WARNING

- Do not make any modifications to the product unless otherwise instructed by KM.
- Do not use any part not specified by KM.

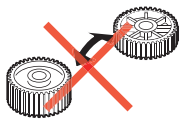

- Do not use any power cord or power plug not specified by KM.



- Use only the protective fuses specified by KM.
  Use of any type of fuse or related part not specified by KM makes safety devices inoperative which may result in a fire from high heat.

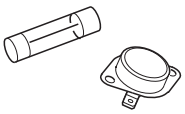

- Do not disable fuse functions or use a wire, metal clip, solder, or other conductor in place of the fuse.
  Fire may result from high heat.

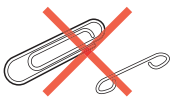

- Do not disable relay functions (for example, inserting a piece of paper between relay contacts to hamper circuit action.)
  Fire may result from high heat.

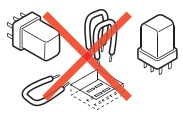

⚠WARNING

- Do not disable safety functions (for example, interlocks and safety circuits).
  Safety devices become inoperative, resulting in fire from high heat, electric shock, or injury.

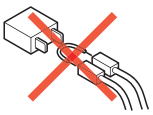

3.2 POWER PLUG SELECTION

In some countries or areas, the power plug provided with the product may not fit the wall outlet used in the area. In that case, it is the obligation of the customer engineer (hereafter called the CE) to attach the appropriate power plug or power cord set in order to connect the product to the supply.

3.2.1 Power Cord Set or Power Plug

⚠WARNING

- Use a power supply cord set which meets the following criteria:
  - provided with a plug having configuration intended for the connection to wall outlet appropriate for the product's rated voltage and current, and
  - the plug has pin/terminal(s) for grounding, and
  - provided with three-conductor cable having enough current capacity, and
  - the cord set meets regulatory requirements for the area.

  Use of inadequate cord set leads to fire or electric shock.



⚠WARNING

- Attach power plug which meets the following criteria:
  - having configuration intended for the connection to wall outlet appropriate for the product's rated voltage and current, and
  - the plug has pin/terminal(s) for grounding, and
  - meets regulatory requirements for the area.

  Use of inadequate cord set leads to the product connecting to inadequate power supply (voltage, current capacity, grounding), and may result in fire or electric shock.

- The wires in the power supply cord shall be connected to the terminals of the plug in accordance with the following:

Color of the wire		Terminal of the plug
Brown	Black	Marked with "L", "A" or "W" or colored RED
Light Blue	White	Marked with "N" or colored BLACK
Green-and-Yellow		Marked with "E", "PE" or " ⏚ " or colored GREEN or GREEN-AND-YELLOW

- Wrong connection may cancel safeguards within the product, and results in fire or electric shock.

3.3 CHECKPOINTS WHEN PERFORMING ON-SITE SERVICE

KONICA MINOLTA brand products are extensively tested before shipping, to ensure that all applicable safety standards are met, in order to protect the customer and customer engineer (hereafter called the CE) from the risk of injury. However, in daily use, any electrical equipment may be subject to parts wear and eventual failure. In order to maintain safety and reliability, the CE must perform regular safety checks.

3.3.1 Power Supply

(1) Connection to Power Supply

⚠WARNING

- The power outlet should have a capacity of at least the maximum power consumption and be dedicated only to the product.
  The current that can be passed through the outlet is limited and any current exceeding the limit could result in fire.



- If the wall outlet has two or more receptacles and the product and another electrical appliance are plugged into this wall outlet, make sure that the total load does not exceed the rating of the wall outlet. The current that can be passed through the outlet is limited and any current exceeding the limit could result in a fire.

- Do not use any conversion plug adapter even if the power plug shape does not match your wall outlet.
  The shapes of the power plug and the wall outlet are set according to the voltage and allowable current. Use of a conversion plug adapter could result in an abnormal voltage or insufficient current capacity, leading to a fire. It may also result in an electric shock due to a grounding failure.
  If the plug shape does not match the wall outlet, request the user to perform power source installation work.

WARNING

- Make sure the power cord is plugged into the wall outlet securely.
  If the power plug is left loose in the wall outlet, contact failure may occur, leading to abnormal heating of the power plug and a risk of fire.

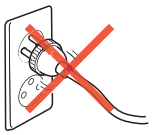

(2) Ground Connection

WARNING

- Check whether the product is grounded properly.
  If current leakage occurs in an ungrounded product, you may suffer electric shock while operating the product.
  Connect power plug to grounded wall outlet.

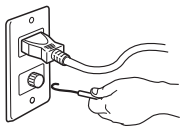

- Make sure of correct ground connection.
  If the grounding wire is connected to an inappropriate part, there is a risk of explosion or electric shock. Do not connect the grounding wire to any of the following parts:
  a. Gas pipe: Gas explosion or fire may result.
  b. Lightning rod: Risk of electric shock or fire during lightning.
  c. Grounding wire for telephone line: Risk of electric shock or fire during lightning.
  d. Water pipe and faucet: These parts do not serve as a ground connection because of a plastic part that is very often installed midway within the water pipe.

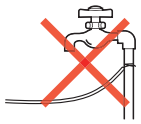

(3) Power Plug and Cord

WARNING	
• When using the power cord set (inlet type) that came with this product, make sure the connector is securely inserted in the inlet of the product. When a securing measure is provided, secure the cord with the fixture properly. If the power cord (inlet type) is not connected to the product securely, a contact problem may lead to increased resistance, overheating, and risk of fire.	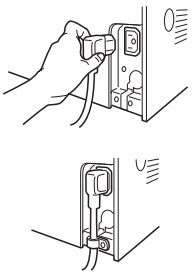
• Do not allow the power cord to be stepped on or pinched. Overheating may occur there, leading to a risk of fire.	
• Check whether the power cord is damaged. Check whether the sheath is damaged. If the power plug, cord, or sheath is damaged, replace with a new power cord (with plug and connector on each end) specified by KMBT. Using the damaged power cord may result in fire or electric shock.	
• Do not bundle or tie the power cord. Overheating may occur there, leading to a risk of fire.	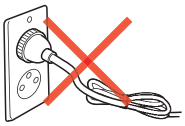
• Check whether dust is collected around the power plug and wall outlet. Using the power plug and wall outlet without removing dust may result in fire.	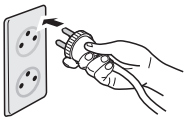
• Do not insert the power plug into the wall outlet with a wet hand. The risk of electric shock exists.	

⚠WARNING

- When unplugging the power cord, grasp the plug, not the cable.
  The cable may be broken, leading to a risk of fire and electric shock.

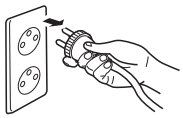

(4) Wiring

⚠WARNING

- Never use multi-plug adapters to plug multiple power cords in the same outlet.
  If used, the risk of fire exists.

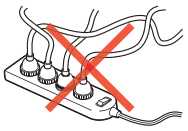

- When an extension cord is required, use one that meets the rated current, rated voltage, and the relevant safety standards of the country.
  Current that can be passed through the extension cable is limited and fire may result from the use of an inappropriate type of an extension cable.
  Do not use an extension cable reel with the cable taken up. Fire may result.



3.3.2 Installation Requirements

(1) Prohibited Installation Places

⚠WARNING

- Do not place the product near flammable materials or volatile materials that may catch fire.
  A risk of fire exists.



- Do not place the product in a place exposed to water such as rain.
  A risk of fire and electric shock exists.

(2) When not Using the Product for a long time

⚠WARNING

- When the product is not to be used for an extended period of time (for holidays, for example), instruct the user to turn OFF the power switch and unplug the power cord from the power outlet.
  Dust collected around the power plug and outlet may cause fire.

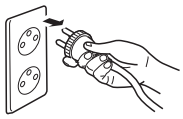

(3) Ventilation

⚠CAUTION

- The product generates ozone gas during operation.
  If the smell of ozone is present in the following cases, ventilate the room.
  a. When the product is used in a poorly ventilated room
  b. When making a lot of copies
  c. When using multiple products at the same time



(4) Stability

⚠ CAUTION

- Be sure to lock the caster stoppers.
  In the case of an earthquake, the product may slide, leading to an injury.

3.3.3 After Service

(1) Inspection before Servicing

⚠ WARNING



- Before conducting an inspection, read all relevant documentation (service manual, technical notices, etc.) and proceed with the inspection following the prescribed procedure using the recommended personal safety equipment and using only the prescribed tools.
  Do not make any adjustment not described in the documentation.
  If the prescribed procedure or tool is not used, the product may break and a risk of injury or fire exists.





- Before conducting an inspection, be sure to disconnect the power plugs from the Main Body and Accessories (Options).
  When the power plug is inserted into the wall outlet, some units are still powered even if the POWER switch is turned OFF.
  A risk of electric shock exists.

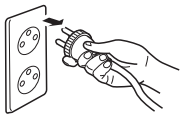

⚠ CAUTION



- The area around the fixing unit is hot.
  You may get burned.

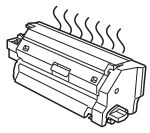

⚠CAUTION

- Do not leave the machine unattended during transportation, installation, and/or inspection.
  If the machine is left unattended, face protrusions toward the wall or take other necessary precautions to prevent a user or other person in the area from stumbling over a protrusion of the machine or being caught by a cable, possibly causing a fall to the floor or other personal injury.

(2) Work Performed with the Product Powered On

⚠WARNING

- Take every care when making adjustments or performing an operation check with the product powered.
  If you make adjustments or perform an operation check with the external cover detached, you may touch live or high-voltage parts or you may be caught in moving gears or the timing belt, leading to a risk of injury.

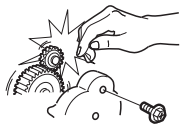

- Take every care when servicing with the external cover detached.
  High-voltage exists around the drum unit. A risk of electric shock exists.
- If it is absolutely necessary to service the machine with the door open or external covers removed, always be attentive to the motion of the internal parts.
  A normally protected part may cause unexpected hazards.

⚠CAUTION

- Do not keep gazing at a lamp light during the service procedure with the product powered ON.
  Eyestrain may result.

(3) Safety Checkpoints

⚠WARNING

- When a product fault is reported from a user, check parts and repair the fault appropriately with safety in mind.
  A damaged product, personal injury, or fire may result.

- Whenever mounting an option on the machine, be attentive to the motion of the other workers performing the task.
  Another worker may be injured by a pinch point between the machine and the option.

- When mounting an option on the machine, be careful about the clearance between the machine and the option.
  You may be injured with your finger or hand pinched between the machine and the option.

- When removing a part that secures a motor, gear, or other moving part, disassembling a unit, or reinstalling any of such parts and units, be careful about moving parts and use care not to drop any part or unit. During the service procedure, give sufficient support for any heavy unit.
  You may be injured by a falling part or unit.

WARNING

- Check the external covers and frame for possible sharp edges, burrs, and damage.
  They can be a cause of injury during use or servicing.

- When accessing a hard-to-view or narrow spot, be careful about sharp edges and burrs on the frame and parts.
  They may injure your hands or fingers.

- Do not allow any metal parts such as clips, staples, and screws to fall into the product.
  They can short internal circuits and cause electric shock or spark bursting into flame.

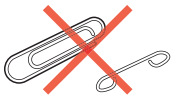

- Check wiring for pinched and any other damage.
  Current can leak, leading to a risk of electric shock or fire.

- Check high-voltage cables and sheaths for any damage.
  Damage may lead to product failure and/or the risk of fire.



- Do not disassemble or adjust the write unit (PH unit) incorporating a laser.
  The laser light can enter your eye, leading to a risk of loss of eyesight.

- Do not supply power with the write unit (PH unit) shifted from the specified mounting position.
  The laser light can enter your eye, leading to a risk of loss of eyesight.

- After replacing a part to which AC voltage is applied (e.g., optical lamp and fixing lamp), be sure to check the installation state.
  A risk of fire exists.

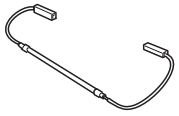

WARNING

- Check the interlock switch and actuator for loosening and check whether the interlock functions properly.
  If the interlock does not function, you may receive an electric shock or be injured when you insert your hand in the product (e.g., for clearing paper jam).

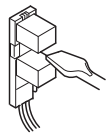

- Make sure the wiring cannot come into contact with sharp edges, burrs, or other pointed parts.
  Damage may lead to the risk of electric shock or fire.



- Make sure that all screws, components, wiring, connectors, etc. that were removed for safety check and maintenance have been reinstalled in the original location. (Pay special attention to forgotten connectors, pinched cables, forgotten screws, etc.)
  A risk of product trouble, personal injury, electric shock, and fire exists.



- Never use any flammable or combustible spray, fluid, gas, or similar substance in and around the product.
  Do not use any flammable or combustible dust spray, in particular, to clean the interior of the product.
  Fire or explosion may result.



CAUTION

- Carefully remove all toner remnants and dust from electrical parts and electrode units such as a charging corona unit.
  Toner remnants and dust may lead to product failure and/or the risk of fire.

⚠CAUTION

- Check electrode units such as a charging corona unit for deterioration and signs of leakage.
  Damage may lead to product failure and/or the risk of fire.

- When replacing a battery, replace it with a new one as specified.
  Dispose of the used battery as instructed on its packaging or by local ordinance.
  There is a risk of explosion if the battery is replaced with an incorrect type.

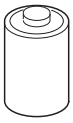

(4) Handling of Consumables

⚠WARNING

- For handling of consumables (toner, developer, photoconductor, etc.) and their storage precautions, see MSDS.

(5) Handling of Service Materials

⚠ CAUTION

- Handle with care according to MSDS.
  Use of solvent may involve explosion, fire, or personal injury.



3.4 FUSE

CAUTION Double pole / neutral fusing
ATTENTION Double pôle / fusible sur le neutre.

3.5 Used Batteries Precautions

3.5.1 ALL Areas

CAUTION

Danger of explosion if battery is incorrectly replaced.
Replace only with the same or equivalent type recommended by the manufacturer.
Dispose of used batteries according to the manufacturer's instructions.

3.5.2 Germany

VORSICHT!

Explosionsgefahr bei unsachgemäßem Austausch der Batterie.
Ersatz nur durch denselben oder einen vom Hersteller empfohlenen gleichwertigen Typ.
Entsorgung gebrauchter Batterien nach Angaben des Herstellers.

3.5.3 France

ATTENTION

Il y a danger d'explosion s'il y a remplacement incorrect de la batterie.
Remplacer uniquement avec une batterie du même type ou d'un type équivalent recommandé par le constructeur.
Mettre au rebut les batteries usagées conformément aux instructions du fabricant.

3.5.4 Denmark

ADVARSEL!

Lithiumbatteri - Eksplosionsfare ved fejlagtig håndtering.
Udskiftning må kun ske med batteri af samme fabrikat og type.
Levér det brugte batteri tilbage til leverandøren.

3.5.5 Finland, Sweden

VAROITUS

Paristo voi räjähtää, jos se on virheellisesti asennettu.
Vaihda paristo ainoastaan laitevalmistajan suosittelemaan tyyppiin.
Hävitä käytetty paristo valmistajan ohjeiden mukaisesti.

VARNING

Explosionsfara vid felaktigt batteribyte.
Använd samma batterityp eller en ekvivalent typ som rekommenderas av apparattillverkaren.
Kassera använt batteri enligt fabrikantens instruktion.

3.5.6 Norway

ADVARSEL

Eksplosjonsfare ved feilaktig skifte av batteri.
Benytt samme batteritype eller en tilsvarende type anbefalt av apparatfabrikanten.
Brukte batterier kasseres i henhold til fabrikantens instruksjoner.

3.6 Laser Safety

3.6.1 Laser Safety

This is a digital machine certified as a Class 1 laser product. There is no possibility of danger from a laser, provided the machine is serviced according to the instruction in this manual.

3.6.2 Internal Laser Radiation

- This product employs a Class 3B laser diode that emits an invisible laser beam. The laser diode and the scanning polygon mirror are incorporated in the print head unit.
- The print head unit is NOT A FIELD SERVICEABLE ITEM. Therefore, the print head unit should not be opened under any circumstances.

semiconductor laser	
Maximum power of the laser diode	15mW
Maximum average radiation power (*)	7.4μW
Wavelength	770 to 800 nm

*at laser aperture of the Print Head Unit

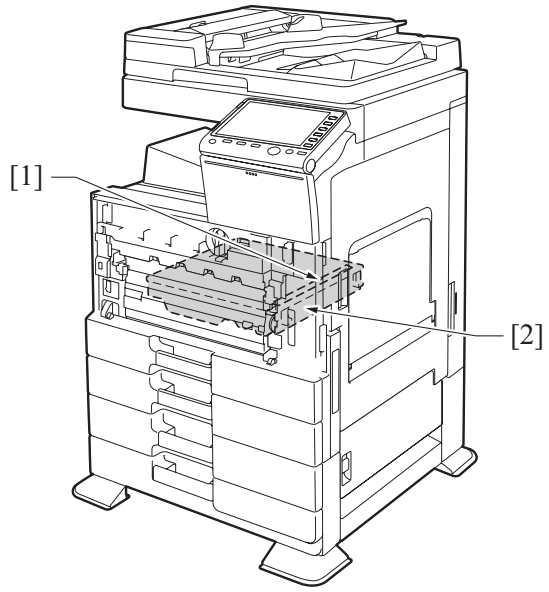

[1] Laser Aperture of the Print Head Unit	[2] Print Head Unit

(1) U.S.A., Canada (CDRH Regulation)

- This machine is certified as a Class 1 Laser product under Radiation Performance Standard according to the Food, Drug and Cosmetic Act of 1990. Compliance is mandatory for Laser products marketed in the United States and is reported to the Center for Devices and Radiological Health (CDRH) of the U.S. Food and Drug Administration of the U.S. Department of Health and Human Services (DHHS). This means that the device does not produce hazardous laser radiation.
- The label shown on "A.3.6.3 Laser Safety Label" indicates compliance with the CDRH regulations and must be attached to laser products marketed in the United States.

⚠CAUTION

Use of controls, adjustments or performance of procedures other than those specified in this manual may result in hazardous radiation exposure.

semiconductor laser	
Maximum power of the laser diode	15 mW
Wavelength	770 to 800 nm

(2) All Areas

⚠ CAUTION

Use of controls, adjustments or performance of procedures other than those specified in this manual may result in hazardous radiation exposure.

semiconductor laser	
Maximum power of the laser diode	15 mW
Wavelength	770 to 800 nm

(3) Denmark

⚠ADVARSEL

Usynlig laserstråling ved åbning, når sikkerhedsafbrydere er ude af funktion. Undgå udsættelse for stråling. Klasse 1 laser produkt der opfylder IEC60825-1 sikkerheds kravene.

halvlederlaser	
Laserdiodens højeste styrke	15 mW
bølgelængden	770 to 800 nm

(4) Finland, Sweden

LUOKAN 1 LASERLAITE
KLASS 1 LASER APPARAT

⚠VAROITUS!

Laitteen käyttäminen muulla kuin tässä käyttöohjeessa mainitulla tavalla saattaa altistaa käyttäjän turvallisuusluokan 1 ylittävälle näkymättömälle lasersäteilylle.

puolijohdelaser	
Laserdiodin suurin teho	15 mW
aallonpituus	770 to 800 nm

⚠VARNING!

Om apparaten används på annat sätt än i denna bruksanvisning specificerats, kan användaren utsättas för osynlig laserstrålning, som överskrider gränsen för laserklass 1.

halvledarlaser	
Den maximala effekten för laserdioden	15 mW
våglängden	770 to 800 nm

⚠VARO!

Avattaessa ja suojalukitus ohitettaessa olet alttiina näkymättomälle lasersäteilylle. Älä katso säteeseen.

⚠ VARNING!

Osynlig laserstråining när denna del är öppnad och spärren är urkopplad. Betrakta ej stråien.

(5) Norway

⚠ ADVERSEL
Dersom apparatet brukes på annen måte enn spesifisert i denne bruksanvisning, kan brukeren utsettes for unsynlig laserstrålning, som overskrider grensen for laser klass 1.

halvleder laser	
Maksimal effekt till laserdiode	15 mW
bølgelengde	770 to 800 nm

3.6.3 Laser Safety Label

A laser safety label is attached to the outside of the machine as shown below.

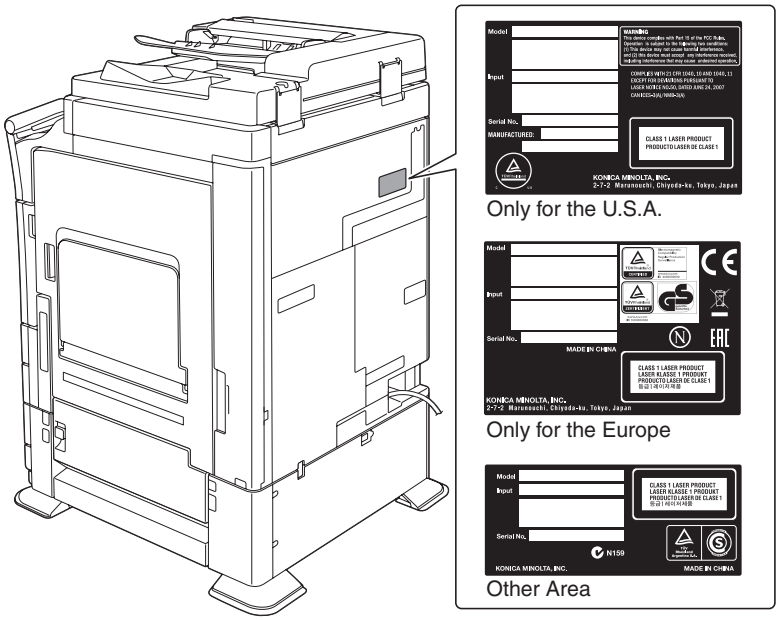

3.6.4 Laser Caution Label

A laser caution label is attached to the inside of the machine as shown below.

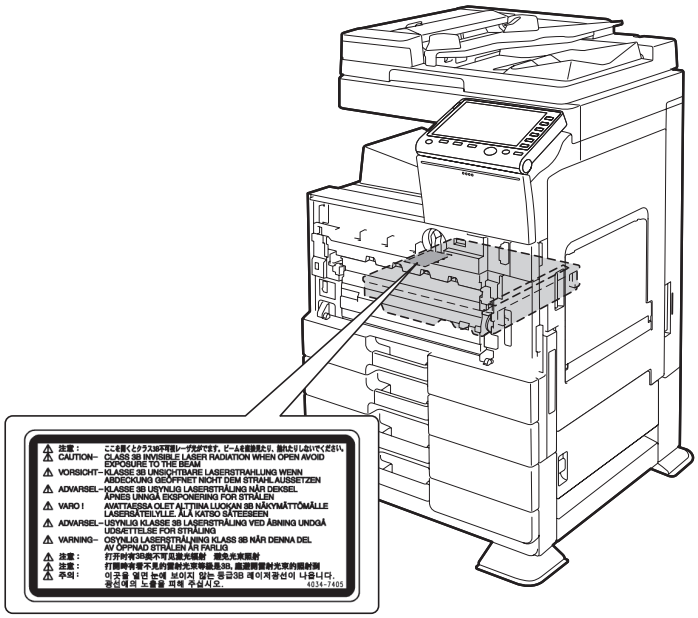

3.6.5 PRECAUTIONS FOR HANDLING THE LASER EQUIPMENT

- Be sure to unplug the power cord whenever performing a service job in the laser beam path (around the PH unit).
- If it is absolutely unavoidable to perform a service job with the power cord plugged in, strictly observe the following precautions:
  1. Before starting the service job, take off your watch, ring, and other reflective articles and be sure to wear laser protective goggles.
  2. Keep other personnel away from the work site.
  3. Do not bring any highly reflective tool into the laser beam path during the service procedure.

4. WARNING INDICATIONS ON THE MACHINE

Caution labels shown are attached in some areas on/in the machine.
When accessing these areas for maintenance, repair, or adjustment, special care should be taken to avoid burns and electric shock.

4.1 Warning indications inside the machine

⚠CAUTION
You may be burned or injured if you touch any area that you are advised not to touch by any caution label. Do not remove caution labels. If any caution label has come off or soiled and therefore the caution cannot be read, contact our service office.

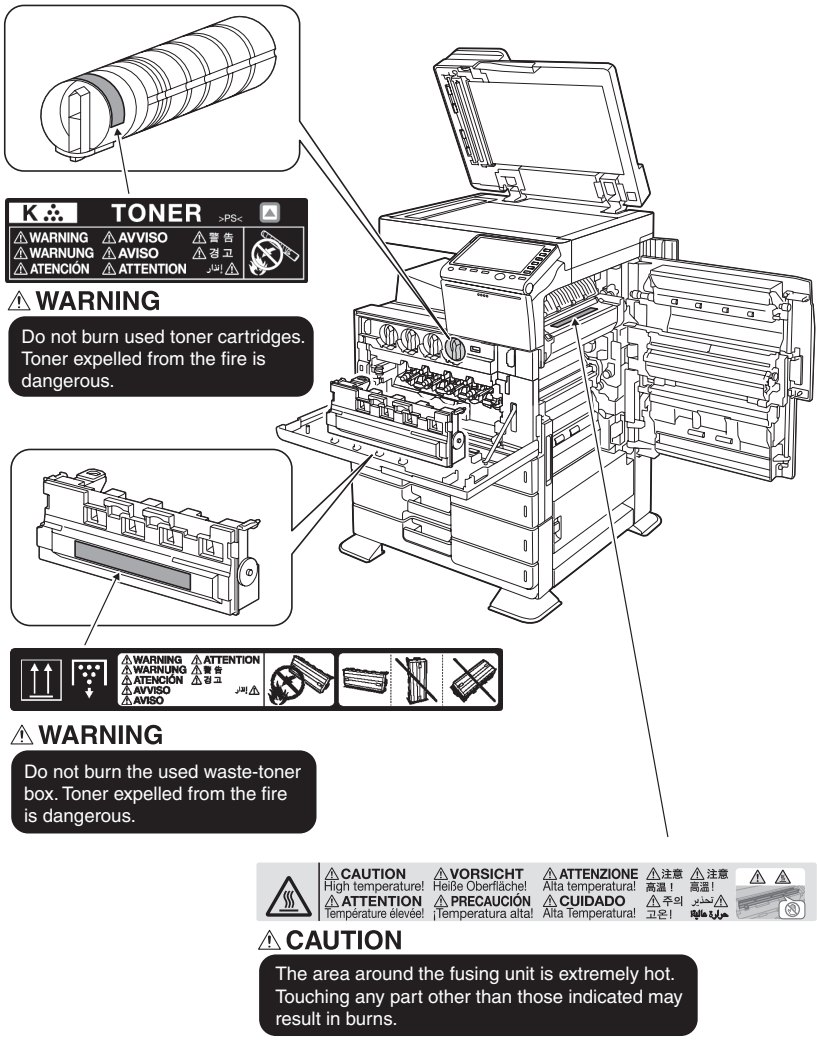

4.2 Warning indications on the boards

WARNING

- To avoid electric shock, after turning OFF the power switch, do not touch the hazards area on DC power supply unit for 180 minutes.

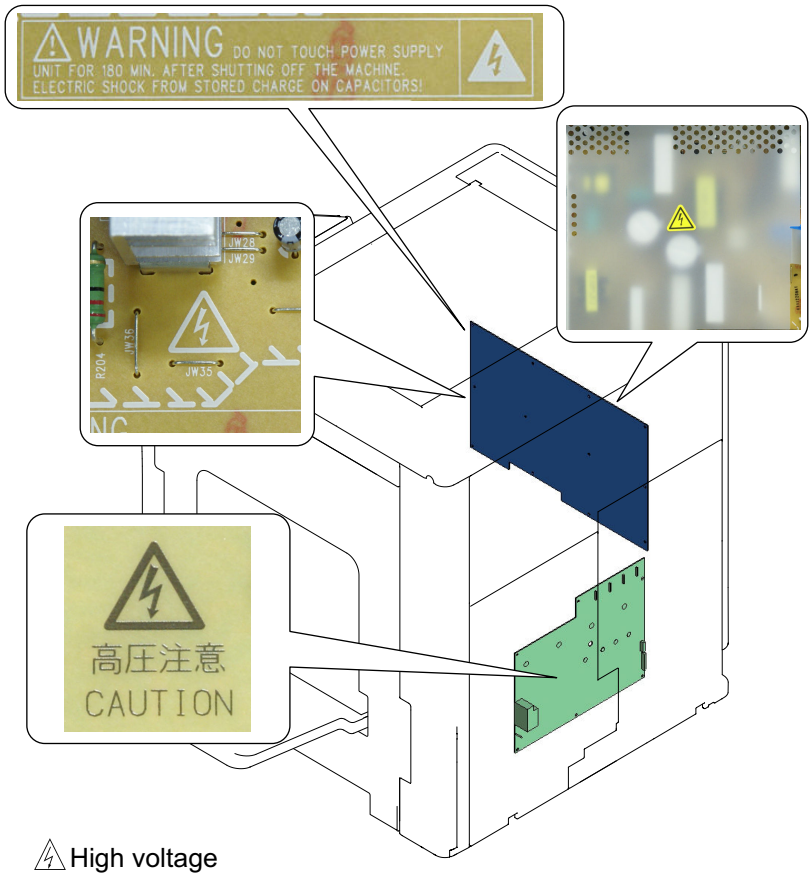

High voltage

This area generates high voltage.
Be careful not to touch here when the power is turned ON to avoid getting an electric shock.

5. MEASURES TO TAKE IN CASE OF AN ACCIDENT

1. If an accident has occurred, the distributor who has been notified first must immediately take emergency measures to provide relief to affected persons and to prevent further damage.
2. If a report of a serious accident has been received from a customer, an on-site evaluation must be carried out quickly and KM must be notified.
3. To determine the cause of the accident, conditions and materials must be recorded through direct on-site checks, in accordance with instructions issued by KM.
4. For reports and measures concerning serious accidents, follow the regulations specified by every distributor.

B NOTATION OF THE CONTENTS

1. PRECAUTION ON HANDLING THIS MANUAL

CAUTION

- **Use of this manual should be strictly supervised to avoid disclosure of confidential information.**

2. PRODUCT NAME

In this manual, each of the products is described as follows:

1	bizhub 364e/284e/224e: Main body	
2	Microsoft Windows XP: Windows XP	
3	Microsoft Windows Vista: Windows Vista	
4	Microsoft Windows 7: Windows 7	
5	Microsoft Windows 8: Windows 8	
6	When the description is made in combination of the OS's mentioned above:	Windows XP/Vista/7/8

3. BRAND NAME

3.1 TRADEMARKS OF OTHER COMPANIES

- The company names and product names mentioned in this manual are the brand name or the registered trademark of each company.

3.2 OWN TRADEMARKS

- KONICA MINOLTA, KONICA MINOLTA logo, bizhub, and PageScope are the registered trademarks of KONICA MINOLTA, INC.
- © 2013 KONICA MINOLTA, INC.

4. FEEDING DIRECTION

- When the long side of the paper is parallel with the feeding direction, it is called short edge feeding. The feeding direction which is perpendicular to the short edge feeding is called the long edge feeding.
- Short edge feeding will be identified with [S (abbreviation for Short edge feeding)] on the paper size. No specific notation is added for the long edge feeding. When the size has only the short edge feeding with no long edge feeding, [S] will not be added to the paper size.

Sample notation

Paper size	Feeding direction	Notation
A4	Long edge feeding	A4
	Short edge feeding	A4S
A3	Short edge feeding	A3

C PRODUCT SPECIFICATIONS

1. bizhub 364e/284e/224e

1.1 Type

Type	Desktop/console * scanner/printer
Printing process	laser electrostatic process copying system
PC drum type	OPC drum: KM-922
Scanning density	600 dpi
Exposure lamp	LED light (10W or under)
Platen	Stationary (mirror scan)
Original scanning	• Mirror scanning CCD optical system • Sheet through system when the DF-624/DF-701 is used
Registration	Rear left edge
Paper feeding separation system (Manual bypass)	Small roller separation system with torque limiter
Paper feeding separation system (Tray 1)	Roller separation system with pick-up mechanism
Paper feeding separation system (Tray 2)	Roller separation system with pick-up mechanism
Exposure system (Exposing system)	2 beam LD exposing system
Exposure system (Scan system)	Polygon mirror scan system
Exposure density (Main scanning direction)	1200 dpi
Exposure density (Sub scanning direction)	1200 dpi
Developing system	Dry 2 components developing method, HMT developing system
Charging system	Serrate electrode scorotron system
Neutralizing system	Red LED system
Image transfer system	Belt image transfer system (1st)/roller image transfer system (2nd)
Paper separating system	Combination of curvature, separating claws, and bias needle system
Fusing system	Belt fusing
Heating system	Halogen lamp

*: Only when the optional paper feed cabinet/desk is installed.

1.2 Functions

Types of original	Sheets, Books, Three-dimensional objects		
Max. original size	A3 or 11 x 17		
Max. original weight	Max. 2 kg		
Multiple copies	1 to 9999		
Warm-up time (at an ambient temperature of 23° C/73.4° F and rated source voltage)	Period from the time Main Power Switch was turned on to the time this machine is ready for printing.		
	bizhub 364e/284e/224e	20 sec. or less	
Image loss	Copy	• Leading edge: 4.2 mm (3/16 inch) • Trailing edge: 3 mm (1/8 inch) • Rear edge: 3 mm (1/8 inch) • Front edge: 3 mm (1/8 inch)	
	PC print	• Leading edge: 4.2 mm (3/16 inch) • Trailing edge: 4.2 mm (3/16 inch) • Rear edge: 4.2 mm (3/16 inch) • Front edge: 4.2 mm (3/16 inch)	
First copy time (Tray1/2 A4 or 8 1/2 x 11, full size)	bizhub 364e	• 5.3 sec. or less	
	bizhub 284e	• 5.9 sec. or less	
	bizhub 224e	• 6.9 sec. or less	
Processing speed	Plain paper	bizhub 364e: 166.4 mm/s	
		bizhub 284e/224e: 136.0 mm/s	
	Thick 1, Thick 1+, Thick 2, Thick 3, Thick 4, Special paper, Plain paper (glossy mode)	bizhub 364e: 83 mm/s	
		bizhub 284e/224e: 68 mm/s	
Copying speed for multi-copy cycle (A4 or 8 1/2 x 11, plain paper)	bizhub 364e	1-sided: 36 copies/min, 2-sided: 36 copies/min	
	bizhub 284e	1-sided: 28 copies/min, 2-sided: 28 copies/min	
	bizhub 224e	1-sided: 22 copies/min, 2-sided: 22 copies/min	
Fixed zoom ratios	Full size	x1.000	
	Reduction	Metric area	x0.500, x0.707, x0.816, x0.866
		Inch area	x0.500, x0.647, x0.733, x0.785

	Enlargement	Metric area	x1.154, x1.224, x1.414, x2.000
		Inch area	x1.214, x1.294, x1.545, x2.000
	Zoom ratios memory	3 memories	
Variable zoom ratios	x0.250 to x4.000	in 0.001 increments	
Paper size	Tray 1	Metric area	A3 to B5/B5S, A5S, 16K, 8K
		Inch area	11 x 17 to 8 1/2 x 11, 8 1/2 x 11S, 5 1/2 x 8 1/2S, 8 x 13
	Tray 2	Metric area	A3 to B5/B5S, A5S, A3Wide, SRA3, 16K, 8K
		Inch area	12 1/4 x 12 to 8 1/2 x 11, 8 1/2 x 11S, 5 1/2 x 8 1/2S, 8 x 13
	Manual bypass tray	Metric area	A3 to A6S, A5, A3Wide, SRA3, 16K/ 16KS, 8K
		Inch area	12 1/4 x 18 to 5 1/2 x 8 1/2, 5 1/2 x 8 1/2S, 4 x 6S, 8 x 13
Copy exit tray capacity	Plain paper	250 sheets	
	Thick paper	10 sheets	
	OHP film	1 sheet	
	Thin paper	100 sheets	
External memory function	Supported external memory devices	• USB flash memory compatible with the USB (1.1/2.0) interface • FAT32-formatted memory device	
Memory capacity	Main memory	2GB	
	HDD	250GB	

1.3 Paper

Type		Paper source (maximum tray capacity)		
		Tray 1	Tray 2	Manual bypass tray
Copy paper type	Thin paper *1 *2 (52 to 59 g/m2, 13 13/16 to 15 3/4 lb)	○(500 sheets)	○(500 sheets)	-
	Plain paper (60 to 90 g/m2, 16 to 24 lb)	○(500 sheets)	○(500 sheets)	○(150 sheets)
	Translucent paper	-	-	-
	OHP film	-	-	○(20 sheets)
	Thick paper 1 (91 to 120 g/m2, 24 1/4 to 32 lb)	○(150 sheets)	○(150 sheets)	
	Thick paper 1+ (121 to 157 g/m2, 32 1/4 to 41 3/4 lb)			
	Thick paper 2 (158 to 209 g/m2, 42 to 55 1/2 lb)			
	Thick paper 3 (210 to 256 g/m2, 55 3/4 to 68 lb) *2			
	Thick paper 4 (257 to 300 g/m2, 68 1/4 lb to 79 3/4 lb) *2 *3	-	-	
	Postcards	-	-	
	Envelopes	-	-	○(10 sheets)
	Label sheets	-	-	○(20 sheets)
	Index paper	-	-	○(20 sheets)
	Long size paper (127 to 210 g/m2, 33 3/4 to 55 3/4 lb)	-	-	○(10 sheets) *4
Copy paper dimensions	Width	• 139.7 to 297 mm • 5 1/2 to 11 3/4 inch	• 139.7 to 320 mm • 5 1/2 to 12 5/8 inch	• 90 to 320 mm • 3 1/2 to 12 5/8 inch
	Length	• 182 to 431.8 mm • 7 1/4 to 17 inch	• 182 to 457.2 mm • 7 1/4 to 18 inch	• 139.7 to 1200 mm • 5 1/2 to 47 1/4 inch

	Long size paper (Width x Length)	-	-	• 210 to 297 mm x 457.3 to 1200 mm or less • 8 1/4 to 11 11/16 inch x 18 to 47 1/4 inch or less *4

*1: Thin paper smaller than A5 size cannot be conveyed.
*2: Images are out of guarantee.
*3: Only for feeding landscape oriented A4/ Letter paper and A3/ Ledger
*4: MK-730 is necessary

NOTE

- **OHP film, thick paper 4, envelope, label sheets, index paper and long size paper cannot be fed for duplex printing.**

1.4 Materials

Parts name		Number of prints (Field standard yield)		Type name
Toner cartridge	bizhub 364e	24,000 sheets		TN322K
	bizhub 284e	24,000 sheets		
	bizhub 224e	24,000 sheets		
Developing unit	bizhub 364e	US	590,000 sheets	DV512K
		EU	600,000 sheets	
	bizhub 284e	US	590,000 sheets	
		EU	600,000 sheets	
	bizhub 224e	US	590,000 sheets	
		EU	600,000 sheets	
Drum unit	bizhub 364e	120,000 sheets		DR512K
	bizhub 284e	120,000 sheets		
	bizhub 224e	70,000 sheets		
Waste toner box		100,000 sheets		WX-103

- This machine has the field standard yield which indicates the available print numbers estimated by the quantities and usage of the unit in the market standard job mode.
  Yields for each preventative maintenance unit will differ depending on actual usage.

1.4.1 Conditions for defining the life value for the field standard yield

	bizhub 364e	bizhub 284e	bizhub 224e
Printing	4 P/J	3 P/J	2 P/J
Paper size	Letter: 93 %, LetterS: 7 % (US)		
	A4: 93 %, A4S: 7 % (EU)		
Total print volume/month (total)	US: 6,500	US: 4,800	US: 3,800
	EU: 7,800	EU: 5,500	EU: 4,200

1.5 Print volume

- bizhub 364e

US	Average	6,500 prints/month
	Maximum	48,000 prints/month
EU	Average	7,800 prints/month
	Maximum	48,000 prints/month

- bizhub 284e

US	Average	4,800 prints/month
	Maximum	28,000 prints/month
EU	Average	5,500 prints/month
	Maximum	28,000 prints/month

- bizhub 224e

US	Average	3,800 prints/month
	Maximum	19,000 prints/month
EU	Average	4,200 prints/month
	Maximum	19,000 prints/month

1.6 Machine specifications

Power requirements	Voltage:	AC 100 V, AC 110V, AC 120 V, AC 220-240 V	
	Current:	100 V	15 A

		110 V	15 A
		120 V	12 A
		230 V	8 A
	Frequency:	50/60 Hz	
Max power consumption		100 V	1,500 W or less
		110 V	1,500 W or less
		120 V	1,500 W or less
		230 V	1,580 W or less
Dimensions		• 615 mm *1 (W) x 685 mm (D) x 779 mm (H) *2 • 24.$^{3}/_{16}$ inch *1 (W) x 26 $^{15}/_{16}$ inch (D) x 30 $^{11}/_{16}$ inch (H) *2	
Space requirements		• 937 mm *2 (W) x 1,214 mm *2 (D) x 779 mm (H) *3 • 36 $^{7}/_{8}$ inch *2 (W) x 47 $^{13}/_{16}$ inch *2 (D) x 30 $^{11}/_{16}$ inch (H) *3	
Weight	Machine	Approx. 76 kg (176 1/2 lb) (without toner cartridge)	

*1: Width when the manual bypass tray is closed
*2: Height up to the original glass
*3: Manual bypass tray and the tray are pulled out

1.7 Operating environment

Temperature	10 to 30° C / 50 to 86° F (with a fluctuation of 10° C / 18° F or less per hour)
Humidity	15 to 85% (Relative humidity with a fluctuation of 10%/h)
Levelness	Difference between front and back, right and left should be 1 degree or under.

1.8 Print functions

First print time (Tray1/2 A4 or 8 $^{1}/_{2}$ x 11, full size)	bizhub 364e	• 5.3 sec. or less
	bizhub 284e	• 5.9 sec. or less
	bizhub 224e	• 6.9 sec. or less
Printing speed for multi-print cycle (A4 or 8 $^{1}/_{2}$ x 11, plain paper)	bizhub 364e	• 1-sided: 36 copies/min, 2-sided: 36 copies/min
	bizhub 284e	• 1-sided: 28 copies/min, 2-sided: 28 copies/min
	bizhub 224e	• 1-sided: 22 copies/min, 2-sided: 22 copies/min
Print resolution	• Multivalued: Equivalent to 1,800 dpi in main scanning direction x 600 dpi in sub scanning direction • Binary: Equivalent to 1,200 dpi in main scanning direction x 1,200 dpi in sub scanning direction	
Printer language	PCL5c/e Emulation, PCL 6 (XL version 3.0) Emulation, PostScript 3 Emulation (3016), XPS ver.1.0	
Supported operating systems (server)	• Windows server 2003, Windows server 2003 64bit, Windows server 2003 R2, Windows server 2003 R2 64bit • Windows server 2008, Windows server 2008 64bit, Windows server 2008 R2 • Windows server 2012	
Supported operating systems (client)	• Windows XP, Windows XP 64bit, Windows Vista, Windows Vista 64bit, Windows 7, Windows 7 64bit, Windows 8, Windows 8 64bit • Mac OS 9.2, Mac OSX 10.2, Mac OSX 10.3, Mac OSX 10.4, Mac OSX 10.5, Mac OSX 10.5 Intel edition, Mac OSX 10.6, Mac OSX 10.7, Mac OSX 10.8 • Linux	
Printer driver (PCL6)	• Windows XP, Windows XP 64bit, Windows Vista, Windows Vista 64bit, Windows 7, Windows 7 64bit, Windows 8, Windows 8 64bit • Windows Server 2003, Windows Server 2003 64bit, Windows Server 2003 R2, Windows Server 2003 R2 64bit, Windows Server 2008, Windows Server 2008 64bit, Windows Server 2008 R2, Windows Server 2012 64bit	
Printer driver (PostScript 3)	• Windows XP, Windows XP 64bit, Windows Vista, Windows Vista 64bit, Windows 7, Windows 7 64bit, Windows 8, Windows 8 64bit • Windows Server 2003, Windows Server 2003 64bit, Windows Server 2003 R2, Windows Server 2003 R2 64bit, Windows Server 2008, Windows Server 2008 64bit, Windows Server 2008 R2, Windows Server 2012 64bit • Mac OS9.2 PPD file, Mac OSX 10.2 PPD+PDE, Mac OSX 10.3 PPD+PDE, Mac OSX 10.4 PPD+PDE, Mac OSX 10.5 PPD+PDE, Mac OSX 10.5 Intel edition PPD+PDE, Mac OSX 10.6 PPD+PDE, Mac OSX 10.7 PPD+PDE, Mac OSX 10.8 PPD+PDE • Linux printer driver PPD file	
Printer driver (XPS)	• Windows Vista, Windows Vista 64bit, Windows 7, Windows 7 64bit, Windows 8, Windows 8 64bit • Windows Server 2008, Windows Server 2008 64bit, Windows Server 2008 R2, Windows Server 2012 64bit	
Work memory	2GB	
Host interface	Ethernet (1000Base-T/100Base-TX/10Base-T), USB2.0/1.1, USB_Host	
Built-in fonts (PCL)	European 80 fonts	
Built-in fonts (PostScript 3 Emulation)	European 137 fonts	

1.9 Scan functions

Scanner	Scannable range		Same as the copier(Max. 11 x 17: inch area, A3: metric area)
	Scan speed (A4 or 8 1/2 x 11, DF scan, 1-side original Resolution 300 dpi)		• DF-624: 80 pages/min *1 • DF-701: 80 pages/min *1
	Functions		Scan to E-mail, Scan to FTP, Scan to SMB, Scan to WebDAV, Scan to BOX, Scan server sending, Devices Profile for Web Services (DPWS)
	Scanning resolution		• Push: 200 dpi/300 dpi/400 dpi/600 dpi • Pull: Allows you to zoom and scan data.
TWAIN	Driver		TWAIN Driver, HDD TWAIN Driver
	Supported operating systems		Windows XP, Windows XP 64bit, Windows Vista, Windows Vista 64bit, Windows 7, Windows 7 64bit, Windows 8, Windows 8 64bit
	PC		Conform to the specification of operating system
	Required memory		Conform to the specification of operating system
	Network		Computer to which TCP/IP protocol is correctly set
	Hard disk		Required 20 MB or more disk space
SMB	Supported operating systems	Windows	• Windows XP, Windows XP 64bit, Windows Vista, Windows Vista 64bit, Windows 7, Windows 7 64bit, Windows 8, Windows 8 64bit • Windows Server 2003, Windows Server 2003 64bit, Windows Server 2003 R2, Windows Server 2003 R2 64bit, Windows Server 2008, Windows Server 2008 64bit, Windows Server 2008 R2, Windows Server 2012
			DFS function is supported only in the environment that structured with the following Windows server operating systems. • Windows Server 2003 each edition, Windows Server 2008, Windows Server 2008 R2, Windows Server 2012
			Direct hosting functions apply to the following operating systems. • Windows XP, Windows Vista, Windows 7, Windows 8 (IPv6 function is available only when the Windows Vista or later)
		Samba *2	2.2.x, 3.x
		Novell Netware	Netware 6.5 (SP6 or later)

- *1: When an optional unit is installed
- *2: This machine supports Unicode. However, if the operating system used in a destination computer does not support Unicode (2 and 3 byte characters), SMB transmission may be unavailable. If SMB transmission is unsuccessful, specify the shared name of the destination folder using ASCII codes (one-byte alphanumeric characters).

1.10 Note for the Specifications

NOTE

- **These specifications are subject to change without notice.**

2. DF-624

2.1 Type

Name	Reverse automatic document feeder	
Type	Paper feed section	Paper feed from top of stack
	Image reading section	Sheet-through system
	Turnover section	Switchback system
	Exit section	Straight exit system
Installation	Screw clamp to the main body	
Document alignment	Center	
Document loading	Face up	
Option	Stamp unit (SP-501)	

2.2 Functions

Modes	Standard mode/ Mixed original detection mode/ Scan mode/ FAX mode

2.3 Paper

Type of document	Standard mode (Plain paper)	1-sided mode: 35 to 128 g/m^2 (9.25 to 34 lb)	
		2-sided mode: 50 to 128 g/m^2 (13.25 to 34 lb)	
	Mixed original detection mode *1 (Plain paper)	1-sided / 2-sided mode: 50 to 128 g/m^2 (13.25 to 34 lb)	
	Scan mode/ FAX mode (Plain paper)	1-sided mode: 35 to 128 g/m^2 (9.25 to 34 lb)	
		2-sided mode: 50 to 128 g/m^2 (13.25 to 34 lb)	
Document size	Standard mode/ Scan mode/ FAX mode	Metric area	B6S to A3
		Inch area	5 1/2 x 8 1/2 to 11 x 17
Capacity	Standard mode	130 sheets (64 g/m^2 (17lb)) or stack of 12 mm and below (including paper curl)	
	Mixed original detection mode/ Scan mode/ FAX mode	100 sheets (64 g/m^2 (17lb)) or stack of 12 mm and below (including paper curl)	

*1: For the combined original detection mode, refer to the mixed original feed chart.

2.4 Particular originals

- If fed, paper feed will be possible to some extent but trouble occurrence will be possible.

Type of original	Possible trouble
Sheets lightly curled (Curled amount: 10 to 15 mm) *1	Dog-eared, exit failure, transport failure
Thermal paper (Heat sensitive paper)	Edge folded, exit failure, transport failure
Paper immediately after paper exit from the main unit	Paper feed failure, transport failure
Paper with many punched holes (e.g., loose leaf *2, CF paper *3)	Multi-page feed due to flashes from holes
Folded original (including half-folded and Z-folded originals) *4	Paper feed failure, transport failure, image distortion
Sheets with 2 to 4 holes	Transport failure
Coated paper (including inkjet paper)	Paper feed failure, transport failure

- *1: When the original is less than 10mm in vertical and 20mm in horizontal direction and the amount of float of the folded original is less than 10mm, the feed and the image are guaranteed.
  *2: Limited to vertical feeding
  *3: No crease on perforation
  *4: Creases must be smoothed out. (amount of float: 15 mm or less)

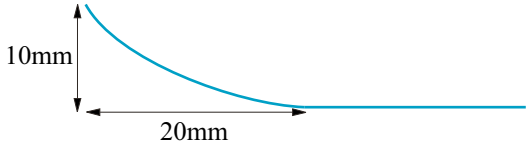

2.5 Prohibited originals

- Prohibited originals that cause trouble

Type of original
Sheets stapled or clipped together
Book original
Sheets with paper attached
Sheets clipped or notched

Type of original
Torn paper
Original weighing less than 35 g/m^2 (9.25 lb) or 128 g/m^2 (34 lb) or more
Significantly curled original (amount of curl exceeding 15 mm)
OHP film
Label paper
Offset master paper
Glossy photographic paper or glossy enamel paper

2.6 Mixed original feed chart

- For metric

Max. original size		297 mm		257 mm		210 mm		182 mm	148 mm
Mixed original size		A3	A4	B4	B5	A4S	A5	B5S	A5S
297 mm	A3	OK	OK	-	-	-	-	-	-
	A4	OK	OK	-	-	-	-	-	-
257 mm	B4	OK	OK	OK	OK	-	-	-	-
	B5	OK	OK	OK	OK	-	-	-	-
210 mm	A4S	OK	OK	OK	OK	OK	OK	-	-
	A5	NG	NG	NG	NG	OK	OK	-	-
182 mm	B5S	NG	NG	OK	OK	OK	OK	OK	-
148 mm	A5S	NG	NG	NG	NG	NG	NG	OK	OK

- For inch

Max. original size		11		8 1/2			5 1/2
Mixed original size		11 x 17	8 1/2 x 11	8 1/2 x 14	8 1/2 x 11S	8 1/2 x 5 1/2	5 1/2 x 8 1/2S
11	11 x 17	OK	OK	-	-	-	-
	8 1/2 x 11	OK	OK	-	-	-	-
8 1/2	8 1/2 x 14	OK	OK	OK	OK	OK	-
	8 1/2 x 11S	OK	OK	OK	OK	OK	-
	8 1/2 x 5 1/2	NG	NG	OK	OK	OK	-
5 1/2	5 1/2 x 8 1/2S	NG	NG	NG	NG	NG	OK

OK	Mixed original feed available (Tilted with in 1.5 % or less)
NG	NO. mixed original feed
-	Can not set original

2.7 Machine specifications

Power requirements	Power supply	DC 24 V, DC 5 V (for recovering from the sleep mode)
	Supplying method	Supplied from the main body
Max. power consumption	60 W or less	
Dimensions	• 611.2 mm (W) x 503.6 mm (D) x 127.1 mm (H) • 24 $^{1}/_{16}$ inch (W) x 19 $^{13}/_{16}$ inch (D) x 5 inch (H)	
Weight	Approx. 9.0 kg (19 3/4 lb)	

2.8 Operating environment

- Conforms to the operating environment of the main unit.

2.9 Note for the Specifications

NOTE

- **These specifications are subject to change without notice.**

3. DF-701

3.1 Type

Name	Dual scan document feeder	
Type	Paper feed section	Paper feed from top of stack
	Image reading section	• Front side: Sheet-through system • Back side: Reading by CIS
	Exit section	Straight exit system
Installation	Screw clamp to the main body	
Document alignment	Center	
Document loading	Face up	
Option	Stamp unit (SP-501)	

3.2 Functions

Modes	Standard mode/ Mixed original (same width/different width) detection mode/ Scan mode/ FAX mode

3.3 Paper

Type of document	Standard mode (Plain paper)	1-sided mode: 35 g/m^2 to 163 g/m^2 (9.25 lb to 43.25 lb)	
		2-sided mode: 50 g/m^2 to 163 g/m^2 (13.25 lb to 43.25 lb)	
	Mixed original detection mode (Plain paper) *1	1-sided / 2-sided mode: 50 g/m^2 to 128 g/m^2 (13.25 lb to 34 lb)	
	Scan mode/ FAX mode (Plain paper)	1-sided mode: 35 g/m^2 to 163 g/m^2 (9.25 lb to 43.25 lb)	
		2-sided mode: 50 g/m^2 to 163 g/m^2 (13.25 lb to 43.25 lb)	
Document size	Standard mode/ Scan mode/ FAX mode	Metric area	B6S to A3
		Inch area	5 $^1/_2$ x 8 $^1/_2$ to 11 x 17
Capacity	Standard mode	130 sheets (64 g/m^2 (17lb)) or stack of 12 mm and below (including paper curl)	
	Mixed original detection mode/ Scan mode/ FAX mode	100 sheets (64 g/m^2 (17lb)) or stack of 12 mm and below (including paper curl)	

- *1: For the mixed original detection mode, refer to the mixed original feed chart.

3.4 Particular originals

- If fed, paper feed will be possible to some extent but trouble occurrence will be possible.

Type of original	Possible trouble
Sheets lightly curled (Curled amount: 10 to 15 mm) *1	Dog-eared, exit failure, transport failure
Thermal paper (Heat sensitive paper)	Edge folded, exit failure, transport failure
Paper immediately after paper exit from the main unit	Paper feed failure, transport failure
Paper with many punched holes (e.g., loose leaf *2, CF paper *3)	Multi-page feed due to flashes from holes
Folded original (including half-folded and Z-folded originals) *4	Paper feed failure, transport failure, image distortion
Sheets with 2 to 4 holes	Transport failure
Coated paper (including inkjet paper)	Paper feed failure, transport failure

- *1: When the original is less than 10mm in vertical and 20mm in horizontal direction and the amount of float of the folded original is less than 10mm, the feed and the image are guaranteed.
  *2: Limited to vertical feeding
  *3: No crease on perforation
  *4: Creases must be smoothed out. (amount of float: 15 mm or less)

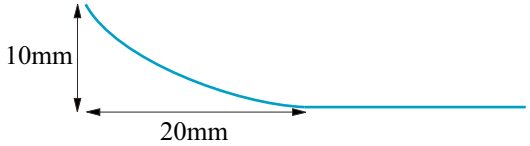

3.5 Prohibited originals

- Prohibited originals that cause trouble

Type of original
Sheets stapled or clipped together
Book original
Sheets with paper attached

Type of original
Sheets clipped or notched
Torn paper
Original weighing less than 35 g/m^2 (9.25 lb) or 163 g/m^2 (43.25 lb) or more
Significantly curled original (amount of curl exceeding 15 mm)
OHP film
Label paper
Offset master paper
Glossy photographic paper or glossy enamel paper

3.6 Mixed original feed chart

- For metric

Max. original size		297 mm		257 mm		210 mm		182 mm	148 mm
Mixed original size		A3	A4	B4	B5	A4S	A5	B5S	A5S
297 mm	A3	OK	OK	-	-	-	-	-	-
	A4	OK	OK	-	-	-	-	-	-
257 mm	B4	OK	OK	OK	OK	-	-	-	-
	B5	OK	OK	OK	OK	-	-	-	-
210 mm	A4S	OK	OK	OK	OK	OK	OK	-	-
	A5	NG	NG	NG	NG	OK	OK	-	-
182 mm	B5S	NG	NG	OK	OK	OK	OK	OK	-
148 mm	A5S	NG	NG	NG	NG	NG	NG	OK	OK

- For inch

Max. original size		11		8 1/2			5 1/2
Mixed original size		11 x 17	8 1/2 x 11	8 1/2 x 14	8 1/2 x 11S	8 1/2 x 5 1/2	5 1/2 x 8 1/2S
11	11 x 17	OK	OK	-	-	-	-
	8 1/2 x 11	OK	OK	-	-	-	-
8 1/2	8 1/2 x 14	OK	OK	OK	OK	OK	-
	8 1/2 x 11S	OK	OK	OK	OK	OK	-
	8 1/2 x 5 1/2	NG	NG	OK	OK	OK	-
5 1/2	5 1/2 x 8 1/2S	NG	NG	NG	NG	NG	OK

OK	Mixed original feed available (Tilted with in 1.5 % or less)
NG	No. mixed original feed
-	Can not set original

3.7 Machine specifications

Power requirements	Power supply	DC 24 V, DC 5 V (for recovering from the sleep mode), DC 12 V (for CIS)
	Supplying method	Supplied from the main unit
Max. power consumption	74.5 W or less	
Dimensions	• 611.2 mm (W) x 503.6 mm (D) x 142.1 mm (H) • 24 $^1/_{16}$ inch (W) x 19 $^{13}/_{16}$ inch (D) x 5 $^5/_8$ inch (H)	
Weight	Approx. 12.0 kg (26 7/16 lb)	

3.8 Operating environment

- Conforms to the operating environment of the main unit.

3.9 Note for the Specifications

NOTE

- **These specifications are subject to change without notice.**

4. PC-110/PC-210

4.1 Type

Name	• 1 way paper feed cabinet (PC-110) • 2 way paper feed cabinet (PC-210)
Type	Front loading type • 1 way paper feed device (PC-110) • 2 way paper feed device (PC-210)
Installation	Desk type
Document alignment	Center

4.2 Paper

Type	Size	Capacity	
		Tray 3	Tray 4
Thin paper (52 to 59 g/m^2, 13 13/16 to 15 3/4 lb) *1	• A5S (Metric area only), B5, B5S, A4, A4S, B4, A3 • 5 $^1/_2$ x 8 $^1/_2$S (Inch area only), 8 $^1/_2$ x 11, 8 $^1/_2$ x 11S, 8 $^1/_2$ x 14, 11 x 17, • 8K, 16K, Foolscap *2	500 sheets	500 sheets
Plain paper (60 to 90 g/m^2, 16 to 24 lb)			
Recycled paper (60 to 90 g/m^2, 16 to 24 lb)			
Thick paper 1 (91 to 120 g/m^2, 24 1/4 to 32 lb)		150 sheets	150 sheets
Thick paper 1+ (121 to 157 g/m^2, 32 1/4 to 41 3/4 lb)			
Thick paper 2 (158 to 209 g/m^2, 42 to 55 1/2 lb)			
Thick paper 3 (210 to 256 g/m^2, 55 3/4 to 68 lb) *1			
Copy paper dimensions	Width	• 139.7 to 297 mm • 5 $^1/_2$ to 11 $^{11}/_{16}$ inch	
	Length	• 182 to 431.8 mm • 7 $^3/_{16}$ to 17 inch	

*1: Images are out of guarantee.
*2: There are 4 types to be selected from in the service mode; 8x13, 8.25x13, 8.5x13, 8.5x13.5.

4.3 Machine specifications

Power requirements	Supplied from the main unit	
Max. power consumption	15 W or less	
Dimensions	• 615 mm (W) x 653 mm (D) x 304.1 mm (H) • 24 $^3/_{16}$ inch (W) x 25 $^{11}/_{16}$ inch (D) x 12 inch (H)	
Weight	PC-110	Approx. 22 kg (48 1/2 lb)
	PC-210	Approx. 24 kg (53 lb)

4.4 Operating environment

- Conforms to the operating environment of the main unit.

4.5 Note for the Specifications

NOTE

- **These specifications are subject to change without notice.**

5. PC-410

5.1 Type

Name	Large capacity cabinet
Type	Front loading type LCC
Installation	Desk type
Document alignment	Center

5.2 Paper

Type	Size	Capacity
Thin paper (52 to 59 g/m^2, 13 13/16 to 15 3/4 lb) *1	• Metric area: A4 • Inch area: 8 $^1/_2$ x 11	2,500 sheets
Plain paper (60 to 90 g/m^2, 16 to 24 lb)		
Recycled paper (60 to 90 g/m^2, 16 to 24 lb)		
Thick paper 1 (91 to 120 g/m^2, 24 1/4 to 32 lb)		1,000 sheets
Thick paper 1+ (121 to 157 g/m^2, 32 1/4 to 41 3/4 lb)		
Thick paper 2 (158 to 209 g/m^2, 42 to 55 1/2 lb)		
Thick paper 3 (210 to 256 g/m^2, 55 3/4 to 68 lb) *1		

*1: Images are out of guarantee.

5.3 Machine specifications

Power requirements	Supplied from the main unit
Max. power consumption	45 W or less
Dimensions	• 615 mm (W) x 653 mm (D) x 304.1 mm (H) • 24 $^3/_{16}$ inch (W) x 25 $^{11}/_{16}$ inch (D) x 12 inch (H)
Weight	Approx. 23 kg (61 3/4 lb)

5.4 Operating environment

- Conforms to the operating environment of the main unit.

5.5 Note for the Specifications

NOTE

- **These specifications are subject to change without notice.**

6. JS-506

6.1 Type

Type	Job separator with movable tray
Installation	Fixed at the exit section of the main body
Document alignment	Center

6.2 Functions

Modes	Non-sort, sort, group, sort offset, group offset

6.3 Paper

Exit tray	Modes	Size	Type		Capacity
Tray1 *1	Non-sort, sort, group	• A6S, A5S, A5, B5S, B5, A4S, A4, B4, A3, A3Wide • InvoiceS, Invoice, LetterS, Letter, Legal, Ledger, ExectiveS, Exective, 16KS, 16K, 8K, SRA3 • Custom size paper (Width: 90 mm to 320 mm / Length: 139.7 mm to 457.2 mm)	Plain paper, Recycled paper (60 to 90 g/m^2, 16 to 24 lb)		100 sheets
			Thin paper (52 to 59 g/m^2, 13 13/16 to 15 3/4 lb)		50 sheets
			Thick paper (91 to 300 g/m^2, 24 1/4 to 79 3/4 lb)		10 sheets *3
			Special paper	Label sheets	
				OHP	
				Letterhead	
				Envelopes	
Tray2 *2	Non-sort, sort, group	• A6S, A5S, A5, B5S, B5, A4S, A4, B4, A3, A3Wide • InvoiceS, Invoice, LetterS, Letter, Legal, Ledger, ExectiveS, Exective,16KS, 16K, 8K, SRA3 • Postcards, Long size paper • Custom size paper (Width: 90 mm to 320 mm / Length: 139.7 mm to 1200 mm)	Plain paper, Recycled paper (60 to 90 g/m^2, 16 to 24 lb)		150 sheets
			Thin paper (52 to 59 g/m^2, 13 13/16 to 15 3/4 lb)		
			Thick paper (91 to 300 g/m^2, 24 1/4 to 79 3/4 lb)		20 sheets
			Special paper	Label sheets	
				Postcards	
				OHP	
				Letterhead	
				Index paper	
				Envelopes	10 sheets
			Long size paper		Not specified *4
	Sort offset, group offset	• B5S, B5, A4S, A4, B4, A3 • LetterS, Letter, Legal, Ledger, ExectiveS, Exective, 16KS, 16K, 8K • Custom size paper (Width: 182 mm to 297 mm / Length: 182 mm to 431.8 mm)	Plain paper, Recycled paper (60 to 90 g/m^2, 16 to 24 lb)		150 sheets
			Thin paper (52 to 59 g/m^2, 13 13/16 to 15 3/4 lb)		
			Thick paper (91 to 300 g/m^2, 24 1/4 to 79 3/4 lb)		20 sheets *3

- *1: 22.5 mm in stack height
- *2: 49.9 mm in stack height
- *3: Available to the loading height (Only the loading height of tray 1 is detected by the sensor.)
- *4: Includes falling off the tray

6.4 Offset function

Exit tray	Tray 2
Shift amount	30 mm
Types of paper to be used	Plain paper/ Recycled paper (60 to 90 g/m^2, 16 to 24 lb), Thin paper (52 to 59 g/m^2, 13 13/16 to 15 3/4 lb), Thick paper (91 to 300 g/m^2, 24 1/4 to 79 3/4 lb)
Paper size	• B5S, B5, A4S, A4, B4, A3 • LetterS, Letter, Legal, Ledger, ExectiveS, Exective, 16KS, 16K, 8K

6.5 Machine specifications

Power requirements	DC 24 V ± 10 % (supplied from the main body)
Max. power consumption	24 W or less
Dimensions	• 491.9 mm (W) x 469.5 mm (D) x 226.5 mm (H) • 19 $^3/_8$ inch (W) x 18 $^1/_2$ inch (D) x 8 $^{15}/_{16}$ inch (H)

Weight	1.5 kg (3 1/4 lb)

6.6 Operating environment

- Conforms to the operating environment of the main body.

6.7 NOTE

- **These specifications are subject to change without notice.**

7. FS-533

7.1 Type

Type	Multi staple finisher built into the main body
Installation	Installed in main body
Document alignment	Center
Consumables	Staples (5,000 staples / cartridge)

7.2 Functions

Modes	Non-sort, sort, group, sort offset, Group offset, sort staple

7.3 Paper process ability

7.3.1 Non sort/sort/group

(1) Max. capacity

Type	Basis weight	Paper capacity (Number of stacked sheets/ Height of stacked sheets) *	
		• A4S or less • 8 1/2 x 11S or less	• B4 or greater • 8 1/2 x 14 or greater
Thin paper	52 to 90 g/m^2, 13 13/16 to 24 lb	500 sheets / 73 mm	250 sheets / 36 mm
Plain paper			
Recycled paper			
Thick paper 1	91 to 120 g/m^2, 24 1/4 to 32 lb	10 sheets / 73 mm	10 sheets / 36 mm
Thick paper 1+	121 to 157 g/m^2, 32 1/4 to 41 3/4 lb		
Thick paper 2	158 to 209 g/m^2, 42 to 55 1/2 lb		
Thick paper 3	210 to 256 g/m^2, 55 3/4 to 68 lb		
Thick paper 4	257 to 300 g/m^2, 68 1/4 lb to 79 3/4 lb		
Postcards	190 g/m^2, 50 1/2lb		
OHP film	-		
Envelope	-		
Label sheets	-		
Letterhead	-		
Tab paper	-		
Long size paper	-	Not specified	

- *: If either the number or height of stacked sheets reaches the specified value, “Tray paper full” is determined.

(2) Paper size

Type	Size
Regular size paper	A6S, A5S, A5, B6S, B5S, B5, A4S, A4, B4, A3, A3Wide, SRA3, Post card S, Long size paper, 16KS, 16K, 8KS, 8K
Custom size paper	• Max.: Width 320 mm x Length 1,200 mm • Min.: Width 90 mm x Length 139.7 mm

7.3.2 Sort offset/group offset

(1) Max. capacity

Type	Basis weight	Paper capacity (Number of stacked sheets/ Height of stacked sheets) *	
		• A4S or less • 8 1/2 x 11S or less	• B4 or greater • 8 1/2 x 14 or greater
Thin paper	52 to 90 g/m^2, 13 13/16 to 24 lb	500 sheets / 73 mm	250 sheets / 36 mm
Plain paper			
Recycled paper			

Type	Basis weight	Paper capacity (Number of stacked sheets/ Height of stacked sheets) *	
		• A4S or less • 8 1/2 x 11S or less	• B4 or greater • 8 1/2 x 14 or greater
Thick paper 1	91 to 120 g/m^2, 24 1/4 to 32 lb	10 sheets / 73 mm	10 sheets / 36 mm
Thick paper 1+	121 to 157 g/m^2, 32 1/4 to 41 3/4 lb		
Thick paper 2	158 to 209 g/m^2, 42 to 55 1/2 lb		
Thick paper 3	210 to 256 g/m^2, 55 3/4 to 68 lb		
Thick paper 4	257 to 300 g/m^2, 68 1/4 lb to 79 3/4 lb		

• *: If either the number or height of stacked sheets reaches the specified value, “Tray paper full” is determined.

(2) Paper size

Type	Size
Regular size paper	B5, A4S, A4, B4, A3, 16K, 8K
Custom size paper	• Max.: Width 297 mm x Length 431.8 mm • Min.: Width 210 mm x Length 182 mm

7.3.3 Sort staple

(1) Paper capacity

Type	Basis weight	Max. capacity (Number of stacked sheets / Height of stacked sheets) *1	
		• A4S or less • 8 1/2 x 11S or less	• B4 or greater • 8 1/2 x 14 or greater
Thin paper	52 to 90 g/m^2, 13 13/16 to 24 lb	• 500 sheets • 50 copies • 73 mm	• 250 sheets • 50 copies • 36 mm
Plain paper			
Recycled paper			
Thick paper 1 *2	91 to 120 g/m^2, 24 1/4 to 32 lb	Not specified	
Thick paper 1+ *2	121 to 157 g/m^2, 32 1/4 to 41 3/4 lb		
Thick paper 2 *2	158 to 209 g/m^2, 42 to 55 1/2 lb		

• *1: If either the number or height of stacked sheets reaches the specified value, “Tray paper full” is determined.
• *2: Thick papers can be used only in "Front Cover/ Back Cover" in Cover sheet mode.

(2) Basis weight

Mode	Basis weight
Normal mode	52 to 90 g/m^2, 13 13/16 to 24 lb
Cover sheet mode	52 to 209 g/m^2, 13 13/16 to 55 1/2 lb (2 sheets or under for thick paper)

(3) Paper size

Type	Size
Regular size paper	B5, A4S, A4, B4, A3, 16K, 8K
Custom size paper	• Max.: Width 297 mm x Length 431.8 mm • Min.: Width 210 mm x Length 182 mm

(4) Max. No. of sheets to be stapled

Mode	Max. No. of sheets to be stapled	
	• A4S or less • 8 1/2 x 11S or less	• B4 or greater • 8 1/2 x 14 or greater
Normal mode	50 sheets	30 sheets
Cover sheet mode *	48 sheets (Thin paper/ Plain paper / Recycled paper) + 2 sheets (Thick paper)	28 sheets (Thin paper/ Plain paper / Recycled paper) + 2 sheets (Thick paper)

• *: Thick paper can be used only in "Front Cover/ Back Cover".

(5) Stapling position

Stapling position	Back of the corner (Parallel), Front of the corner (Parallel), Center two points (Parallel)

7.4 Machine specifications

Power requirements	DC 24 V ± 10% (supplied from the main body)
Max. power consumption	40 W or less
Dimensions	• 472.5 mm * (W) x 583.5 mm * (D) x 194.7 mm (H) • 18 $^{5}/_{8}$ inch * (W) x 23 inch * (D) x 7 $^{11}/_{16}$ inch (H)
Weight	12.0 kg (26 1/2 lb)

- *: Includes mounting part

7.5 Operating environment

- Conforms to the operating environment of the main body.

7.6 Note for the Specifications

NOTE

- **These specifications are subject to change without notice.**

8. PK-519

8.1 Type

Name	Punch kit
Type	FS-integrated type punching operation device

8.2 Functions

Punching method	Stops and punches every paper
No. of holes	2-3 holes, 2-4 holes, Sweden 4 holes
Hole diameter	• 2 holes / φ 8.0 mm - 3 holes /φ8.0 mm • 2 holes /φ6.5 mm - 4 holes /φ6.5 mm • Sweden 4 holes /φ6.5 mm
Hole pitch	80 mm
Supported mode	Punch mode
Applicable post processing mode	Sort, Group, Staple

8.3 Paper

Size	• 2 holes • Sweden 4 holes	• A3, B4, A4, A4S, B5, B5S • 11 x 17, 8 1/2 x 14, 8 1/2 x 11, 8 1/2 x 11S, 7 1/4 x 10 1/2, 7 1/4 x 10 1/2S • 8K, 16K, 16KS
	• 3 holes • 4 holes	• A3, B4, A4, B5 • 11 x 17, 8 1/2 x 11, 7 1/4 x 10 1/2 • 8K, 16K
Supported paper	• Thin paper (52 to 59 g/m^2 / 13 13/16 to 15 11/16 lb) • Plain paper (60 to 90 g/m^2 / 15 15/16 to 23 15/16 lb) • Thick 1 (91 to 120 g/m^2 / 24 3/16 to 31 15/16 lb) • Thick 1+ (121 to 157 g/m^2 / 32 3/16 to 41 3/4 lb)	
Punch prohibited paper	• Label paper, Tab paper, OHP film, 2nd base paper, Holed paper • Other paper that may interfere with the operation of the punch kit or the punch blade	

8.4 Machine specifications

Power requirements	DC 24 V (supplied from the finisher)
	DC 5 V (supplied from the finisher)
Max. power consumption	Included in the max. power consumption of finisher
Dimensions	• 110.2 mm (W) x 483.5 mm (D) x 203.2 mm (H) • 4 5/16 inch (W) x 19 1/16 inch (D) x 8 inch (H)
Weight	Approx. 3.2 kg (7 lb)

8.5 Operating environment

- Conforms to the operating environment of the main body.

8.6 Note for the Specifications

NOTE

- **These specifications are subject to change without notice.**

9. FS-534

9.1 Type

Name	Multi staple finisher
Type	Freestanding
Document alignment	Center
Consumables	Staples (5,000 staples / cartridge)

9.2 Functions

Modes	Sort, Group, Sort offset, Group offset, Sort staple

9.3 Paper process ability

9.3.1 Non sort/sort/group

(1) Main tray

NOTE

- **If either the number or height of stacked sheets reaches the specified value, "Tray paper full" is determined.**

(a) Max. capacity

Type	Basis weight	Max. number of stacked sheets		
		• A5/A5S or less • 8 1/2 x 11S or less	• A4/A4S greater to B4 less • 8 1/2 x 11S greater to 8 1/2 x 14 less	• B5S • B4 or greater • 8 1/2 x 14 or greater
Thin paper	52 to 90 g/m^2 (13 13/16 to 24 lb)	500 sheets	• 3,000 sheets • 2,000 sheets (when saddle stitcher is mounted)	1,500 sheets
Plain paper				
Recycled paper				
Thick paper 1	91 to 120 g/m^2 (24 1/4 to 32 lb)	20 sheets		
Thick paper 1+	121 to 157 g/m^2 (32 1/4 to 41 3/4 lb)			
Thick paper 2	158 to 209 g/m^2 (42 to 55 1/2 lb)			
Thick paper 3	210 to 256 g/m^2 (55 3/4 to 68 lb)			
Thick paper 4	257 to 300 g/m^2 (68 1/4 lb to 79 3/4 lb)			
OHP film	-			
Envelope	-			
Label	-			
Letterhead	-			

(b) Height of stacked sheets

State	Max. height of stacked sheets	
	• Paper length is A4S or less • Paper length is 8 $^1/_2$ x 11S or less	• Paper length is B4 or greater • Paper length is 8 $^1/_2$ x 14 or greater
Standard (saddle stitcher is not mounted)	375 mm	187.5 mm
Saddle stitcher is mounted	250 mm	

(c) Paper size

Type	Size
Regular size paper	• A6S, A5S, A5, B5S, B5, B6S, A4S, A4, B4, A3, SRA3, A3Wide, Post card S • 5 $^1/_2$ x 8 $^1/_2$S, 5 $^1/_2$ x 8 $^1/_2$, 7 $^1/_4$ x 10 $^1/_2$S, 7 $^1/_4$ x 10 $^1/_2$, 8 $^1/_2$ x 11S, 8 $^1/_2$ x 11, 8 $^1/_2$ x 14, 11 x 17, 12 $^1/_4$ x 18, 16KS, 16K, 8K
Custom size paper	• Max.: Width 320 mm x Length 457.2 mm • Min.: Width 130 mm x Length 139.7 mm

(2) Sub tray

(a) Max. capacity

Type	Basis weight	Max. capacity (Number of stacked sheets / Height of stacked sheets)
Thin paper	52 to 90 g/m^2 (13 13/16 to 24 lb)	200 sheets/ 35 mm*
Plain paper		
Recycled paper		
Thick paper 1	91 to 120 g/m^2 (24 1/4 to 32 lb)	20 sheets
Thick paper 1+	121 to 157 g/m^2 (32 1/4 to 41 3/4 lb)	
Thick paper 2	158 to 209 g/m^2 (42 to 55 1/2 lb)	
Thick paper 3	210 to 256 g/m^2 (55 3/4 to 68 lb)	
Thick paper 4	257 to 300 g/m^2 (68 1/4 lb to 79 3/4 lb)	
Post paper	190 g/m^2 (50 lb)	
OHP film	-	
Envelope	-	
Label	-	
Letterhead	-	
Index paper	-	
Long size paper	-	

- *: If either the number or height of stacked sheets reaches the specified value, “Tray paper full” is determined.

(b) Paper size

Type	Size
Regular size paper	• A6S, A5S, A5, B5S, B5, B6S, A4S, A4, B4, A3, SRA3, A3Wide, Post card S • 5 1/2 x 8 1/2S, 5 1/2 x 8 1/2, 7 1/4 x 10 1/2S, 7 1/4 x 10 1/2, 8 1/2 x 11S, 8 1/2 x 11, 8 1/2 x 14, 11 x 17, 12 1/4 x 18, 16KS, 16K, 8K
Custom size paper	• Max.: Width 320 mm x Length 1,200 mm • Min.: Width 90 mm x Length 139.7 mm

(3) Tray 3

(a) Max. capacity

Type	Basis weight	Max. capacity (Number of stacked sheets / Height of stacked sheets) *
Thin paper	52 to 90 g/m^2 (13 13/16 to 24 lb)	100 sheets/ 22.5 mm
Plain paper		
Recycled paper		
Thick paper 1	91 to 120 g/m^2 (24 1/4 to 32 lb)	20 sheets/ 22.5 mm
Thick paper 1+	121 to 157 g/m^2 (32 1/4 to 41 3/4 lb)	
Thick paper 2	158 to 209 g/m^2 (42 to 55 1/2 lb)	
Thick paper 3	210 to 256 g/m^2 (55 3/4 to 68 lb)	
Thick paper 4	257 to 300 g/m^2 (68 1/4 lb to 79 3/4 lb)	
Post paper	190 g/m^2 (50 lb)	
OHP film	-	
Envelope	-	
Label	-	
Letterhead	-	
Index paper	-	

- *: If either the number or height of stacked sheets reaches the specified value, “Tray paper full” is determined.

(b) Paper size

Type	Size
Regular size paper	• A6S, A5S, A5, B5S, B5, B6S, A4S, A4, B4, A3, SRA3, A3Wide, Post card S • 5 1/2 x 8 1/2S, 5 1/2 x 8 1/2, 7 1/4 x 10 1/2S, 7 1/4 x 10 1/2, 8 1/2 x 11S, 8 1/2 x 11, 8 1/2 x 14, 11 x 17, 12 1/4 x 18, 16KS, 16K, 8K
Custom size paper	• Max.: Width 320 mm x Length 1,200 mm • Min.: Width 90 mm x Length 139.7 mm

9.3.2 Sort offset/group offset

(1) Main tray

NOTE

- **If either the number or height of stacked sheets reaches the specified value, "Tray paper full" is determined.**

(a) Number of stacked sheets

Type	Basis weight	Max. number of stacked sheets		
		B5 or less	A5/A5S, B5	B4 or greater
Thin paper Plain paper Recycled paper	52 to 90 g/m^2 (13 13/16 to 24 lb)	500 sheets	• 3,000 sheets • 2,000 sheets (when S Saddle stitcher is mounted)	1,500 sheets
Thick paper 1	91 to 120 g/m^2 (24 1/4 to 32 lb)	20 sheets		
Thick paper 1+	121 to 157 g/m^2 (32 1/4 to 41 3/4 lb)			
Thick paper 2	158 to 209 g/m^2 (42 to 55 1/2 lb)			
Thick paper 3	210 to 256 g/m^2 (55 3/4 to 68 lb)			
Thick paper 4	257 to 300 g/m^2 (68 1/4 lb to 79 3/4 lb)			

(b) Height of stacked sheets

Paper length	Max. height of stacked sheets
• A4S or less • 8 $^1/_2$ x 11S or less	375 mm
• B4 or greater • 8 $^1/_2$ x 14 or greater	187.5 mm

(c) Paper size

Type	Size
Regular size paper	• A5, B5S, B5, A4S, A4, B4, A3, SRA3, A3Wide • 7 $^1/_4$ x 10 $^1/_2$S, 7 $^1/_4$ x 10 $^1/_2$, 8 $^1/_2$ x 11S, 8 $^1/_2$ x 11, 8 $^1/_2$ x 14, 11 x 17, 12 $^1/_4$ x 18, 16KS, 16K, 8K
Custom size paper	• Max.: Width 320 mm x Length 457.2 mm • Min.: Width 182 mm x Length 148.5 mm

9.3.3 Sort staple

(1) Main tray

(a) Paper capacity

Type	Basis weight	No. of sheets to be stapled	Max. capacity (Number of stacked sheets / Height of stacked sheets)*	
			• A4S or less • 8 1/2 x 11S or less	• B4 or greater • 8 1/2 x 14 or greater
• Thin paper • Plain paper • Recycled paper	52 to 90 g/m^2 (13 13/16 to 24 lb)	2 sheets to 9sheets	100 copies /375mm	100 copies / 187.5mm
		10 sheets to 20 sheets	50 copies / 375mm	50 copies / 187.5mm
		21 sheets to 30 sheets	30 copies / 375mm	30 copies / 187.5mm
		31 sheets to 40 sheets	25 copies / 375mm	25 copies / 187.5mm
		41 sheets or greater	20 copies / 375mm	20 copies / 187.5mm
Thick 1	91 to 120 g/m^2 (24 1/4 to 32 lb)	30 sheets or less	20 copies / 375mm	20 copies / 187.5mm
Thick 1+	121 to 157 g/m^2 (32 1/4 to 41 3/4 lb)	15 sheets or less	20 copies / 375mm	20 copies / 187.5mm
Thick 2	158 to 209 g/m^2 (42 to 55 1/2 lb)	15 sheets or less	20 copies / 375mm	20 copies / 187.5mm
Thick 3	210 to 256 g/m^2 (55 3/4 to 68 lb)	-	-	-
Thick 4	257 to 300 g/m^2 (68 1/4 lb to 79 3/4 lb)			

- *: If either the number or height of stacked sheets reaches the specified value, “Tray paper full” is determined.

(b) Paper size

Type	Size
Regular size paper	• A5, B5S, B5, A4S, A4, B4, A3 • 7 1/4 x 10 1/2S, 7 1/4 x 10 1/2, 8 1/2 x 11S, 8 1/2 x 11, 8 1/2 x 14, 11 x 17, 16KS, 16K, 8K
Custom size paper	• Max.: Width 297 mm x 431.8 mm • Min.: Width 182 mm x 148.5 mm

(c) Max. No. of sheets to be stapled

Mode	Max. No. of sheets to be stapled
Normal mode*	Thin paper/ Plain paper / Recycled paper: 50 sheets
	Thick paper 1: 30 sheets
	Thick paper 1+/ Thick paper 2: 15 sheets
Cover sheet mode	48 sheets (Thin paper/ Plain paper / Recycled paper) + 2 sheets (Thick paper)

- *: Maximum stapling sheets/ copies for printing high image density is 20 x 20 copies.

(d) Stapling position

Stapling position	Paper size
Back/Front of the corner (45 degree)	• B5, A4, B4, A3 • 8 1/2 x 11, 11 x 17
Back/Front of the corner (Parallel)	• A5, B5S, A4S • 8 1/2 x 11S, 8 1/2 x 14
Side: Parallel 2 point	• A5, B5S, B5, A4S, A4, B4, A3 • 8 1/2 x 11S, 8 1/2 x 11, 8 1/2 x 14, 11 x 17

9.4 Machine specifications

Power requirements	DC 24 V ± 10% (supplied from the main body)
Max. power consumption	56 W or less *1
Dimensions	• 528 mm (W) x 641 mm (D) x 1,023 mm (H) • 20.79 inch (W) x 25.24 inch (D) x 40.28 inch (H)
	• 658 mm (W) x 641 mm (D) x 1,065 mm (H) *2 • 25.91 inch (W) x 25.24 inch (D) x 41.9 inch (H) *2
Weight	40.0 kg / 88.19 lb

- *1: When it is installed to bizhub C364/C284/C224. If it is installed to bizhub C754/C654, maximum power consumption is 105 W or less.
- *2: Size when the paper output tray is pulled out

9.5 Operating environment

- Conforms to the operating environment of the main body.

9.6 Note for the Specifications

NOTE

- **These specifications are subject to change without notice.**

10. FS-534/FS-534SD

10.1 Type

Name	Multi staple finisher
Type	Freestanding
Document alignment	Center
Consumables	Staples (5,000 staples / cartridge)

10.2 Functions

Modes	• Sort • Group • Offset • Group • Offset • Sort staple

10.3 Paper

10.3.1 Non sort/sort/group

(1) Main tray

NOTE

- **If either the number or height of stacked sheets reaches the specified value, "Tray paper full" is determined.**

(a) Number of stacked sheets

Type	Basis weight	Max. number of stacked sheets		
		• A5/A5S or less • 8 1/2 x 11S or less	• B5/B5S or greater,A4S or less • 8 1/2 x 11S	• B4 or greater • 8 1/2 x 14 or greater
Thin paper	52 to 90 g/m^2	500 sheets	• 3,000 sheets • 2,000 sheets (when saddle stitcher is mounted)	1,500 sheets
Plain paper				
Recycled paper				
Thick paper 1	91 to 120 g/m^2	20 sheets		
Thick paper 1+	121 to 157 g/m^2			
Thick paper 2	158 to 209 g/m^2			
Thick paper 3	210 to 256 g/m^2			
Thick paper 4	257 to 300 g/m^2			
OHP film	-			
Envelope	-			
Label	-			
Letterhead	-			

(b) Height of stacked sheets

State	Max. height of stacked sheets	
	• Paper length is A4S 11S or less • Paper length is 8 $^1/_2$ x 11S or less	• Paper length is B4 or greater • Paper length is 8 $^1/_2$ x 14 or greater
Standard (saddle stitcher is not mounted)	375 mm	187.5 mm
Saddle stitcher is mounted	250 mm	

(c) Paper size

Type	Size
Regular size paper	• A6S • A5S • A5 • B5S • B5 • B6S • A4S • A4 • B4 • A3 • SRA3 • A3Wide • Post card S • 5 1/2 x 8 1/2S • 5 1/2 x 8 1/2 • 7 1/4 x 10 1/2S • 7 1/4 x 10 1/2 • 8 1/2 x 11S • 8 1/2 x 11 • 8 1/2 x 14 • 11 x 17 • 12 1/4 x 18 • 16K S • 16K • 8K
Custom size paper	• Max.: Width 320 mm x Length 457.2 mm • Min.: Width 130 mm x Length 139.7 mm

(2) Sub tray

(a) Max. capacity

Type	Basis weight	Max. capacity (Number of stacked sheets / Height of stacked sheets)
Thin paper	52 to 90 g/m^2	200 sheets/ 35 mm*
Plain paper		
Recycled paper		
Thick paper 1	91 to 120 g/m^2	20 sheets
Thick paper 1+	121 to 157 g/m^2	
Thick paper 2	158 to 209 g/m^2	
Thick paper 3	210 to 256 g/m^2	
Thick paper 4	257 to 300 g/m^2	
Post paper	190 g/m^2	
OHP film	-	
Envelope	-	
Label	-	
Letterhead	-	
Index paper	-	
Long size paper	91 to 300 g/m^2	

• *: If either the number or height of stacked sheets reaches the specified value, “Tray paper full” is determined.

(b) Paper size

Type	Size
Regular size paper	• A6S • A5S • A5 • B5S • B5 • B6S • A4S • A4 • B4 • A3 • SRA3 • A3Wide • Post card S • 5 1/2 x 8 1/2S • 5 1/2 x 8 1/2 • 7 1/4 x 10 1/2S • 7 1/4 x 10 1/2 • 8 1/2 x 11S • 8 1/2 x 11 • 8 1/2 x 14 • 11 x 17 • 12 1/4 x 18 • 16K S • 16K • 8K
Custom size paper	• Max.: Width 320 mm x Length 457.2 mm • Min.: Width 130 mm x Length 139.7 mm

10.3.2 Sort offset/group offset

(1) Main tray

NOTE

- **If either the number or height of stacked sheets reaches the specified value, "Tray paper full" is determined.**

(a) Number of stacked sheets

Type	Basis weight	Max. number of stacked sheets		
		• less than B5	• A4/A4S, B5 • 8 1/2 x 11, 8 1/2 x 11S	• B5S • B4 or greater • 8 1/2 x 14S
Thin paper	52 to 90 g/m2	500 sheets	• 3,000 sheets • 2,000 sheets (when Saddle stitcher is mounted)	1,500 sheets
Plain paper				
Recycled paper				
Thick paper 1	91 to 120 g/m2	20 sheets		
Thick paper 1+	121 to 157 g/m2			
Thick paper 2	158 to 209 g/m2			
Thick paper 3	210 to 256 g/m2			
Thick paper 4	257 to 300 g/m2			

(b) Height of stacked sheets

Paper length	Max. height of stacked sheets
• A4S or less • 8 1/2 x 11S or less	375 mm
• B4 or greater • 8 1/2 x 14 or greater	187.5 mm

(c) Paper size

Type	Size
Regular size paper	• A5 • B5S • B5 • A4S • A4 • B4 • A3 • SRA3 • A3Wide • 7 1/4 x 10 1/2S • 7 1/4 x 10 1/2 • 8 1/2 x 11S • 8 1/2 x 11 • 8 1/2 x 14 • 11 x 17 • 12 1/4 x 18 • 16K S • 16K • 8K
Custom size paper	• Max.: Width 320 mm x Length 457.2 mm • Min.: Width 182 mm x Length 148.5 mm

10.3.3 Sort staple

(1) Main tray

(a) Paper capacity

Type	Basis weight	No. of sheets to be stapled	Max. capacity (Number of stacked sheets / Height of stacked sheets)*	
			• A4S or less • 8 1/2 x 11S or less	• B4 or greater • 8 1/2 x 14 or greater
• Thin paper • Plain paper • Recycled paper	52 to 90 g/m2	2 sheets to 9sheets	100 copies /375mm	100 copies / 187.5mm
		10 sheets to 20 sheets	50 copies / 375mm	50 copies / 187.5mm
		21 sheets to 30 sheets	30 copies / 375mm	30 copies / 187.5mm
		31 sheets to 40 sheets	25 copies / 375mm	25 copies / 187.5mm
		41 sheets or greater	20 copies / 375mm	20 copies / 187.5mm
Thick 1	91 to 120 g/m2	30 sheets or less	20 copies / 375mm	20 copies / 187.5mm
Thick 1+	121 to 157 g/m2	15 sheets or less	20 copies / 375mm	20 copies / 187.5mm
Thick 2	158 to 209 g/m2	15 sheets or less	20 copies / 375mm	20 copies / 187.5mm
Thick 3	210 to 256 g/m2	-	-	-
Thick 4	257 to 300 g/m2			

• *: If either the number or height of stacked sheets reaches the specified value, “Tray paper full” is determined.

(b) Paper size

Type	Size
Regular size paper	• A5 • B5S • B5 • A4S • A4 • B4 • A3 • 7 1/4 x 10 1/2S • 7 1/4 x 10 1/2 • 8 1/2 x 11S • 8 1/2 x 11 • 8 1/2 x 14 • 11 x 17 • 16K S • 16K • 8K
Custom size paper	• Max.: Width 297 mm x 431.8 mm • Min.: Width 182 mm x 148.5 mm

(c) Max. No. of sheets to be stapled

Mode	Max. No. of sheets to be stapled
Normal mode*	Thin paper/ Plain paper / Recycled paper: 50 sheets
	Thick paper 1: 30 sheets
	Thick paper 1+/ Thick paper 2: 15 sheets
Cover sheet mode	48 sheets (Thin paper/ Plain paper / Recycled paper) + 2 sheets (Thick paper)

- *: Maximum stapling sheets/ copies for printing high image density is 20 x 20 copies.

(d) Stapling position

Stapling position	Paper size
Back/Front of the corner (45 degree)	• A4 • A3 • B5 • B4 • 8 1/2 x 11 • 11 x 17
Back/Front of the corner (Parallel)	• A4S • B5S • A5 • 8 1/2 x 11S • 8 1/2 x 14
Side: Parallel 2 point	• A4S • A4 • A3 • B5S • B5 • B4 • A5 • 8 1/2 x 11S • 8 1/2 x 11 • 8 1/2 x 14 • 11 x 17

10.4 Machine specifications

Power requirements	DC 24 V ± 10% (supplied from the main unit)
Max. power consumption	105 W or less *1
Dimensions	• 528 mm (W) x 641 mm (D) x 1,023 mm (H) • 20.79 inch (W) x 25.24 inch (D) x 40.28 inch (H)
	• 658 mm (W) x 641 mm (D) x 1,065 mm (H) *2 • 25.91 inch (W) x 25.24 inch (D) x 41.9 inch (H) *2
Weight	40.0 kg / 88.19 lb

- *1: When it is installed to bizhub C754e/C654e. If it is installed to bizhub C364/C284/C224, maximum power consumption is 56 W or less.
- *2: Size when the paper output tray is pulled out

10.5 Operating environment

- Conforms to the operating environment of the main unit.

10.6 Note for the Specifications

NOTE

- **FS-534SD is such a product where SD-511 has been preinstalled on FS-534. The specifications are same as FS-534 and SD-511.**
- **These specifications are subject to change without notice.**

11. PK-520

11.1 Type

Name	Punch kit
Type	FS-integrated type punching operation device

11.2 Functions

Punching method	Stops and punches every paper
No. of holes	2-3 holes, 2-4 holes, Sweden 4 holes
Hole diameter	• 2 holes / φ 8.0 mm - 3 holes /φ8.0 mm • 2 holes /φ6.5 mm - 4 holes /φ6.5 mm • Sweden 4 holes /φ6.5 mm
Hole pitch	• 2 holes / 70 mm pitch - 3 holes / 108 mm pitch • 2 holes / 80 mm pitch - 4 holes / 80 mm pitch • Sweden 4 holes / 70 mm, 21 mm pitch
Supported mode	Punch mode
Applicable post processing mode	Sort, Group, Staple

11.3 Paper

Size	2-3 holes punch unit	• 2 holes punch setting: 11 x 17, 8 $^{1}/_{2}$ x 14, 8 $^{1}/_{2}$ x 11/8 $^{1}/_{2}$ x 11S • 3 holes punch setting: 11 x 17, 8 $^{1}/_{2}$ x 11
	2-4 holes punch unit	2-4 holes punch setting: A3, B4, A4, B5
	Sweden 4 holes punch unit	4 holes punch setting: A3, B4, A4/A4S, B5
Supported paper	Conforms to the main body. • Thin paper (52 g/m^2 to 59 g/m^2 / 13 $^{13}/_{16}$ lb to 15 $^{11}/_{16}$ lb) • Plain paper (60 g/m^2 to 90 g/m^2 / 15 $^{15}/_{16}$ lb to 23 $^{15}/_{16}$ lb) • Thick 1 (91 g/m^2 to 120 g/m^2 / 24 $^{3}/_{16}$ lb to 31 $^{15}/_{16}$ lb) • Thick 1+ (121 g/m^2 to 157 g/m^2 / 32 $^{3}/_{16}$ lb to 41 $^{3}/_{4}$ lb) • Thick 2 (158 g/m^2 to 209 g/m^2 / 42 lb to 55 $^{5}/_{8}$ lb) • Thick 3 (210 g/m^2 to 256 g/m^2 / 55 $^{7}/_{8}$ lb to 68 $^{1}/_{8}$ lb) • Thick 4 (257 g/m^2 to 300 g/m^2 / 68 $^{3}/_{8}$ lb to 79 $^{13}/_{16}$ lb)	
Punch prohibited paper	• Label paper, Tab paper, OHP film, 2nd base paper, Holed paper • Other paper that may interfere with the operation of the punch kit or the punch blade	

11.4 Machine specifications

Power requirements	• DC 24 V (supplied from the finisher)
	• DC 5 V (supplied from the finisher)
Max. power consumption	• Included in the max. power consumption of finisher
Dimensions	• 61 mm (W) x 492 mm (D) x 142 mm (H) • 2.4 inch (W) x 19.37 inch (D) x 5.59 inch (H)
Weight	Approx. 1.8 kg (3.97 lb)

11.5 Operating environment

- Conforms to the operating environment of the main body.

11.6 Note for the Specifications

NOTE

- **These specifications are subject to change without notice.**

12. SD-511

12.1 Type

Name	Center-staple and tri-fold device SD-511	
Type	Finisher-contained center-staple and tri-fold device	
Document alignment	Center	
Stapling function	Center parallel two points using a fixed stapler	
Paper exit tray	Saddle tray	
Mode	Saddle stitching	Normal mode, Cover mode, Thick paper mode
	Folding	Normal mode, Thick paper mode
	Tri-folding	

12.2 Paper

12.2.1 Saddle stitching/folding

Supported paper in saddle stitching/ folding	• Thin paper (52 g/m^2 to 59 g/m^2 / 13 $^{13}/_{16}$ lb to 15 $^{11}/_{16}$ lb) • Plain paper (60 g/m^2 to 90 g/m^2 / 15 $^{15}/_{16}$ lb to 23 $^{15}/_{16}$ lb) • Thick 1 (91 g/m^2 to 120 g/m^2 / 24 $^{3}/_{16}$ lb to 31 $^{15}/_{16}$ lb) *1, *2 • Thick 1+ (121 g/m^2 to 157 g/m^2 / 32 $^{3}/_{16}$ lb to 41 $^{3}/_{4}$ lb) *1, *2 • Thick 2 (158 g/m^2 to 209 g/m^2 / 42 lb to 55 $^{5}/_{8}$ lb) *1, *2
Supported paper sizes	• A4S, B4, A3, A3 wide, LetterS, Legal, Ledger, 8K • Custom size paper (Width: 210mm to 311.2mm, length: 279.4 mm to 457.2 mm)
Supported mode and basis weight	Normal mode: 52 g/m^2 to 90 g/m^2 / 13 $^{13}/_{16}$ lb to 23 $^{15}/_{16}$ lb
	Cover mode: 52 g/m^2 to 209 g/m^2 / 13 $^{13}/_{16}$ lb to 55 $^{5}/_{8}$ lb *3
	Thick paper mode: 91 g/m^2 to 209 g/m^2 / 24 $^{3}/_{16}$ lb to 55 $^{5}/_{8}$ lb
Number of sheets stacked on the saddle tray	1 sheet to 3 sheets: 20 copies
	4 sheets to 10 sheets: 10 copies
	11 sheets to 20 sheets: 5 copies
Number of stitching sheets	Normal mode: 2 sheets to 20 sheets (maximum 80 pages)
	Cover mode: 2 sheets to 20 sheets (maximum 80 pages) *4
Number of folding sheets	Normal mode: 5 sheets
	Thick paper mode: 1 sheet

- *1: For saddle stitching, available only with 1 cover sheet of cover mode
- *2: For folding, available only with 1 cover sheet
- *3: Use only 1 sheet as a cover sheet for cover mode
- *4: Cover sheet : 1 sheet (52 g/m^2 to 209 g/m^2 / 13 $^{13}/_{16}$ lb to 55 $^{5}/_{8}$ lb) + body page: 19 sheets (52 g/m^2 to 90 g/m^2 / 13 $^{13}/_{16}$ lb to 23 $^{15}/_{16}$ lb)

12.2.2 Tri-folding

Supported paper in tri-folding	• Thin paper (52 g/m^2 to 59 g/m^2 / 13 $^{13}/_{16}$ lb to 15 $^{11}/_{16}$ lb) • Plain paper (60 g/m^2 to 90 g/m^2 / 15 $^{15}/_{16}$ lb to 23 $^{15}/_{16}$ lb)	
Supported paper sizes	A4S, 8 $^{1}/_{2}$ x 11S, 16KS	
Number of tri-folding sheets and copies *	1 sheet folding	30 copies
	2 sheets folding	10 copies
	3 sheets folding	

- *: Up to 3 sheets in tri-folding

12.3 Machine specifications

Power requirements	DC 24 V (supplied from the finisher)
	DC 5 V (supplied from the finisher)
Max. power consumption	Included in the max. power consumption of FS-534
Dimensions	• 210 mm (W) x 556 mm (D) x 547 mm (H) • 8.27 inch (W) x 21.89 inch (D) x 21.54 inch (H)
Weight	Approx. 24 kg (52.91 lb)

12.4 Operating environment

- Conforms to the operating environment of the main body.

12.5 Consumables

- 5,000 staples / cartridge

12.6 Note for the Specifications

NOTE

- **These specifications are subject to change without notice.**

13. i-Option LK-101 v3/102 v2/104 v3/105 v3/106/107/108/110/111

13.1 Available function for i-Option

- The functions available for i-Option are as follows.

⚠CAUTION

- **Using the web browser function available with this machine, the contents on the Internet can be accessed from the control panel. Users are responsible for the contents that they access, download, or upload as well as the contents of other communication. Users shall follow the rules of their company and laws of their country. Konica Minolta Business Technologies, Inc. and its group companies accept no responsibility for the users' use of the Internet.**

13.1.1 List of advanced functions

Function	Overview
Web browser *1	You can access contents on the Internet or corporate networks through this machine connected to the network to enable page viewing or file printing. You can also access other MFP connected to the network to use a User Box in the MFP via Web Connection.
Voice guidance	This function also helps people who have difficulty viewing the screen to carry out operations more smoothly via voice guidance. It is available on the Enlarge Display screen, Guidance screen, or Accessibility Settings screen. English and Japanese are available.
PDF processing	Allows you to use features such as encryption of a PDF file, addition of an electronic signature, addition of file properties, creation of a PDF/A-based PDF file, and PDF linearization when sending a PDF file.
Encryption PDF (Digital ID)	Allows you to encrypt the PDF using a user digital signature when sending a PDF file.
Searchable PDF	Allows you to paste transparent text data into a PDF file when converting scanned original data into PDF files, and create a searchable PDF file. This function automatically creates text information from scanned images using OCR character recognition technology.
Searchable PDF (Fax RX Document)	Allows you to create a text searchable PDF file when converting a received fax into a PDF file using the Forward TX function or TSI Routing function and sending it to PC.
OOXML File Conversion	Allows you to send or store the scanned original data by converting it into an OOXML (DOCX or XLSX) file. Also allows you to paste transparent text data and create a text searchable OOXML file. This function automatically creates text information from scanned images using OCR character recognition technology.
Compact PDF (Print RX Document)	Allows you to select a file type as Compact PDF when fetching the data stored in the box of this machine using the printer driver and sending it by E-mail or sending it to PC.
High image quality compact PDF	This function improves the image processing accuracy when creating a Compact PDF data. This function improves the reproducibility of the colored characters or lines. Also, it allows you to set the reversed characters as the texts to be searched.
Barcode font	Allows you to generate a bar code based on data sent to this machine from the ERP (Enterprise Resource Planning) system, and print it from this machine. You can directly print data without using the printer driver.
Unicode font	Allows you to print text information (unicode) of multiple languages sent to this machine from the ERP (Enterprise Resource Planning) system. You can directly print data without using the printer driver.
OCR font	OCR font can be used on this machine.
E-mail RX Print	Allows you to print the file attached to an E-mail from this machine when the E-mail has been sent to the address of this machine.
ThinPrint function	Allows you to enable the ThinPrint function on this machine. ThinPrint is such a function allows you to make a speedy print by compressing the data or controlling the marginal zone when sending a print job from ThinPrint Engine (.print Engine) to ThinPrint Client (.print Client). This machine operates as ThinPrint Client (.print Client).
My Panel	Allows you to use the touch panel, which is customized only for you, through any MFP connected to the network. The touch panel customization settings are stored on the My Panel Manager server. If necessary, they can be changed on My Panel Manager.
My Address	Allows you to use a dedicated address book through any MFP connected to the network. The dedicated address book is stored on the My Panel Manager server. If necessary, it can be edited on My Panel Manager.

- *1: To be released soon.
- *2: OCR font is standardized font that enables text to be appropriately recognized when the OCR (Optical Character Recognition) is used.

13.1.2 Types of advanced functions

NOTE

- **To use the i-Option functions, the upgrade kit UK-204 must be installed.**
- **To use web browser function, it is necessary to rewrite the firmware to MFP card version: A1610Y0-F000-G20-58, set switch No. 150 to [00000001] at Bit assignment/[01] at HEX assignment in [Service Mode] -> [System 2] -> [Software Switch Setting], then activate the i-Option license(LK-101 v3).**

(1) Table 1

Function	Kit name				
	Upgrade kit	i-Option			
	UK-204	LK-101 v3	LK-102 v3	LK-104 v3	LK-105 v3
Web browser	○	○	-	-	-
PDF processing	○	-	○	-	-
Voice guidance *1	○	-	-	○	-
Searchable PDF	○	-	-	-	○

- *1: To use voice guidance, in addition to the LK-104 license activation, the optional local interface kit EK-606 or EK-607 must be installed.

(2) Table 2

Function	Kit name			
	Upgrade kit	i-Option		
	UK-204	LK-106	LK-107	LK-108
Barcode font	○	○	-	-
Unicode font	○	-	○	-
OCR font	○	-	-	○

(3) Table 3

Function	Kit name		
	Upgrade kit	i-Option	
	UK-204	LK-110	LK-111
Searchable PDF (Fax RX Document)	○	○	-
Compact PDF (Print RX Document)	○	○	-
High image quality compact PDF	○	○	-
Encryption PDF (Digital ID)	○	○	-
OOXML File Conversion	○	○	-
E-mail RX Print	○	○	-
ThinPrint function	○	-	○

(4) Table 4

Function	Kit name		
	Upgrade kit	My Panel Manager	
	UK-204	Application license	Device license
My Panel	○	○	○
My Address	○	○	○

13.1.3 Activation procedures of i-Option

For details of the activation procedures, refer to the followings.

- Activation via Administrator Settings: I.7.100 License Settings
- Activation via Service Mode: I.13.3.10 License management - Activation

13.2 Web browser function

- Main specifications of the web browser installed are as follows.

Browser engine	Webkit
Supported protocols	• HTTP (HTTP 0.9/1.0/1.1) • HTTPS • TCP/IP
Supported markup languages	• HTML 4.01 • a part of HTML 5.0 • XHTML 1.1/Basic
Style sheet	• CSS1 • CSS2 • CSS3
Script language	• JavaScript 1.7 • ECMAScript 3rd Edition • Ajax *1
DOM	• Level 1 • Level 2
File formats	• JPEG • BMP • PNG

	• GIF • Animation GIF • PDF • Flash 8 and earlier
Supported SSL/TLS versions	• SSL3.0 • TLS1.0
Supported character codes	• Japanese (Shift_JIS) • Japanese (ISO-2022-JP) • Japanese (EUC-JP) • Chinese Simplified (GB2312) • Chinese Traditional (Big5) • Western European (ISO-8859-1) • Unicode (UTF-8)
PDF viewer	Adobe® Reader® LE
Flash player	Adobe® Flash® Player 8

- *1: Limited to the JavaScript-supported range only.

NOTE

The Flash player installed on the MFP does not support the following:

- **The function to trigger an event caused by a key operation.**
- **The function to paste or acquire data such as character strings from the clipboard.**
- **The context menu.**
- **The Flash printing function.**
- **The function to execute JavaScript from Flash or to operate Flash by JavaScript.**
- **A screen that has no window (pop-up).**
- **The Flash bookmark function.**
- **The function to send/receive data in real time using the Flash Media Server.**
- **The function to communicate via the XMLSocket.**

NOTE

- **When using a web browser function, 26 dots from the perimeter of the touch panel area is not sensitive area.**
  It is possible to narrow the non-sensitive area by using [Software Switch Setting] in Service Mode as with followings. However, the touch panel cannot detect touch operation correctly.
  - Switch No.143 [00000000] at Bit assignment/[00] at HEX assignment non-sensitive area: 26 dots from the perimeter of the touch panel
  - Switch No.143 [00000001] at Bit assignment/[01] at HEX assignment non-sensitive area: 16 dots from the perimeter of the touch panel
  - Switch No.143 [00000010] at Bit assignment/[02] at HEX assignment non-sensitive area: 9 dots from the perimeter of the touch panel

14. FK-511/508

14.1 Basic specifications

14.1.1 General specifications

Applicable lines	PSTN, PBX	
Protocol	Group 3 (compliant to ITU-T T.30) • ECM • F-code communication • Konica Minolta non-standard protocol: No • Group 4: No	
Maximum data rate	33,600 bps	
Coding method	• MH • MR • MMR • JBIG	
Modulation method	• V27ter • V29 • (V.33): V.33 is for reception only. • V17 • V8 • V34	
Communication resolution	Normal	8 x 3.85 lines / mm
	Fine	• 8 x 7.7 lines / mm • 200 x 200 pixels / inch
	Super fine	• 8 x 15.4 lines / mm (Reception only) • 16 x 15.4 lines / mm • 400 x 400 pixels / inch
	Ultra fine	600 x 600 pixels / inch
	• Fixed to mm at transmission (except 600 dpi) • mm and inch are available at reception. • Selection by using the [Resolution] key. • You can not change settings on every page.	
Fax memory size	• 128 GB (128 GB in the main body HDD 250 GB is used as a memory.) • 10000 pages can be stored including all Scan/Box/Printer/Fax documents.	
FAX memory backup	Image data is saved in HDD.	
Multiple line connection	Four lines can be connected by installing four fax kit. (FK-511 x 2units and FK-508 x 2units)	
Communication time	Level of 2 seconds (Konica Minolta standard A4 chart, 33,600 bps)	
Resolution conversion	At sending: • Scanner: inch • Density conversion: inch -> mm • Communication: mm / inch (600 dpi only)	
	At receiving (mm): • Communication: mm • Density conversion: mm -> inch • Print: inch	
	At receiving (inch): • Communication: inch • Density conversion: inch -> inch • Print: inch	

14.1.2 Scanning section

Scanning method	Platen documents	Impossible to scan book documents (book mode)
	DF book documents	• Scanning mode: 1-Sided, 2-Sided and cover + 2-Sided • Possible to scan the DF mixed size documents.
Scanning resolution	Normal	8 x 3.85 lines/mm
	Fine	8 x 7.7 lines/mm
	Super fine	16 x 15.4 lines /mm
	Ultra Super fine	600 x 600 dpi
	• Selection by using the [Resolution] key. • You can not change settings on each page.	
Mixed original	Possible to mix documents of different sizes. • After rotation of images, sizes are changed by EOM every time the length of the scan line is changed at sending. • Possible to mix sizes (A and B).	
Density selection	Selection by using the [Density] key. [Light] / [Standard] / [Dark] • You can not change settings on each page.	
Maximum scanning document width	297 mm (A3 width) both for DF and Platen	

Maximum scanning document length	Regular mode	431.8 mm / 17 inches
	Long original mode	1000 mm
Effective scanning range	When a document is smaller than the effective scanning area, the area outside the document is erased. • DF scanning: left, right, head and bottom mask of 3mm each (0 to 5mm) • Platen scanning: left, right and head mask of 2mm each (fixed)	
Automatic reduction at sending	A3 -> B4, A3 -> A4 and B4 -> A4 • Automatically reduced and sent in accordance with the recording paper size of remote station.	
Rotation transmission	A4 / Letter size only. LEF documents are rotated by 90 degrees at sending to send it in SEF direction.	
Page division at sending	No	
Halftone	256 level error diffusion • Users can change settings by using the [Text], [Text/Photo, Printed] , [Text/Photo, PhotoPaper], [Photo, Printed] , [Photo, PhotoPaper], [Dot Matrix Original] or [Copied Paper] key.	
Automatic background control (ABC)	Yes	
Finished stamp	Yes	
Scanning time	When DF-624 is installed	80 sheets/min, (AI letter ($8\frac{1}{2}$ x 11)or A4, scanning,300dpi)
	When DF-701 is installed	
Automatic feeder capacity	Compliant to the copier standards	

14.1.3 Recording section

Recording	Laser electrostatic printing system
Recording paper size	• All sizes except for B6 and Postcard (See the copier basic specifications.) • Auto recording paper selection • Note: A5 and B5 paper is used only for A5 and B5 reception respectively
Recording paper cassette	• Tray 1 to Tray 4 • Bypass Tray
Staple	No
Recording speed	Compliant to the copier standards
Recording size	A3 size maximum • A3 fix as reception record ability declaration in protocol.
Maximum reception length	1000 mm • In case of being larger than the maximum reception length, a communication error occurs. • When the memory over occurs during reception, the received data is printed.
Reduction record	When the received image information is larger than the recording paper, it is automatically reduced to the recording paper size and recorded.
Page separation record	Yes
Offset output at each communication	Yes (Job unit reception only)
Rotation reception	Yes • Images are rotated by 90 degrees and recorded on the recording paper in LEF direction.
Two-sided reception	Yes (Utility Mode)
2-in-1 reception	No
Smoothing	Yes (at converting the resolution)
Print/Fax output settings	Yes
Bypass print	Possible to use as an active tray in auto selection mode.
Total page counter	Yes
Monitor print	No (copy at sending)

14.1.4 Line connecting section

NCU type	A-A~, line control by silicon DAA
Connecting terminal	RJ11
Modem	Matsushita MMD-5020
Modem sending level	-10 to -15 dBm (Country spec)
DTMF sending level	-10 to -15 dBm (Country spec)
Receiving sensitivity	• G3 reception: up to -48 dB • Tone reception: up to -52 dB
Dialing signal	DP (10pps) and DTMF

14.1.5 Operation panel

FAX / copy / scan / box	Mode switching	by panel key selection • Possible to change modes during an operation of each mode. • No mode return by the auto reset.

	Initial screen after power-on	Screen at power off or facsimile screen. (depending on parameter setting)
Interruption during scanning	When pressing the interrupt key while scanning documents to be transmitted, INTERRUPT LED blinks. Copy screen appears after scanning is completed.	
Interruption during recording in the FAX mode screen	Operations by using the interrupt key are invalid.	
FAX start	by using the start key.	
Stop	by using the stop key. • Possible to appoint to stop from the job list so as to stop during operations of the multi jobs.	
FAX free memory display	RDH memory • % indication on LCD during scanning, recording and stand-by. File memory (RAM disk/HDD) • Display in the JOB LIST screen	
File existence indication	In the following cases, the data Indicator (LED) on the control panel lights up. • Upon reception of FAX • When a document is saved in the bulletin board box, polling TX box, and memory RX user box.	
Display during the FAX communications	Icons are not displayed on the FAX waiting screen and the FAX operation screen.	
Error display	Displayed by LCD panel	
Time display	Date and time displayed. • Present time is displayed on the sub-area.	
Remote station ID display	Yes • The TSI/CSI display during communications	
Other operation keys	[Application] key: Moves to the FAX application function setting screen. • Check Setting key: Valid • */# button: Yes • Help button: Yes	

14.2 Functional specifications

14.2.1 Dial functions

Abbreviated dial	Yes • Possible to register 2000 stations. (1000 with no HDD installed) • 38 digits maximum • Possible to search the remote station list in the order of abbreviation numbers and Indexes. • The registration names must be 24 digits or less. • Registration name auto registration function: No • Second FAX No. registration function: No • Impossible to register the communication mode. • Possible to register Line Setting (Overseas TX, ECM Off, V.34 OFF, check destination, line selection (Only with four fax kit installed)). • There is no registration function provided of [Scan Setting], [Comm. Setting] except the line setting.
Program dial	400 dials (200 with no HDD installed)
Key pad dial	38 digits maximum
Group dial	Up to 100 groups. Possible to register group names. up to 500 remote stations per each group by abbreviated numbers only.
Dialing of multiple remote stations	605 remote stations maximum (abbreviated 500 + key pad 100 + manual input e-mail destination 5)
Manual redial	Yes • Possible to select from five latest histories.
Automatic redial	Yes • Automatically redial when remote stations are busy or return no responses or transmission errors occur at the memory transmission • Possible to receive during redial waiting. • Another call is possible. (Not possible when there are two redial waiting jobs.)
JOB LIST redial	No
Pulse/tone switching	Possible to switch by using the [*] key on the key pad or [Tone] key on the Direct Input screen.
PBX mode setting	Yes • Possible to turn ON or OFF the PBX connection and to register the external access code. • There is the automatic removal function of external access code to registered abbreviated remote station No. Nothing is automatic addition function.
Pseudo off-hook	Yes • The manual start is possible by using the pseudo off-hook. • [Off-Hook] key on LCD
Call progress detection	DC loop (Depends on country spec). • Dial tone (Ditto) • Busy tone (Ditto) • Second dial tone (Ditto)
Dial parameters	Dialing signals DP (10 pps) and DTMF (Depends on country spec) • Pause between digits1 to 7 seconds (Users cannot set.)

	• Pause between digits 3 seconds (fixed)
Phone book dial (Abbr)	Yes • After appointing character to search, use up and down cursor keys.
External phone connection jack	Yes • Depends on specifications of each country.

14.2.2 Transmission

Timer transmission	24-hour (max.) timer setting is possible. (one station, sequential multi-stations transmission)		
Batch transmission	No		
Timer polling	24-hour (max.) timer setting is possible. (one remote station polling and sequential polling reception)		
No. of timers	• 21 transmissions and pollings in total. • The number of sequential pollings is one.		
Memory transmission reservation	The memory transmission reservation is possible during communications. (memory registration of the DF memory transmission and platen memory transmission documents)		
DF transmission reservation	No		
Fold erase transmission	No		
Frame erase transmission	Yes • Platen documents and book documents • DF documents are possible as well. • The regular mode only		
Automatic layout transmission (Outside documents are erased.)	No		
Reverse-image transmission	No		
2-in-1 transmission	No		
Book transmission	No		
Scanning size appointment	Yes • Scans documents in the appointed size irrelevant to document sizes and sends them. Transmits documents in the appointed scanning width and length at the platen transmission and the DF transmission. • The effective image area is based on the center in the DF transmission. (Corner-base scanning in mixed-size document mode.)		
Document image quality appointment	Yes • Selected from [Text], [Text/Photo, Printed] , [Text/Photo, PhotoPaper], [Photo, Printed] , [Photo, PhotoPaper], [Dot Matrix Original] or [Copied Paper].		
Multi-stations	605 stations maximum (Abbr dial x 500 stations, keypad dial x 100 stations and E-Mail x 5) The timer appointment is possible.		
Memory transmission	Yes		
	Quick memory transmission	DF transmission	Varies depending on models.
		Platen transmission	One page only
		Mixture of DF/platen documents	No
		Advanced communication function	Partly Yes (Only the communication mode is possible)
		Manual transmission	Yes
		Transmission when the printer is active	No
	Memory transmission	DF transmission	Yes
		Platen transmission	Yes After the Separate Scan setting, the setting is read with the [Start] key and the communication is started up with the [Finish] key.
		Mixture of DF/platen documents	Yes After the Separate Scan setting, the setting is read with the [Start] key and the communication is started up with the [Finish] key.
		Advanced communication function	Yes
		Manual transmission	No
		Transmission when the printer is active	Yes
Forwarding transmission	Yes • Automatic forward: Automatic forward of received documents to remote stations registered in advance. • Manual forward: No		
Interruption transmission	Single station transmission reservation automatically interrupts between stations of multiple station communications.		

International communication	Yes • When the remote station is V17, communications start at TCM 7,200 bps. When the remote station is V34, they start at 28,800 bps.
V34-off transmission	Transmitted without V34 mode. The V34-off appointment can be registered in the abbreviated / program dials. This is used when the transmission error code related to V34 occurs frequently.
Long original transmission	Yes
DF irregular-size transmission	Possible to transmit irregular-size originals from DF. The main scanning is the max. document width set on DF, and the sub scanning depends on document length. • Width: 297 mm/11.69 inch at the maximum • Length: 1000 mm/39.37 inch at the maximum
Incomplete TX hold	Yes
Instant batch transmission (Bundled transmission)	No
Confidential transmission	Transmission to the confidential BOX of a remote station by using the F code (SUB/SID). Appoints the confidential BOX No. by using SUB. Set the communication password using SID as required.
Relay request	The relay request by using the F-code (SUB/SID). Appoints the relay BOX No. by using SUB.
Relay transmission	No
Transmission error prevention	• Check destination: When transmitting, compares the FAX No. specified with the FAX No. information (CSI) of the remote station and transmits only when both numbers are the same. • Destination check display function: When transmitting, displays the list of addresses to allow to check the address again and then transmit. • Restrict FAX broadcasting: Prohibits to specify multiple addresses for FAX transmission.
Confirm Address (at calling and registration)	• During direct dialing, call is initiated only if the destination number inputted a first time matches with that inputted a second time.

14.2.3 Polling

Polled transmission	• There is one documents which allows the transmission setting. • Documents are deleted after transmission. • No additional scanning of documents • No DF polled transmission reservation
Polling reception	The sequential polling is possible. 600 stations maximum (abbreviated dial x 500 stations and key pad dialing x 100 stations)
Call turnaround polling	No
Called turnaround polling	Yes
Closed polling transmission	No
Selective polling	• Transmission and reception. • The selective polling by using the F-code (SEP). There is a bulletin board BOX polling reception. • No confidential BOX polling transmission

14.2.4 Line seizure mode and telephone function

Line seizure mode switching	Possible to set the automatic reception and the manual reception. • When the memory is full and there are no polling transmission reservations, the automatic reception mode is cancelled. • No switching of the auto / manual mode by appointing data and time
Ans. Machine mode	Yes • At the time of the CNG detection with the external phone off hook, a line is caught to start reception.
Automatic reception mode	Time and the number of rings. • No. of rings: 0 to 15 times (country spec) • Time: 0 to 15 secs (country spec)
Hold	No
Handset	No
One-piece phone	Country spec
Call to external telephone	No
Conversation reservation	No

14.2.5 Message reception and record

Confidential reception	Reception at the confidential BOX appointed at the F-code (SUB). When a transmission password (SID) has been set for the confidential box, the SID should be specified as the communication password. At the time of printing documents received at the confidential BOX, a password to access to the confidential BOX is required.
Closed reception	Closed reception by using the SID (PWD) (Junk FAX)
Adaptive (automatic) reduction	87 to 96 % in steps of 1 % Becomes the adaptive reduction when “Print Separate Fax Pages = OFF” is selected. In case of the adaptive reduction, if the reception image size is a little bigger than recording paper, the size is automatically reduced so that it becomes within the recording paper size and is recorded.

Fixed reduction	No
Page separation record	Does not overlap at the division.
Equal size recording	Records the received image at an equal size. When the reception size is larger than A3 form, excessive image is destructed.
Cassette selection	Appropriate paper size auto selection • When paper is running out, paper is provided from another cassette with the same size of paper. • Tray-fix mode available
2-in-1 reception	No

14.2.6 Memory function

Display of used memory space	Yes (Fax screen: RDH memory)
Memory RX	A password is required for printing received files. The password (up to 8 digits) is set when the memory RX mode is set in the utility mode. First page can be printed.
Memory substitute reception	Yes (when there is no paper / no toner)

14.2.7 Various communication function

Short protocol	No
ECM	Yes • Frame size: 64 byte / 256 byte
Communication timer	Yes • 24 hours maximum. 21 including one for sequential polling timer.
Redial waiting	Five redial timers maximum
Error page resending	No (becomes the error page redial.)
Error page redial	Effective to both quick memory transmission and memory transmission. Redial and retransmission in case of RTN or comm error. • Redial interval: follows the busy redial interval. • Num. of redials: 0 to 7 times (different counter from the busy redial)
Total page number print	Yes • Automatic print to the TTI in memory transmission. • Added when the number of document pages is appointed for quick memory transmission.
Header memo	No
TTI (Transmitting terminal ID)	Yes • 30 characters maximum • Added not to the original read image, but to the top of the transmission image while in the image rotation being specified. • The registration of up to 20 sender names is available. • It is possible to make a selection to decide whether or not the address is printed at the header position.
RTI (Receiving terminal ID)	Yes • After processing the enlargement and/or reduction operations, a record is made at the bottom position specified before conducting an image rotation. • Date, time and page no. are recorded.
Fax remote diagnosis	Yes
MH fix	Yes. Setting can be made from the service mode.
Document insertion after dialing	Yes • Document insertion is possible after dialing. Starts calling by using the [Start] button.
Communication history	Yes • The last 700 communication histories are recorded in the communication journal.
Electronic key counter	Yes • The number of transmitted pages to each user. Limit control is not done.
Key counter	Yes
Coin vendor	Yes. (Support timing varies depending on models.) • It is possible to use with FAX.

14.2.8 User lists / reports

Activity report	The total of 700 communications (sending and reception) can be recorded. • Automatic output: Daily / Every 100 Comm. / 100/ Daily • Manual output: Yes
Timer reservation TX report	Automatic output Users can turn ON/OFF.
TX result report	• Automatic output (ON / If TX Fails / OFF) • Possible to output with images
Sync transmit reservation report	Automatic output: Users can turn ON / OFF.
Broadcast result report	Automatic output: Users can select All Destination, 1 Destination at a time.
Polled Tx reserve report	Automatic output: Users can turn ON / OFF.
Polled Tx result report	

Polled Rx result report	
Sequential poll, Rx reservation report	
Sequential poll, Rx result report	
An address polling Rx reserved report	
Relay TX result report	
Relay request report	
PC-Fax TX error report	
Address book list	Manual output (numeric order: output to be produced for each destination type)
Program list	Manual output
Group address list	
Fax setting list	
Bulletin TX report	Automatic output: Users can turn ON / OFF.
Confidential RX report	• Auto output at the F code confidential reception. • Automatic output: Users can turn ON / OFF.
Subject/Text list	Manual output

14.2.9 Other user functions

Fax ID	Number ID: 20 digits (max.)
Header note	No
Language selection	Yes

14.3 Network fax specifications

14.3.1 Internet fax

- Main product specifications relating to internet fax functions are indicated below.
- Specifications are subject to change without notice.

Image memory capacity	128 GB* (128 GB of 250 GB of the hard disk is used as a memory.)	
Max. no. of stored pages	Approx. 10000 pages* (numbers of pages in the case of storing standard A4-size pages containing approximately 700 characters at “fine” resolution)	
Scanning line density	Ultra fine	600 dpi x 600 dpi
	Super fine	400 dpi x 400 dpi
	Fine	200 dpi x 200 dpi
	Normal	200 dpi x 100 dpi
Transmission mode (File type)	monochrome (TIFF-FX)	
Transmission coding methods	• TIFF-S (MH) • TIFF-F (MR/MMR)	
Max. scanning size	• 420 mm x 297 mm (A3 size) • Width: 297 mm • Length: 1000 mm at the maximum	
Max. recording size	• 420 mm x 297 mm (A3 size) • Length: 1000 mm at the maximum • When receiving the data of an original that is longer than the paper sizes set in the paper trays, the data is printed according to the setting of [Print Separate Fax Pages].	
Treatment of transmission error	Mail transmitted again.	None
	Internet fax Rx error report	When documents cannot be sent to the SMTP server, transmission error report to be printed/not printed can be set.
		When MDN/DSN response is received, to be printed/not to be printed can be set.
		When MDN/DSN response is received, transmission result is indicated on the transmission control report.
		MDN/DSN response monitoring time can be set in the range from 0 to 99 hours.
Mail reception	Mail acquisition interval	Can be set to 1 to 60 minutes.
	Manual POP reception	Possible
	Reception by specifying a box	Not Available (except Memory RX)
	Received document size	width: A4 / B4 / A3
	Reception coding system	TIFF-S (MH), TIFF-F (MR/MMR)
List/report	Print DSN message	Output can be produced
	Print MDN message	Output can be produced
	Print receipt mail text	Output can be produced
	Network fax relay result report	Output can be produced

	Network fax activity report	• During automatic output: Shared with Fax Activity Report. Max. 100. • During manual output: Shared with Fax Activity Report. Max. 700.
	Network fax Rx error report	Output can be produced

14.3.2 IP address fax

- Main product specifications relating to IP Address Fax functions are indicated below.
- Specifications are subject to change without notice.

Image memory capacity	128 GB* (128 GB of 250 GB of the hard disk is used as a memory.)	
Max. no. of stored pages	Approx. 10000 pages* (numbers of pages in the case of storing standard A4-size pages containing approximately 700 characters at “fine” resolution)	
Scanning line density	Ultra fine	600 dpi x 600 dpi
	Super fine	400 dpi x 400 dpi
	Fine	200 dpi x 200 dpi 300 dpi x 300 dpi (Color: Compact PDF only)
	Normal (Monochrome only)	200 dpi x 100 dpi
Transmission mode (File type)	• Color (PDF, Compact PDF, TIFF-C) / Monochrome (TIFF) • Capable of transmitting TIFF-C (JPEG); • Incapable of receiving TIFF-C (JPEG) (any receiving TIFF-C jobs are discarded)	
Coding methods	• MH (applicable only to monochrome format) • MR (applicable only to monochrome format) • MMR (applicable only to monochrome format)	
Max. scanning size	• A3 (420 mm x 297 mm) • Width: 297 mm • Length: Max. 1000 mm.	
Max. recording size	• A3 (420 mm x 297 mm) • 1000 mm in the maximum recording size • Originals in excess of 1000 mm cannot be received. • In the color mode, the reception of an original in excess of 432 mm in length is unavailable. • When receiving originals longer than the paper size in the paper trays, printing is made according to the setting of [Print Separate Fax Pages].	
Treatment of transmission error	Retry	Error codes subject to retry: • N10 • N12 N15 to 17 only
	TX error report	• TX error report printing ON/OFF can be set. • A TX error report is printed when a TX error occurs and the TX error is recorded in the activity.
Reception	Received document size	Max. document width to be received: A3
	Reception coding system	• TIFF-S (MH) • TIFF-F (MR/MMR) • PDF • Compact PDF • TIFF-C
	Received file size	• Unlimited (depends on the space available for use in the HDD) • The file is not received, if the space available for use in the HDD is 107 MB or less. • If the space available for use in the HDD runs out during reception, the session is abnormally terminated and the received file is deleted.
Report	Print receipt mail text	Possible

- *: The Internal hard disk is common used of each function of the Copy, the Scan, the Print and the Box.

D OVERALL COMPOSITION

1. SYSTEM CONFIGURATION

1.1 System front view

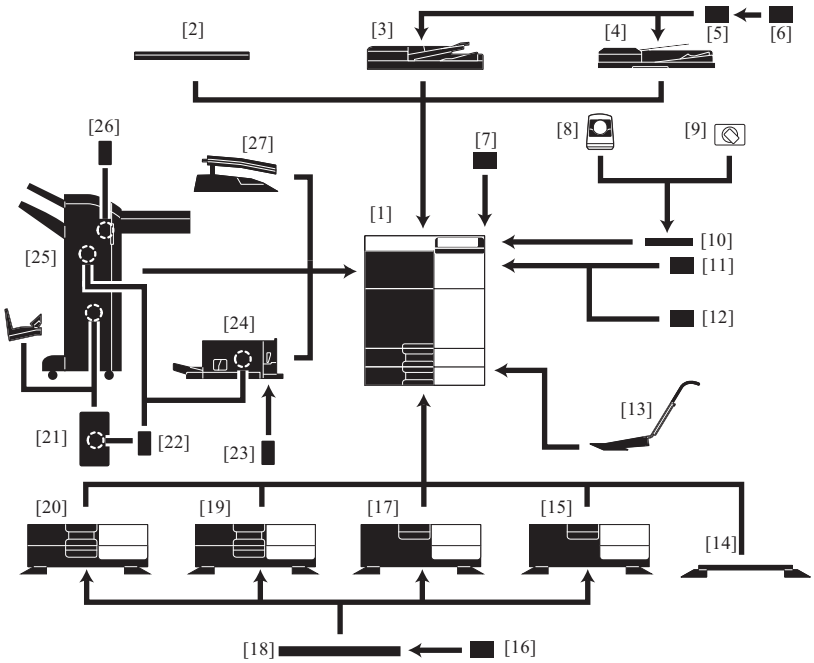

[1]	bizhub 364e/284e/224e	[2]	Original Cover OC-511
[3]	Reverse Automatic Document Feeder DF-624	[4]	Dual Scan Document Feeder DF-701
[5]	Stamp Unit SP-501	[6]	Spare TX Marker Stamp 2
[7]	Keypad KP-101	[8]	Authentication Unit AU-102
[9]	Authentication Unit AU-201	[10]	Working Table WT-506
[11]	Local Interface Kit EK-606	[12]	Local Interface Kit EK-607
[13]	Mount Kit MK-730	[14]	Desk DK-705 *1
[15]	Desk DK-510 *1	[16]	Power Supply BOX MK-734
[17]	Paper Feed Cabinet PC-410	[18]	Heater HT-509
[19]	Paper Feed Cabinet PC-210	[20]	Paper Feed Cabinet PC-110
[21]	Saddle Stitcher SD-511	[22]	Staple Kit SK-602
[23]	Punch Kit PK-519	[24]	Finisher FS-533
[25]	Finisher FS-534	[26]	Punch Kit PK-520
[27]	Job Separator JS-506	-	Assist Handle AH-101 *2
-	Keyboard Holder KH-102 *2	-	-

*1: Except for Europe area.
*2: This option is not shown in the figure above.

NOTE

- **Use the desk or the paper feed cabinet without fail when installing on the floor in order to keep the function and quality of the unit.**

1.2 System rear view

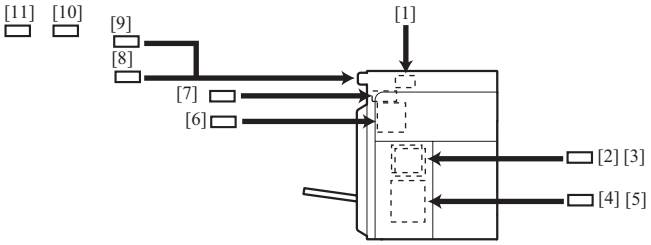

[1]	Upgrade Kit UK-208	[2]	Security Kit SC-508
[3]	Upgrade Kit UK-209	[4]	Fax Mount Kit MK-728
[5]	Fax Kit FK-508	[6]	Fax Kit FK-511
[7]	Mount Kit MK-735	[8]	Key Counter Mount Kit 1

[9]	Key Counter Mount Kit CF *1	[10]	Upgrade Kit UK-204
[11]	i-Option LK-101 v3/102 v3/104 v3/105 v3/106/107/108/110/111	-	-

*1 Europe area only

2. SECTION CONFIGURATION

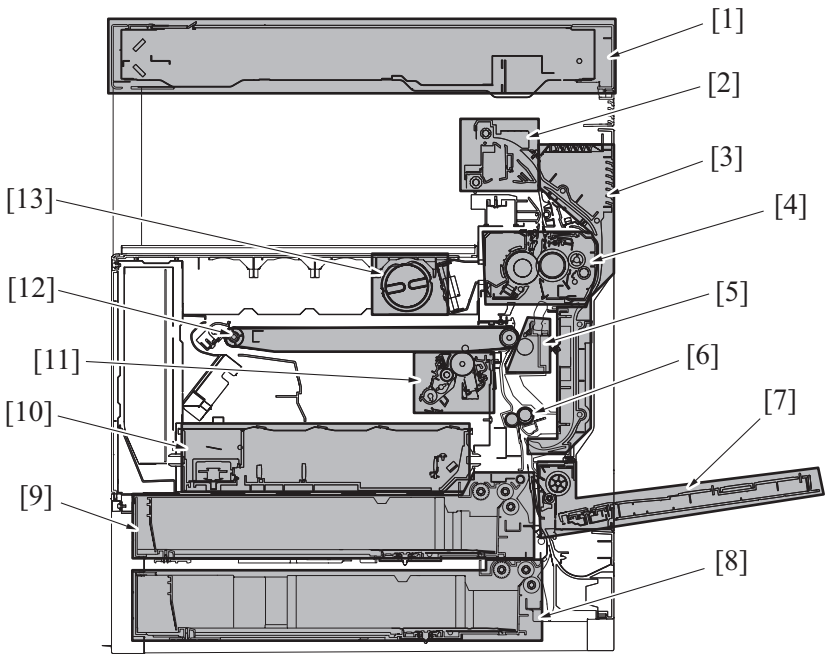

[1]	Scanner section	[2]	Paper exit/reverse section
[3]	Duplex section	[4]	Fusing section
[5]	2nd transfer section	[6]	Registration section
[7]	Paper feed section (Manual bypass tray)	[8]	Paper feed section (Tray 2)
[9]	Paper feed section (Tray 1)	[10]	Write section (PH section)
[11]	Developing section	[12]	Transfer section
[13]	Toner supply section	-	-

3. PAPER PATH

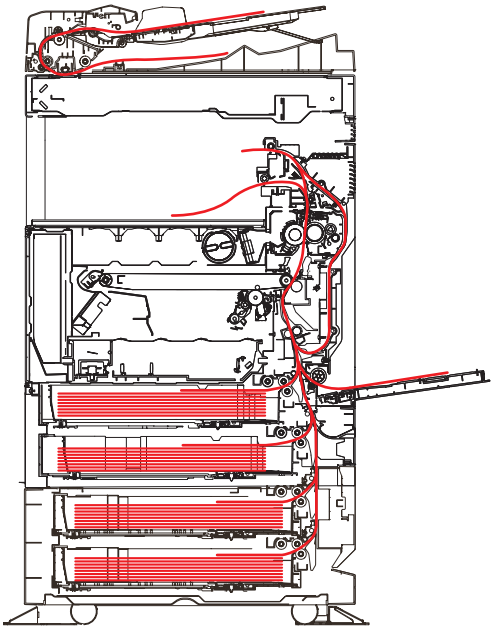

4. CONTROL BLOCK DIAGRAM

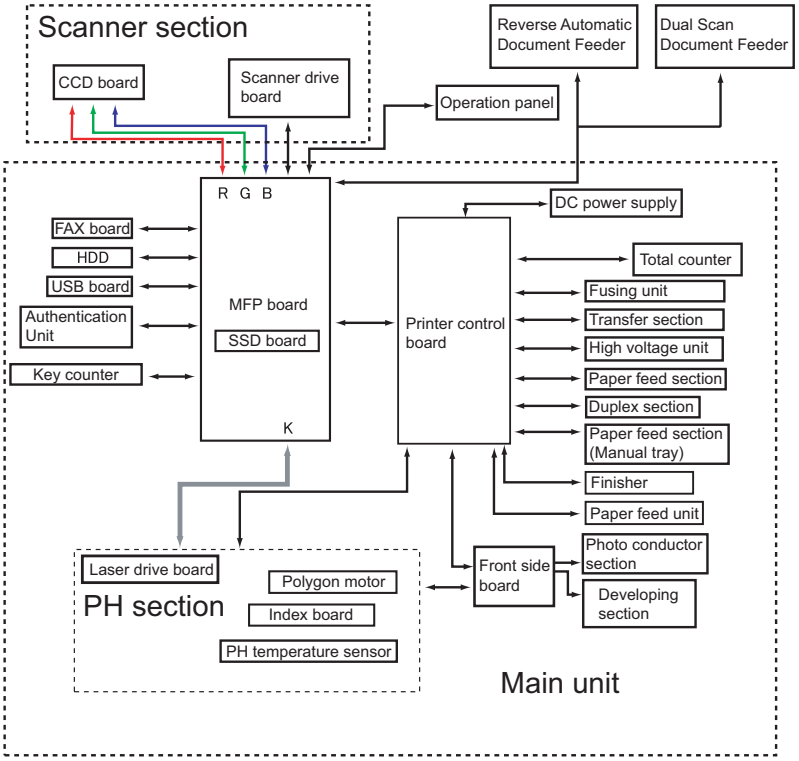

5. IMAGE CREATION PROCESS

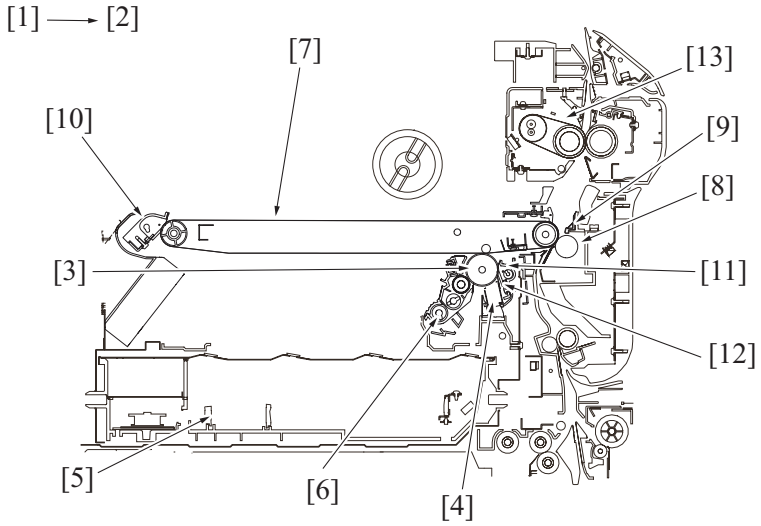

[1]	Photoelectric conversion	The light reflected off the surface of the original is separated into different colors using the color filters (R, G, and B); CCD then converts it into a corresponding electric signal and outputs the signal to the IR imaging processing section.
[2]	Printer image processing	The electric signal is converted to digital image signals. After going through some corrections, video signals are output to the printer image processing section. D/A conversion will be performed after the VIDEO signals are corrected. This data will control the emission of the laser diode.
[3]	Photo conductor	The image of the original projected onto the surface of the photo conductor is changed to a corresponding electrostatic latent image.
[4]	Photo conductor charging	Supply DC (-) charge on the photo conductor.
[5]	Laser exposure	Expose photo conductor to a laser beam to develop electrostatic latent image.
[6]	Developing	The toner, agitated and negatively charged in the developer mixing chamber, is attracted onto the electrostatic latent image formed on the surface of the photo conductor. It is thereby changed to a visible, developed image. AC and DC negative bias voltages are applied to the developing roller, thereby preventing toner from sticking to the background image portion.
[7]	1st image transfer	A DC positive voltage is applied to the backside of the transfer belt, thereby allowing the visible, developed image on the surface of the photo conductors to be transferred onto the transfer belt.
[8]	2nd image transfer	A DC positive voltage is applied to the backside of the paper, thereby allowing the visible, developed image on the surface of the transfer belt to be transferred onto the paper.
[9]	Paper separation	The paper, which has undergone the 2nd image transfer process, is neutralized so that it can be properly separated from the transfer belt by the paper separator claws.
[10]	Transfer belt cleaning	Residual toner on the surface of the transfer belt is collected for cleaning by cleaning blade.
[11]	Main erase	The surface of the photo conductor is irradiated with light, which neutralizes any surface potential remaining on the surface of the photo conductor.
[12]	Photo conductor cleaning	The residual toner left on the surface of the photo conductor is scraped off.
[13]	Fusing	The visible toner image transferred onto the surface of the paper is melted by the heat of the fusing roller and fixed to the paper by pressure.

6. IMAGE FORMING CONTROL

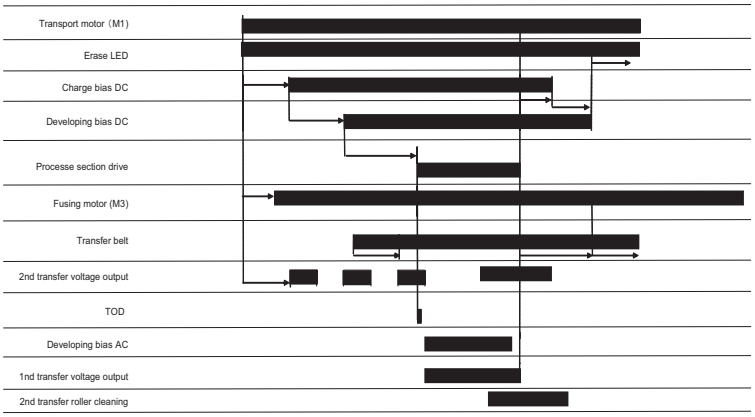

7 PROCESS SPEED

Paper Type/Mode	bizhub 364e	bizhub 284e	bizhub 224e
• Plain paper • Thin paper	166.4 mm/s	136.2 mm/s	136.2 mm/s
• Thick paper 1 • Thick paper 1+	83.2 mm/s	68.1 mm/s	68.1 mm/s
• Thick paper 2 • Thick paper 3 • Thick paper 4 • Envelope • Postcard	83.2 mm/s	68.1 mm/s	68.1 mm/s
• OHP film	166.4 mm/s	136.2 mm/s	136.2 mm/s
• Gloss mode	83.2 mm/s	68.1 mm/s	68.1 mm/s

E SERVICE TOOL

1. bizhub C364e/C284e/C224e

1.1 Service material list

Name	Shape	Material No.	Remarks
Cleaning pad	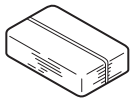	000V-18-1	10pcs/1pack
Isopropyl alcohol	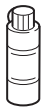	-	
Hydro-wipe		65AA-9920	10pcs/1 pack

1.2 CE tool list

Tool name	Shape	Quantity	Parts No.	Remarks
Color chart		1	9J06 PJP1 ##	A3
			9J06 PJP2 ##	11 x 17
Monochrome chart		1	4040 PJP1 ##	A3
			4040 PJP2 ##	11 x 17

1.3 Utility tool

1.3.1 IC card information setting tool of AU-201/AU-202H/SCL-010/YSoft card reader

(1) Outline

- Before connecting the AU-201/AU-202H/SCL-010 card reader to the MFP, it is necessary to prepare an IC card information setting file with the loadable driver. To prepare this file, a tool is used for preparing the IC card information setting file for use in each card reader.

(2) IC card information setting file preparation tool

(a) Tool names

Tools for CE

- For AU-201: Auth Device Tool Advanced for AU-201
- For SCL-010: Auth Device Tool Advanced for SCL-010
- For AU-202H: Auth Device Tool Advanced for AU-202H
- For the YSoft card reader: Auth Device Tool Advanced for YSoft CRv2

(b) System requirement of tools for CE

OS	• Windows XP Professional • Windows Vista • Windows 7 • Windows 8 * Support both 32-bit (x86) and 64-bit (x64) editions
Library (Any of these needs to be installed)	• Microsoft .Net Framework2.0 SP2 • Microsoft .Net Framework3.0 SP2 • Microsoft .Net Framework3.5 SP1 • Microsoft .Net Framework3.5.1
HDD	3 MB or more free space is required
Display	800 x 600 pixels,16 bit full color

(3) IC card information setting procedures

(a) Preparations for the following (c), (e), (g) or (i) procedures

- Using the PageScope Data Administrator, register the target MFP in advance.
- Set the MFP into a state in which it can communicate over the network.
- Accessing PageScope Web Connection -> [Administrator mode] -> [Security Settings], issue a self-signed certificate from [Device Certificate Setting] and install it.
- Accessing PageScope Web Connection -> [Administrator mode] -> [Network Settings], set use of [SSL/TLS] in [OpenAPI] to “SSL Only”.

NOTE

- **Only one loadable device driver must be stored in the USB memory, and please do not save any other data in the USB memory**

(b) Auth Device Tool Advanced for AU-201 (Setting IC card information in the loadable driver in advance)

1. Obtain the loadable driver (ICC_LDR.tar) for use in AU-201 that is compatible with the type of card used.
2. Start the Auth Device Tool Advanced for AU-201.
3. Select [Import Loadable Driver] from [File] and select the loadable driver.
4. Select card type.
5. If the card is good for detailed settings, click [Detail Setting/Extra Data Setting].
6. Input the necessary extended data. (For details, ask the IC card administrator.)
7. Select Loadable Driver in [Export Format] and click [Export].
8. Select the loadable driver to be updated and the output location of the loadable driver and click [OK].
9. Copy the output loadable driver (ICC_LDR.tar) to the root directory of the USB memory.
   NOTE
   - **Please do not save any other data in the USB memory.**
10. Call the Service Mode to the screen of the MFP.
11. Select [System 2] -> [Driver Install] -> [Install].
12. Connect the USB memory in which the loadable driver has been saved to the USB port on the side of the control panel.
13. Select [Loadable driver] and touch the [Start] to install the loadable driver.
14. Remove the USB memory and, accessing [Billing Settings] -> [Management Function Choice] -> [Authentication Device 2], select [Card].
15. Turn OFF the main power switch and turn it ON again more than 10 seconds after.
16. Set the authentication user.

(c) Auth Device Tool Advanced for AU-201 (Installing IC card information setting only in the MFP afterward)

1. Install the loadable driver to the MFP.
2. Start the Auth Device Tool Advanced for AU-201.
3. Select card type.
4. If the card is good for detailed settings, click [Detail Setting/Extra Data Setting].
5. Input the necessary extended data. (For details, ask the IC card administrator.)
6. Select IC card information setting file in [Export Format] and click [Export].
7. Set the encrypted password.
8. Save the file (iccConfig.bin).
9. Start the PageScope Data Administrator, and select the target MFP.
10. In the [Settings for multiple device] tab, click [Batch setting of IC Card Information].
11. Using [Browse], select the file saved in step 8.
12. Click [Open] and type the encrypted password set in step 7.
13. Click [Next] and select the device to be imported.
14. Click [Start] and write the file in the MFP.
15. Check that “Normal” is shown in [Status].
16. Turn OFF the main power switch and turn it ON again more than 10 seconds after.
17. Set the authentication user.

(d) Auth Device Tool Advanced for SCL-010 (Setting IC card information in the loadable driver in advance)

1. Obtain the loadable driver (ICC_LDR.tar) for use in SCL-010 that is compatible with the type of card used.
2. Start the Auth Device Tool Advanced for SCL-010.
3. Select card type.
4. Select Loadable Driver in [Export Format] and click [Export].
5. Select the loadable driver to be updated and the output location of the loadable driver and click [OK].
6. Copy the output loadable driver (ICC_LDR.tar) to the root directory of the USB memory.
   NOTE
   - **Please do not save any other data in the USB memory.**
7. Call the Service Mode to the screen of the MFP.
8. Select [System 2] -> [Driver Install] -> [Install].
9. Connect the USB memory in which the loadable driver has been saved to the USB port on the side of the control panel.
10. Select [Loadable driver] and touch the [Start] to install the loadable driver.
11. Remove the USB memory and, accessing [Billing Settings] -> [Management Function Choice] -> [Authentication Device 2], select [Card].
12. Turn OFF the main power switch and turn it ON again more than 10 seconds after.
13. Set the authentication user.

(e) Auth Device Tool Advanced for SCL-010 (Installing IC card information setting only in the MFP afterward)

1. Install the loadable driver for SCL-010 to the MFP.
2. Start the Auth Device Tool Advanced for SCL-010.

3. Select card type.
4. Select IC card information setting file in [Export Format] and click [Export].
5. Set the encrypted password.
6. Save the file (iccConfig.bin).
7. Start the PageScope Data Administrator, and select the target MFP.
8. In the [Settings for multiple device] tab, click [Batch setting of IC Card Information].
9. Using [Browse], select the file saved in step 6.
10. Click [Open] and type the encrypted password set in step 5.
11. Click [Next] and select the device to be imported.
12. Click [Start] and write the file in the MFP.
13. Check that “Normal” is shown in [Status].
14. Turn OFF the main power switch and turn it ON again more than 10 seconds after.
15. Set the authentication user.

(f) Auth Device Tool Advanced for AU-202H (Setting IC card information in the loadable driver in advance)

1. Obtain the loadable driver (ICC_LDR.tar) for use in AU-202H that is compatible with the type of card used
2. Start the Auth Device Tool Advanced for AU-202H.
3. Set the card ID length.
4. Select Loadable Driver in [Export Format] and click [Export].
5. Select the loadable driver to be updated and the output location of the loadable driver and click [OK].
6. Copy the output loadable driver (ICC_LDR.tar) to the root directory of the USB memory.
   NOTE
   - **Please do not save any other data in the USB memory.**
7. Call the Service Mode to the screen of the MFP.
8. Select [System 2] -> [Driver Install] -> [Install].
9. Connect the USB memory in which the loadable driver has been saved to the USB port on the side of the control panel.
10. Select [Loadable driver] and touch the [Start] to install the loadable driver.
11. Remove the USB memory and, accessing [Billing Settings] -> [Management Function Choice] -> [Authentication Device 2], select [Card].
12. Turn OFF the main power switch and turn it ON again more than 10 seconds after.
13. Set the authentication user.

(g) Auth Device Tool Advanced for AU-202H (Installing IC card information setting only in the MFP afterward)

1. Install the loadable driver for AU-202H to the MFP.
2. Start the Auth Device Tool Advanced for AU-202H.
3. Set the card ID length.
4. Select IC card information setting file in [Export Format] and click [Export].
5. Set the encrypted password.
6. Save the file (iccConfig.bin).
7. Start the PageScope Data Administrator, and select the target MFP.
8. In the [Settings for multiple device] tab, click [Batch setting of IC Card Information].
9. Using [Browse], select the file saved in step 6.
10. Click [Open] and type the encrypted password set in step 5.
11. Click [Next] and select the device to be imported.
12. Click [Start] and write the file in the MFP.
13. Check that “Normal” is shown in [Status].
14. Turn OFF the main power switch and turn it ON again more than 10 seconds after.
15. Set the authentication user.

(h) Auth Device Tool Advanced for YSoft CRv2 (Setting IC card information in the loadable driver in advance)

NOTE

- **If a YSoft card reader is used, when performing authentication, the default setting for the loadable driver makes the card to be informed as an HID Prox card regardless of which type you are using.**
  To change the card type when performing authentication, using Auth Device Tool Advanced for YSoft CRv2 to choose a corresponding card type to be reported to the authentication program from the following list.

Card Reader Name	Readable Card Type	IC Card Information Setting (card type to be reported)
KM USB Reader v2 MultiReader HF	Mifare	TypeA (1) *1
KM USB Reader v2 Legic Advant	LEGIC	TypeA (1) *1
KM USB Reader v2 ASK FSK 125kHz	EM4100, EM4102, RFID 125kHz	EM4100/ EM4102/ RFID 125kHz
KM USB Reader v2 Mot/Ind W26	Indala	Indala
KM USB Reader v2 HID Prox	HID Prox	HID Prox (1) *2
KM USB Reader v2 HID iCLASS	HID iCLASS	HID iCLASS (1) *3

- ***1 The content (ID) to be read from the type A card setting differs from which to be read by using AU-201.**
- ***2 The content (ID) to be read from the HID Prox card setting differs from which to be read by using AU-201H.**
- ***3 The content (ID) to be read from the HID iCLASS card setting differs from which to be read by using AU-202H.**

1. Obtaion the loadable driver (ICC_LDR.tar) for the YSoft card reader.
2. Start the Auth Device Tool Advanced for YSoft CRv2.
3. Select card type.
4. Select Loadable Driver in [Export Format] and click [Export].

5. Select the loadable driver to be updated and the output location of the loadable driver and click [OK].
6. Copy the output loadable driver (ICC_LDR.tar) to the root directory of the USB memory.
   NOTE
   - **Please do not save any other data in the USB memory.**
7. Call the Service Mode to the screen of the MFP.
8. Select [System 2] -> [Driver Install] -> [Install].
9. Connect the USB memory in which the loadable driver has been saved to the USB port on the side of the control panel.
10. Select [Loadable driver] and touch the [Start] to install the loadable driver.
11. Remove the USB memory and, accessing [Billing Settings] -> [Management Function Choice] -> [Authentication Device 2], select [Card].
12. Turn OFF the main power switch and turn it ON again more than 10 seconds after.
13. Set the authentication user.

(i) Auth Device Tool Advanced for YSoft CRv2 (Installing IC card information setting only in the MFP afterward)

NOTE

- **If a YSoft card reader is used, when performing authentication, the default setting for the loadable driver makes the card to be informed as an HID Prox card regardless of which type you are using.**
  To change the card type when performing authentication, using Auth Device Tool Advanced for YSoft CRv2 to choose a corresponding card type to be reported to the authentication program from the following list.

Card Reader Name	Readable Card Type	IC Card Information Setting (card type to be reported)
KM USB Reader v2 MultiReader HF	Mifare	TypeA (1) *1
KM USB Reader v2 Legic Advant	LEGIC	TypeA (1) *1
KM USB Reader v2 ASK FSK 125kHz	EM4100, EM4102, RFID 125kHz	EM4100/ EM4102/ RFID 125kHz
KM USB Reader v2 Mot/Ind W26	Indala	Indala
KM USB Reader v2 HID Prox	HID Prox	HID Prox (1) *2
KM USB Reader v2 HID iCLASS	HID iCLASS	HID iCLASS (1) *3

- ***1 The content (ID) to be read from the type A card setting differs from which to be read by using AU-201.**
- ***2 The content (ID) to be read from the HID Prox card setting differs from which to be read by using AU-201H.**
- ***3 The content (ID) to be read from the HID iCLASS card setting differs from which to be read by using AU-202H.**

1. Install the loadable driver for the YSoft card reader to the MFP.
2. Start the Auth Device Tool Advanced for YSoft CRv2.
3. Select card type.
4. Select IC card information setting file in [Export Format] and click [Export].
5. Set the encrypted password.
6. Save the file (iccConfig.bin).
7. Start the PageScope Data Administrator, and select the target MFP.
8. In the [Settings for multiple device] tab, click [Batch setting of IC Card Information].
9. Using [Browse], select the file saved in step 6.
10. Click [Open] and type the encrypted password set in step 5.
11. Click [Next] and select the device to be imported.
12. Click [Start] and write the file in the MFP.
13. Check that “Normal” is shown in [Status].
14. Turn OFF the main power switch and turn it ON again more than 10 seconds after.
15. Set the authentication user.

2. DF-701/DF-624

2.1 CE tool list

Tool name	Shape	Quantity	Parts No.	Remarks
DF reading chart	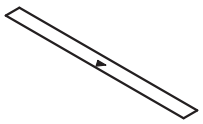	1	9J06 PJG1 ##	

F PERIODICAL MAINTENANCE

1. Concept of periodical maintenance

- Cleaning/replacement cycle for each maintenance item of main body/options can be evaluated with the total counter or each life counter value of [Service Mode] -> [Counter] -> [Life].

2. Periodical maintenance items

2.1 bizhub 364e/284e/224e

2.1.1 bizhub 364e

(1) Periodical maintenance 1 (Total counter; every 60,000 counts)

No.	Section	Description/part name	Qt.	Clean	Check	Replace	Descriptions
1	Overall	Paper feed and image conditions	-		●		
2		Appearance	-	●	●		
3	Conveyance section	Registration roller	-	●			
4	Image transfer section	Around waste toner port	-	●			
5	Duplex section	Duplex transport roller	-	●			

(2) Periodical maintenance 2 (Field standard yield; every 120,000 sheets)

No.	Section	Description/part name	Qt.	Clean	Check	Replace	Descriptions
1	Processing section	Drum unit	1			●	

(3) Periodical maintenance 3 (Life counter; every 200,000 counts)

No.	Section	Description/part name	Qt.	Clean	Check	Replace	Descriptions
1	Paper feed section	Manual bypass tray feed roller	1			●	
2		Manual bypass tray separation roller assy	1			●	

(4) Periodical maintenance 4 (Life counter; every 300,000 counts)

No.	Section	Description/part name	Qt.	Clean	Check	Replace	Descriptions
1	Paper feed section	Tray 1 pick-up roller	1			●	
2		Tray 1 feed roller	1			●	
3		Tray 1 separation roller assy	1			●	
4		Tray 2 pick-up roller	1			●	
5		Tray 2 feed roller	1			●	
6		Tray 2 separation roller assy	1			●	

(5) Periodical maintenance 5 (Field standard yield; every 300,000 sheets)

No.	Section	Description/part name	Qt.	Clean	Check	Replace	Descriptions
1	Processing section	Ozone filter	1			●	*1
2	Image transfer section	Transfer belt unit	1			●	
3		Transfer roller unit	1			●	*1

*1: Replace it when replacing transfer belt unit.

(6) Periodical maintenance 6 (Field standard yield; every 590,000 sheets (US)/600,000 sheets (EU))

No.	Section	Description/part name	Qt.	Clean	Check	Replace	Descriptions
1	Processing section	Developing unit	1			●	
2	Fusing section	Fusing unit	1			●	

2.1.2 bizhub 284e

(1) Periodical maintenance 1 (Total counter; every 60,000 counts)

No.	Section	Description/part name	Qt.	Clean	Check	Replace	Descriptions
1	Overall	Paper feed and image conditions	-		●		
2		Appearance	-	●	●		
3	Conveyance section	Registration roller	-	●			
4	Image transfer section	Around waste toner port	-	●			
5	Duplex section	Duplex transport roller	-	●			

(2) Periodical maintenance 2 (Field standard yield; every 120,000 sheets)

No.	Section	Description/part name	Qt.	Clean	Check	Replace	Descriptions
1	Processing section	Drum unit	1			●	

(3) Periodical maintenance 3 (Life counter; every 200,000 counts)

No.	Section	Description/part name	Qt.	Clean	Check	Replace	Descriptions
1	Paper feed section	Manual bypass tray feed roller	1			●	

No.	Section	Description/part name	Qt.	Clean	Check	Replace	Descriptions
2		Manual bypass tray separation roller assy	1			●	

(4) Periodical maintenance 4 (Life counter; every 300,000 counts)

No.	Section	Description/part name	Qt.	Clean	Check	Replace	Descriptions
1	Paper feed section	Tray 1 pick-up roller	1			●	
2		Tray 1 feed roller	1			●	
3		Tray 1 separation roller assy	1			●	
4		Tray 2 pick-up roller	1			●	
5		Tray 2 feed roller	1			●	
6		Tray 2 separation roller assy	1			●	

(5) Periodical maintenance 5 (Field standard yield; every 280,000 sheets)

No.	Section	Description/part name	Qt.	Clean	Check	Replace	Descriptions
1	Processing section	Ozone filter	1			●	*1
2	Image transfer section	Transfer belt unit	1			●	
3		Transfer roller unit	1			●	*1

*1: Replace it when replacing transfer belt unit.

(6) Periodical maintenance 6 (Field standard yield; every 590,000 sheets (US)/600,000 sheets (EU))

No.	Section	Description/part name	Qt.	Clean	Check	Replace	Descriptions
1	Processing section	Developing unit	1			●	
2	Fusing section	Fusing unit	1			●	

2.1.3 bizhub 224e

(1) Periodical maintenance 1 (Total counter; every 60,000 counts)

No.	Section	Description/part name	Qt.	Clean	Check	Replace	Descriptions
1	Overall	Paper feed and image conditions	-		●		
2		Appearance	-	●	●		
3	Conveyance section	Registration roller	-	●			
4	Image transfer section	Around waste toner port	-	●			
5	Duplex section	Duplex transport roller	-	●			

(2) Periodical maintenance 2 (Field standard yield; every 70,000 sheets)

No.	Section	Description/part name	Qt.	Clean	Check	Replace	Descriptions
1	Processing section	Drum unit	1			●	

(3) Periodical maintenance 3 (Life counter; every 200,000 counts)

No.	Section	Description/part name	Qt.	Clean	Check	Replace	Descriptions
1	Paper feed section	Manual bypass tray feed roller	1			●	
2		Manual bypass tray separation roller assy	1			●	

(4) Periodical maintenance 4 (Life counter; every 300,000 counts)

No.	Section	Description/part name	Qt.	Clean	Check	Replace	Descriptions
1	Paper feed section	Tray 1 pick-up roller	1			●	
2		Tray 1 feed roller	1			●	
3		Tray 1 separation roller assy	1			●	
4		Tray 2 pick-up roller	1			●	
5		Tray 2 feed roller	1			●	
6		Tray 2 separation roller assy	1			●	

(5) Periodical maintenance 5 (Field standard yield; every 225,000 sheets)

No.	Section	Description/part name	Qt.	Clean	Check	Replace	Descriptions
1	Processing section	Ozone filter	1			●	*1
2	Image transfer section	Transfer belt unit	1			●	
3		Transfer roller unit	1			●	*1

*1: Replace it when replacing transfer belt unit.

(6) Periodical maintenance 6 (Field standard yield; every 590,000 sheets (US)/600,000 sheets (EU))

No.	Section	Description/part name	Qt.	Clean	Check	Replace	Descriptions
1	Processing section	Developing unit	1			●	
2	Fusing section	Fusing unit	1			●	

2.2 Option

2.2.1 DF-701

(1) Periodical maintenance 1 (total counter; every 50,000 counts)

No.	Section	Description/part name	Qt.	Clean	Check	Lubrication	Replace	Descriptions
1	Overall	Paper feed and image conditions	-		●			
2		Appearance	-	●	●			
3	Paper feed section	Pick-up roller	-	●				
4		Feed roller	-	●				
5		Separation roller	-	●				
6	Conveyance section	Roller and rolls	-	●				
7	Scanning section	Front side scanning guide	-	●				
8	Paper feed section	Reflective sensor section	-	●				

(2) Periodical maintenance 2 (life counter; every 200,000 counts)

No.	Section	Description/part name	Qt.	Clean	Check	Lubrication	Replace	Descriptions
1	Paper feed section	Pick-up roller	2				●	
2		Feed roller	1				●	*1
3		Separation roller assy	1				●	

- *1: Replace those three parts at the same time.

2.2.2 DF-624

(1) Periodical maintenance 1 (total counter; every 50,000 counts)

No.	Section	Description/part name	Qt.	Clean	Check	Lubrication	Replace	Descriptions
1	Overall	Paper feed and image conditions	-		●			
2		Appearance	-	●	●			
3	Paper feed section	Pick-up roller	-	●				
4		Feed roller	-	●				
5		Separation roller	-	●				
6	Conveyance section	Roller and rolls	-	●				
7	Scanning section	Scanning guide	-	●				
8	Paper feed section	Reflective sensor section	-	●				

(2) Periodical maintenance 2 (life counter; every 200,000 counts)

No.	Section	Description/part name	Qt.	Clean	Check	Lubrication	Replace	Descriptions
1	Paper feed section	Pick-up roller	2				●	
2		Feed roller	1				●	*1
3		Separation roller assy	1				●	

- *1: Replace those three parts at the same time.

2.2.3 PC-110/PC-410

(1) Periodical maintenance 1 (life counter; every 300,000 counts)

No.	Section	Description/part name	Qt.	Clean	Check	Lubrication	Replace	Descriptions
1	Overall	Paper feed and image conditions	-		●			
2		Appearance	-	●	●			
3	Paper feed section	Pick-up roller	1				●	
4		Feed roller	1				●	*1
5		Separation roller	1				●	

- *1: Replace those three parts at the same time.

2.2.4 PC-210

(1) Periodical maintenance 1 (life counter; every 300,000 counts)

No.	Section	Description/part name	Qt.	Clean	Check	Lubrication	Replace	Descriptions
1	Overall	Paper feed and image conditions	-		●			
2		Appearance	-	●	●			
3	Paper feed section	Pick-up roller	2				●	*1
4		Feed roller	2				●	
5		Separation roller	2				●	

- *1: Replace those three parts at the same time.

2.2.5 FS-534

(1) Periodical maintenance 1 (total counter; every 300,000 counts)

No.	Section	Description/part name	Qt.	Clean	Check	Lubrication	Replace	Descriptions
1	Overall	Paper feed and image conditions	-		●			
2		Appearance	-	●	●			
3	Conveyance section	Roller and rolls	-	●				
4		Paddle	9	●				

(2) Periodical maintenance 2 (life counter; every 2,000,000 counts)

No.	Section	Description/part name	Qt.	Clean	Check	Lubrication	Replace	Descriptions
1	Conveyance section	Paddle unit	3				●	

2.2.6 SD-511

(1) Periodical maintenance 1 (total counter; every 300,000 counts)

No.	Section	Description/part name	Qt.	Clean	Check	Lubrication	Replace	Descriptions
1	Overall	Paper feed and image conditions	-		●			
2		Appearance	-	●	●			
3	Conveyance section	Conveyance roller	-	●				
4		Upper paddle	4	●				
5		Lower paddle	8	●				
6	Folding section	Folding roller	-	●				

(2) Periodical maintenance 2 (life counter; every 2,000,000 counts)

No.	Section	Description/part name	Qt.	Clean	Check	Lubrication	Replace	Descriptions
1	Conveyance section	Upper paddle assy	1				●	
2		Lower paddle unit	4				●	

2.2.7 FS-533

(1) Periodical maintenance 1 (total counter; every 300,000 counts)

No.	Section	Description/part name	Qt.	Clean	Check	Lubrication	Replace	Descriptions
1	Overall	Paper feed and image conditions	-		●			
2		Appearance	-	●	●			
3	Conveyance section	Roller and rolls	-	●				
4	Paper exit section	Paddle	4	●				

(2) Periodical maintenance 2 (life counter; every 1,000,000 counts)

No.	Section	Description/part name	Qt.	Clean	Check	Lubrication	Replace	Descriptions
1	Alignment section	Alignment roller assy/ F	1				●	*1
2		Alignment roller assy/ R	1				●	

- *1: Replace those parts at the same time.

3. Periodical replacement parts list

- To ensure that the machine produces good copies and to extend its service life, it is recommended that the maintenance jobs described in this schedule be carried out as instructed.
- Replace with reference to the numeric values displayed on the total counter, the life counter or the messages displayed on the control panel.
- Maintenance conditions are based on the case of A4 or 8 $^{1}/_{2}$ x 11, standard mode and low power mode OFF.

		B/W
Standard mode	bizhub 364e	4 pages per job
	bizhub 284e	3 pages per job
	bizhub 224e	2 pages per job

3.1 bizhub 364e/284e/224e

Classification	Parts name		Parts No.	Qty.	Replacing cycle	Descriptions	Ref. page
Paper feed section	Tray 1 pick-up roller		A5C1 5622 ##	1	300,000	*2, *4	F.6.9.1 Replacing the tray 1 feed roller, tray 1 pick-up roller, tray 1 separation roller
	Tray 1 feed roller		A00J 5636 ##	1	300,000		
	Tray 1 separation roller			1	300,000		
	Tray 2 pick-up roller		A5C1 5622 ##	1	300,000	*2, *4	F.6.9.2 Replacing the tray 2 feed roller, tray 2 pick-up roller, tray 2 separation roller
	Tray 2 feed roller		A00J 5636 ##	1	300,000		
	Tray 2 separation roller			1	300,000		
	Manual bypass tray feed roller		A00F 6232 ##	1	200,000	*2, *4	F.6.9.3 Replacing the manual bypass tray feed roller, manual bypass tray separation roller assy
	Manual bypass tray separation roller assy		4658 0151 ##	1	200,000		
Processing section	Toner cartridge *1	bizhub 364e	-	1	24,000		F.6.5.1 Replacing the toner cartridge
		bizhub 284e	-	1	24,000		
		bizhub 224e	-	1	24,000		
	Drum unit *1	bizhub 364e	-	1	120,000	*3	F.6.2.1 Replacing the drum unit
		bizhub 284e	-	1	120,000		
		bizhub 224e	-	1	70,000		
	Developing unit	bizhub 364e	-	1	590,000 (US)/600,000 (EU)	*3	F.6.4.1 Replacing the developing unit
		bizhub 284e	-	1	590,000 (US)/600,000 (EU)		
		bizhub 224e	-	1	590,000 (US)/600,000 (EU)		
	Ozone filter	bizhub 364e	A161 R727 ##	1	300,000	*3, *5	F.6.1.1 Replacing the ozone filter
		bizhub 284e		1	280,000		
		bizhub 224e		1	225,000		
	Waste toner box *1		A4NN WY1	1	(100,000)	*3, *6	F.6.8.1 Replacing the waste toner box
Image transfer section	Transfer belt unit	bizhub 364e	A16D R700 ##	1	300,000	*3	F.6.6.3 Replacing the transfer belt unit
		bizhub 284e		1	280,000		
		bizhub 224e		1	225,000		
	Transfer roller unit	bizhub 364e	A161 R714 ##	1	300,000	*3, *5	F.6.7.1 Replacing the transfer roller unit
		bizhub 284e		1	280,000		
		bizhub 224e		1	225,000		
Fusing section	Fusing unit	bizhub 364e	A161 R718 ##	1	120 V 590,000	*3	F.6.11.1 Replacing the fusing unit
		bizhub 284e					
		bizhub 224e					
		bizhub 364e	A61F R710 ##	1	220 - 240V 600,000	*3	
		bizhub 284e					
		bizhub 224e					

*1: The parts can be replaced either by user or service engineer.
*2: Actual durable cycle (life counter value)

*3: Field standard yield C.1.4 Materials
*4: Replace those three parts at the same time.
*5: The ozone filter and the transfer roller unit are furnished with the transfer belt unit so that all of them are replaced at same time.
*6: A waste toner full condition is detected with detecting the actual waste toner emissions.

3.2 Option

3.2.1 DF-701

Parts name	Parts No.	Qt.	Replacing cycle	Descriptions	Ref. Page
Pick-up roller	A143 PP52 ##	2	200,000	*1 *2	F.7.1.3 Replacing the pick-up roller/feed roller
Feed roller	A143 5631 ##	1	200,000		
Separation roller assy	A3CF PP4H ##	1	200,000		F.7.1.4 Replacing the separation roller assy

*1: Actual durable cycle (life counter value)
*2: Replace those parts at the same time.

3.2.2 DF-624

Parts name	Parts No.	Qt.	Replacing cycle	Descriptions	Ref. Page
Pick-up roller	A143 PP52 ##	2	200,000	*1 *2	F.8.1.3 Replacing the pick-up roller/feed roller
Feed roller	A143 5631 ##	1	200,000		
Separation roller assy	A3CF PP4H ##	1	200,000		F.8.1.4 Replacing the separation roller assy

*1: Actual durable cycle (life counter value)
*2: Replace those parts at the same time.

3.2.3 PC-110

Parts name	Parts No.	Qt.	Replacing cycle	Descriptions	Ref. Page
Pick-up roller	A00J 5636 ##	1	300,000	*1 *2	F.9.1.1 Replacing the tray 3 feed roller, tray 3 pick-up roller, tray 3 separation roller
Feed roller	A00J 5636 ##	1	300,000		
Separation roller	A00J 5636 ##	1	300,000		

*1: Actual durable cycle (life counter value)
*2: Replace those parts at the same time.

3.2.4 PC-210

Parts name	Parts No.	Qt.	Replacing cycle	Descriptions	Ref. Page
Pick-up roller	A00J 5636 ##	2	300,000	*1 *2	F.9.1.1 Replacing the tray 3 feed roller, tray 3 pick-up roller, tray 3 separation roller F.9.1.2 Replacing the tray 4 feed roller, tray 4 pick-up roller, tray 4 separation roller
Feed roller	A00J 5636 ##	2	300,000		
Separation roller	A00J 5636 ##	2	300,000		

*1: Actual durable cycle (life counter value)
*2: Replace those parts at the same time.

3.2.5 PC-410

Parts name	Parts No.	Qt.	Replacing cycle	Descriptions	Ref. Page
Pick-up roller	A00J 5636 ##	1	300,000	*1 *2	F.10.1.1 Replacing the feed roller, pick-up roller, separation roller
Feed roller	A00J 5636 ##	1	300,000		
Separation roller	A00J 5636 ##	1	300,000		

*1: Actual durable cycle (life counter value)
*2: Replace those parts at the same time.

3.2.6 FS-534

Parts name	Parts No.	Qt.	Replacing cycle	Descriptions	Ref. Page
Paddle unit	A3EP PPD3 ##	2	2,000,000	*1	F.11.1.3 Replacing the paddle units
	A3EP PPD4 ##	1	2,000,000		

*1: Actual durable cycle (life counter value)

3.2.7 SD-511

Parts name	Parts No.	Qt.	Replacing cycle	Descriptions	Ref. Page
Upper paddle assy	A3ER PP38 ##	1	2,000,000	*1	F.12.1.4 Replacing the upper paddle assy

Parts name	Parts No.	Qt.	Replacing cycle	Descriptions	Ref. Page
Lower paddle unit	A3ER PP7Y ##	4	2,000,000	*1	F.12.1.5 Replacing the lower paddle unit

*1: Actual durable cycle (life counter value)

3.2.8 FS-533

Parts name	Parts No.	Qt.	Replacing cycle	Descriptions	Ref. Page
Alignment roller assy/ F	A2YU PPK0 ##	1	1,000,000	*1 *2	F.12.1.4 Replacing the upper paddle assy
Alignment roller assy/ R	A2YU PPK1 ##	1	1,000,000		F.12.1.5 Replacing the lower paddle unit

*1: Actual durable cycle (life counter value)
*2: Replace those parts at the same time.

4. Periodical cleaning parts list

- Clean with reference to the numeric values displayed on the total counter, the life counter or the messages displayed on the control panel.

4.1 Main unit

Classification	Parts name	Cleaning cycle	Descriptions	Ref. Page
Conveyance section	Registration roller	60,000	*1	F.6.10.1 Cleaning of the registration roller
Processing section	Electrostatic charger comb electrode	When toner cartridge is replaced	*1	F.6.3.1 Cleaning of the electrostatic charger comb electrode
Image transfer section	Area around the waste toner collecting port	60,000	*1	F.6.8.2 Cleaning of the area around the waste toner collecting port
	Image transfer entrance guide	240,000 or When transfer belt unit is replaced	*1	F.6.6.1 Cleaning of the image transfer entrance guide
	IDC sensor window	240,000 or When transfer belt unit is replaced	*1	F.6.6.2 Cleaning of the IDC sensor window
Duplex section	Duplex transport roller	60,000	*1	F.6.12.1 Cleaning of the duplex transport rollers

*1: Total counter value

4.2 DF-701

Parts name	Cleaning cycle	Descriptions	Ref. Page
Pick-up roller	50,000	*1	F.7.1.1 Cleaning of the pick-up roller/feed roller
Feed roller	50,000	*1	
Separation roller	50,000	*1	F.7.1.2 Cleaning of the separation roller
Rollers and rolls	50,000	*1	F.7.2.1 Cleaning of the miscellaneous rolls
			F.7.2.2 Cleaning of the miscellaneous rollers
Front side scanning guide	50,000	*1	F.7.3.1 Cleaning of the front side scanning guide
Reflective sensor section	50,000	*1	F.7.3.2 Cleaning of the reflective sensor section

*1: Total counter value

4.3 DF-624

Parts name	Cleaning cycle	Descriptions	Ref. Page
Pick-up roller	50,000	*1	F.8.1.1 Cleaning of the pick-up roller/feed roller
Feed roller	50,000	*1	
Separation roller	50,000	*1	F.8.1.2 Cleaning of the separation roller
Rollers and rolls	50,000	*1	F.8.2.1 Cleaning of the miscellaneous rolls
			F.8.2.2 Cleaning of the miscellaneous rollers
Scanning guide	50,000	*1	F.8.3.1 Cleaning of the scanning guide
Reflective sensor section	50,000	*1	F.8.3.2 Cleaning of the reflective sensor section

*1: Total counter value

4.4 FS-534

Parts name	Cleaning cycle *1	Descriptions	Ref. Page
Roller and rolls	300,000	*1	F.11.1.1 Cleaning procedure for each rollers/ each rolls
Paddle	300,000	*1	F.11.1.2 Cleaning the paddles

*1: Total counter value

4.5 SD-511

Parts name	Cleaning cycle	Descriptions	Ref. Page
Conveyance roller	300,000	*1	F.12. Periodical maintenance procedure SD-511
Folding roller	300,000	*1	
Upper paddle	300,000	*1	
Lower paddle	300,000	*1	

*1: Total counter value

4.6 FS-533

Parts name	Cleaning cycle	Descriptions	Ref. Page
Roller and rolls	300,000	*1	F.13. Periodical maintenance procedure FS-533
Paddle	300,000	*1	

*1: Total counter value

5. Concept of parts life

5.1 Life value of consumables and parts

- The life counter value of each material and parts is available from [Service Mode] -> [Counter] -> [Life].
- Life specification value means an actual life terminated when prints are made under the conditions as defined in the next section, “Conditions for life specifications values.”
  The actual life may vary greatly depending on how the machine has been used and other factors.
- “M” refers to the rotation time of each unit.

Consumables/parts name	Target model	Field standard yield *1		Near life	Life	Life stop
Drum unit	364e	120,000 sheets		-	6244M	6811M
	284e	120,000 sheets		-	7621M	8314M
	224e	70,000 sheets		-	7522M	8314M
Developing unit	364e	US	590,000 sheets	-	600,000 counts	610,000 counts
		EU	600,000 sheets	-		
	284e	US	590,000 sheets	-		
		EU	600,000 sheets	-		
	224e	US	590,000 sheets	-		
		EU	600,000 sheets	-		
Transfer belt unit	364e	300,000 sheets		-	22088M	24096M
	284e	280,000 sheets		-		
	224e	225,000 sheets		-		
Transfer roller unit	364e	300,000 sheets		-	26960M	29411M
	284e	280,000 sheets		-		
	224e	225,000 sheets		-		
Ozone filter	364e	300,000 sheets		-	26960M	29411M
	284e	280,000 sheets		-		
	224e	225,000 sheets		-		
Toner cartridge	364e	-		23,000 sheets	24,000 sheets	-
	284e	-		23,000 sheets	24,000 sheets	-
	224e	-		23,000 sheets	24,000 sheets	-
Waste toner box	-	-		98,000 sheets	100,000 sheets	-
Fusing unit	364e	US	590,000 sheets	-	600,000 counts	630,000 counts
		EU	600,000 sheets	-		
	284e	US	590,000 sheets	-		
		EU	600,000 sheets	-		
	224e	US	590,000 sheets	-		
		EU	600,000 sheets	-		

- *: For details of conditions of field standard yield, see “F.5.1.1 Specified conditions of field standard yield”.

5.1.1 Specified conditions of field standard yield

	bizhub 364e	bizhub 284e	bizhub 224e
Printing	4 P/J	3 P/J	2 P/J
Paper size	LEF: 93% SEF: 7%	LEF: 93 % SEF: 7%	LEF: 93 % SEF: 7%
Average of coverage	6 %		
Average print volume/month	6,500 prints/month (US) 7,800 prints/month (EU)	4,800 prints/month (US) 5,500 prints/month (EU)	3,800 prints/month (US) 4,200 prints/month (EU)

5.2 Details of the life specifications

Item	Description
Waste toner box	The waste toner full sensor detects near full for the toner replenishment level of the waste toner box. When the waste toner near full is detected, the waste toner counter starts counting, and the waste toner full is detected when the life threshold is reached.
Fusing unit	When the number of printed pages *1 reaches the set life value, the end of unit life is detected.
Transfer belt unit	Number of prints *1 and rotation time of the transfer belt are counted, and detected when one of those two reaches to the life value.
Transfer roller unit	Rotation time of the transfer belt is counted, and detected when it reaches to the set life value. *2
Ozone filter	Rotation time of the transfer belt is counted, and detected when it reaches to the set life value. *2
Drum unit	Rotation time of the photo conductor and number of prints *1 are counted, and detected when one of those values reaches to the set life value. However, only the photo conductor rotation time is available from the life counter.
Developing unit	When the number of printed pages *1 reaches the set life value, the end of unit life is detected.

*1: For counting with number of prints, the paper size in the sub scan direction is accumulated and counts one when it reaches to 216.0 mm. For the paper with sub scan size of less than 216.0mm, it is accumulated with the size of 216.0 mm.
*2: As the transfer roller unit and the ozone filter are included in the transfer belt unit, they are replaced all together. When the transfer belt unit is replaced and New Release is performed, the life counter value is reset.

6. Periodical maintenance procedure bizhub 364e/284e/224e

NOTE

- **The alcohol described in the cleaning procedure of maintenance represents the isopropyl alcohol.**

6.1 Housing section

6.1.1 Replacing the ozone filter

(1) Periodically replacing parts/cycle

- Ozone filter: Every 300,000 sheets (bizhub 364e)
- Ozone filter: Every 280,000 sheets (bizhub 284e)
- Ozone filter: Every 225,000 sheets (bizhub 224e)

* The ozone filter is supplied with the transfer belt unit, and these are replaced at the same time.

(2) Procedure

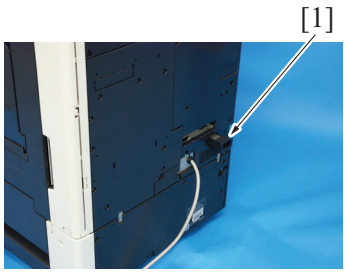

1. Grip the handle on the ozone filter [1] and slide it out of the machine.

2. To reinstall, reverse the order of removal.

6.2 Photo conductor section

6.2.1 Replacing the drum unit

(1) Periodically replacing parts/cycle

- Drum unit: Every 120,000 sheets (bizhub 364e)
- Drum unit: Every 120,000 sheets (bizhub 284e)
- Drum unit: Every 70,000 sheets (bizhub 224e)

(2) Removal procedure

1. Open the front door.
2. Remove the waste toner box.
   F.6.8.1 Replacing the waste toner box

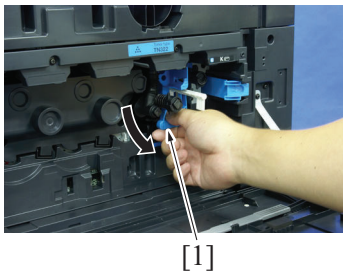

3. Turn the drum unit lock lever [1] and release the lock..

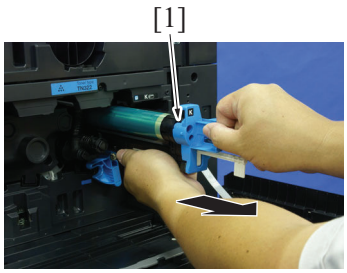

4. Pull the drum unit [1] to you and remove it from the machine.

(3) Reinstall procedure

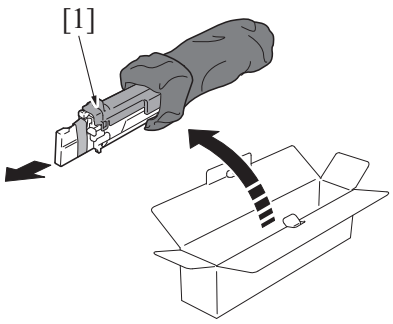

1. Remove the drum unit [1] from its package.
2. Remove the drum unit [1] from the plastic bag.

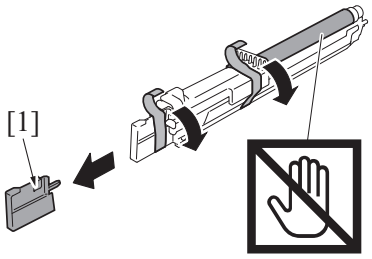

3. Remove the tape and packing material [1].
   NOTE
   - **Do not hold the drum unit by the upper part. Holding it by the upper part can cause scratches on the surface of the photo conductor, resulting in the deterioration of image quality.**

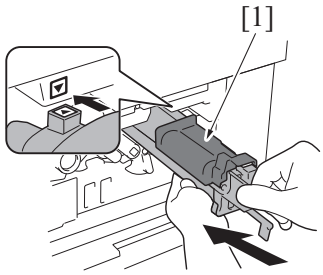

4. Align the "▲" mark on the drum unit with the "▼" mark on the machine and insert the drum unit [1] into the machine.

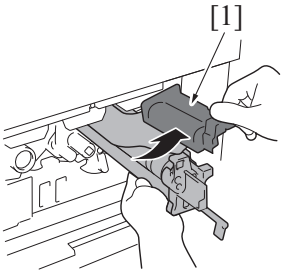

5. Remove the photo conductor protective sheet [1].

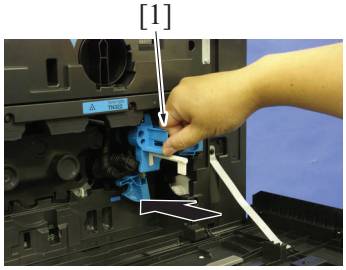

6. Completely insert the drum unit [1].

7. Turn the drum unit lock lever [1] and lock the drum unit.
NOTE
- **If the lock lever is hard to rotate, turn the lever while pushing the drum unit to the rear.**

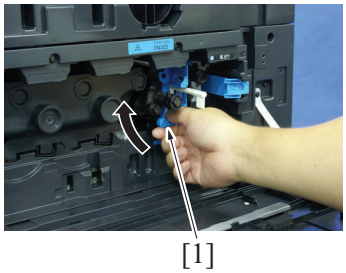

8. Reinstall the waste toner box.
9. Close the front door.
10. Select [Service Mode] -> [Imaging Process Adjustment] -> [Gradation Adjust] and carry out gradation adjust.

6.3 Charging section

6.3.1 Cleaning of the electrostatic charger comb electrode

(1) Periodically cleaning parts/cycle

- Electrostatic charger comb electrode: when toner cartridge is replaced

(2) Procedure

1. Open the front door.

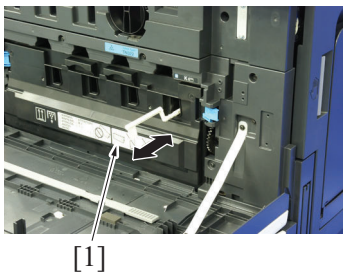

2. Slowly pull out the charger-cleaning tool [1] as far as possible. Next, slowly push in the charger-cleaning tool as far as possible. Repeat the above operations three times.
NOTE
- **Move the charger-cleaning tool slowly all the way to the end of either way.**

6.4 Developing section

6.4.1 Replacing the developing unit

(1) Periodically replacing parts/cycle

- Developing unit : Every 590,000 (US)/600,000 (EU)

(2) Procedure

1. Open the front door.
2. Remove the waste toner box.
F.6.8.1 Replacing the waste toner box
3. Remove the lower front cover.
G.5.2.14 Lower front cover
4. Remove the drum unit.
F.6.2.1 Replacing the drum unit

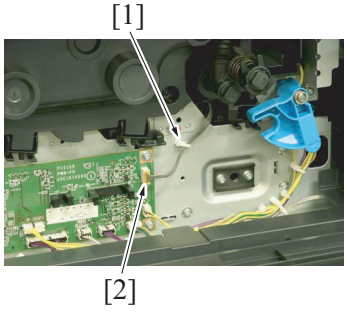

5. Remove the harness from the wire saddle [1], and disconnect the connector [2].

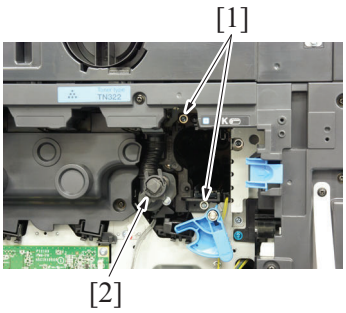

6. Remove two screws [1], and remove the developing unit [2].

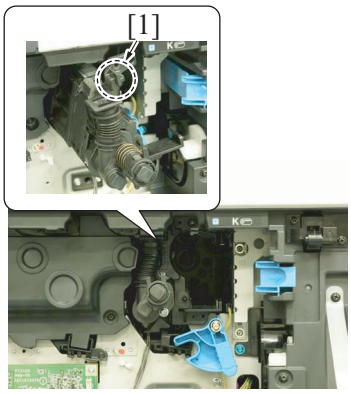

7. To reinstall, reverse the order of removal.
NOTE
- **To install the two screws in the developing unit, press the position [1] with your finger as shown in the illustration.**

8. Carry out the [Service Mode] -> [Image Process Adjustment] -> [Gradation Adjust].

6.5 Toner supply section

6.5.1 Replacing the toner cartridge

(1) Periodically replacing parts/cycle

- Toner cartridge : Every 24,000 prints

(2) Removal procedure

1. Open the front door.

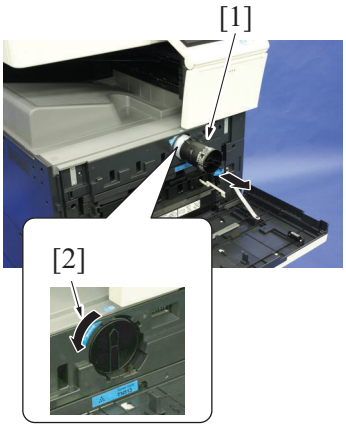

2. Turn the toner cartridge [1] in the direction [2] as shown in the illustration to release the lock.
3. Remove the toner cartridge [1].

(3) Reinstall procedure

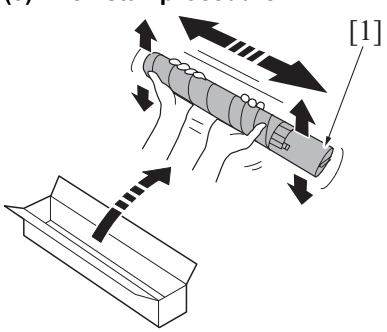

1. Remove the new toner cartridge [1] from its packaging, and the shake the cartridge side to side 5 to 10 times.
NOTE
- **Shake the toner cartridge well. If shaking is not enough, that may cause trouble.**



2. Insert the toner cartridge [1] into the machine.
NOTE
- **Make sure that the blue label position of the toner cartridge is matched with the one of the machine side.**

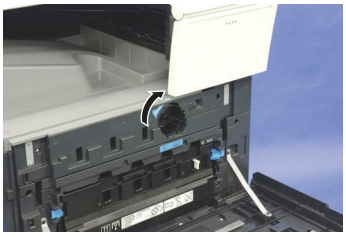

3. Completely insert the toner cartridge into the machine and turn it in the direction as shown in the illustration in order to fix the toner cartridge.

4. When the toner cartridge is replaced, clean the electrostatic charger comb electrode.
F.6.3.1 Cleaning of the electrostatic charger comb electrode

6.6 1st transfer section

6.6.1 Cleaning of the image transfer entrance guide

(1) Periodically cleaning parts/cycle

- Image transfer entrance guide: Every 240,000 counts or when the transfer belt unit is replaced.

(2) Procedure

1. Remove the transfer belt unit.
F.6.6.3 Replacing the transfer belt unit

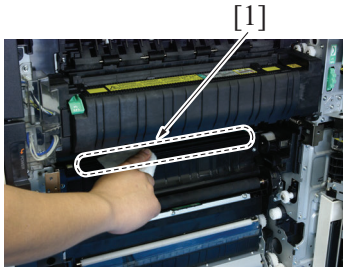

2. Wipe the image transfer entrance guide [1] clean of spilled toner and dirt using a cleaning pad with water or alcohol.

6.6.2 Cleaning of the IDC sensor window

(1) Periodically cleaning parts/cycle

- IDC sensor window: Every 240,000 counts or when the transfer belt unit is replaced.

(2) Procedure

1. Remove the transfer belt unit.
F.6.6.3 Replacing the transfer belt unit

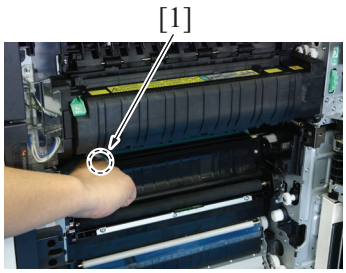

2. Wipe the surface of the IDC sensor window [1] clean of spilled toner and dirt.
NOTE
- **Do not wipe out with any solvents or alcohols.**

6.6.3 Replacing the transfer belt unit

(1) Periodically replacing parts/cycle

- Transfer belt unit : Every 300,000 sheets (bizhub 364e)
- Transfer belt unit : Every 280,000 sheets (bizhub 284e)
- Transfer belt unit : Every 225,000 sheets (bizhub 224e)

NOTE
- **Before replacement operations of the transfer belt unit, make sure to turn OFF the main power switch.**

(2) Removal procedure

1. Remove the waste toner box.
F.6.8.1 Replacing the waste toner box

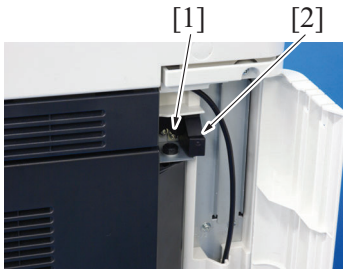

2. Remove the screw [1], and remove the right door stopper (upper section) [2].

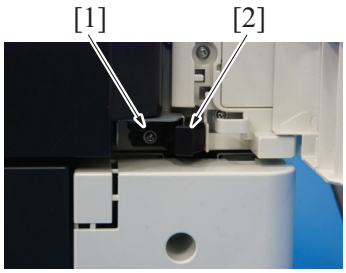

3. Remove the screw [1], and remove the right door stopper (lower section) [2].

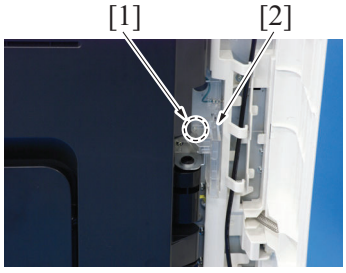

4. Remove the screw [1], and remove the connector cover [2].

5. Open the right door and the regist unit.

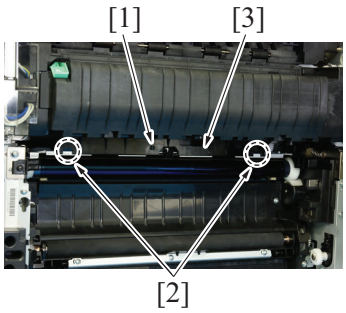

6. Remove the screw [1] and two tabs [2], and remove the 2nd transfer paper winding prevention guide [3].

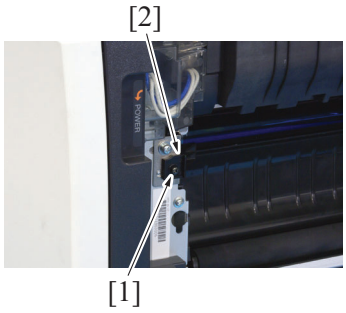

7. Remove the screw [1], and remove the stopper [2].

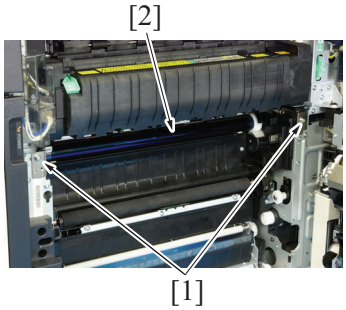

8. Remove two screws [1] and unlock the transfer belt unit [2].

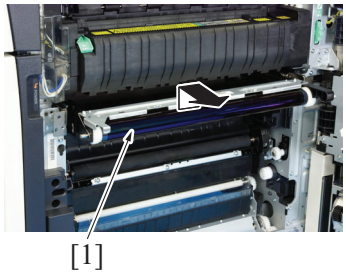

9. Hold the both sides and lift it to take out the transfer belt unit [1] a little.

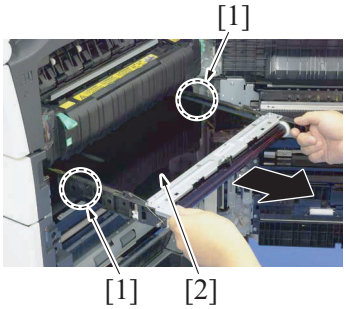

10. Hold the position [1] and remove the transfer belt unit [2].
NOTE
- **Do not touch the surface of the Image transfer belt unit.**
- **Cover the image transfer belt unit with something such shade cloth to protect its surface from dust or foreign matter.**
- **If accidentally touched the surface of the transfer belt, lightly wipe it using the Hydro-wipe (65AA-99##). Do not clean with alcohol or water.**

(3) Reinstall procedure

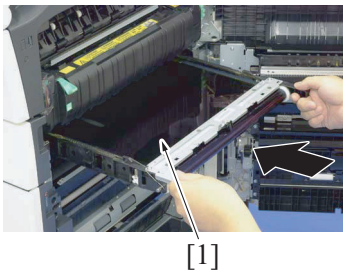

1. Insert the transfer belt unit [1].
   NOTE
   - **Insert the transfer belt unit with care not to allow its docking gear to be damaged by hitting it against the rail or associated part.**
   - **Do not touch the surface of the image transfer belt unit.**
   - **Cover the image transfer belt unit with something such shade cloth to protect its surface from dust or foreign matter.**
   - **If accidentally touched the surface of the transfer belt, lightly wipe it using the Hydro-wipe (65AA-99##). Do not clean with alcohol or water.**

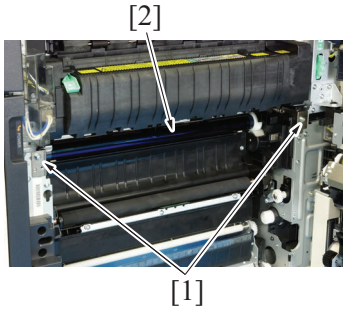

2. Install the transfer belt unit [2] with two screws [1].
   NOTE
   - **Replace the ozone filter and the transfer roller unit, which are supplied with the transfer belt unit, at the same time.**
3. Install the 2nd transfer paper winding prevention guide.
4. To reinstall, reverse the order of removal.
5. Turn ON the main power switch.
6. Carry out the [Service Mode] -> [Counter] -> [Life] -> [New Release].
7. Select [Service Mode] -> [Imaging Process Adjustment] -> [Gradation Adjust] and carry out gradation adjust.

6.7 2nd transfer/separation section

6.7.1 Replacing the transfer roller unit

(1) Periodically replacing parts/cycle

- Transfer belt unit : Every 300,000 sheets (bizhub 364e)
- Transfer belt unit : Every 280,000 sheets (bizhub 284e)
- Transfer belt unit : Every 225,000 sheets (bizhub 224e)

* The transfer roller unit is supplied with the transfer belt unit, and these are replaced at the same time.

(2) Removal procedure

1. Open the right door and the regist unit.

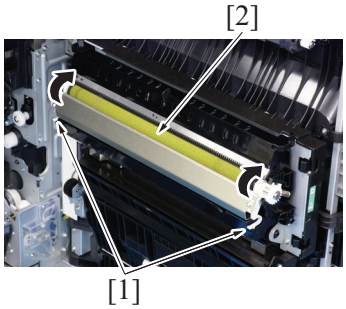

2. Unlock the lock levers [1] of the transfer roller unit (at two places).
3. Holding onto the lock levers [1] (at two places), remove the transfer roller unit [2].

(3) Reinstall procedure

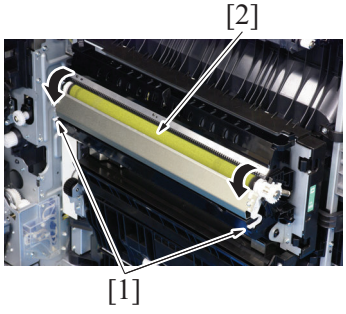

1. Holding onto the lock levers [1] (at two places), mount the new transfer roller unit [2].
2. Lock the lock levers [1] (at two places).
   NOTE
   - **Make sure that the levers are locked in position both at front and rear.**
3. Close the right door.

6.8 Toner collection section

6.8.1 Replacing the waste toner box

(1) Periodically replacing parts/cycle

- Waste toner box: Every 100,000 counts

(2) Removal procedure

1. Open the front door.

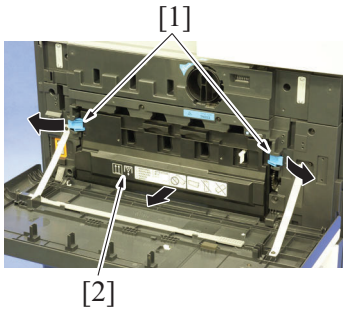

2. Unhook the waste toner box fixing levers [1] and remove the waste toner box [2].
3. Clean the surface around the waste toner collecting port.
F.6.8.2 Cleaning of the area around the waste toner collecting port

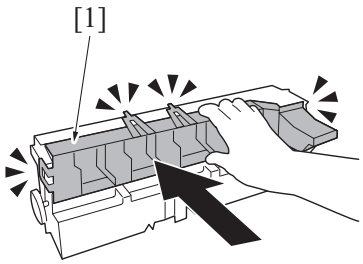

4. Take out the cap [1] from the new waste toner box package, and attach it to the old waste toner box.

(3) Reinstall procedure

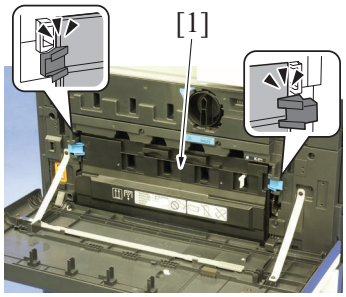

1. Remove the brand new waste toner box from its package and remove the packing material.
2. Set the waste toner box [1].
3. Close the front door.

6.8.2 Cleaning of the area around the waste toner collecting port

(1) Periodically cleaning parts/cycle

- Area around the waste toner collecting port: Every 60,000 counts (upon each call)

(2) Procedure

1. Remove the waste toner box.
F.6.8.1 Replacing the waste toner box



2. Wipe the areas around the waste toner collecting port clean of spilled toner and dirt using a cleaning pad with water or alcohol.

6.9 Paper feed section

6.9.1 Replacing the tray 1 feed roller, tray 1 pick-up roller, tray 1 separation roller

(1) Periodically replacing parts/cycle

- Tray 1 feed roller: Every 300,000 counts
- Tray 1 pick-up roller: Every 300,000 counts
- Tray 1 separation roller: Every 300,000 counts

(2) Procedure

1. Remove the tray 1.
   G.5.2.23 Tray 1
2. Remove the tray 2.
   G.5.2.24 Tray 2

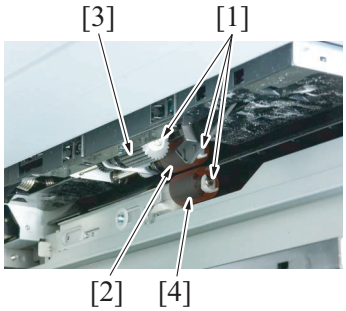

3. Remove the C-clip [1] each, and remove the tray 1 feed roller [2], tray 1 pick-up roller [3] and tray 1 separation roller [4].
4. To reinstall, reverse the order of removal.
5. Select [Service Mode] -> [Counter] -> [Life] and clear the count of [1st.].
   I.11.16.2 Life

6.9.2 Replacing the tray 2 feed roller, tray 2 pick-up roller, tray 2 separation roller

(1) Periodically replacing parts/cycle

- Tray 2 feed roller: Every 300,000 counts
- Tray 2 pick-up roller: Every 300,000 counts
- Tray 2 separation roller: Every 300,000 counts

(2) Procedure

1. Remove the tray 1.
   G.5.2.23 Tray 1
2. Remove the tray 2.
   G.5.2.24 Tray 2

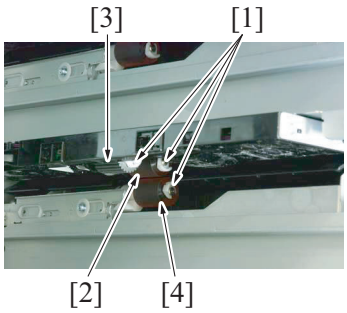

3. Remove the C-clip [1] each, and remove the tray 2 feed roller [2], tray 2 pick-up roller [3] and tray 2 separation roller [4].
4. To reinstall, reverse the order of removal.
5. Select [Service Mode] -> [Counter] -> [Life] and clear the count of [2nd.].
   I.11.16.2 Life

6.9.3 Replacing the manual bypass tray feed roller, manual bypass tray separation roller assy

(1) Periodically replacing parts/cycle

- Manual bypass tray feed roller: Every 200,000 counts
- Manual bypass tray separation roller assy: Every 200,000 counts

(2) Procedure

1. Open the right door.

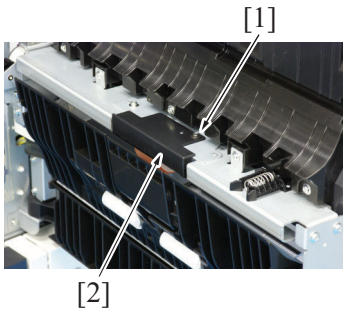

2. Remove the screw [1], and remove the feed roller cover [2].

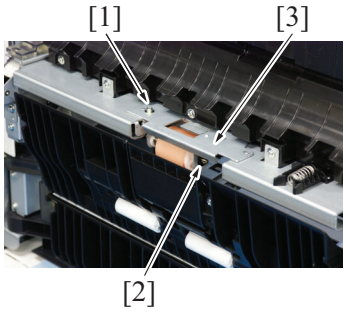

3. Remove the screw [1], and remove the bearing [2] and the metal plate [3].

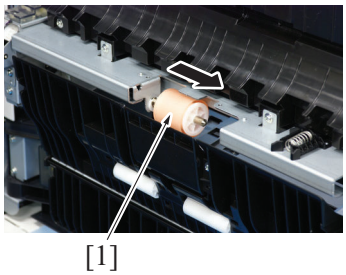

4. Remove the manual bypass tray feed roller [1].

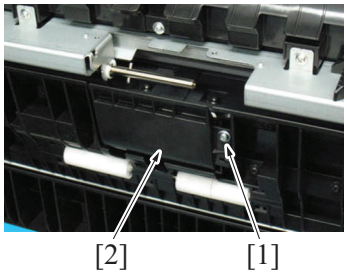

5. Remove the screw [1], and remove the cover [2].

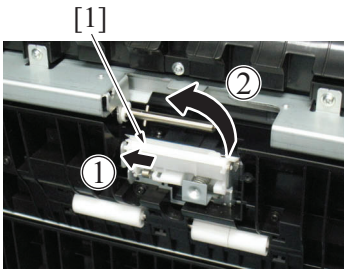

6. Remove the manual bypass tray separation roller unit [1].

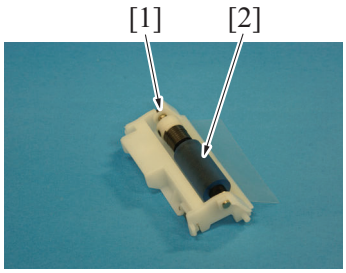

7. Remove the C-ring [1], and remove the manual bypass tray separation roller assy [2].

8. To reinstall, reverse the order of removal.
9. Select [Service Mode] -> [Counter] -> [Life] and clear the count of [Manual Tray].
I.11.16.2 Life

6.10 Registration section

6.10.1 Cleaning of the registration roller

(1) Periodically replacing parts/cycle

- Registration roller: Every 60,000 counts (upon each call)

(2) Procedure

1. Open the right door and the regist unit.

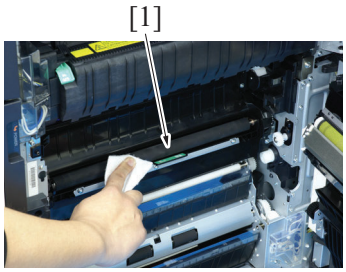

2. Using a cleaning pad with alcohol, wipe the registration roller [1] clean of dirt.

6.11 Fusing section

6.11.1 Replacing the fusing unit

CAUTION

- The temperature gets high in the vicinity of the fusing unit. You may get burned when you come into contact with the area. Before replacement operations, make sure that more than 20 minutes have elapsed since the main power switch was turned off.

(1) Periodically replacing parts/cycle

- Fusing unit: Every 590,000 (US)/600,000 (EU)

(2) Procedure

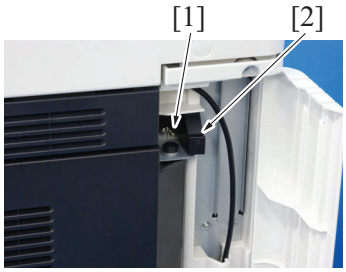

1. Remove the screw [1], and remove the right door stopper (upper section) [2].

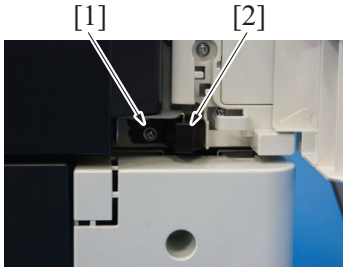

2. Remove the screw [1], and remove the right door stopper (lower section) [2].

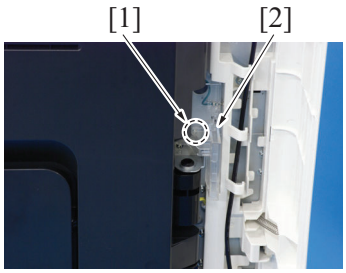

3. Remove the screw [1], and remove the connector cover [2].

4. Open the right door and the regist unit.

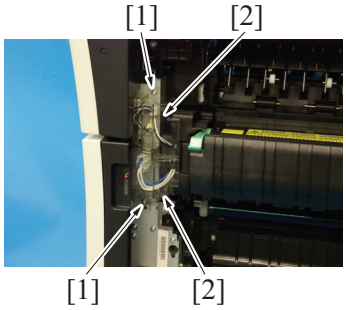

5. Remove the screw [1] each, and remove the two connector protective covers [2].

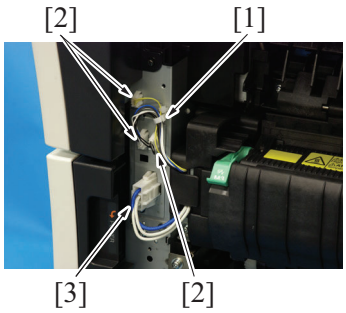

6. Remove the harnesses from the wire saddle [1].
7. Disconnect three connectors [2].
8. Disconnect the connector [3].

NOTE

- **When removing the connecter [3], press the claw to release the lock, then remove it.**

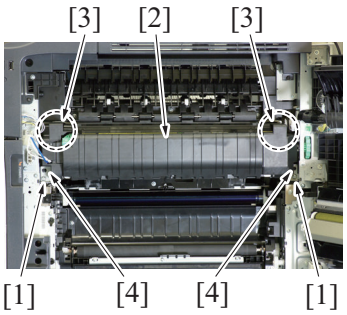

9. Remove two screws [1], and remove the fusing unit [2].
NOTE
- **When removing the fusing unit, hold the parts [3] shown on the picture so that it would not fall.**
- **When installing the fusing unit, make sure that the set pin [4] is inserted in the fusing unit.**

10. To reinstall, reverse the order of removal.
11. Carry out the [Service Mode] -> [Counter] -> [Life] -> [New Release].

6.12 Duplex section

6.12.1 Cleaning of the duplex transport rollers

(1) Periodically cleaning parts/cycle

- Duplex transport rollers: Every 60,000 counts (upon each call)

(2) Procedure

1. Open the right door.

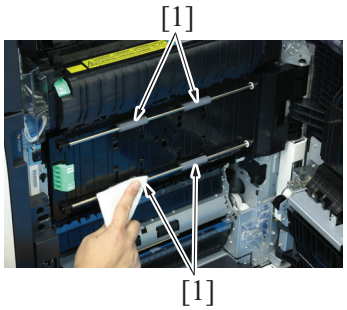

2. Using a cleaning pad with water or alcohol, wipe the duplex transport rollers [1] clean of dirt.

7. Periodical maintenance procedure DF-701

NOTE

- **The alcohol described in the cleaning procedure of maintenance represents the isopropyl alcohol.**

7.1 Take-up section

7.1.1 Cleaning of the pick-up roller/feed roller

(1) Periodically cleaning parts/cycle

- Pick-up roller: Every 50,000 counts
- Feed roller: Every 50,000 counts

(2) Procedure

1. Open the left cover [1].

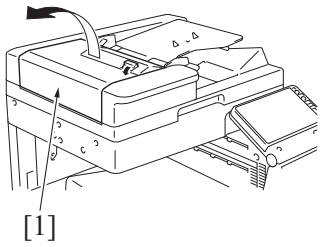

2. Using a cleaning pad with alcohol, wipe the pick-up roller [1] / feed roller [2] clean of dirt.

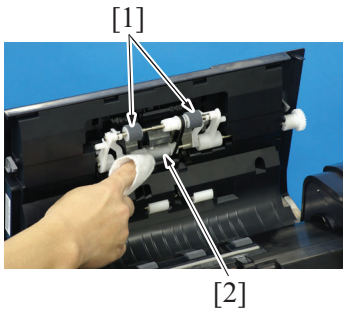

7.1.2 Cleaning of the separation roller

(1) Periodically cleaning parts/cycle

- Separation roller: Every 50,000 counts

(2) Procedure

1. Open the left cover [1].

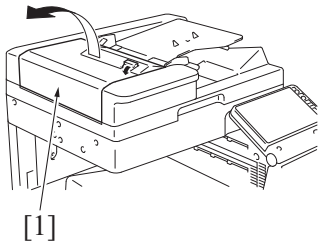

2. Using a cleaning pad with alcohol, wipe the separation roller [1] clean of dirt.

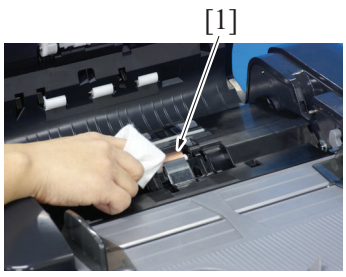

7.1.3 Replacing the pick-up roller/feed roller

(1) Periodically replaced parts/cycle

- Pick-up roller: Every 200,000 counts
- Feed roller: Every 200,000 counts

(2) Procedure

1. Open the left cover [1].

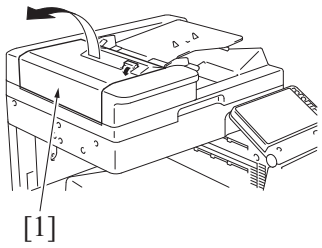

2. Remove the E-ring [1] and the gear assy [2].
   NOTE
   - **When reinstalling the gear assy [2], push the gear assy [2] into position while rotating it.**

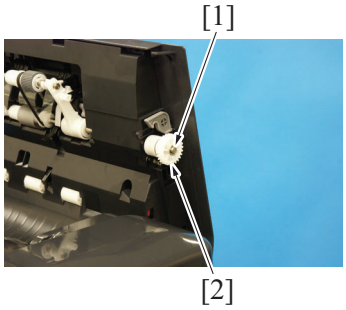

3. Remove the pin [1].
   NOTE
   - **Be careful not to lose the pin [1].**
4. Remove the screw [2] and remove the bearing [3].

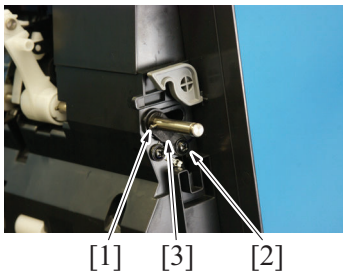

5. Remove the C-clip [1] and slide the bushing [2] in the direction of the arrow.
6. Remove the pick-up roller/feed roller assy [3].

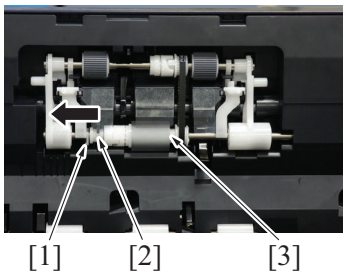

NOTE
- **When installing the pick-up roller/feed roller assy, insert the shaft to the spring [1].**

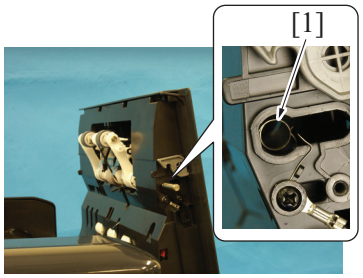

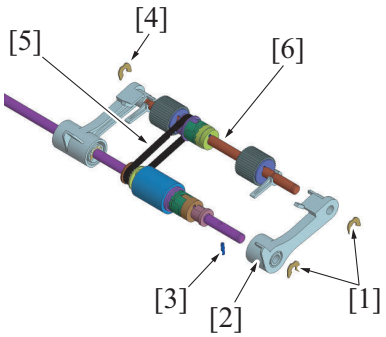

7. Remove two C-rings [1].
8. Remove the arm [2] and the pin [3].
   NOTE
   - **Be careful not to lose the pin [3].**
9. Remove the C-ring [4] and the belt [5], and remove the pick-up roller assy [6].

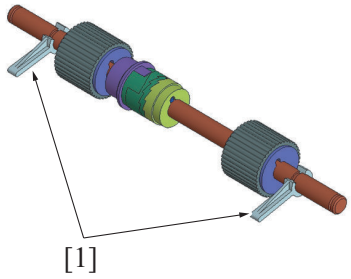

10. Remove two levers [1].

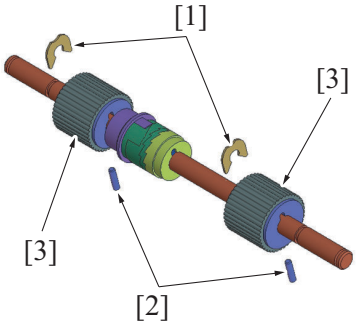

11. Remove two C-rings [1] and two pins [2], and remove two pick-up rollers [3].
    NOTE
    - **Be careful not to lose the pin [2].**

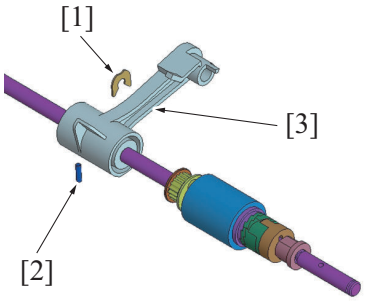

12. Remove the C-ring [1] and the pin [2], and remove the arm [3].
    NOTE
    - **Be careful not to lose the pin [2].**

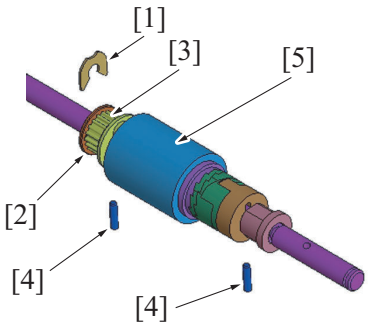

13. Remove the C-ring [1], the pulley [2] and the gear [3].
14. Remove two pins [4], and remove the feed roller [5].
    NOTE
    - **Be careful not to lose the pin [4].**

15. Reinstall the above parts following the removal steps in reverse.

7.1.4 Replacing the separation roller assy

(1) Periodically replaced parts/cycle

- Separation roller assy: Every 200,000 counts

(2) Procedure

1. Open the left cover [1].

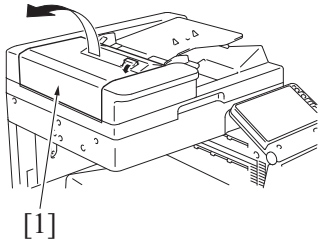

2. Grip both sides [1] of the holder and remove the cover [2].

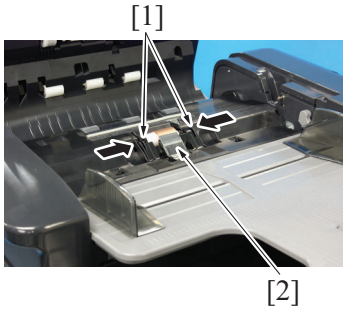

3. Remove the separation roller assy [1].
NOTE
- **Do not lose the spring [2] at the lower part of the separation roller assy [1].**

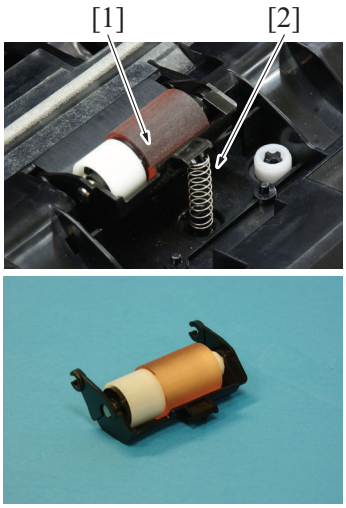

4. Reinstall the above parts following the removal steps in reverse.

7.2 Transport section

7.2.1 Cleaning of the miscellaneous rolls

(1) Periodically cleaning parts/cycle

- Miscellaneous rolls: Every 50,000 counts

(2) Procedure

1. Lift up the document feed tray.
2. Using a cleaning pad dampened with alcohol, wipe the roll [1].

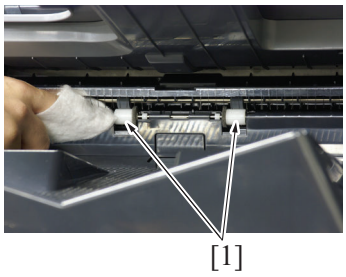

3. Open the left cover [1].

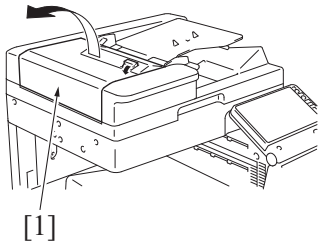

4. Using a cleaning pad dampened with alcohol, wipe the roll [1].

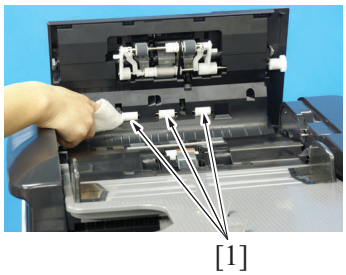

5. Open the opening and closing guide [1].

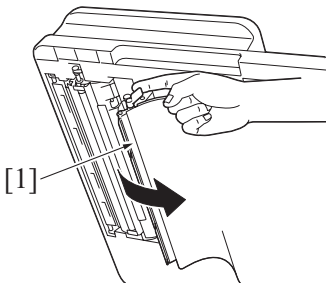

6. Using a cleaning pad dampened with alcohol, wipe the roll [1].

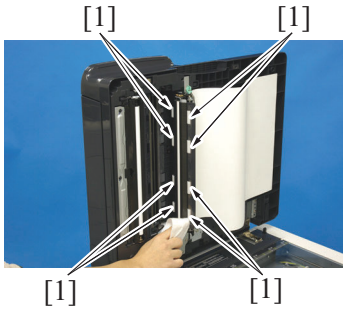

7.2.2 Cleaning of the miscellaneous rollers

(1) Periodically cleaning parts/cycle

- Miscellaneous rollers: Every 50,000 counts

(2) Procedure

1. Lift up the document feed tray.

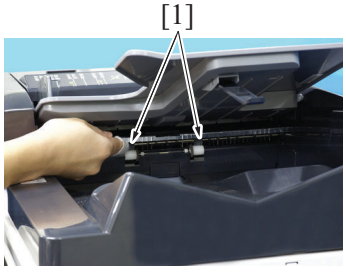

2. Using a cleaning pad dampened with alcohol, wipe the roller [1].

3. Open the left cover [1].

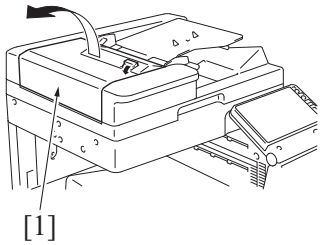

4. Using a cleaning pad dampened with alcohol, wipe the roller [1].

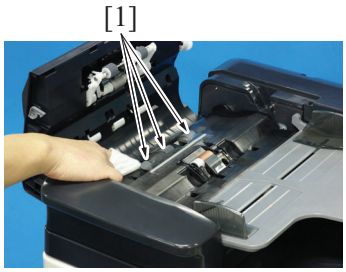

5. Remove the front cover.
   G.6.4.1 Front cover (DF-701)
6. Remove the rear cover.
   G.6.4.2 Rear cover (DF-701)

7. Lift up the document feed tray [1].
8. Remove the claw [2] at the front side, and set the document feed tray [1] off the working area.

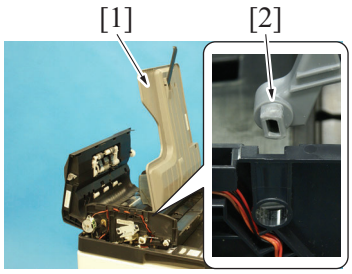

9. Remove 10 screws [1], and remove the transport guide [2].
   NOTE
   - **Use care when mounting the screw [1] in the dashed circle (one on the left when looking from the front) since it is different from other nine screws [1].**

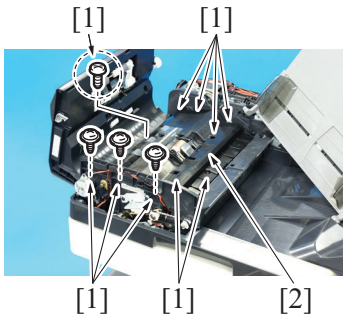

10. Using a cleaning pad dampened with alcohol, wipe the roller [1].

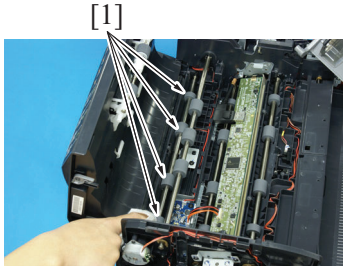

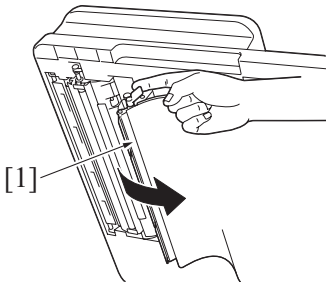

11. Open the opening and closing guide [1].

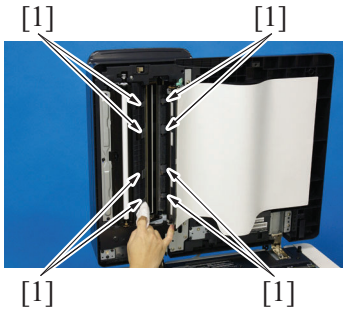

12. Using a cleaning pad dampened with alcohol, wipe the roller [1].

7.3 Scanning section

7.3.1 Cleaning of the front side scanning guide

(1) Periodically cleaning parts/cycle

- Front side scanning guide: Every 50,000 counts

(2) Procedure

1. Open the dual scan document feeder.

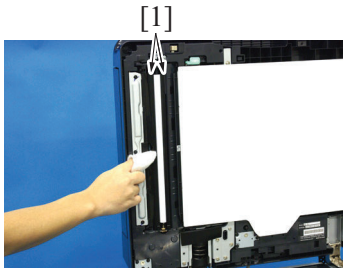

2. Using a cleaning pad dampened with alcohol, wipe the front side scanning guide [1] clean of dirt.
NOTE
- **Be careful not to damage the sheet.**

7.3.2 Cleaning of the reflective sensor section

(1) Periodically cleaning parts/cycle

- Reflective sensor section: Every 50,000 counts

(2) Procedure

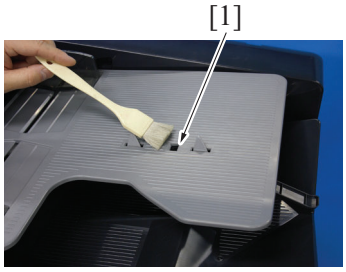

1. Clean the sensor [1] using a brush or other similar tools.

2. Open the dual scan document feeder.

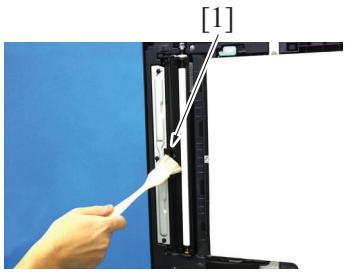

3. Clean the reflective part [1] using a brush or other similar tools.

8. Periodical maintenance procedure DF-624

NOTE

- **The alcohol described in the cleaning procedure of maintenance represents the isopropyl alcohol.**

8.1 Take-up section

8.1.1 Cleaning of the pick-up roller/feed roller

(1) Periodically cleaning parts/cycle

- Pick-up roller: Every 50,000 counts
- Feed roller: Every 50,000 counts

(2) Procedure

1. Open the left cover [1].

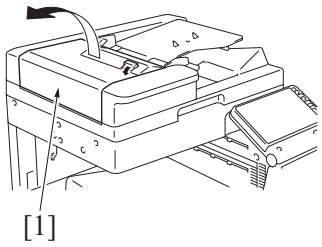

2. Using a cleaning pad with alcohol, wipe the pick-up roller [1] / feed roller [2] clean of dirt.

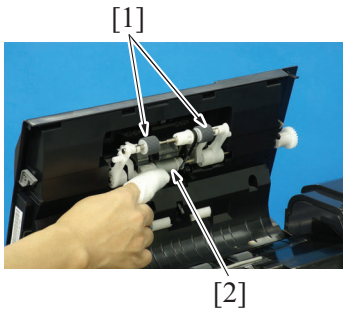

8.1.2 Cleaning of the separation roller

(1) Periodically cleaning parts/cycle

- Separation roller: Every 50,000 counts

(2) Procedure

1. Open the left cover [1].

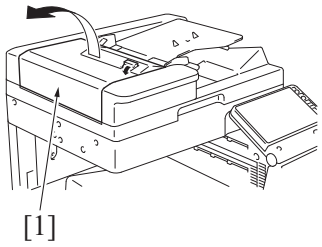

2. Using a cleaning pad with alcohol, wipe the separation roller [1] clean of dirt.

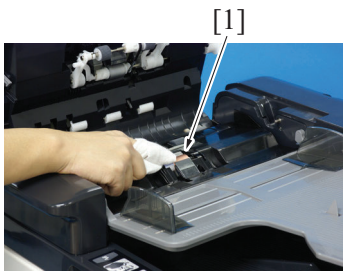

8.1.3 Replacing the pick-up roller/feed roller

(1) Periodically replaced parts/cycle

- Pick-up roller: Every 200,000 counts
- Feed roller: Every 200,000 counts

(2) Procedure

1. Open the left cover [1].

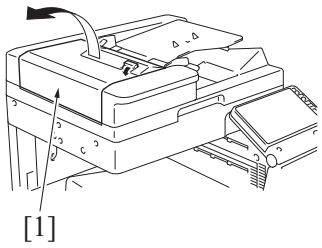

2. Remove the E-ring [1] and the gear assy [2].
   NOTE
   - **When reinstalling the gear assy [2], push the gear assy [2] into position while rotating it.**

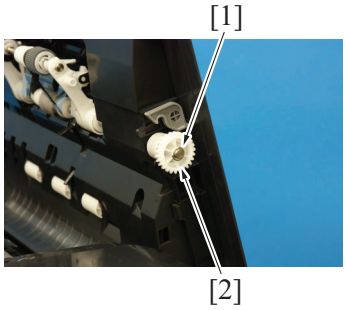

3. Remove the pin [1].
   NOTE
   - **Be careful not to lose the pin [1].**
4. Remove the screw [2] and remove the bearing [3].

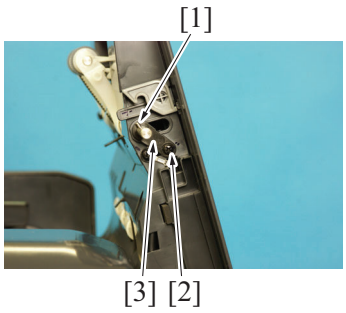

5. Remove the C-clip [1] and slide the bushing [2] in the direction of the arrow.
6. Remove the pick-up roller/feed roller assy [3].

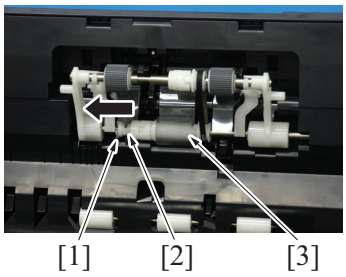

NOTE
- **When installing the pick-up roller/feed roller assy, insert the shaft to the spring [1].**

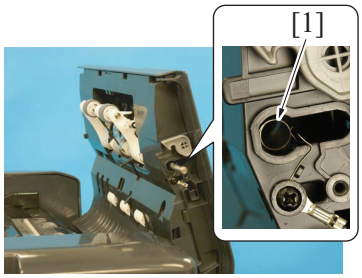

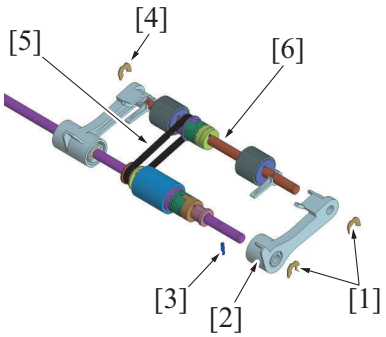

7. Remove two C-rings [1].
8. Remove the arm [2] and the pin [3].
   NOTE
   - **Be careful not to lose the pin [3].**
9. Remove the C-ring [4] and the belt [5], and remove the pick-up roller assy [6].

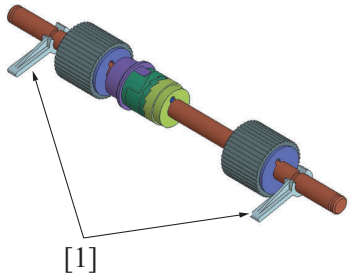

10. Remove two levers [1].

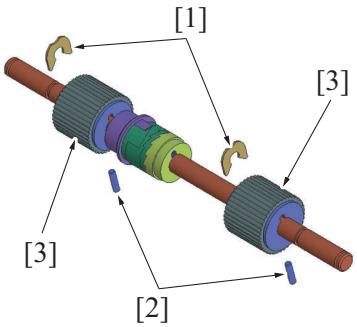

11. Remove two C-rings [1] and two pins [2], and remove two pick-up rollers [3].
    NOTE
    - **Be careful not to lose the pin [2].**

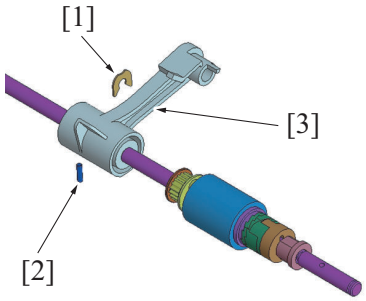

12. Remove the C-ring [1] and the pin [2], and remove the arm [3].
    NOTE
    - **Be careful not to lose the pin [2].**

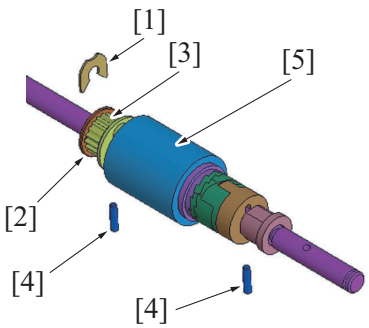

13. Remove the C-ring [1], the pulley [2] and the gear [3].
14. Remove two pins [4], and remove the feed roller [5].
    NOTE
    - **Be careful not to lose the pin [4].**

15. Reinstall the above parts following the removal steps in reverse.

8.1.4 Replacing the separation roller assy

(1) Periodically replaced parts/cycle

- Separation roller assy: Every 200,000 counts

(2) Procedure

1. Open the left cover [1].

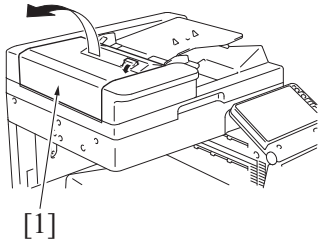

2. Grip both sides [1] of the holder and remove the cover [2].

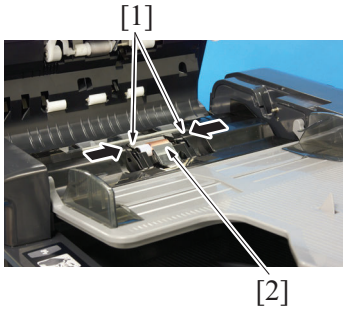

3. Remove the separation roller assy [1].
NOTE
- **Do not lose the spring [2] at the lower part of the separation roller assy [1].**

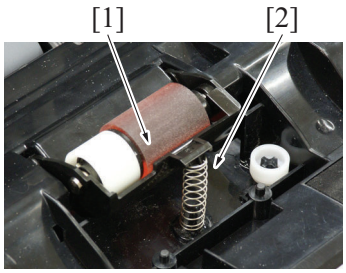

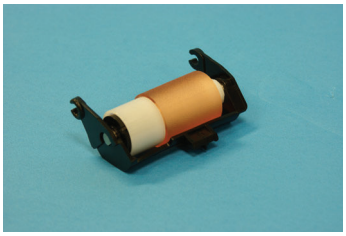

4. Reinstall the above parts following the removal steps in reverse.

8.2 Transport section

8.2.1 Cleaning of the miscellaneous rolls

(1) Periodically cleaning parts/cycle

- Miscellaneous rolls: Every 50,000 counts

(2) Procedure

1. Lift up the document feed tray.

2. Using a cleaning pad dampened with alcohol, wipe the roll [1].

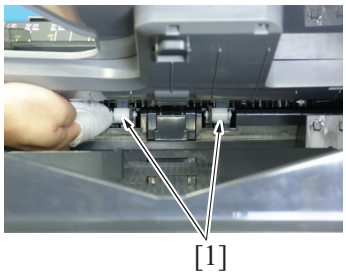

3. Open the left cover [1].

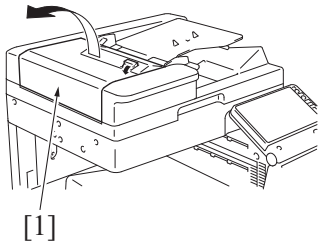

4. Using a cleaning pad dampened with alcohol, wipe the roll [1].

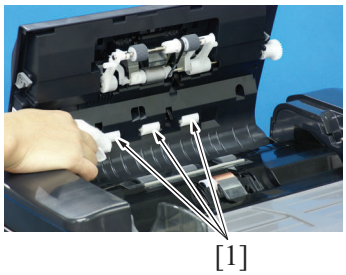

8.2.2 Cleaning of the miscellaneous rollers

(1) Periodically cleaning parts/cycle

- Miscellaneous rollers: Every 50,000 counts

(2) Procedure

1. Lift up the document feed tray.

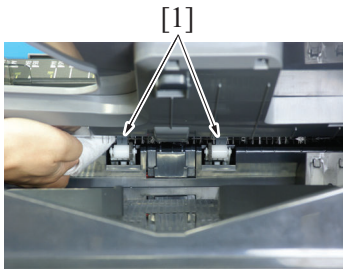

2. Using a cleaning pad dampened with alcohol, wipe the roller [1].

3. Open the left cover [1].

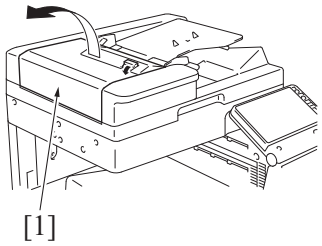

4. Using a cleaning pad dampened with alcohol, wipe the roller [1].

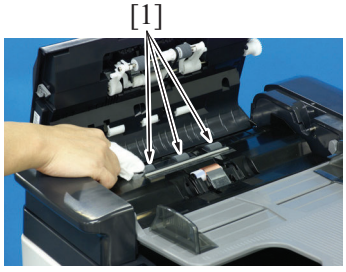

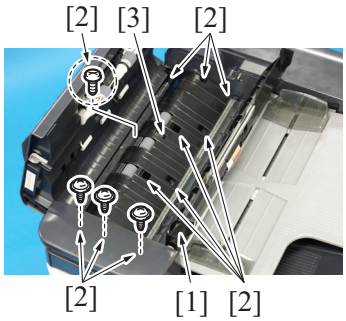

5. Lift up the guide plate DF1 [1].
6. Remove 11 screws [2], and remove the transport guide [3].
   NOTE
   - **Use care when mounting the screw [2] in the dashed circle (one on the left when looking from the front) since it is different from other 10 screws [2].**

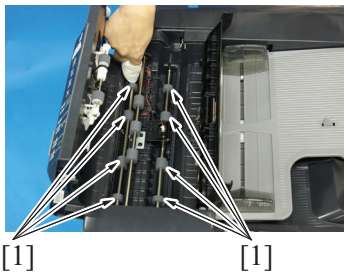

7. Using a cleaning pad dampened with alcohol, wipe the roller [1].

8.3 Scanning section

8.3.1 Cleaning of the scanning guide

(1) Periodically cleaning parts/cycle

- Scanning guide: Every 50,000 counts

(2) Procedure

1. Open the reverse automatic document feeder.

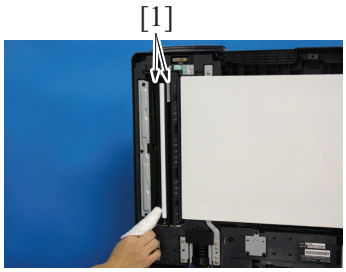

2. Using a cleaning pad dampened with alcohol, wipe the scanning guide [1] clean of dirt.
   NOTE
   - **Be careful not to damage the sheet.**

8.3.2 Cleaning of the reflective sensor section

(1) Periodically cleaning parts/cycle

- Reflective sensor section: Every 50,000 counts

(2) Procedure

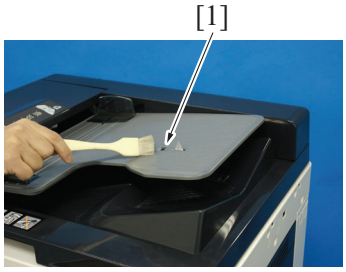

1. Clean the sensor [1] using a brush or other similar tools.

2. Open the reverse automatic document feeder.

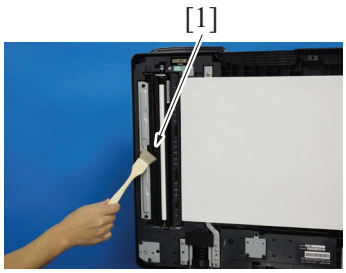

3. Clean the reflective part [1] using a brush or other similar tools.

9. Periodical maintenance procedure PC-110/PC-210

9.1 Paper feed section

9.1.1 Replacing the tray 3 feed roller, tray 3 pick-up roller, tray 3 separation roller

(1) Periodically replacing parts/cycle

- Tray 3 feed roller: Every 300,000 counts
- Tray 3 pick-up roller: Every 300,000 counts
- Tray 3 separation roller + torque limiter: Every 300,000 counts

NOTE

- **Replace the tray 3 feed roller, tray 3 pick-up roller and tray 3 separation roller at the same time.**

(2) Procedure

1. Open the right door.
2. Remove the tray 3.
   G.6.6.4 Tray 3, tray 4, storage box (PC-110/PC-210)
3. Remove the tray 4 or storage box.
   G.6.6.4 Tray 3, tray 4, storage box (PC-110/PC-210)

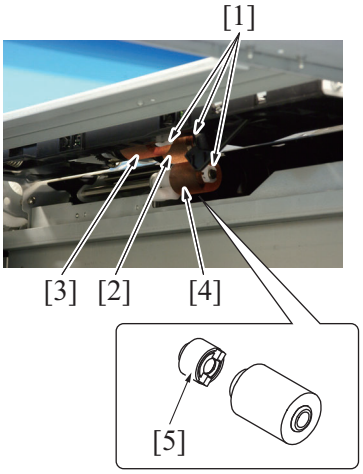

4. Remove the C-clip [1] each, and remove the tray 3 feed roller [2], tray 3 pick-up roller [3] and tray 3 separation roller [4].
   NOTE
   - **When replacing the tray 3 separation roller, replace the torque limiter [5] at the same time.**
5. To reinstall, reverse the order of removal.
6. Select [Service Mode] -> [Counter] -> [Life] and clear the count of [3rd.].
   I.11.16.2 Life

9.1.2 Replacing the tray 4 feed roller, tray 4 pick-up roller, tray 4 separation roller

(1) Periodically replacing parts/cycle

- Tray 4 feed roller: Every 300,000 counts
- Tray 4 pick-up roller: Every 300,000 counts
- Tray 4 separation roller + torque limiter: Every 300,000 counts

NOTE

- **Replace the tray 4 feed roller, tray 4 pick-up roller and tray 4 separation roller at the same time.**

(2) Procedure

1. Open the right door.
2. Remove the tray 3 and tray 4.
   G.6.6.4 Tray 3, tray 4, storage box (PC-110/PC-210)

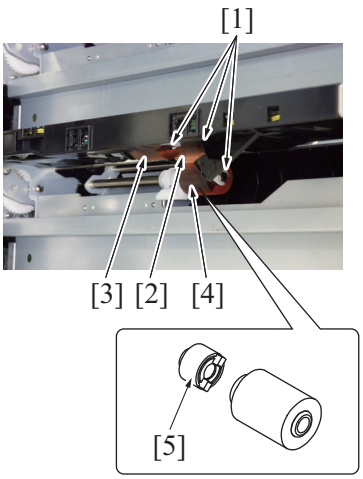

3. Remove the C-clip [1] each, and remove the tray 4 feed roller [2], tray 4 pick-up roller [3] and tray 4 separation roller [4].
   NOTE
   - **When replacing the tray 4 separation roller, replace the torque limiter [5] at the same time.**
4. To reinstall, reverse the order of removal.

5. Select [Service Mode] -> [Counter] -> [Life] and clear the count of [4th.].
I.11.16.2 Life

10. Periodical maintenance procedure PC-410

10.1 Paper feed section

10.1.1 Replacing the feed roller, pick-up roller, separation roller

(1) Periodically replacing parts/cycle

- Feed roller: Every 300,000 counts
- Pick-up roller: Every 300,000 counts
- Separation roller + torque limiter: Every 300,000 counts

NOTE

- **Replace the feed roller, pick-up roller and separation roller at the same time.**

(2) Procedure

1. Slide out the paper feed tray.
2. Remove the right door.
   G.6.7.1 Right door (PC-410)

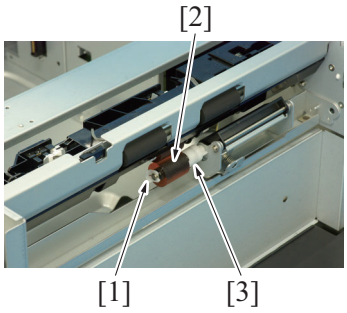

3. Remove the C-clip [1], and remove the separation roller [2].
   NOTE
   - **When replacing the separation roller, replace the torque limiter [3] at the same time.**

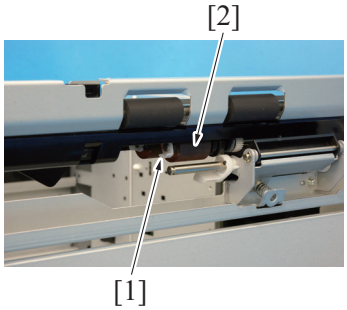

4. Remove the C-clip [1], and remove the feed roller [2].

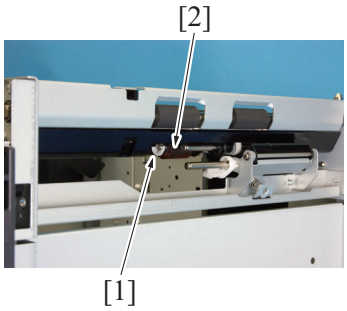

5. Remove the C-clip [1], and remove the pick-up roller [2].

6. To reinstall, reverse the order of removal.
7. Select [Service Mode] -> [Counter] -> [Life] and clear the count of [3rd.].
   I.11.16.2 Life

11. Periodical maintenance procedure FS-534

NOTE

- **The alcohol described in the cleaning procedure of maintenance represents the isopropyl alcohol.**

11.1 Paper exit section

11.1.1 Cleaning procedure for each rollers/each rolls

(1) Periodically cleaning parts/cycle

- Each rollers/Each rolls: Every 300,000 counts

(2) Cleaning point

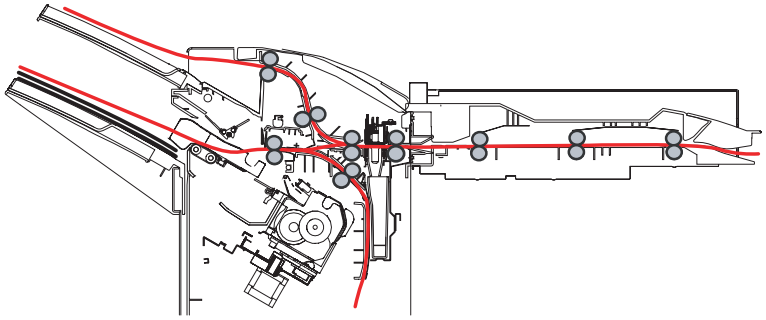

11.1.2 Cleaning the paddles

(1) Periodically cleaning parts/cycle

- Paddles: Every 300,000 counts

(2) Procedure

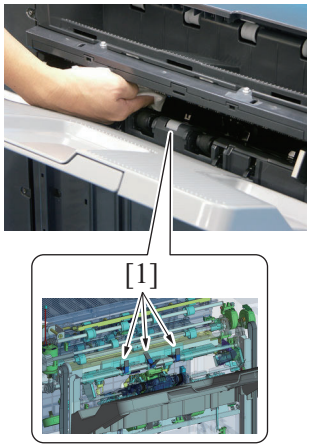

1. Using a cleaning pad dampened with alcohol, wipe the paddle [1].

11.1.3 Replacing the paddle units

(1) Periodically replacing parts/cycle

- Paddle units: Every 2,000,000 counts

(2) Procedure

1. Remove the finisher from the main body.
   G.6.9.4 Finisher (FS-534)
2. Remove the front door of the finisher.
   G.6.9.2 Front door (FS-534)
3. Remove the front upper cover of the finisher.
   G.6.9.3 Front upper cover (FS-534)
4. Remove the rear cover of the finisher.
   G.6.9.1 Rear cover (FS-534)

5. Remove the paper exit tray [1].

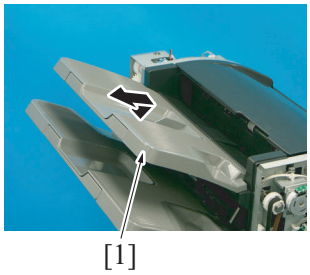

6. Remove two tabs [1], and remove the cover [2].

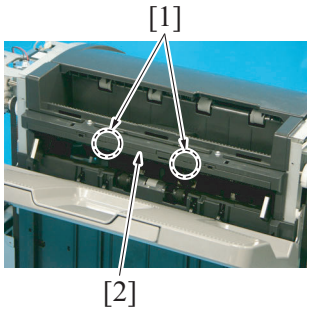

7. Release the tab [1], and remove the main tray upper position detect switch [2].

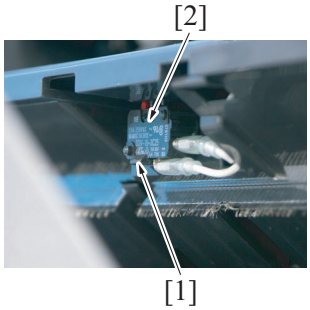

8. Remove four screws [1], and remove the cover [2].

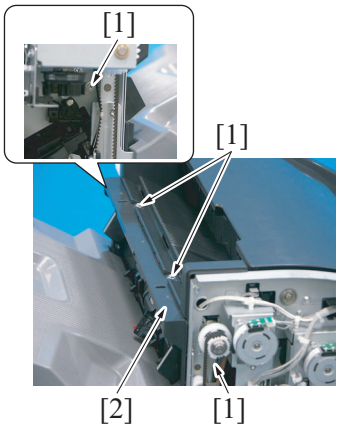

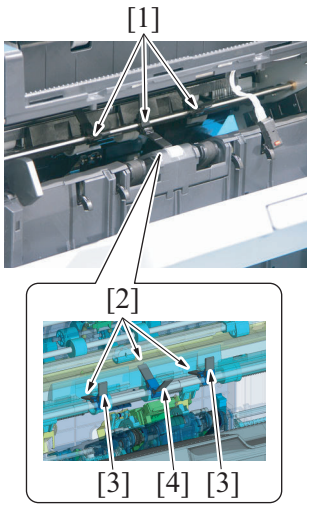

10. Reinstall the above parts following the removal steps in reverse.

9. Remove three paddle units [1].
NOTE
- **When reinstalling the paddle units, be careful not to attach them at an incorrect location or in an incorrect orientation. Length: [4] > [2] > [3]**

12. Periodical maintenance procedure SD-511

NOTE

- **The alcohol described in the cleaning procedure of maintenance represents the isopropyl alcohol.**

12.1 Paper exit section

12.1.1 Cleaning procedure for each rollers/each rolls

(1) Periodically cleaning parts/cycle

- Each rollers/Each rolls: Every 300,000 prints

(2) Cleaning point

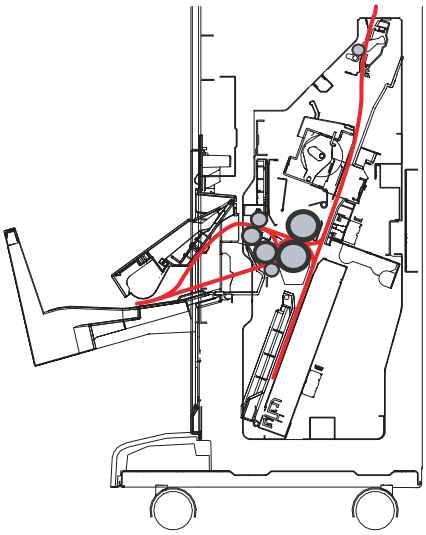

12.1.2 Cleaning the upper paddle

(1) Periodically cleaning parts/cycle

- Upper paddle: Every 300,000 counts

(2) Procedure

1. Remove the saddle unit.
   G.6.11.2 Saddle unit (SD-511)
2. Remove the front cover.
   G.6.11.1 Front cover (SD-511)

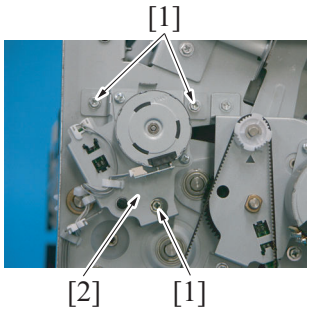

3. Remove three screws [1], and remove the tri-fold guide motor assy [2].

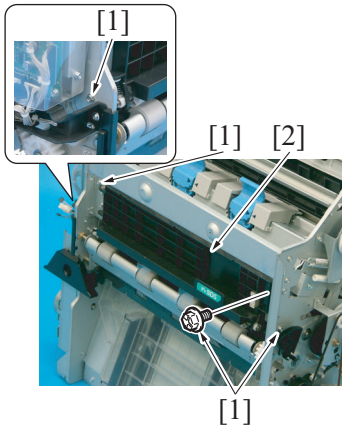

4. Remove four screws [1], and remove the conveyance assy [2].

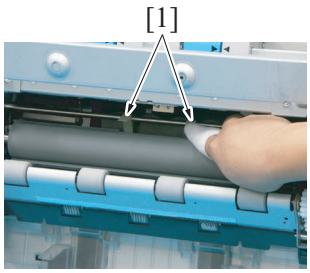

5. Using a cleaning pad dampened with alcohol, wipe the paddle [1].

12.1.3 Cleaning the lower paddle

(1) Periodically cleaning parts/cycle

- Lower paddle: Every 300,000 counts

(2) Procedure

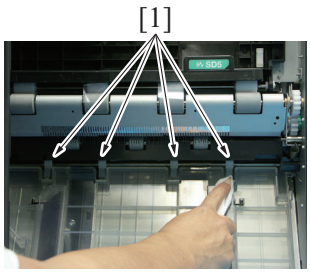

1. Using a cleaning pad dampened with alcohol, wipe the paddle [1].

12.1.4 Replacing the upper paddle assy

(1) Periodically replacing parts/cycle

- Upper paddle assy: Every 2,000,000 counts

(2) Procedure

1. Remove the saddle unit.
   G.6.11.2 Saddle unit (SD-511)
2. Remove the front cover.
   G.6.11.1 Front cover (SD-511)

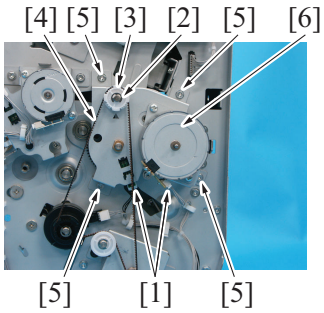

3. Disconnect two connectors [1].
4. Remove the E-ring [2].
5. Remove the gear [3] and the belt [4].
6. Remove four screws [5], and remove the center fold guide motor assy [6].

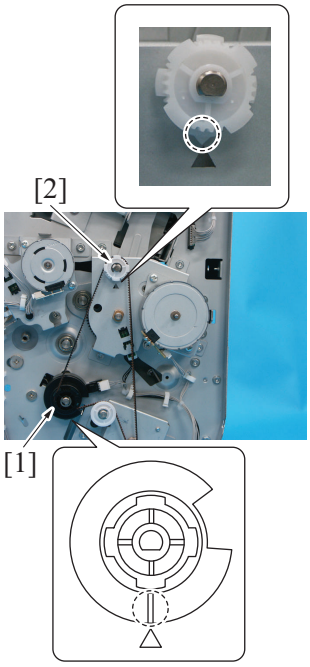

NOTE

- **When reinstalling the belt, align the portions of the gear [1] and the gear [2] indicated in the illustration with the triangular marking on the metal plate. Then, install the belt.**

7. Remove the upper paddle assy [1].

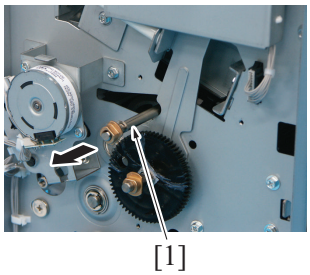

8. Remove the bushing [1].
9. Remove the E-ring [2], and remove the bushing [3].
10. Remove two E-rings [4].
11. Replace the upper paddle assy [5].

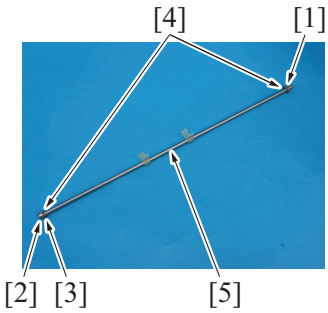

12. Reinstall the above parts following the removal steps in reverse.

12.1.5 Replacing the lower paddle unit

(1) Periodically replacing parts/cycle

- Lower paddle unit: Every 2,000,000 counts

(2) Procedure

1. Remove four lower paddle units [1].

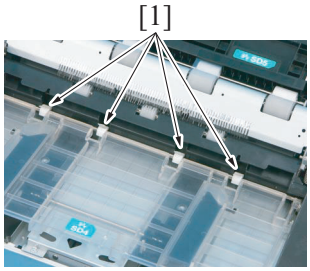

13. Periodical maintenance procedure FS-533

NOTE
- **The alcohol described in the cleaning procedure of maintenance represents the isopropyl alcohol.**

13.1 Paper exit section

13.1.1 Cleaning procedure for each parts

(1) Periodically cleaning parts/cycle

- Each rollers/Each rolls: Every 300,000 counts

(2) Cleaning point

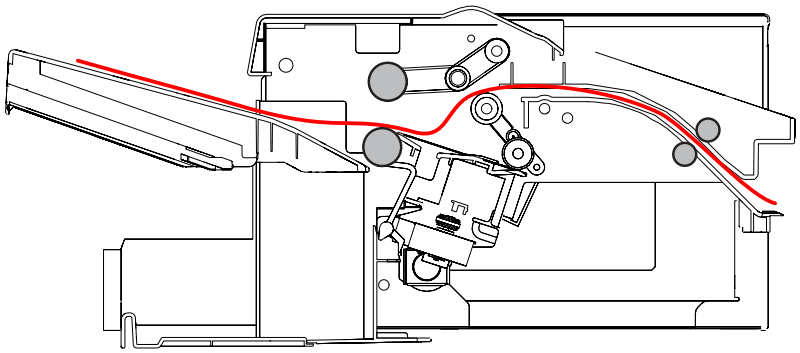

NOTE
- **Do not clean the alignment roller F/R.**

13.1.2 Cleaning the paper exit paddle

(1) Periodically cleaning parts/cycle

- Paper exit paddle: Every 300,000 counts

(2) Procedure

1. Using a cleaning pad dampened with alcohol, wipe the paper exit paddle [1].

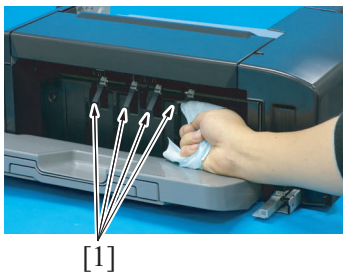

13.2 Alignment section

13.2.1 Replacing the alignment roller assy F/R

(1) Periodically replacing parts/cycle

- Alignment roller assy F/R: Every 1,000,000 counts

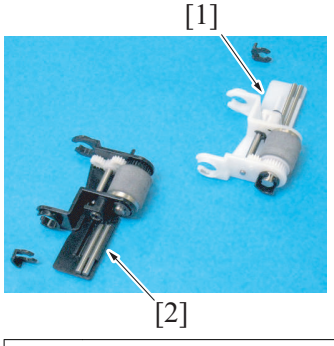

[1]	Alignment roller assy R	[2]	Alignment roller assy F

(2) Procedure

1. Remove the front cover.

G.6.12.1 Front cover (FS-533)

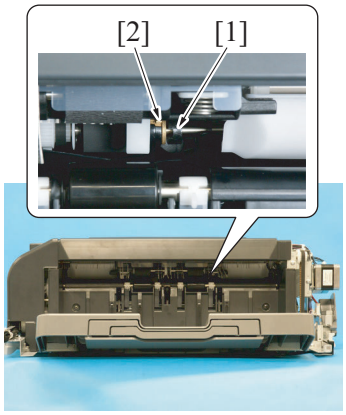

2. Remove the C-clip [1].
3. Move the bushing [2] to the right.

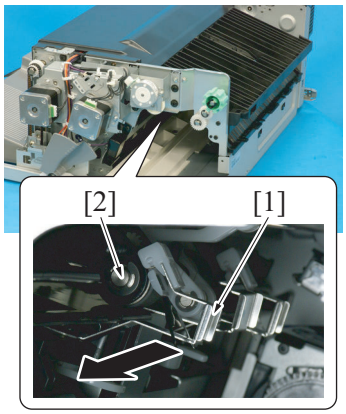

4. Pull the paper stopper [1] and remove the alignment roller assy /F [2].

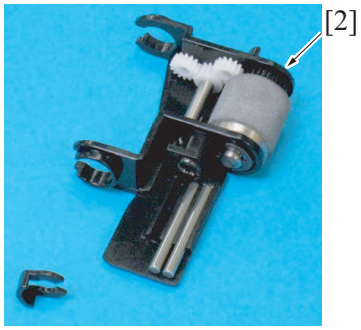

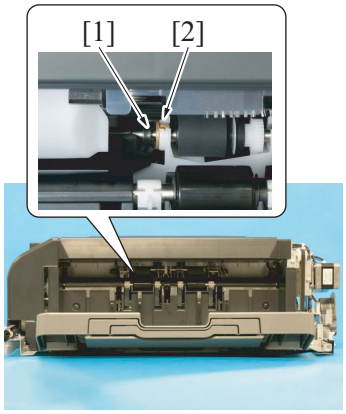

5. Remove the C-clip [1].
6. Move the bearing [2] to the left.

7. Press the paper stopper [1] to the rear and remove the alignment roller assy /R [2].

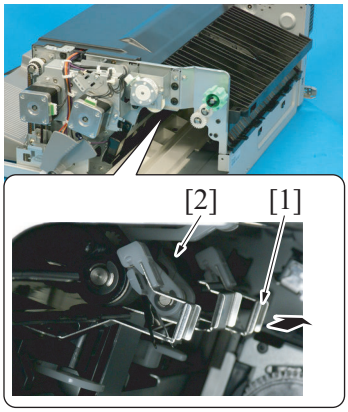

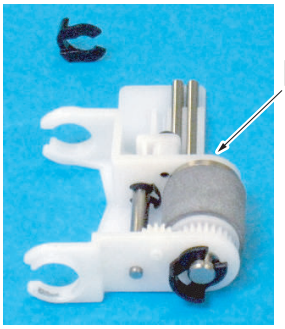

8. Reinstall the above parts following the removal steps in reverse.

G DISASSEMBLY/REASSEMBLY

1. Disassembly/adjustment prohibited items

1.1 Paint-locked screws

NOTE

- **To prevent loose screws, a screw lock in blue or green series color is applied to the screws.**
- **The screw lock is applied to the screws that may get loose due to the vibrations and loads created by the use of machine or due to the vibrations created during transportation.**
- **If the screw lock coated screws are loosened or removed, be sure to apply a screw lock after the screws are tightened.**

1.2 Red-painted screws

NOTE

- **The screws which are difficult to be adjusted in the field are painted in red in order to prevent them from being removed by mistake.**
- **Do not remove or loosen any of the red-painted screws in the field. It should also be noted that, when two or more screws are used for a single part, only one representative screw may be marked with the red paint.**

1.3 Variable resistors on board

NOTE

- **Do not turn the variable resistors on boards for which no adjusting instructions are given in Adjustment/Setting.**

1.4 Removal/installing of PWBs

⚠WARNING

- To avoid electric shock, after turning OFF the power switch, do not touch the hazards area on DC power supply unit for 180 minutes.
  If the DC power supply unit is faulty, it may take time before its voltage drops sufficiently.

⚠ CAUTION

- When removing or installing a circuit board or other electrical component, refer to “Handling of PWBs” and follow the corresponding removal or installing procedures.
- The removal procedures given in the following omit the removal of connectors and screws securing the circuit board support or circuit board.
- Where it is absolutely necessary to touch the ICs and other electrical components on the board, be sure to ground your body.

1.5 Warnings for disassembly

⚠ WARNING

- When accessing a hard-to-view or narrow spot, be careful about sharp edges and burrs on the frame and parts.

⚠ WARNING

They may injure your hands or fingers.

- If it is absolutely necessary to service the machine with the door open or external covers removed, always be attentive to the motion of the internal parts.
  A normally protected part may cause unexpected hazards.
- When removing a part that secures a motor, gear, or other moving part, disassembling a unit, or reinstalling any of such parts and units, be careful about moving parts and use care not to drop any part or unit. During the service procedure, give sufficient support for any heavy unit.
  You may be injured by a falling part or unit.

1.6 Warnings / Precautions during setup or transportation

⚠ WARNING

- Whenever mounting an option on the machine, be attentive to the motion of the other workers performing the task.
  Another worker may be injured by a pinch point between the machine and the option.
- When mounting an option on the machine, be careful about the clearance between the machine and the option.
  You may be injured with your finger or hand pinched between the machine and the option.

⚠ CAUTION

- Do not leave the machine unattended during transportation, installation, and/or inspection.
  If the machine is left unattended, face protrusions toward the wall or take other necessary precautions to prevent a user or other person in the area from stumbling over a protrusion of the machine or being caught by a cable, possibly causing a fall to the floor or other personal injury.

2. Units from which removing is prohibited

2.1 CCD unit

2.1.1 Reason for prohibition

- Since the accuracy of the CCD unit is guaranteed as a unit, no accuracy is guaranteed if it is disassembled. Therefore, screws that lead to the disassembly of the CCD unit must not be removed.

2.2 PH unit

2.2.1 Reason for prohibition

- The laser runs inside the PH unit. Opening the cover may cause dust to enter and interrupt the laser. Do no remove any screw which may disassemble the PH unit.

2.3 Fusing unit

2.3.1 Reason for prohibition

- Inner part of the fusing unit and the position of the fusing belt are adjusted prior to shipping. Do not remove any screw which may disassemble the fusing unit.

3. Disassembly/assembly warning/caution items

3.1 Removal/installing of PWBs

WARNING

- To avoid electric shock, after turning OFF the power switch, do not touch the hazards area on DC power supply unit for 180 minutes.
  If the DC power supply unit is faulty, it may take time before its voltage drops sufficiently.

CAUTION

- When removing or installing a circuit board or other electrical component, refer to “Handling of PWBs” and follow the corresponding removal or installing procedures.
- The removal procedures given in the following omit the removal of connectors and screws securing the circuit board support or circuit board.
- Where it is absolutely necessary to touch the ICs and other electrical components on the board, be sure to ground your body.

3.2 Use a special screw

- To prevent the customers from injury, the special screws are used at following positions of the machine.
- When removing and reinstalling a part or unit at following positions, make sure to use the special screws that is used to secure the part or unit.

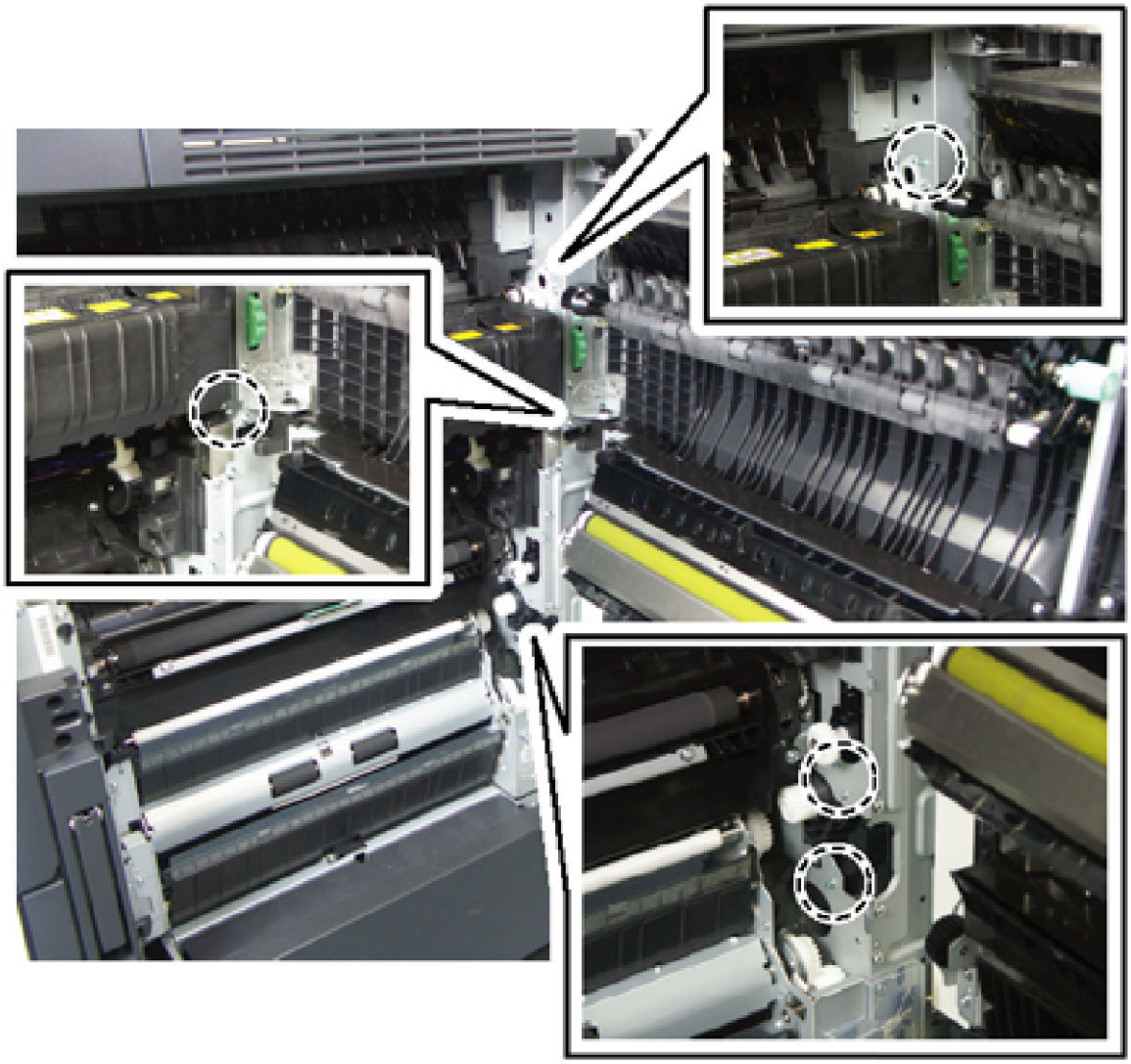

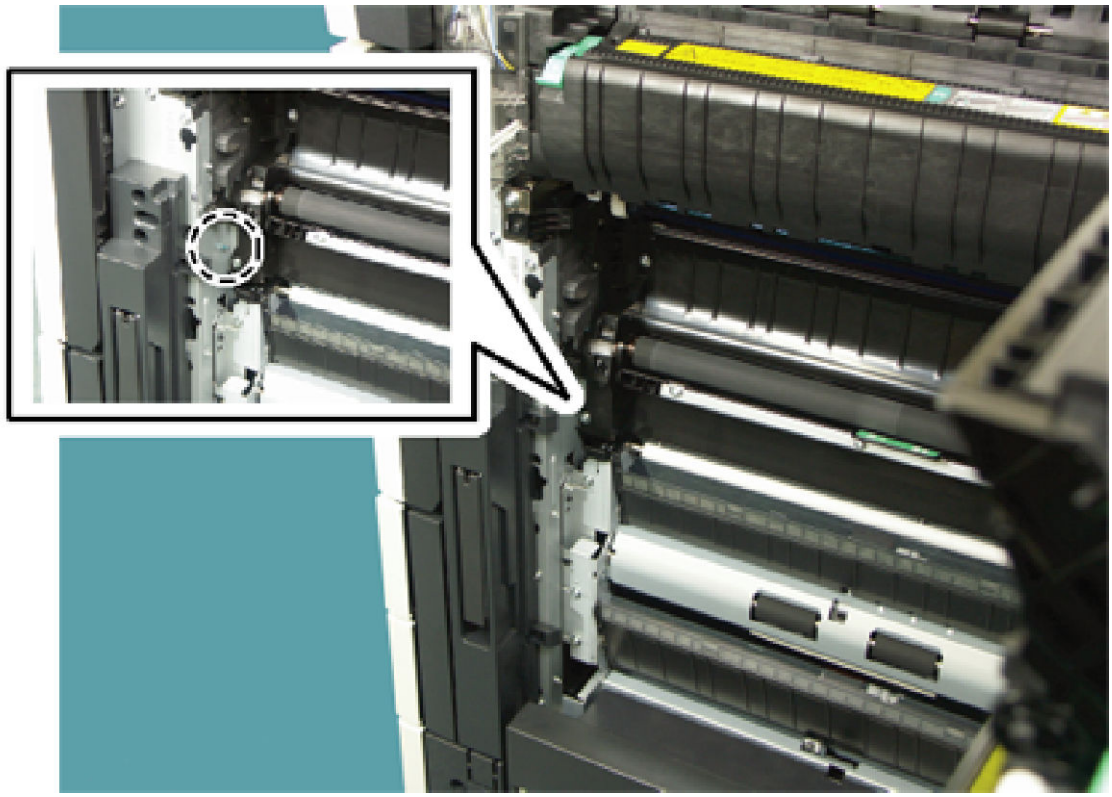

4. Notes when transporting the machine

NOTE

- **When transporting a machine to reinstall it in another location, attach the following protective materials to the machine in order to prevent the machine from being damaged or spilling out by vibration during transportation.**
- **The protective materials are removed when the machine is set up. However, be sure to keep the protective materials after finishing the set-up.**

4.1 Protective materials

4.1.1 Protective materials for the photo conductors

(1) Reinstall procedure

1. Open the front door.
2. Remove the waste toner box.
   F.6.8.1 Replacing the waste toner box

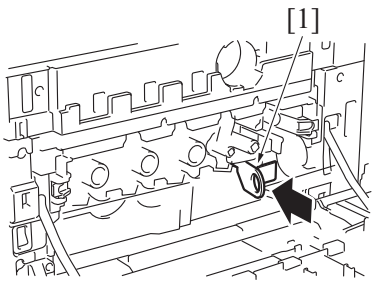

3. Insert the protective materials for the photo conductors [1] in the indicated position and push it as far as it will go.

4.1.2 Scanner packing bracket

1. Check that the exposure unit is at the home position.
2. Remove four caps.

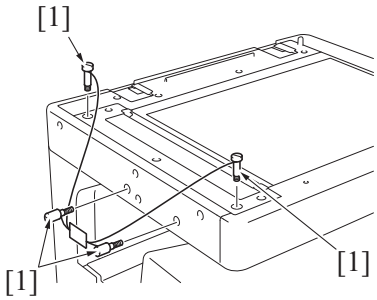

3. Attach the scanner packing brackets [1] to fix the scanner.

5. bizhub 364e/284e/224e

5.1 Disassembly/reassembly parts list

5.1.1 Exterior parts

No.	Part name	Ref. page
1	Scanner rear cover	G.5.2.1 Scanner rear cover
2	Scanner right cover	G.5.2.2 Scanner right cover
3	Scanner front cover	G.5.2.3 Scanner front cover
4	Scanner left cover	G.5.2.4 Scanner left cover
5	Scanner upper rear cover	G.5.2.5 Scanner upper rear cover
6	Control panel left cover/1	G.5.2.6 Control panel left cover/1
7	Control panel left cover/2	G.5.2.7 Control panel left cover/2
8	Control panel right cover	G.5.2.8 Control panel right cover
9	Control panel upper cover	G.5.2.9 Control panel upper cover
10	Control panel front cover	G.5.2.10 Control panel front cover
11	Control panel unit	G.5.2.11 Control panel unit
12	Original glass	G.5.2.12 Original glass
13	Front door	G.5.2.13 Front door
14	Lower front cover	G.5.2.14 Lower front cover
15	Front cover	G.5.2.15 Front cover
16	Left cover	G.5.2.16 Left cover
17	Exit tray	G.5.2.17 Exit tray
18	Rear right cover	G.5.2.18 Rear right cover
19	Upper right cover	G.5.2.19 Upper right cover
20	Lower rear cover/1	G.5.2.20 Lower rear cover/1
21	Lower rear cover/2	G.5.2.21 Lower rear cover/2
22	Upper rear cover	G.5.2.22 Upper rear cover
23	Tray 1	G.5.2.23 Tray 1
24	Tray 2	G.5.2.24 Tray 2

5.1.2 Units

No.	Part name	Ref. page
1	LED exposure unit	G.5.3.1 LED exposure unit
2	Paper feed unit	G.5.3.2 Paper feed unit
3	PH unit	G.5.3.3 PH unit
4	Sub hopper unit	G.5.3.4 Sub hopper unit
5	Right door unit	G.5.3.5 Right door unit
6	Manual bypass tray unit	G.5.3.6 Manual bypass tray unit
7	Regist unit	G.5.3.7 Regist unit
8	Hard disk	G.5.3.8 Hard disk
9	How to open the PWB box	G.5.3.9 How to open the PWB box
10	Main drive unit	G.5.3.10 Main drive unit
11	Transport unit	G.5.3.11 Transport unit
12	Fusing drive unit	G.5.3.12 Fusing drive unit
13	Hopper drive unit	G.5.3.13 Hopper drive unit

5.1.3 Boards

No.	Part name	Ref. page
1	CCD board (CCDB)	G.5.4.1 CCD board (CCDB)
2	Scanner drive board (SCDB)	G.5.4.2 Scanner drive board (SCDB)
3	LED board (LEDB)	G.5.4.3 LED board (LEDB)
4	LED control board (LEDCB)	G.5.4.4 LED control board (LEDCB)
5	USB board (USBB)	G.5.4.5 USB board (USBB)
6	Front side board (FRB)	G.5.4.6 Front side board (FRB)
7	DC power supply (DCPU)	G.5.4.7 DC power supply (DCPU)
8	PH relay board (PHRYB)	G.5.4.8 PH relay board (PHRYB)
9	Printer control board (PRCB)	G.5.4.9 Printer control board (PRCB)
10	SSD board (SSDB)	G.5.4.10 SSD board (SSDB)
11	Memory board/1 (MEMB/1)	G.5.4.11 Memory board/1 (MEMB/1)

No.	Part name	Ref. page
12	MFP board (MFPB)	G.5.4.12 MFP board (MFPB)
13	High voltage unit (HV)	G.5.4.13 High voltage unit (HV)
14	ERP board (ERPB)	G.5.4.14 ERP board (ERPB)
15	Tray 1 FD paper size board (FDPSB/1), tray 2 FD paper size board (FDPSB/2)	G.5.4.15 Tray 1 FD paper size board (FDPSB/1), tray 2 FD paper size board (FDPSB/2)
16	Tray 1 CD paper size board (CDPSB/1), tray 2 CD paper size board (CDPSB/2)	G.5.4.16 Tray 1 CD paper size board (CDPSB/1), tray 2 CD paper size board (CDPSB/2)
17	Tray 1 empty indicator board (PEIB/1), tray 2 empty indicator board (PEIB/2)	G.5.4.17 Tray 1 empty indicator board (PEIB/1), tray 2 empty indicator board (PEIB/2)

5.1.4 Motors

No.	Part name	Ref. page
1	Scanner motor (M201)	G.5.5.1 Scanner motor (M201)
2	ADU transport motor (M5)	G.5.5.2 ADU transport motor (M5)
3	Toner bottle motor (M10)	G.5.5.3 Toner bottle motor (M10)
4	Toner supply motor/K (M6)	G.5.5.4 Toner supply motor/K (M6)
5	Transport motor (M1)	G.5.5.5 Transport motor (M1)
6	Fusing motor (M3)	G.5.5.6 Fusing motor (M3)
7	Fusing pressure motor (M11)	G.5.5.7 Fusing pressure motor (M11)
8	Reverse motor (M4)	G.5.5.8 Reverse motor (M4)
9	Tray1 lift-up motor (M12)	G.5.5.9 Tray 1 lift-up motor (M12)
10	Tray2 lift-up motor (M13)	G.5.5.10 Tray 2 lift-up motor (M13)

5.1.5 Clutches

No.	Part name	Ref. page
1	Tray 1 paper feed clutch (CL3)	G.5.6.1 Tray 1 paper feed clutch (CL3)
2	Tray 2 vertical transport clutch (CL2)	G.5.6.2 Tray 2 vertical transport clutch (CL2)
3	Tray 2 paper feed clutch (CL1)	G.5.6.3 Tray 2 paper feed clutch (CL1)
4	Bypass paper feed clutch (CL7)	G.5.6.4 Bypass paper feed clutch (CL7)
5	ADU transport clutch (CL6)	G.5.6.5 ADU transport clutch (CL6)
6	Registration clutch (CL4)	G.5.6.6 Registration clutch (CL4)
7	Paper exit clutch (CL8)	G.5.6.7 Paper exit clutch (CL8)

5.1.6 etc.

No.	Part name	Ref. page
1	IDC sensor shutter solenoid (SD2)	G.5.7.1 IDC sensor shutter solenoid (SD2)
2	Gate switch solenoid (SD3)	G.5.7.2 Gate switch solenoid (SD3)
3	Developing solenoid (SD4)	G.5.7.3 Developing solenoid (SD4)
4	Bypass pick-up solenoid (SD1)	G.5.7.4 Bypass pick-up solenoid (SD1)
5	Bypass CD paper size VR (VR1)	G.5.7.5 Bypass CD paper size VR (VR1)
6	transfer belt cleaner cooling fan (FM2)	G.5.7.6 Transfer belt cleaner cooling fan assy

5.2 Disassembly/reassembly procedure (Exterior parts)

5.2.1 Scanner rear cover

1. Remove the scanner left cover.
   G.5.2.4 Scanner left cover

2. Remove two screws [1], and remove the scanner rear cover [2].

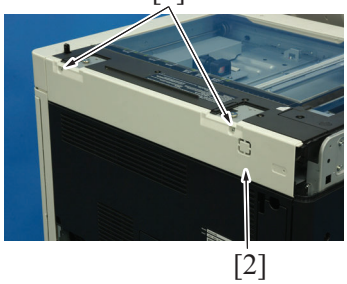

3. To reinstall, reverse the order of removal.

5.2.2 Scanner right cover

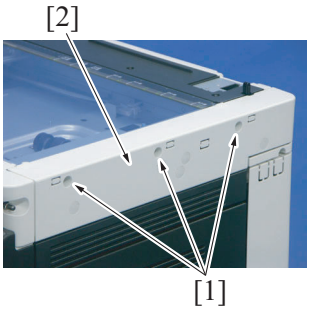

1. Remove three screws [1], and remove the scanner right cover [2].
2. To reinstall, reverse the order of removal.

5.2.3 Scanner front cover

1. Remove the scanner left cover.
   G.5.2.4 Scanner left cover
2. Remove the control panel upper cover.
   G.5.2.9 Control panel upper cover

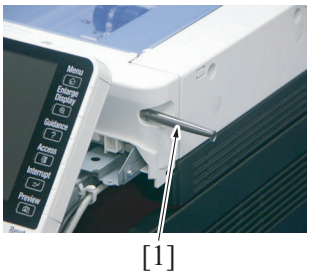

3. Remove the stylus pen [1].

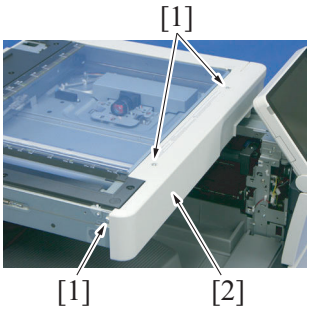

4. Remove three screws [1], and remove the scanner front cover [2].
5. To reinstall, reverse the order of removal.

5.2.4 Scanner left cover

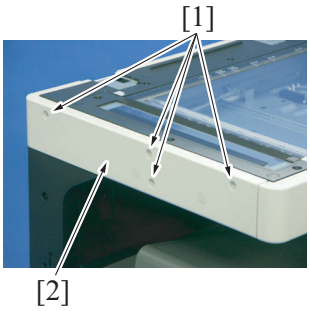

1. Remove four screws [1], and remove the scanner left cover [2].
2. To reinstall, reverse the order of removal.

5.2.5 Scanner upper rear cover

1. Remove the scanner rear cover.
   G.5.2.1 Scanner rear cover

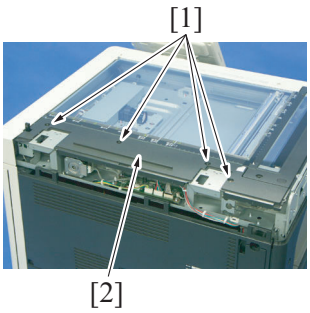

2. Remove four screws [1], and remove the scanner upper rear cover [2].

3. To reinstall, reverse the order of removal.

5.2.6 Control panel left cover/1

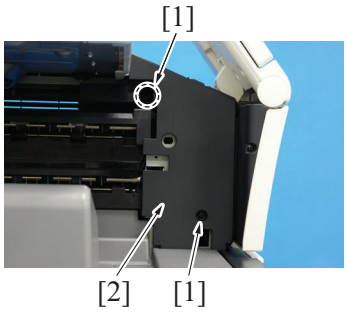

1. Remove two screws [1], and remove the control panel left cover/1 [2].

2. To reinstall, reverse the order of removal.

5.2.7 Control panel left cover/2

1. Remove the control panel left cover/1.
G.5.2.6 Control panel left cover/1

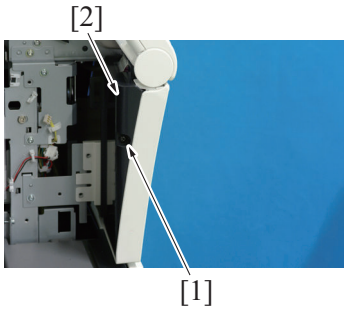

2. Remove the screw [1], and remove the control panel left cover/2 [2].

3. To reinstall, reverse the order of removal.

5.2.8 Control panel right cover

1. Open the right door.

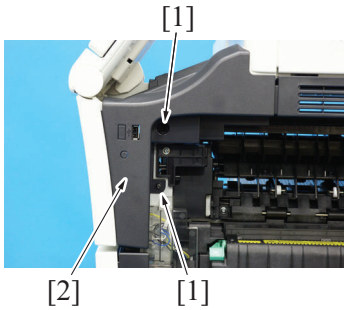

2. Remove two screws [1], and remove the control panel right cover [2].

3. To reinstall, reverse the order of removal.

5.2.9 Control panel upper cover

1. Remove the control panel left cover/1.
G.5.2.6 Control panel left cover/1
2. Remove the control panel right cover.
G.5.2.8 Control panel right cover



3. Remove two screws [1], and remove the control panel upper cover [2].

4. To reinstall, reverse the order of removal.

5.2.10 Control panel front cover

1. Remove the control panel left cover/1.
   G.5.2.6 Control panel left cover/1
2. Remove the control panel left cover/2.
   G.5.2.7 Control panel left cover/2
3. Remove the control panel right cover.
   G.5.2.8 Control panel right cover

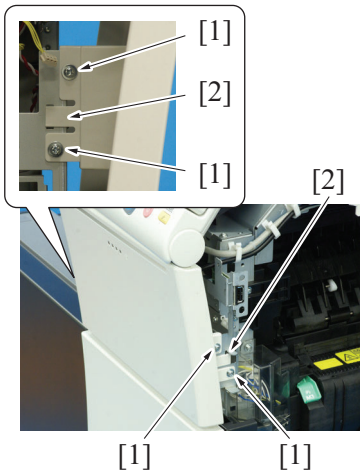

4. Remove four screws [1] and two tabs [2] of the control panel front cover.

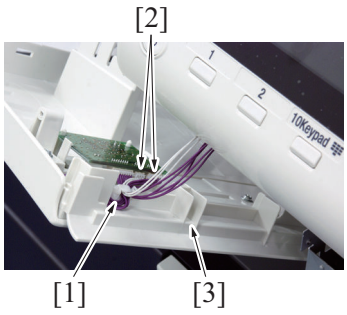

5. Remove the harness from the wire saddle [1].
6. Disconnect two connectors [2], and remove the control panel front cover assy [3].

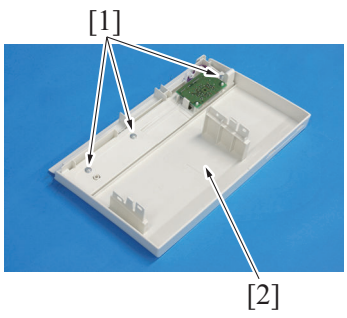

7. Remove three screws [1], and remove the control panel front cover [2].

8. To reinstall, reverse the order of removal.

5.2.11 Control panel unit

1. Remove the control panel left cover/1.
   G.5.2.6 Control panel left cover/1
2. Remove the control panel left cover/2.
   G.5.2.7 Control panel left cover/2
3. Remove the control panel right cover.
   G.5.2.8 Control panel right cover
4. Remove the control panel upper cover.
   G.5.2.9 Control panel upper cover
5. Remove the control panel front cover.
   G.5.2.10 Control panel front cover

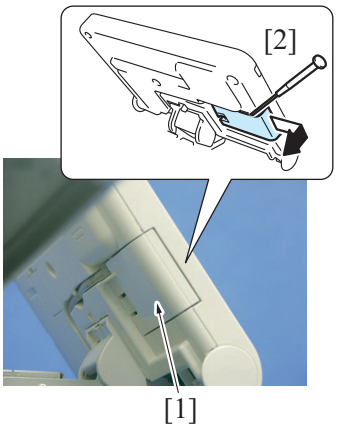

6. Insert a flathead screwdriver to unhook the tab as shown in the illustration [2], and remove the connector cover [1] from control panel.

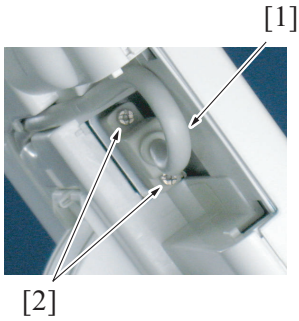

7. Loosen two screws [2], and disconnect the connector [1].

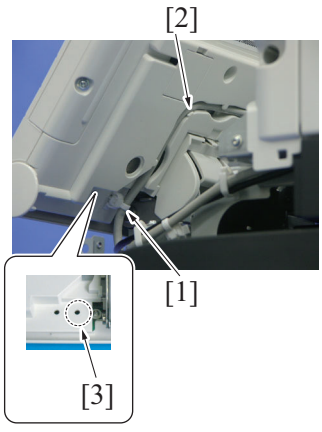

8. Remove the cable tie [1] from the control panel.
9. Remove the cable from the cable guide [2].

NOTE

- **At installation of the control panel unit, insert the cable tie [1] to the hole [3] shown in the illustration.**

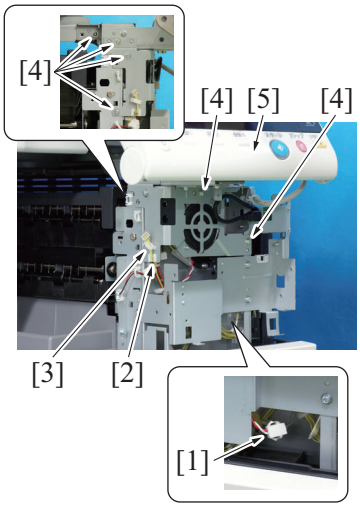

10. Disconnect the connector [1].
11. Remove the harness from the edge cover [2] and the wire saddle [3].
12. Remove six screws [4], and remove the control panel unit [5].

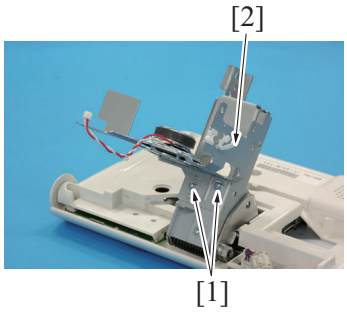

13. Remove two screws [1], and remove the speaker cover [2].

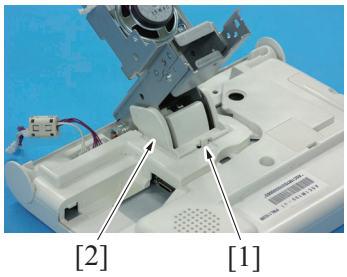

14. Unhook the claw [1], and remove the hinge cover [2].

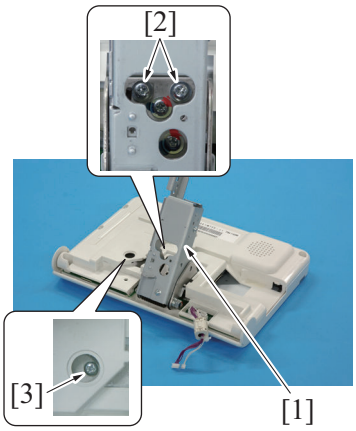

15. Tilt down the hinge [1], and remove two screws [2].
16. Remove the screw [3], and remove the hinge [1].

17. To reinstall, reverse the order of removal.
18. Carry out the touch panel calibration.
G.5.2.11.(1) Touch panel calibration
19. Carry out the [Accessiblity] -> [Touch Panel Adjustment].

(1) Touch panel calibration

- After replacing the control panel unit, you must perform the touch panel calibration. Perform one of the calibration procedures described below.

(a) Panel Calibration by using USB memory

1. Connect the USB memory containing the MFP firmware data to the service port.
   For information on how to store the firmware data into a USB memory, refer to "J.2. USB memory".
2. While pressing the 'Reset' key, turn the main power switch ON.
3. As the calibration screen appears, press the Start key, perform calibration and wait for a while.
4. Confirm that the completion message. Touch [Close].
5. Turn OFF the main power switch, and remove the USB memory.

NOTE

- **Once the panel calibration has been completed, panel screen transit to the firmware writing mode and start to update automatically after 30 seconds.**

(b) Panel Calibration by manual operation

1. Press [Menu] -> [Counter] -> [Display Keypad].
2. Press Stop -> Clear -> 1 -> 1 -> 6 -> 6 -> Start key, then calibration starts.
3. After 30 seconds, turn OFF the main power switch.

5.2.12 Original glass

1. Remove the scanner right cover.
   G.5.2.2 Scanner right cover

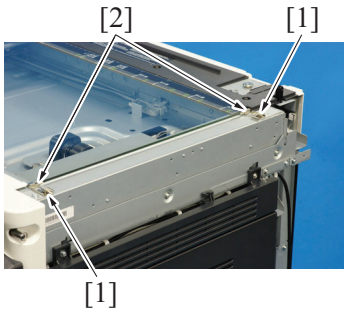

2. Remove the screw [1] each, and remove two original glass fixing brackets [2].

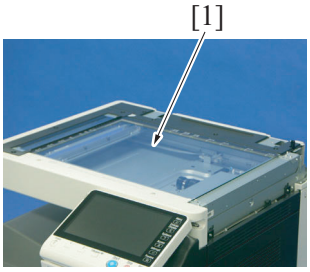

3. Remove the original glass [1].

4. To reinstall, reverse the order of removal.
5. Carry out the [Service Mode] -> [Machine] -> [Scan Area] -> [Scanner Image Side Edge].
6. Carry out the [Service Mode] -> [Machine] -> [Scan Area] -> [Image Position: Leading Edge].

5.2.13 Front door

1. Open the front door.

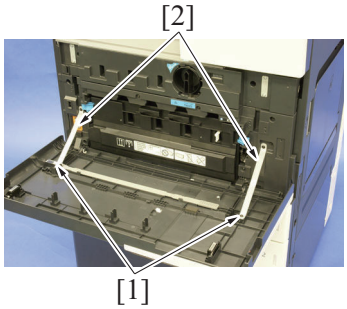

2. Remove two screws [1], and remove two stoppers [2].

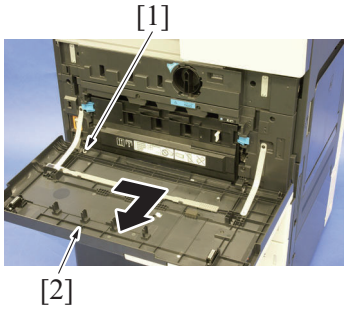

3. Remove the C-clip [1], and remove the front door [2].

4. To reinstall, reverse the order of removal.

5.2.14 Lower front cover

1. Remove the waste toner box.
   F.6.8.1 Replacing the waste toner box

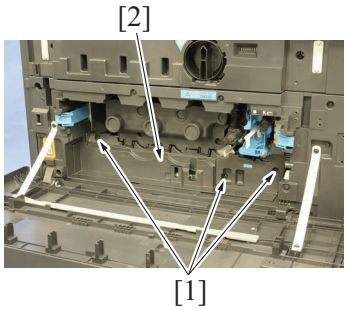

2. Remove three screws [1], and remove the lower front cover [2].

3. To reinstall, reverse the order of removal.

5.2.15 Front cover

1. Remove the front door.
   G.5.2.13 Front door
2. Remove the lower front cover.
   G.5.2.14 Lower front cover

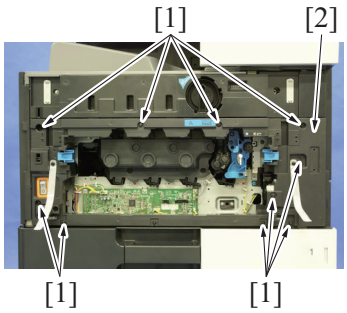

3. Remove 11 screws [1], and remove the front cover [2].

4. To reinstall, reverse the order of removal.

5.2.16 Left cover

1. Open the front door.

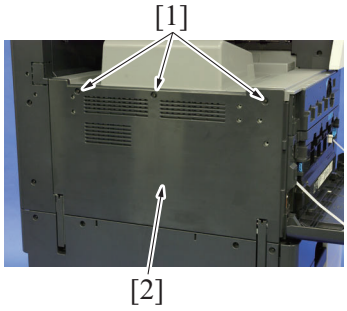

2. Remove three screws [1], and remove the left cover [2].

3. To reinstall, reverse the order of removal.

5.2.17 Exit tray

1. Open the front door.

2. Remove the left cover.
G.5.2.16 Left cover

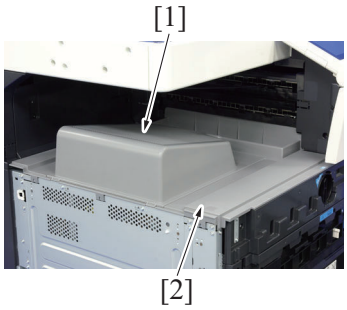

3. Remove the exit tray/1 [1].
4. Remove the exit tray/2 [2].

5. To reinstall, reverse the order of removal.

5.2.18 Rear right cover

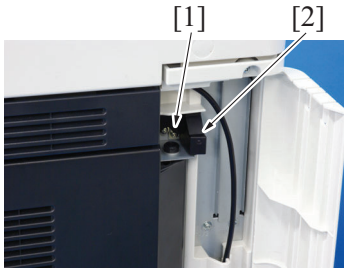

1. Remove the screw [1], and remove the right door stopper (upper section) [2].

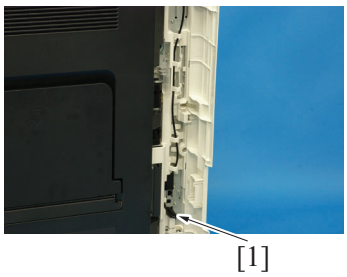

2. Disconnect the connector [1], and remove the harness from the harness guide.

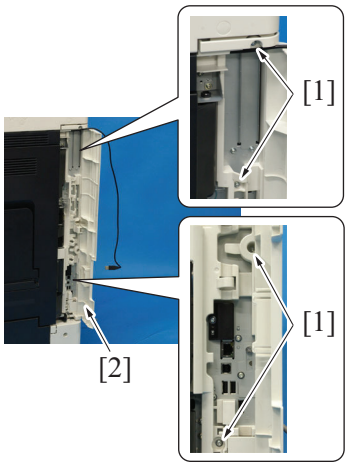

3. Remove four screws [1], and remove the rear right cover [2].

4. To reinstall, reverse the order of removal.

5.2.19 Upper right cover

1. Remove the scanner right cover.
G.5.2.2 Scanner right cover

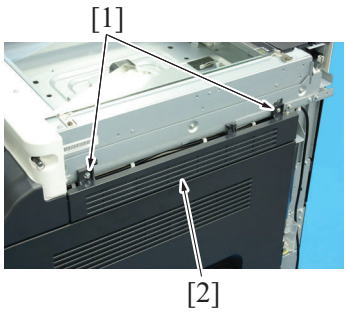

2. Remove two screws [1], and remove the upper right cover [2].

3. To reinstall, reverse the order of removal.

5.2.20 Lower rear cover/1

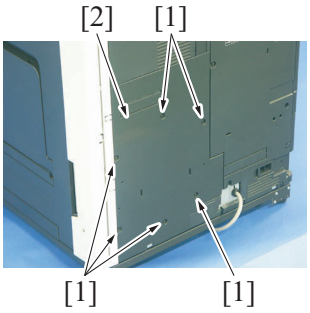

1. Remove six screws [1], and remove the lower rear cover/1 [2].

2. To reinstall, reverse the order of removal.

5.2.21 Lower rear cover/2

1. Remove the lower rear cover/1.
   G.5.2.20 Lower rear cover/1
2. Remove the ozone filter.
   F.6.1.1 Replacing the ozone filter

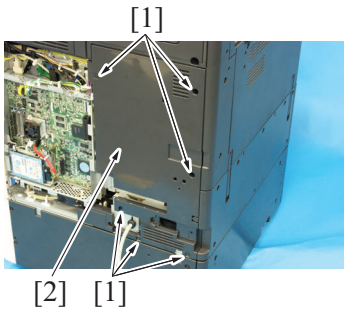

3. Remove six screws [1], and remove the lower rear cover/2 [2].

4. To reinstall, reverse the order of removal.

5.2.22 Upper rear cover

1. Remove the lower rear cover/1.
   G.5.2.20 Lower rear cover/1
2. Remove the lower rear cover/2.
   G.5.2.21 Lower rear cover/2
3. Remove the scanner rear cover.
   G.5.2.1 Scanner rear cover

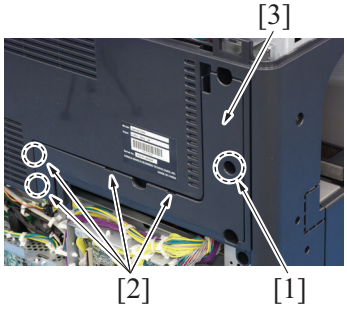

4. Remove the screw [1] and four tabs [2], and remove the DF cable cover [3].

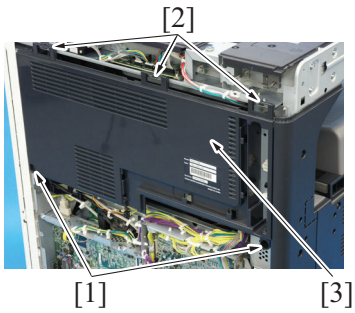

5. Remove two screws [1] and three tabs [2], and remove the upper rear cover [3].

6. To reinstall, reverse the order of removal.

5.2.23 Tray 1

1. Slide out the tray 1.

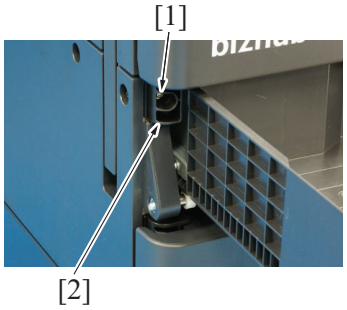

2. Remove the screw [1], and remove the stopper [2].

3. Hold up the tray 1 [1] to remove it.

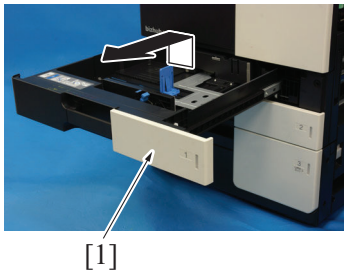

4. To reinstall, reverse the order of removal.

5.2.24 Tray 2

1. Slide out the tray 2.

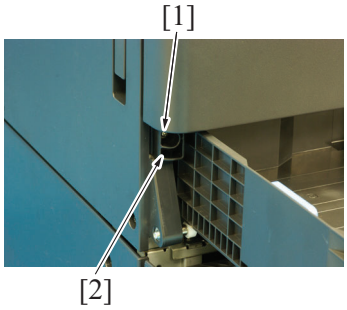

2. Remove the screw [1], and remove the stopper [2].

3. Hold up the tray 2 [1] to remove it.

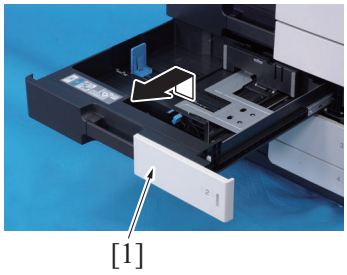

4. To reinstall, reverse the order of removal.

5.3 Disassembly/reassembly procedure (Units)

5.3.1 LED exposure unit

1. Remove the original glass.
   G.5.2.12 Original glass

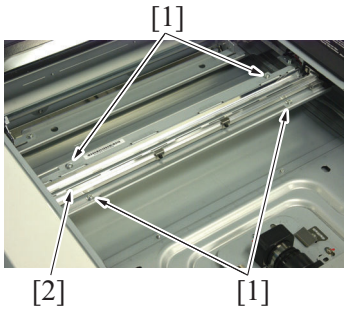

2. Remove four screws [1] of the LED exposure unit [2].

3. Disconnect the flat cable [1], and remove the LED exposure unit [2].

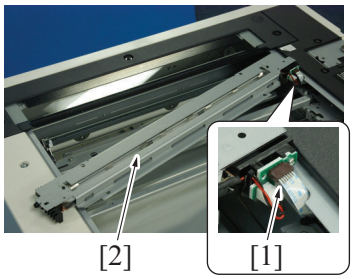

4. To reinstall, reverse the order of removal.
   NOTE
   - **When replacing the LED exposure unit with a brand-new one, peel the protective film from the unit after attaching it.**

5.3.2 Paper feed unit

1. Slide out the tray 1 and tray 2.

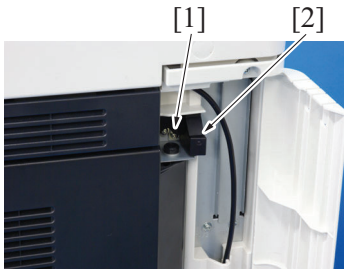

2. Remove the screw [1], and remove the right door stopper (upper section) [2].

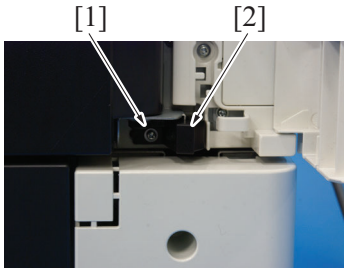

3. Remove the screw [1], and remove the right door stopper (lower section) [2].

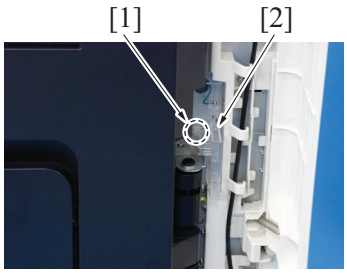

4. Remove the screw [1], and remove the connector cover [2].

5. Open the right door and the regist unit.

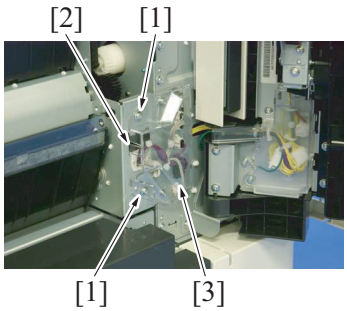

6. Remove two screws [1] and the tab [2], and remove the connector cover [3].

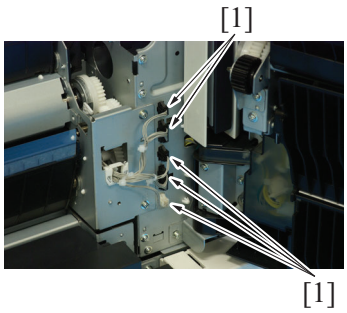

7. Disconnect five connectors [1].

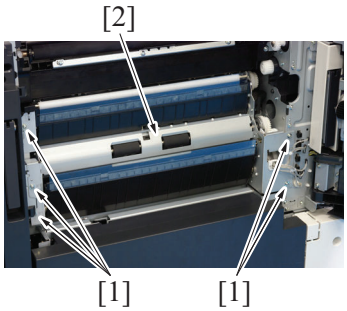

8. Remove five screws [1], and remove the paper feed unit [2].

9. To reinstall, reverse the order of removal.

5.3.3 PH unit

CAUTION

- Do not supply power with the write unit (PH unit) shifted from the specified mounting position.
  The laser light can enter your eye, leading to a risk of loss of eyesight.

CAUTION

- Do not disassemble or adjust the write unit (PH unit) incorporating a laser.
  The laser light can enter your eye, leading to a risk of loss of eyesight.

(1) Removal procedure

1. Remove the lower front cover.
   G.5.2.14 Lower front cover
2. Remove the DC power supply.
   G.5.4.7 DC power supply (DCPU)
3. Remove the PH relay board assy.
   G.5.4.8 PH relay board (PHRYB)

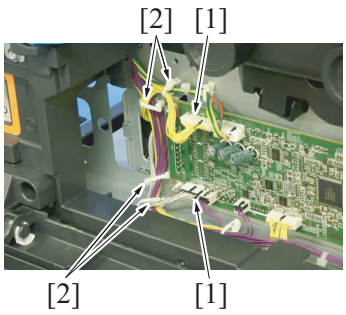

4. Disconnect two connectors [1] on the front side board, and remove the harness from four wire saddles [2].

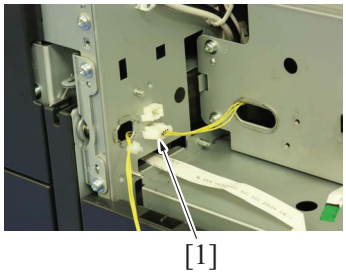

5. Disconnect the connector [1].

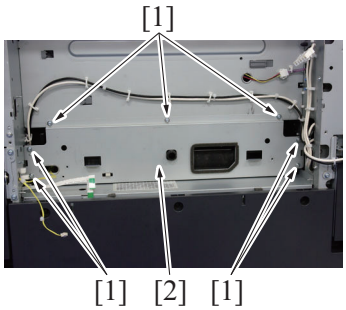

6. Remove seven screws [1], and remove the metal plate [2].

7. Remove two screws [1], and remove the set pin [2] for the PH unit.

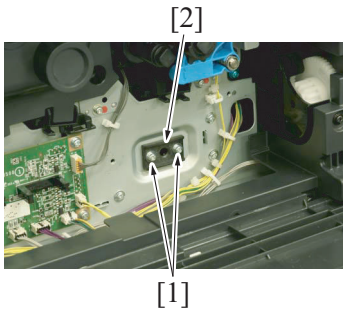

8. Remove the PH unit [1].

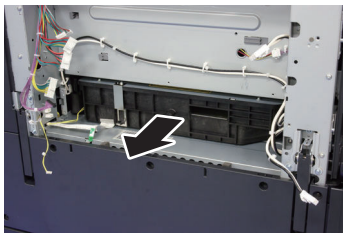

9. To reinstall, reverse the order of removal.
10. Carry out the [Service Mode] -> [Machine] -> [Printer Area] -> [Leading Edge Adjustment].
11. Carry out the [Service Mode] -> [Machine] -> [Printer Area] -> [Printer Image Centering Side 1].

5.3.4 Sub hopper unit

1. Remove the front cover.
   G.5.2.15 Front cover
2. Remove the toner cartridge.
   F.6.5.1 Replacing the toner cartridge
3. Rmove the drum unit.
   F.6.2.1 Replacing the drum unit
4. Remove the developing unit.
   F.6.4.1 Replacing the developing unit
5. Remove the exit tray.
   G.5.2.17 Exit tray

6. Remove four screws [1] of the sub hopper unit.

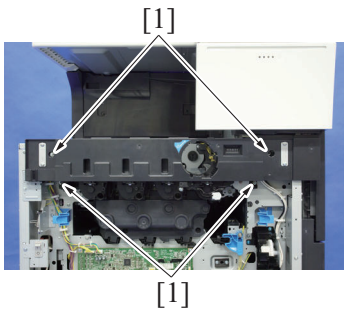

7. Disconnect two connectors [1], and remove the harness from the wire saddle [2].
8. Remove the sub hopper unit [3].

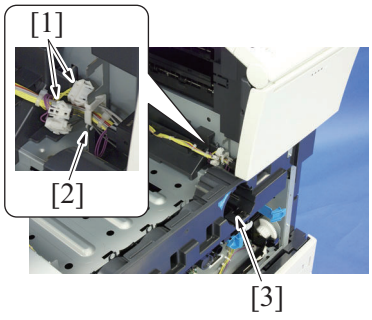

9. To reinstall, reverse the order of removal.

5.3.5 Right door unit

1. Remove the rear right cover.
   G.5.2.18 Rear right cover

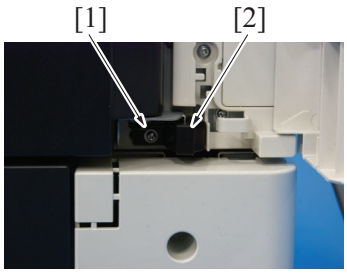

2. Remove the screw [1], and remove the right door stopper (lower section) [2].

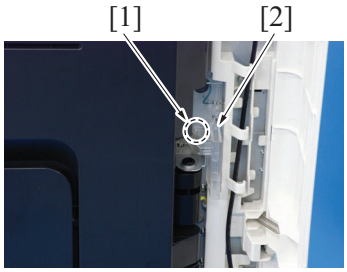

3. Remove the screw [1], and remove the connector cover [2].

4. Open the right door.

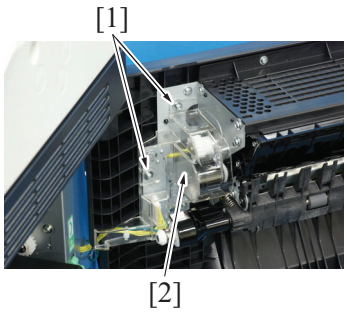

5. Remove two screws [1], and remove the connector cover/1 [2].

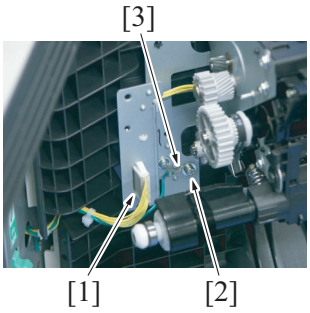

6. Disconnect the connector [1].
7. Remove the screw [2], and remove the ground terminal [3].

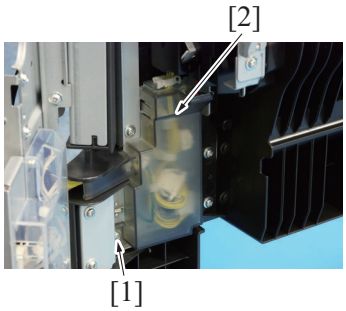

8. Remove the screw [1], and remove the connector cover/2 [2].

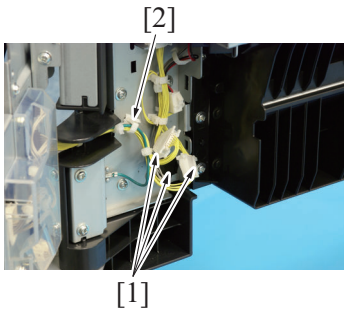

9. Disconnect three connectors [1], and remove the harness from the wire saddle [2].

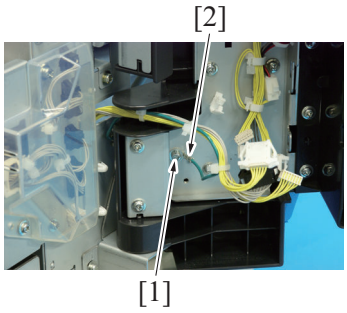

10. Remove the screw [1], and remove the ground terminal [2].

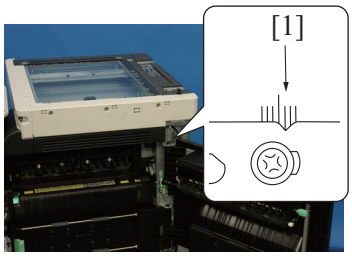

11. Draw the gauge line to the hinge mounting part [1] along the cutout of the hinge on the frame of the main body.

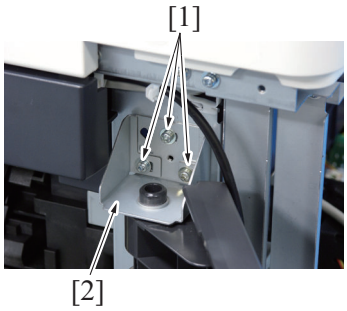

12. Remove three screws [1], and remove the hinge (upper section) [2].

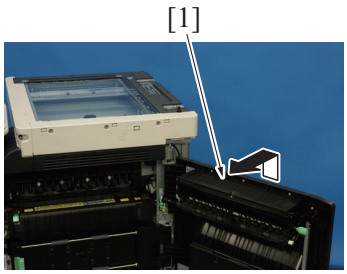

13. Hold up the right door unit [1] to remove it.

14. To reinstall, reverse the order of removal.
NOTE
- **When installing the right door unit, align it with the guide lines drawn on the scales indicated on the machine frame. Open and close the right door to check for any interference and correct if necessary.**

5.3.6 Manual bypass tray unit

1. Remove the right door unit.
G.5.3.5 Right door unit

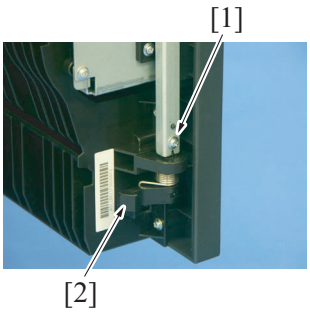

2. Remove the screw [1], and remove the shaft holder/1 [2].

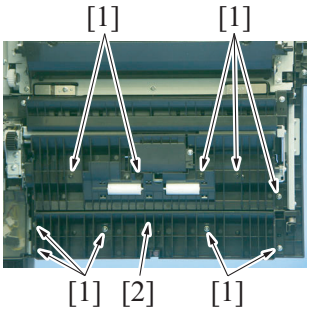

3. Remove 10 screws [1], and remove the vertical transport roll assy [2].

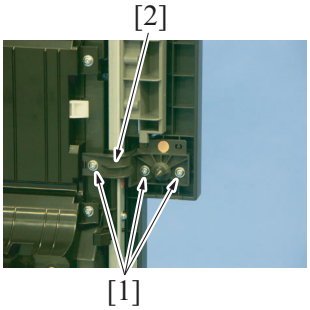

4. Remove three screws [1], and remove the shaft holder/2 [2].

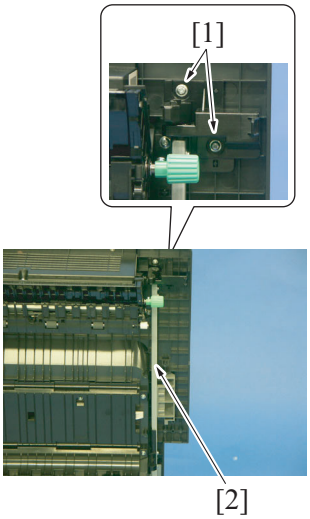

5. Remove two screws [1], and remove the right door lever assy [2].

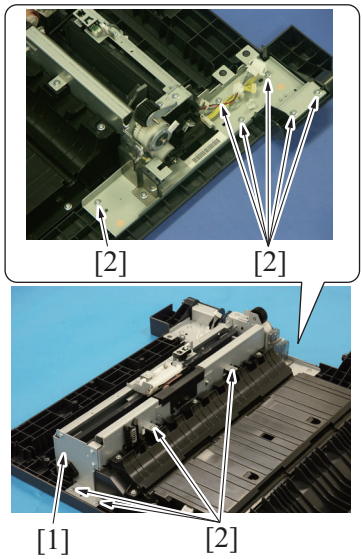

6. Remove 10 screws [2] of the manual bypass tray unit [1].

7. Remove the manual bypass tray unit [1].

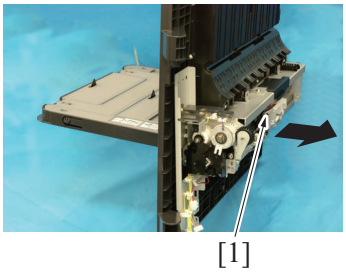

8. To reinstall, reverse the order of removal.

5.3.7 Regist unit

1. Remove the right door unit.
G.5.3.5 Right door unit

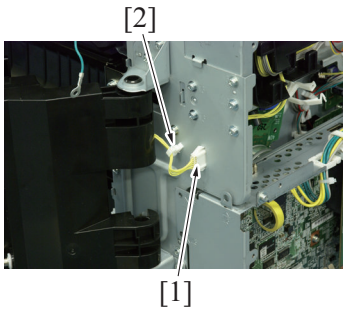

2. Disconnect the connector [1], and remove the harness from the wire saddle [2].

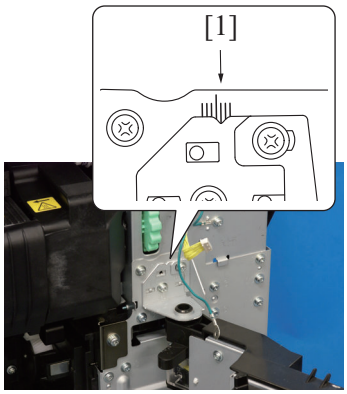

3. Draw the gauge line to the hinge mounting part [1] along the cutout of the hinge on the frame of the main body.

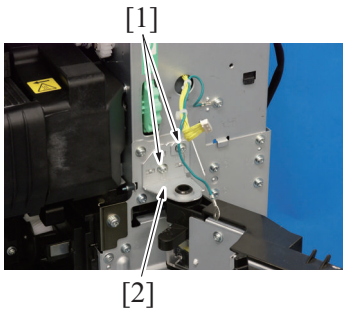

4. Remove two screws [1], and remove the hinge [2].

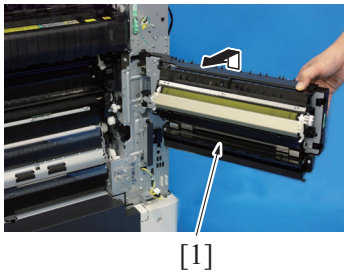

5. Hold up the regist unit [1] to remove it.

6. To reinstall, reverse the order of removal.

5.3.8 Hard disk

1. Remove the lower rear cover/1.
G.5.2.20 Lower rear cover/1

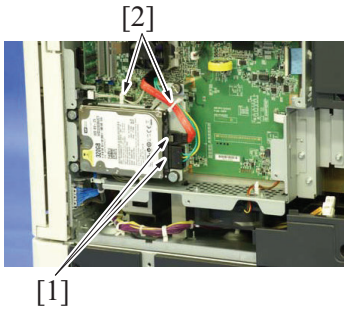

2. Disconnect two connectors [1].
3. Remove the harness from two wire saddles [2].

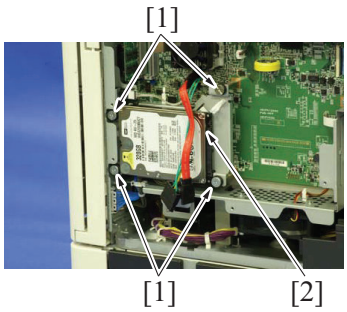

4. Remove four screws [1], and remove the hard disk assy [2].

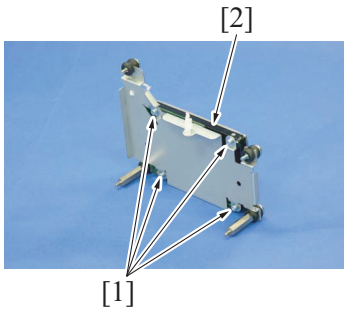

5. Remove four screws [1], and remove the hard disk [2].

6. To reinstall, reverse the order of removal.
7. Carry out the [Service Mode] -> [State Confirmation] -> [Memory/HDD Adj.] -> [HDD Format] for logical format.

8. Carry out the [Service Mode] -> [State Confirmation] -> [Memory/HDD Adj.] -> [HDD R/W Check] and check the HDD operations.

5.3.9 How to open the PWB box

1. Remove the rear right cover.
   G.5.2.18 Rear right cover
2. Remove the lower rear cover/1.
   G.5.2.20 Lower rear cover/1
3. Remove the lower rear cover/2.
   G.5.2.21 Lower rear cover/2

4. Remove the screw [1], and remove the connector cover [2].

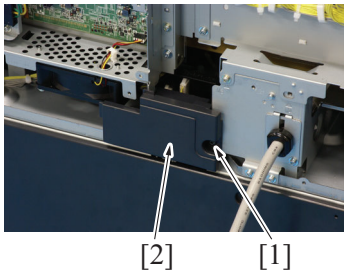

5. Remove eight screws [1] of the PWB box.

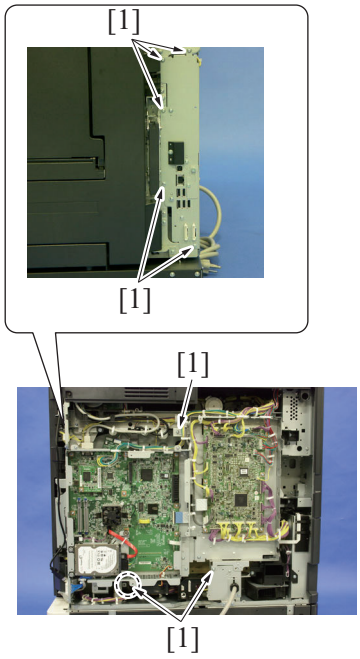

6. Remove the harness from three wire saddles [1].

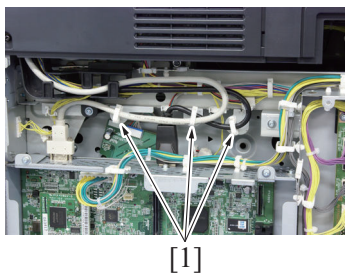

7. Loosen two screws [1].
8. Disconnect two connectors [2].

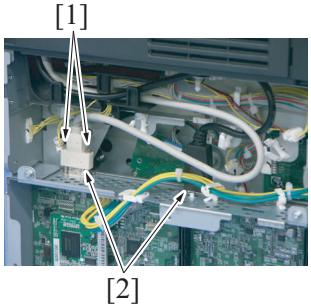

9. Open the PWB box.

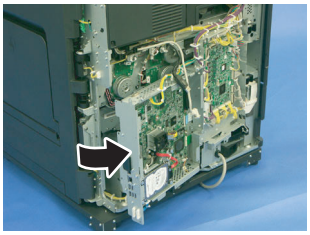

5.3.10 Main drive unit

1. Remove the lower rear cover/1.
   G.5.2.20 Lower rear cover/1
2. Remove the lower rear cover/2.
   G.5.2.21 Lower rear cover/2
3. Remove the upper rear cover.
   G.5.2.22 Upper rear cover
4. Open the PWB box.
   G.5.3.9 How to open the PWB box
5. Remove the high voltage unit.
   G.5.4.13 High voltage unit (HV)
6. Remove the transport motor.
   G.5.5.5 Transport motor (M1)

7. Remove the screw [1].
8. Remove the harness guide [2] as clearing the harness.

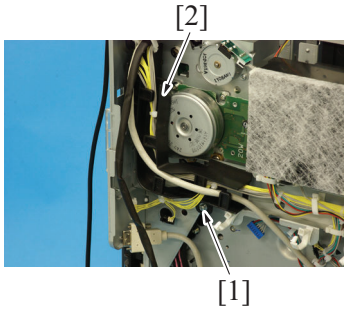

9. Disconnect the connector [1].

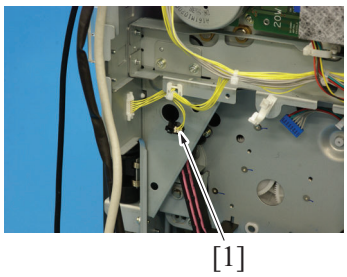

10. Remove four screws [1], and remove the metal plate [2].

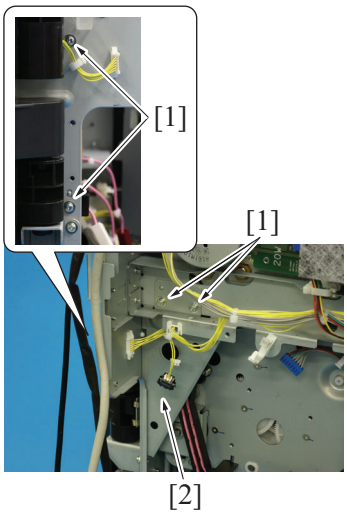

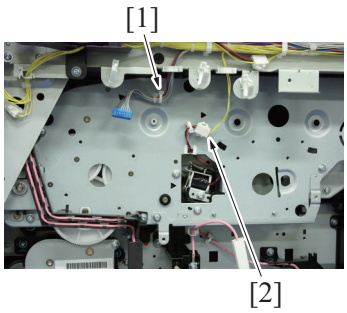

11. Remove the harness from the wire saddle [1].
12. Disconnect the connector [2].

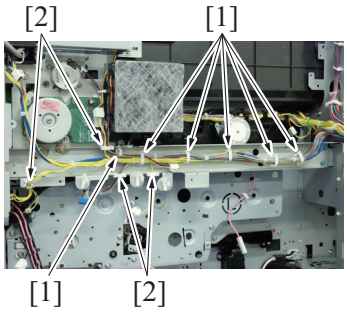

13. Remove the harness from six wire saddles [1] and four edge covers [2].

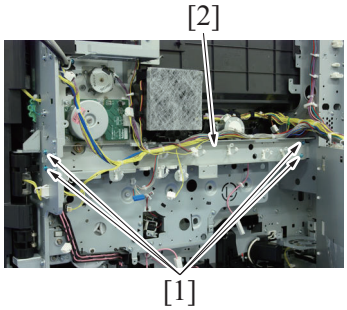

14. Remove four screws [1].
15. Remove the reinforcing plate [2] as clearing the harness.

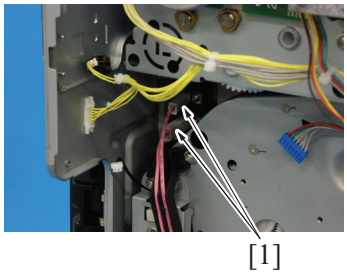

16. Remove two solderless terminals [1].

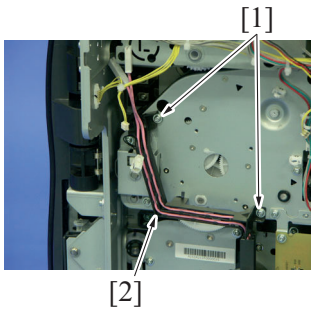

17. Remove two screws [1], and remove the harness guide [2].

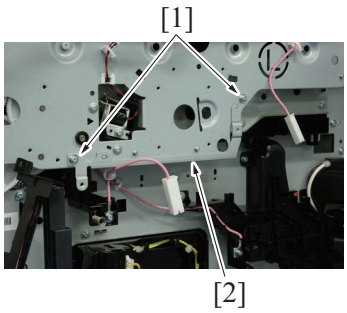

18. Remove two screws [1], and remove the bracket [2].

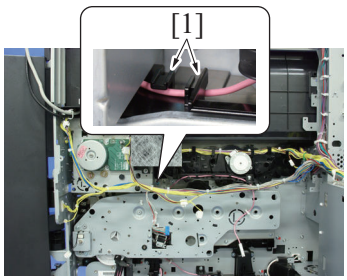

19. Remove the harness from harness guide [1].

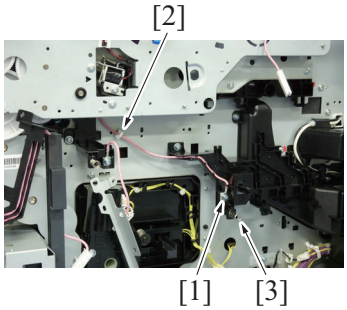

20. Remove the screw [1], and remove the harness from the harness guide.
21. Remove the harness from the wire saddle [2].
NOTE
- **Make sure not to lose the spring [3].**

22. Open the right door.

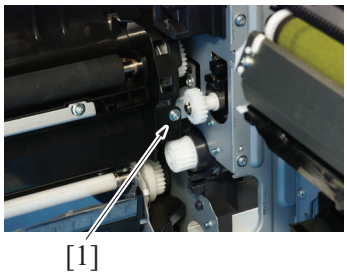

23. Remove the screw [1].

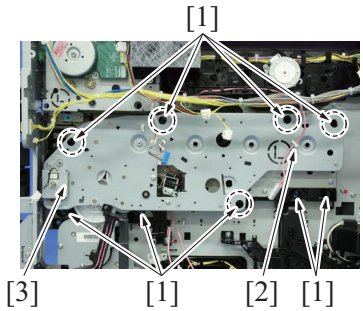

24. Remove nine screws [1], and remove the harness from the wire saddle [2].
25. Remove the main drive unit [3].

26. To reinstall, reverse the order of removal.

5.3.11 Transport unit

1. Remove the transfer belt unit.
F.6.6.3 Replacing the transfer belt unit
2. Remove the lower front cover.
G.5.2.14 Lower front cover

3. Remove the front cover.
   G.5.2.15 Front cover

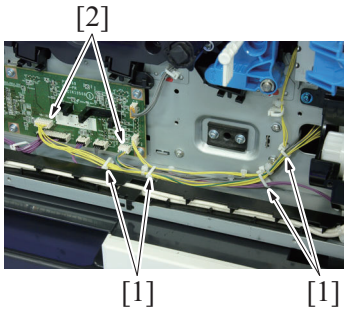

4. Remove the harness from four wire saddles [1].
5. Disconnect two connectors (CN8, CN11) [2] on the front side board.

6. Open the right door and the regist unit.

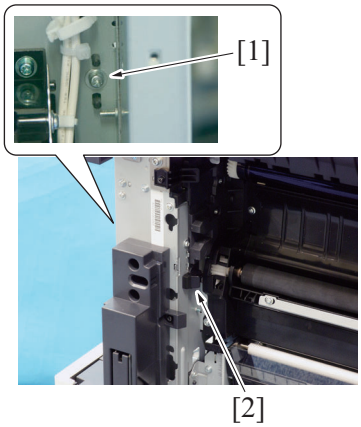

7. Remove the screw [1], and remove the stopper [2].

8. Remove four screws [1], and remove the transport unit [2].
   NOTE
   - **When removing the transport unit [2], be careful not to damage or deform the guide sheet of the tray 1 paper feed unit.**

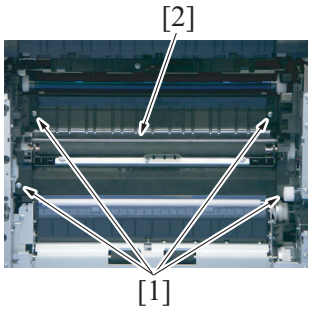

9. To reinstall, reverse the order of removal.

5.3.12 Fusing drive unit

1. Remove the fusing unit.
   F.6.11.1 Replacing the fusing unit
2. If an optional FAX kit FK-511 is mounted, remove the FAX board.
   G.6.15.1 FAX Kit (Line1), FAX Kit (Line2) (FK-511)
   G.6.15.2 FAX Kit (Line1), FAX Kit (Line2) (FK-511) (with MK-728)
3. Remove the upper rear cover.
   G.5.2.22 Upper rear cover
4. Remove the lower rear cover/1.
   G.5.2.20 Lower rear cover/1
5. Remove the lower rear cover/2.
   G.5.2.21 Lower rear cover/2
6. Open the PWB box.
   G.5.3.9 How to open the PWB box
7. Remove the fusing motor.
   G.5.5.6 Fusing motor (M3)
8. Remove the fusing pressure motor.
   G.5.5.7 Fusing pressure motor (M11)

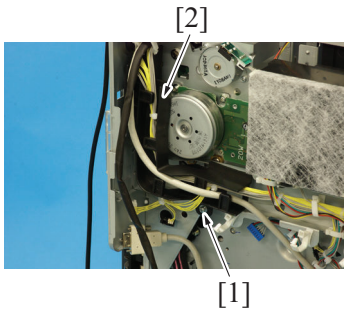

9. Remove the screw [1].
10. Remove the harness guide [2] as clearing the harness.

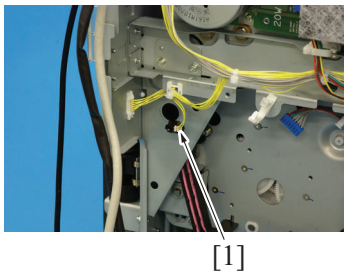

11. Disconnect the connector [1].

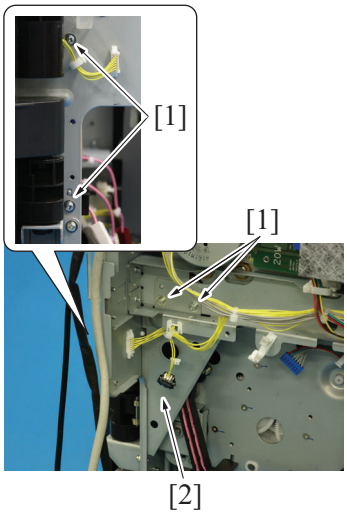

12. Remove four screws [1], and remove the metal plate [2].

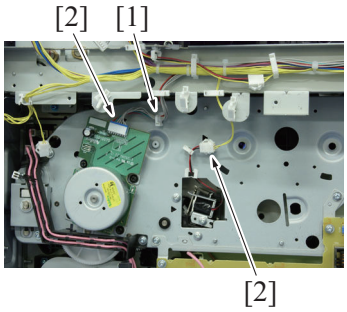

13. Remove the harness from the wire saddle [1].
14. Disconnect two connectors [2].

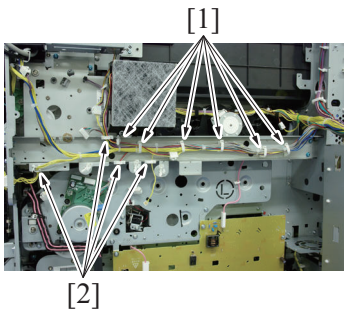

15. Remove the harness from the six wire saddles [1] and four edge covers [2].

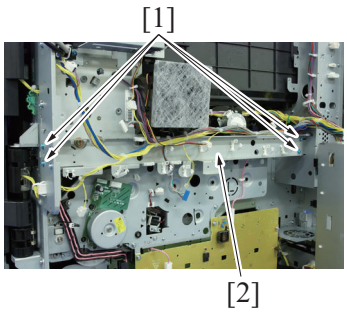

16. Remove four screws [1].
17. Remove the reinforcing plate [2] as clearing the harness.

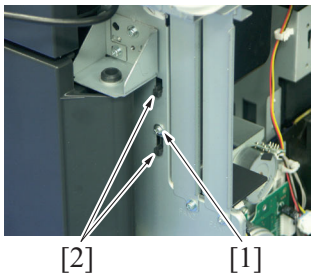

18. Remove the screw [1], and remove two tabs [2].

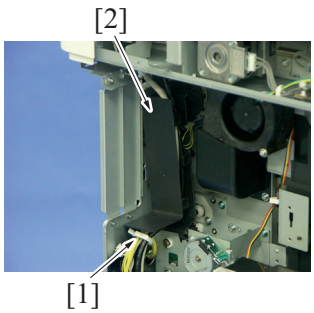

19. Remove the harness from the wire saddle [1].
20. Remove the harness guide [2] as clearing the harness.

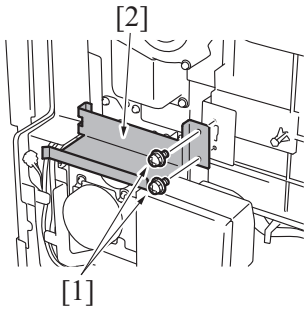

NOTE
- **Remove two screws [1], and remove the metal plate [2]. (Only for Europe)**

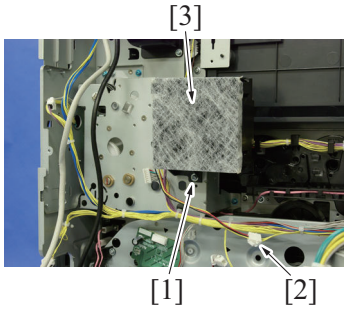

21. Remove the screw [1]. Disconnect the connector [2], and remove the toner bottle cooling fan assy [3].

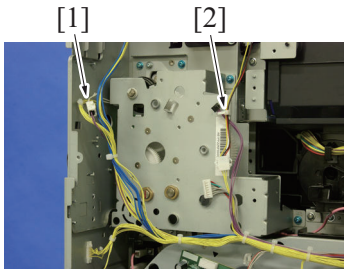

22. Disconnect the connector [1].
23. Remove the harness from the wire saddle [2].

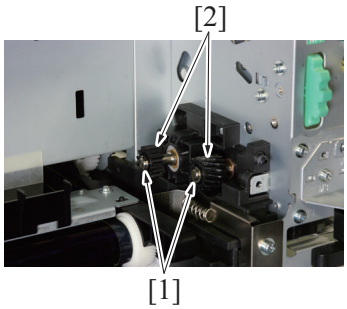

24. Remove the E-ring [1] each, and remove two gears [2].

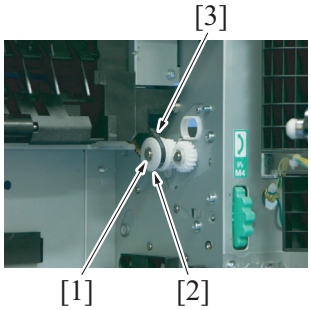

25. Remove the E-ring [1], and remove the flange [2].
26. Remove the belt [3] from the gear.

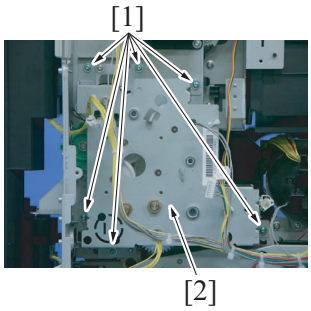

27. Remove six screws [1], and remove the fusing drive unit [2].

28. To reinstall, reverse the order of removal.

5.3.13 Hopper drive unit

1. Remove the upper rear cover.
   G.5.2.22 Upper rear cover
2. Remove the lower rear cover/1.
   G.5.2.20 Lower rear cover/1
3. Remove the lower rear cover/2.
   G.5.2.21 Lower rear cover/2
4. Remove the exit tray.
   G.5.2.17 Exit tray
5. Open the PWB box.
   G.5.3.9 How to open the PWB box

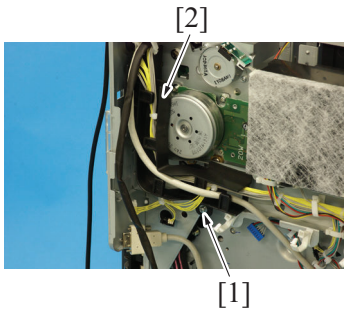

6. Remove the screw [1].
7. Remove the harness guide [2] as clearing the harness.

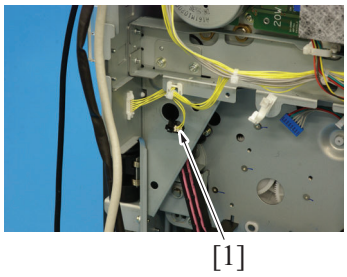

8. Disconnect the connector [1].

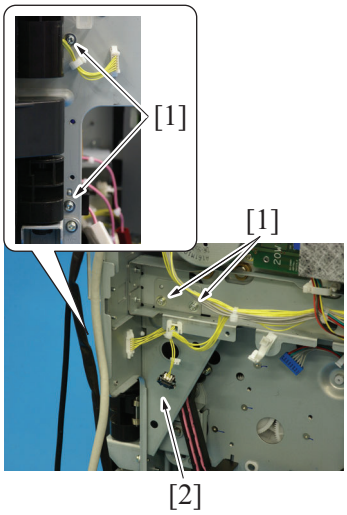

9. Remove four screws [1], and remove the metal plate [2].

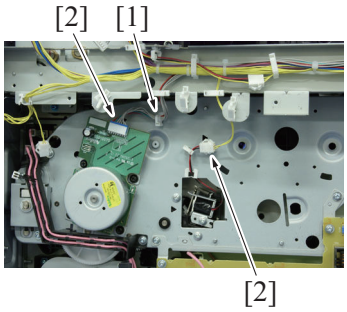

10. Remove the harness from the wire saddle [1].
11. Disconnect two connectors [2].

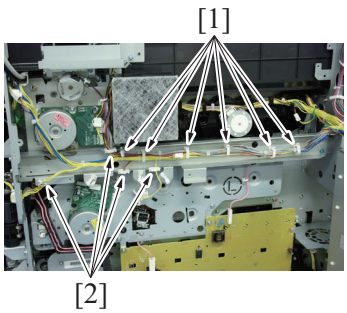

12. Remove the harness from six wire saddles [1] and four edge covers [2].

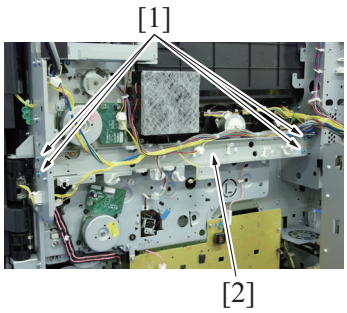

13. Remove four screws [1].
14. Remove the reinforcing plate [2] as clearing the harness.

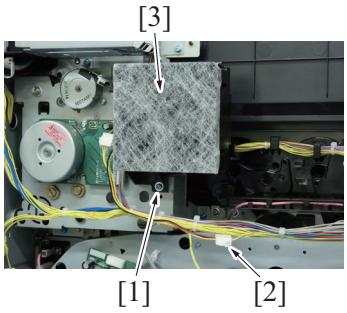

15. Remove the screw [1]. Disconnect the connector [2], and remove the toner bottle cooling fan assy [3].

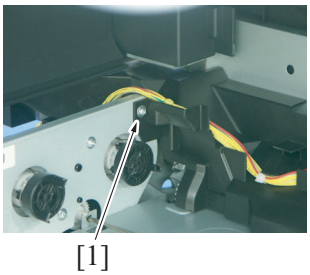

16. Remove the screw [1].

17. Remove the toner bottle motor.
G.5.5.3 Toner bottle motor (M10)

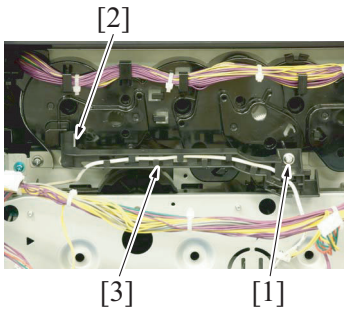

18. Remove the screw [1] and the tab [2], and remove the harness guide [3].

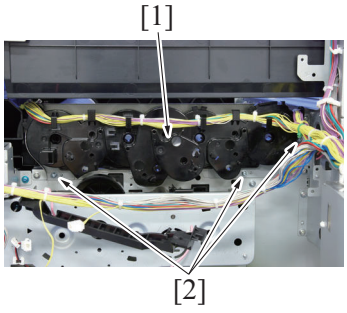

19. Remove the harness from the harness guide of the hopper drive unit [1].
20. Remove three screws [2], and remove the hopper drive unit [1].

21. To reinstall, reverse the order of removal.

5.4 Disassembly/reassembly procedure (Boards)

5.4.1 CCD board (CCDB)

(1) Removal procedure

1. Remove the original glass.

G.5.2.12 Original glass

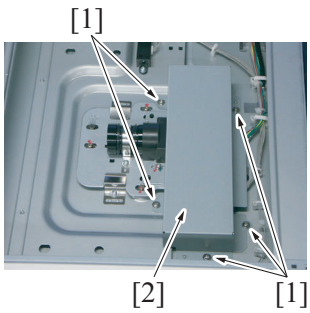

2. Remove five screws [1], and remove the CCD board protective shield [2].

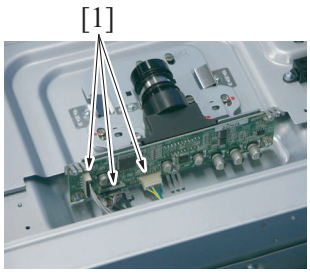

3. Disconnect three connectors [1].

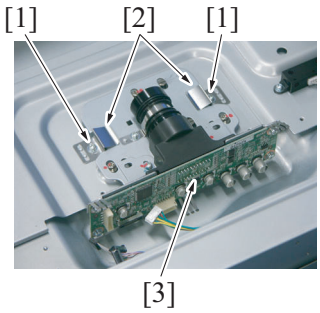

4. Remove the screw [1] each, and remove two retainer plates [2].
5. Remove the CCD board [3].

(2) Reinstall procedure

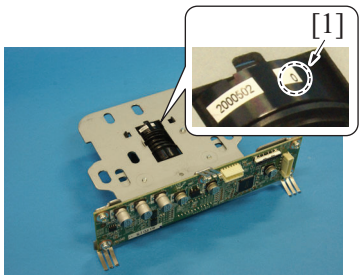

1. Check the mark [1] on lens of the CCD board.
NOTE
- **The mark is be "-", "0", or "+".**

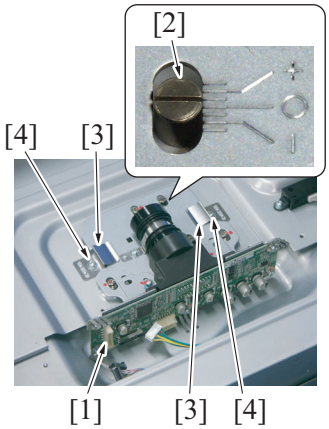

2. Install the CCD board [1] to the main body.
3. Set the scale [2] of the CCD board to the same position as the mark checked on step 1, and secure it with two retainer plates [3] and the screw [4] at two points.

4. For the rest of the mounting procedure, reverse the order of removal.

5. Reinstall the original glass.
6. Turn ON the main power switch.
7. Carry out the [Service Mode] -> [System 2] -> [CCD Calibration].
8. Carry out the [Service Mode] -> [System 2] -> [Line Mag Setting].
9. Carry out the [Service Mode] -> [Machine] -> [Printer Area] -> [Paper Feed Direction Adj.].
10. Carry out the [Service Mode] -> [Machine] -> [Scan Area] -> [Main Scan Zoom Adj.]. If the specifications are not met, loosen the CCD board mounting screws and move the CCD board in the sub scan direction as necessary.
    NOTE
    - **Hold the CCD board by hand when moving it. NEVER use a screwdriver or similar tool to tap to move it, as a varied distance between the CCD sensor and lens results.**

11. Carry out the [Service Mode] -> [Machine] -> [Scan Area] -> [Scanner Image Side Edge].

5.4.2 Scanner drive board (SCDB)

1. Remove the scanner upper rear cover.
   G.5.2.5 Scanner upper rear cover

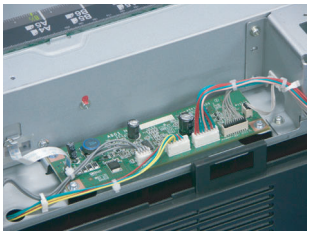

2. Disconnect all connectors on the scanner drive board.

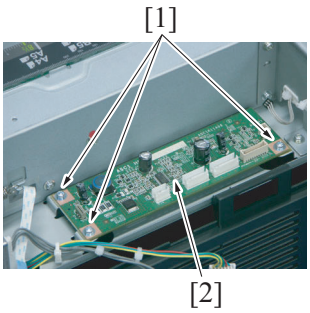

3. Remove three screws [1], and remove the scanner drive board [2].

4. To reinstall, reverse the order of removal.

5.4.3 LED board (LEDB)

1. Remove the control panel front cover.
   G.5.2.10 Control panel front cover

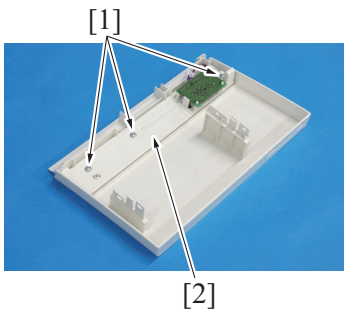

2. Remove three screws [1], and remove the LED board assy [3].

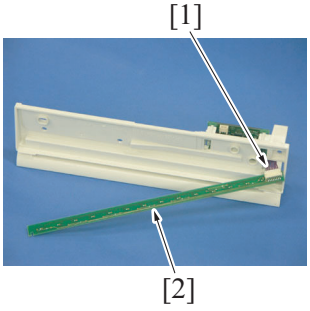

3. Disconnect the connector [1], and remove the LED board [2].

4. To reinstall, reverse the order of removal.

5.4.4 LED control board (LEDCB)

1. Remove the control panel left cover/2.
   G.5.2.7 Control panel left cover/2

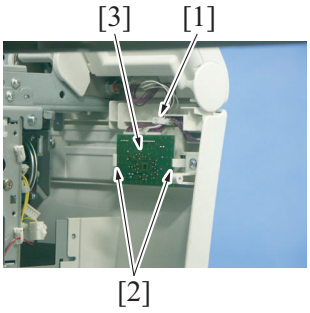

2. Remove the harness from the wire saddle [1].
3. Remove two claws [2], and pull out the LED control board [3].

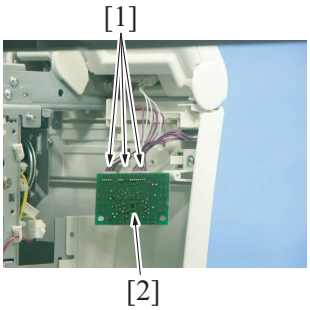

4. Disconnect three connectors [1], and remove the LED control board [2].

5. To reinstall, reverse the order of removal.

5.4.5 USB board (USBB)

1. Remove the control panel right cover.
   G.5.2.8 Control panel right cover

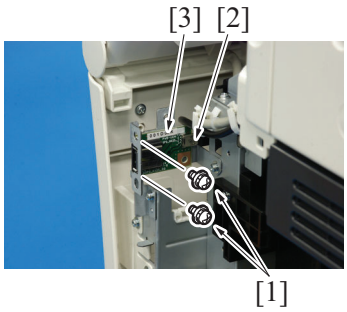

2. Remove two screws [1]. Disconnect the connector [2], and remove the USB board [3].

3. To reinstall, reverse the order of removal.

5.4.6 Front side board (FRB)

1. Remove the front cover.
   G.5.2.15 Front cover

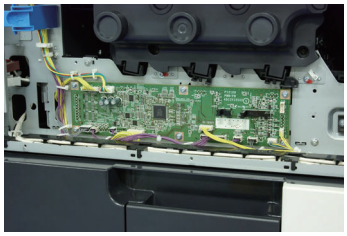

2. Disconnect all connectors on the front side board.

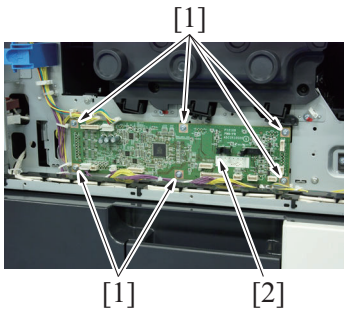

3. Remove six screws [1], and remove the front side board [2].

4. To reinstall, reverse the order of removal.

5.4.7 DC power supply (DCPU)

⚠WARNING

- To avoid electric shock, after turning OFF the power switch, do not touch the hazards area on DC power supply unit for 180 minutes.
  If the DC power supply unit is faulty, it may take time before its voltage drops sufficiently.

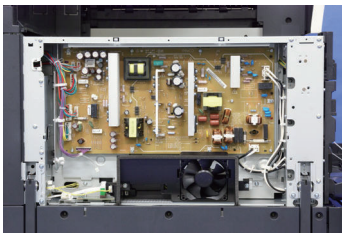

1. Remove the left cover.
   G.5.2.16 Left cover
2. Remove the exit tray.
   G.5.2.17 Exit tray

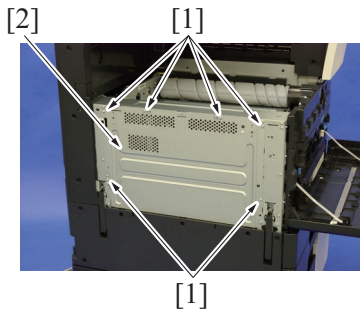

3. Remove six screws [1], and remove the DC power supply protective shield [2].

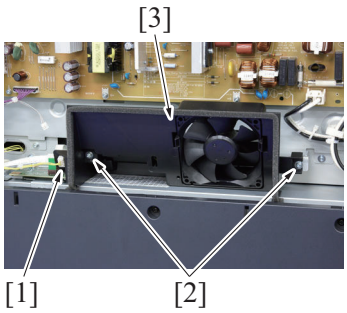

4. Disconnect the connector [1].
5. Remove two screws [2], and remove the power supply cooling fan assy [3].

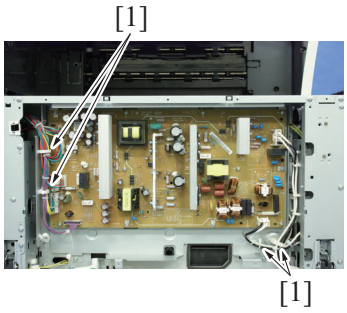

6. Remove the harness from four wire saddles [1].

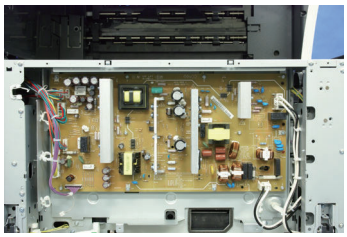

7. Disconnect all connectors on the DC power supply.

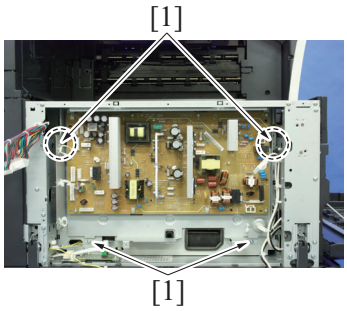

8. Remove four screws [1], and remove the DC power supply [2].

9. To reinstall, reverse the order of removal.

5.4.8 PH relay board (PHRYB)

1. Remove the left cover.
   G.5.2.16 Left cover
2. Remove the exit tray.
   G.5.2.17 Exit tray

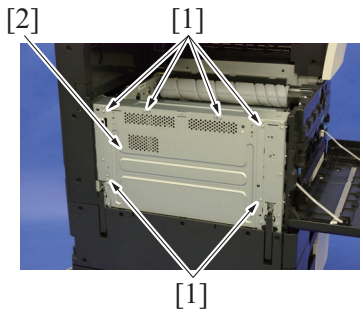

3. Remove six screws [1], and remove the DC power supply protective shield [2].

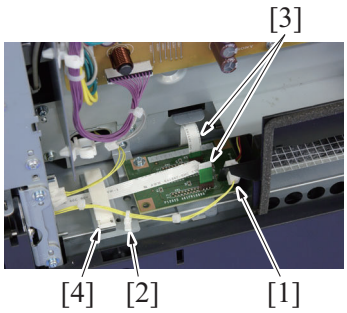

4. Disconnect the connector [1], and remove the harness from the wire saddle [2].
5. Disconnect two flat cables [3] on the PH relay board.
6. Remove the flat cable from the cable holder [4].

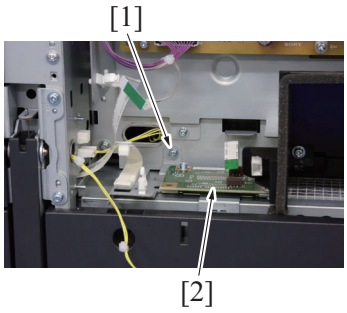

7. Remove the screw [1], and remove the PH relay board assy [2].

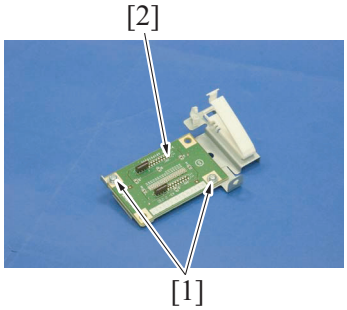

8. Remove two screws [1], and remove the PH relay board [2].

9. To reinstall, reverse the order of removal.

5.4.9 Printer control board (PRCB)

NOTE

- **Do not replace the printer control board and the SSD board with new ones at the same time. The backup data is lost and image failure may be caused.**
- **Do not replace the printer control board and the MFP board with new ones at the same time.**

1. Remove the lower rear cover/1.
   G.5.2.20 Lower rear cover/1
2. Remove the lower rear cover/2.
   G.5.2.21 Lower rear cover/2

3. Disconnect all connectors on the printer control board.

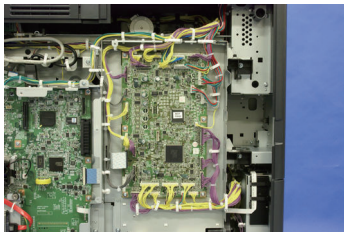

4. Remove six screws [1], and remove the printer control board [2].

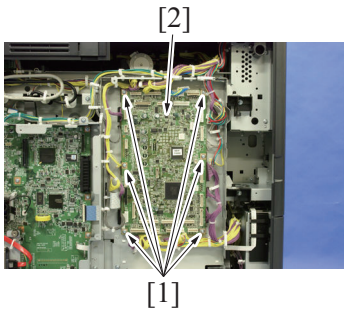

5. To reinstall, reverse the order of removal.
6. Install the firmware.
7. Turn OFF the main power switch.
8. Disconnect the finisher or job separator.
9. Turn ON the main power switch.
10. C-4802 code will appear. (C-4802 is normal operation when replacing the PRCB.)
11. Call the Service Mode to the screen.
12. Select [Enhanced Security] -> [Engine Data Backup].
13. Select [Engine Data Reflect Mode] and press the Start key.
14. Select [Yes] and press the Start key again.
15. When [OK] is displayed, reboot the MFP.
16. Connect the finisher or job separator.
17. Turn ON the main power switch.

5.4.10 SSD board (SSDB)

NOTE

- **Never use the combination of the used SSD board removed from another machine and the original MFP board. This combination causes corruption of stored data.**
  Note that the combination of the original SSD board and the used MFP board removed from another machine also causes the same problem.
- **Do not replace the printer control board and the SSD board with new ones at the same time. The backup data is lost and image failure may be caused.**
- **Do not replace the MFP board and the SSD board with new ones at the same time.**

1. Remove the lower rear cover/1.
   G.5.2.20 Lower rear cover/1

2. Remove the screw [1], and remove the SSD board [2].

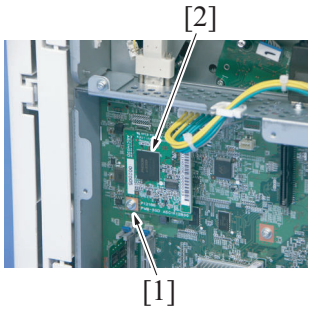

3. To reinstall, reverse the order of removal.
4. Install the firmware.

5.4.11 Memory board/1 (MEMB/1)

1. Remove the lower rear cover/1.
   G.5.2.20 Lower rear cover/1

2. Remove the memory board/1 [1] on the MFP board.
   NOTE
   - **When the optional upgrade kit UK-204 is installed, the memory board/2 can be removed in the same steps.**

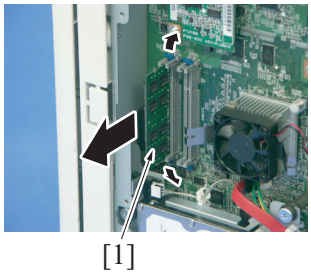

3. To reinstall, reverse the order of removal.

5.4.12 MFP board (MFPB)

NOTE

- **Never use the combination of the used MFP board removed from another machine and the original SSD board. This combination causes corruption of stored data.**
  Note that the combination of the original MFP board and the used SSD board removed from another machine also causes the same problem.
- **Do not replace the MFP board and the SSD board with new ones at the same time.**
- **Do not replace the MFP board and the printer control board with new ones at the same time.**

1. Remove the hard disk.
   G.5.3.8 Hard disk
2. Remove the SSD board.
   G.5.4.10 SSD board (SSDB)
3. Remove the memory board/1 and memory board/2.
   G.5.4.11 Memory board/1 (MEMB/1)
4. If an optional reverse automatic document feeder DF-701 is mounted, remove the dual scan image processing board.
   G.6.4.11 Dual scan image processing board (DSIPB) (DF-701)
5. If an optional security kit SC-508 is mounted, remove the DSC board/1 and DSC board/2.
6. Open the PWB box.
   G.5.3.9 How to open the PWB box

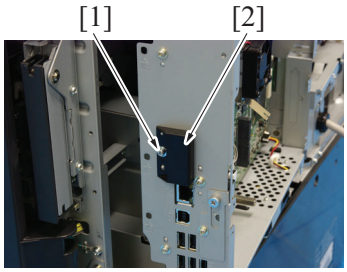

7. Remove the screw [1], and remove the cover [2].

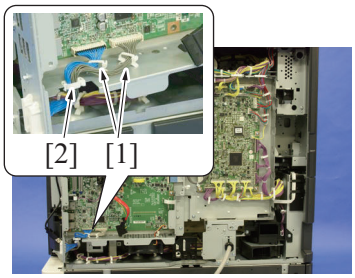

8. Remove the harness from the wire saddle [1] and the edge cover [2].
9. Remove all connectors and flat cables on the MFP board. (The connector for the CPU cooling fan is excluded.)

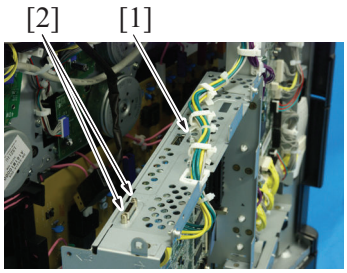

10. Remove the screw [1] and two bolts [2] of the MFP board.

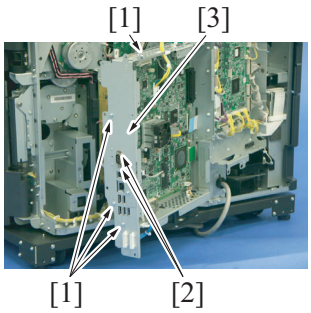

11. Remove four screws [1] and two bolts [2], and remove the metal plate [3].

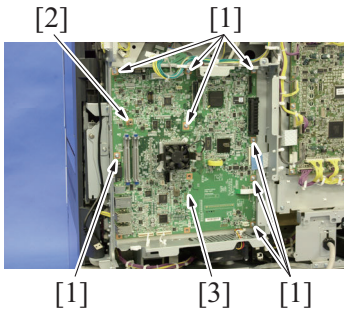

12. Remove eight screws [1] and the screw [2], and remove the MFP board [3].

13. To reinstall, reverse the order of removal.
14. Put the USB memory includes firmware into service port, turn the main power switch ON.

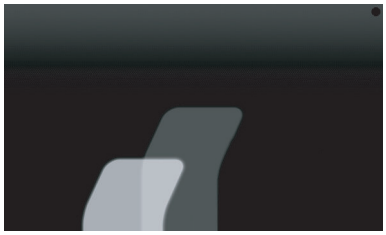

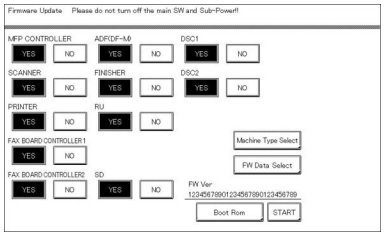

15. Wait 2 minutes, Firmware update screen appears, touch [Machine Type Select].

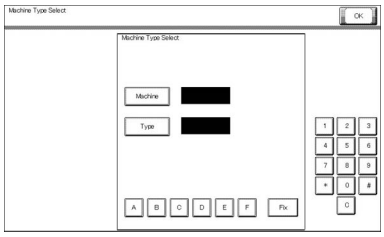

16. Enter [Machine] and [Type], then touch [Fix].
NOTE
- **Check the serial number of the product and, according to the first four digits of the serial number, select [Machine] and [Type].**

First four digits of the serial number	A61F	A61G	A61H
[Machine]	4	4	4
[Type]	1	2	3

- **A wrong setting results in the "Trouble code C-C164" or warning message "Reset HDD Lock Password".**

17. Touch [OK].
18. Install the firmware.
19. Turn OFF the main power switch and remove the USB memory.
20. Wait 10 seconds, turn ON the main power switch and wait 2 minutes until boot up the machine completely.
21. C-D390 code will appear. (C-D390 is normal operation when replacing the MFPB with a NEW MFPB.)



22. Wait until [Recover Data] [1] appears. (MFP will reboot maximum 2 times by itself, it may take 5 minutes.)

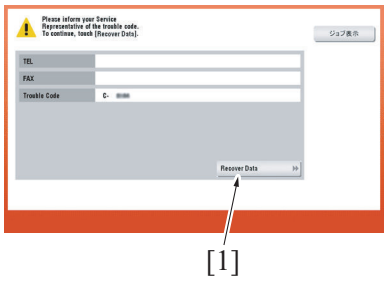

23. Touch [Recover Data] and [Yes].
24. Turn OFF the main power switch, wait 10 seconds, then turn ON the main power switch, after “Turn the main switch OFF and ON.” message is appeared.

5.4.13 High voltage unit (HV)

1. Open the PWB box,
G.5.3.9 How to open the PWB box

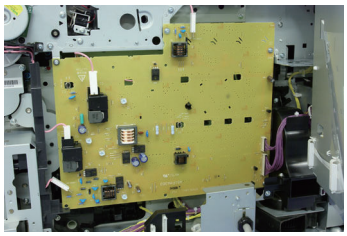

2. Disconnect all connectors and solderless terminals on the high voltage unit.

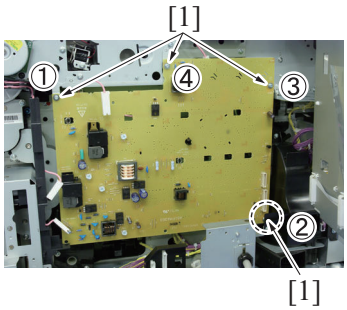

3. Remove four screws [1] of the high voltage unit.
NOTE
- **When installing the high voltage unit, tighten the screws in the order shown in the illustration.**

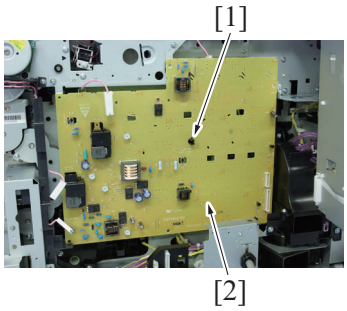

4. Unhook the tab [1], and remove the high voltage unit [2].
NOTE
- **When mounting the high voltage unit, the terminal contact point must be contacted without fail. The claw also must be firmly hooked.**

5. To reinstall, reverse the order of removal.

5.4.14 ERP board (ERPB)

1. Remove the upper rear cover.
G.5.2.22 Upper rear cover

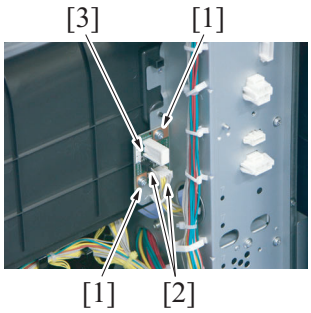

2. Remove two screws [1]. Disconnect two connectors [2], and remove the ERP board [3].

3. To reinstall, reverse the order of removal.

5.4.15 Tray 1 FD paper size board (FDPSB/1), tray 2 FD paper size board (FDPSB/2)

NOTE

- **The tray 1 FD paper size board and the tray 2 FD paper size board are of the same form and mechanism. This procedure shows the steps taken for the tray 1 FD paper size board.**

1. Remove the tray 1.
   G.5.2.23 Tray 1
2. Remove the tray 2.
   G.5.2.24 Tray 2

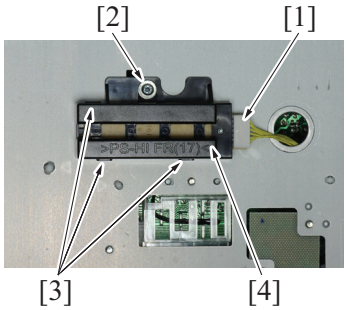

3. Disconnect the connector [1].
4. Remove the screw [2] and three tabs [3], and remove the tray 1 FD paper size board assy [4].

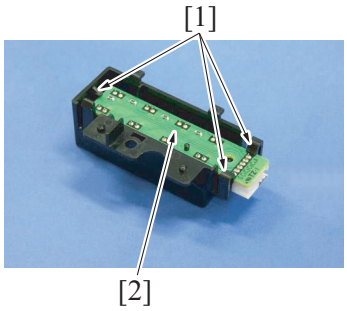

5. Remove three tabs [1], and remove the tray 1 FD paper size board [2].

6. To reinstall, reverse the order of removal.

5.4.16 Tray 1 CD paper size board (CDPSB/1), tray 2 CD paper size board (CDPSB/2)

NOTE

- **The tray 1 CD paper size board and the tray 2 CD paper size board are of the same form and mechanism. This procedure shows the steps taken for the tray 1 CD paper size board.**

1. Remove the high voltage unit.
   G.5.4.13 High voltage unit (HV)
2. Slide out the tray 1

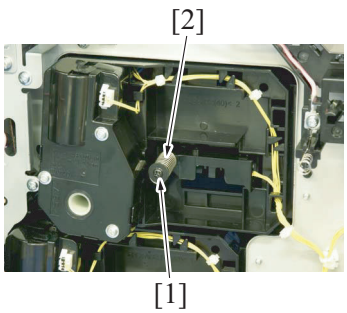

3. Remove the screw [1], and remove the spring [2].

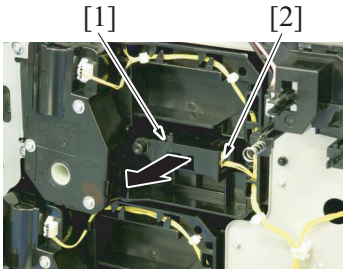

4. Slide out the tray 1 paper size board assy [1] and disconnect the connector [2].
5. Remove the tray 1 paper size board assy [1].

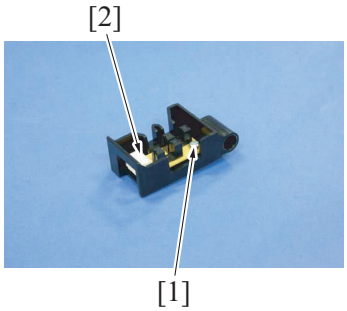

6. Remove two screws [1], and remove the tray 1 CD paper size board [2].

7. To reinstall, reverse the order of removal.

5.4.17 Tray 1 empty indicator board (PEIB/1), tray 2 empty indicator board (PEIB/2)

1. Slide out the tray 1 and the tray 2.

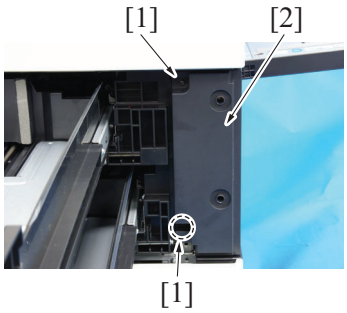

2. Remove two screws [1], and remove the tray right cover [2].

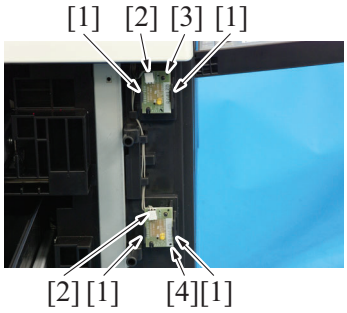

3. Unhook two tabs [1] each. Disconnect the connector [2] each, and remove the tray 1 empty indicator board [3] and the tray 2 empty indicator board [4].

4. To reinstall, reverse the order of removal.

5.5 Disassembly/reassembly procedure (Motors)

5.5.1 Scanner motor (M201)

(1) Removal procedure

1. Remove the scanner rear cover.
   G.5.2.1 Scanner rear cover
2. Remove the scanner upper rear cover.
   G.5.2.5 Scanner upper rear cover
3. Remove the scanner right cover.
   G.5.2.2 Scanner right cover

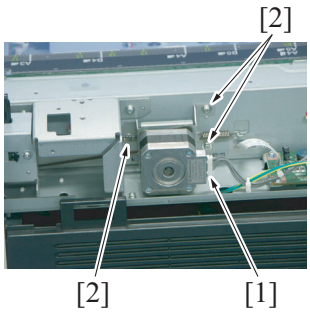

4. Disconnect the connector [1], and remove three screws [2].

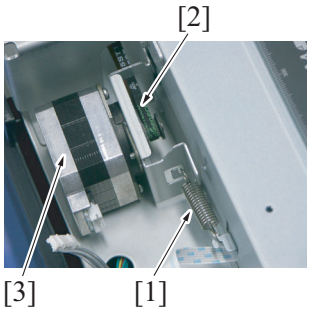

5. Remove the spring [1] and the belt [2], and remove the scanner motor assy [3].

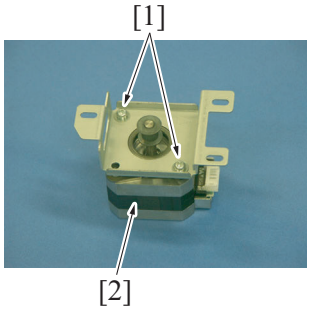

6. Remove two screws [1], and remove the scanner motor [2].

(2) Reinstall procedure

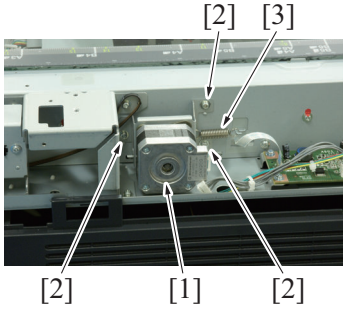

1. Attach the spring [3] to the scanner motor assy [1].
2. Temporarily secure the scanner motor assy [1] with three screws [2].
   NOTE
   - **The screws [2] should be temporarily tightened to a degree that the position of the motor can be adjusted by the spring force**
   - **When installing the scanner motor, make sure that the scanner motor is disconnected with the connector.**

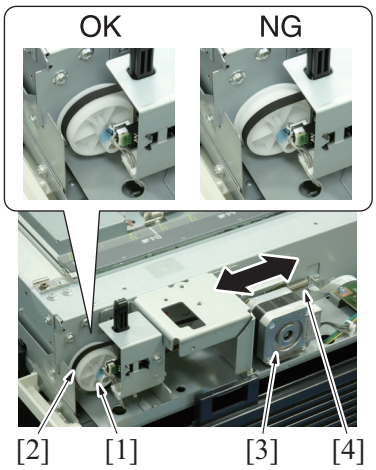

3. Attach the drive belt [2] to the pulley [1] and the gear of scanner motor.
4. Move the scanner motor assy [3] in the direction shown in the illustration for two to three times, then make sure that it runs smoothly.
   NOTE
   - **Make sure that the drive belt [2] is properly kept tight by the spring [4] force.**
   - **If the deflection or tension of the drive belt [2] is excessive, the scanner unit does not work correctly. This may result in trouble.**
   - **Make sure that the drive belt [2] is attached to the pulley [1] correctly.**

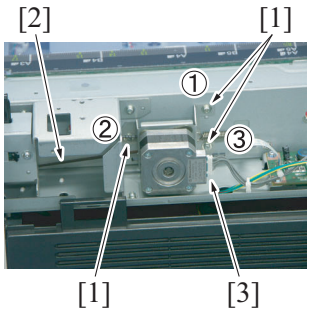

5. Tighten three screws [1] in the order shown in the illustration to fix the scanner motor assy.
   NOTE
   - **When tightening the screw [1], make sure that the scanner motor assy is not touched.**
   - **After securing the scanner motor assy, check again that the deflection and tension of the drive belt [2] are not excessive.**
6. Connect the connector [3] to the scanner motor.
7. Carry out the [Service Mode] -> [Machine] -> [Scan Area] -> [Main Scan Zoom Adj.].

5.5.2 ADU transport motor (M5)

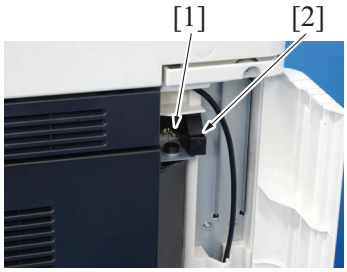

1. Remove the screw [1], and remove the right door stopper (upper section) [2].

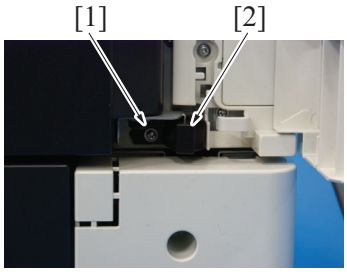

2. Remove the screw [1], and remove the right door stopper (lower section) [2].

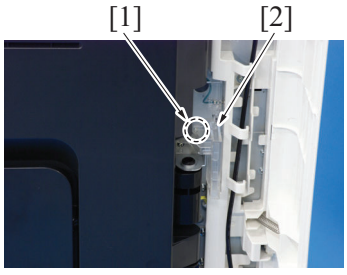

3. Remove the screw [1], and remove the connector cover [2].
4. Open the right door.

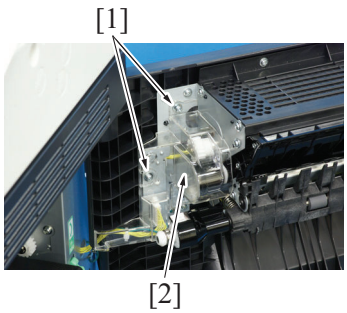

5. Remove two screws [1], and remove the gear cover [2].

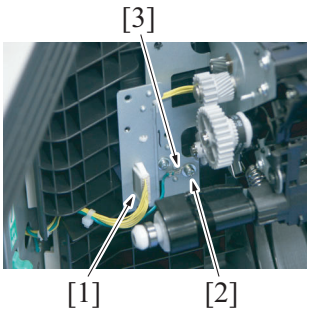

6. Disconnect the connector [1].
7. Remove the screw [2], and remove the ground terminal [3].

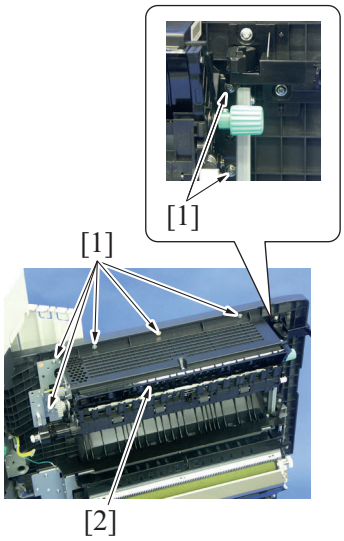

8. Remove seven screws [1], and remove the ADU transport assy [2].

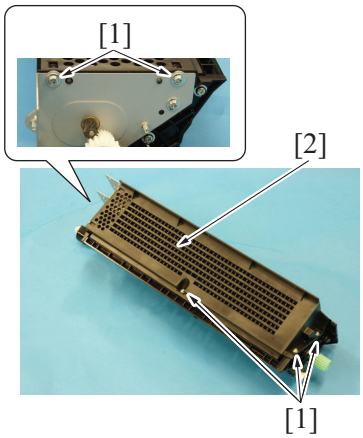

9. Remove five screws [1], and remove the guide [2].

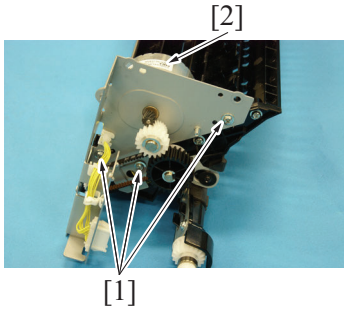

10. Remove three screws [1] to release the ADU transport motor assy [2].

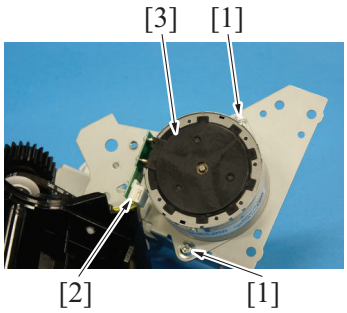

11. Remove two screws [1]. Disconnect the connector [2], and remove the ADU transport motor [3].

12. To reinstall, reverse the order of removal.

5.5.3 Toner bottle motor (M10)

1. Remove the upper rear cover.
   G.5.2.22 Upper rear cover

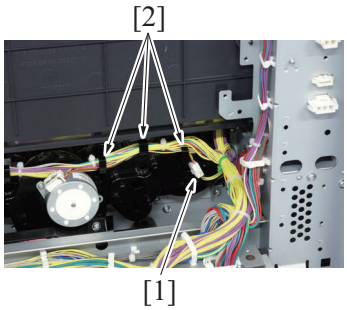

2. Disconnect the connector [1], and remove the harness from the harness guide [2].

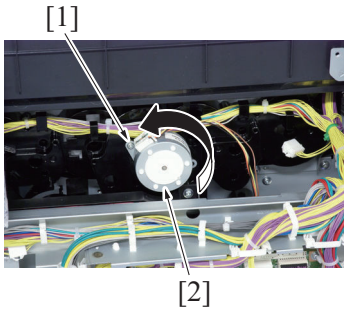

3. Remove the screw [1], and remove the toner bottle motor [2].
   NOTE
   - **When removing the toner bottle motor [2], make sure to turn it in the direction shown in the illustration.**

4. To reinstall, reverse the order of removal.

5.5.4 Toner supply motor/K (M6)

1. Remove the sub hopper unit.
   G.5.3.4 Sub hopper unit

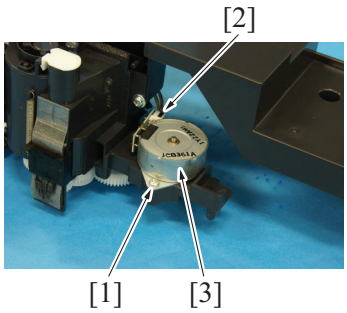

2. Remove the screw [1]. Disconnect the connector [2], and remove the toner supply motor/K [3].

3. To reinstall, reverse the order of removal.

5.5.5 Transport motor (M1)

1. Open the PWB box.
   G.5.3.9 How to open the PWB box

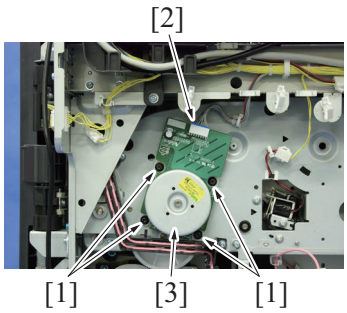

2. Remove four screws [1]. Disconnect the connector [2], and remove the transport motor [3].

3. To reinstall, reverse the order of removal.

5.5.6 Fusing motor (M3)

1. Remove the upper rear cover.
G.5.2.22 Upper rear cover

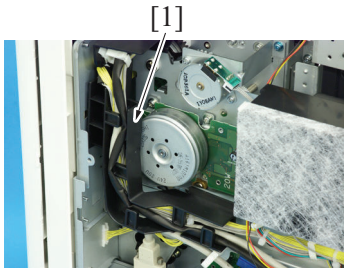

2. Remove the harness from the harness guide [1].

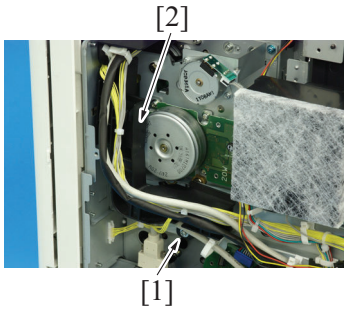

3. Remove the screw [1], and remove the harness guide [2].

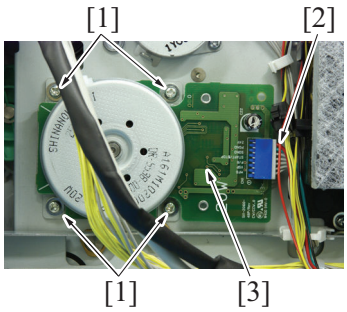

4. Remove four screws [1]. Disconnect the connector [2], and remove the fusing motor [3].

5. To reinstall, reverse the order of removal.

5.5.7 Fusing pressure motor (M11)

1. Remove the upper rear cover.
G.5.2.22 Upper rear cover

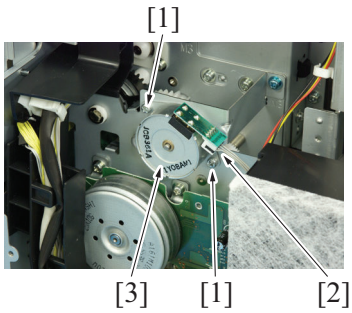

2. Remove two screws [1]. Disconnect the connector [2], and remove the fusing pressure motor [3].

3. To reinstall, reverse the order of removal.

5.5.8 Reverse motor (M4)

(1) Removal procedure

1. Remove the upper rear cover.
   G.5.2.22 Upper rear cover
2. Remove the rear right cover.
   G.5.2.18 Rear right cover
3. If an optional FAX kit FK-511 is mounted, remove the FAX board.
   G.6.15.1 FAX Kit (Line1), FAX Kit (Line2) (FK-511)
   G.6.15.2 FAX Kit (Line1), FAX Kit (Line2) (FK-511) (with MK-728)

4. Remove the screw [1], and remove two tabs [2].

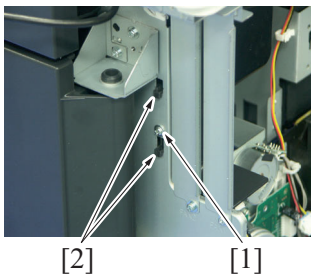

5. Remove the harness from the wire saddle [1].
6. Remove the harness guide [2] as clearing the harness.

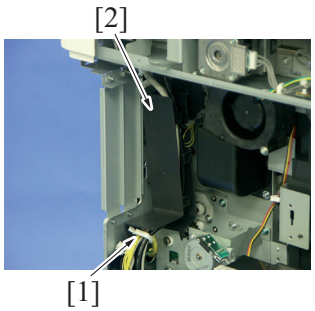

NOTE

- **Remove two screws [1], and remove the metal plate [2]. (Only for Europe)**

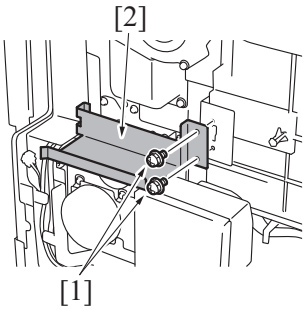

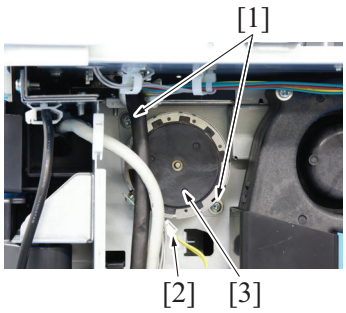

7. Remove two screws [1]. Disconnect the connector [2], and remove the reverse motor [3].

(2) Reinstall procedure

1. Remove the scanner right cover.
   G.5.2.2 Scanner right cover
2. Remove the upper right cover.
   G.5.2.19 Upper right cover

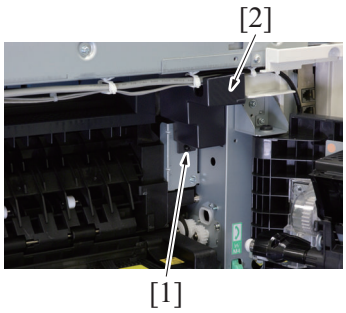

3. Remove the screw [1], and remove the cover [2].

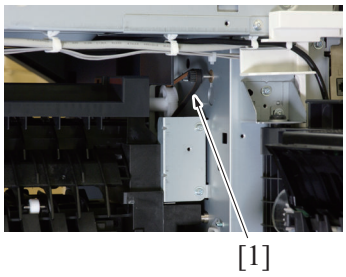

4. Attach the drive belt [1] to the gear of the reverse motor.

5. Attach it in reversed procedures of removal.

5.5.9 Tray 1 lift-up motor (M12)

1. Remove the high voltage unit.
   G.5.4.13 High voltage unit (HV)
2. Slide out the tray 1.

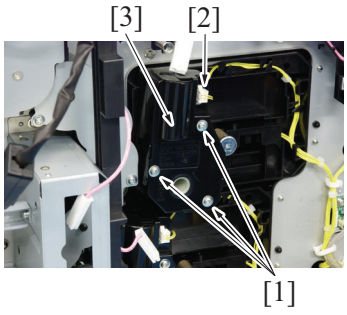

3. Remove three screws [1]. Disconnect the connector [2], and remove the tray 1 lift-up motor [3].

4. To reinstall, reverse the order of removal.

5.5.10 Tray 2 lift-up motor (M13)

1. Remove the high voltage unit.
   G.5.4.13 High voltage unit (HV)
2. Slide out the tray 2.

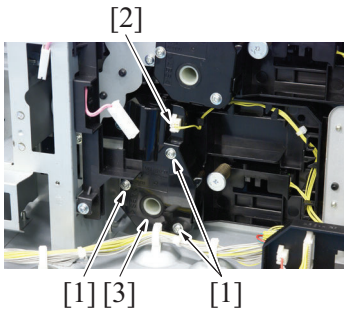

3. Remove three screws [1]. Disconnect the connector [2], and remove the tray 2 lift-up motor [3].

4. To reinstall, reverse the order of removal.

5.6 Disassembly/reassembly procedure (Clutches)

5.6.1 Tray 1 paper feed clutch (CL3)

1. Remove the paper deed unit.
   G.5.3.2 Paper feed unit

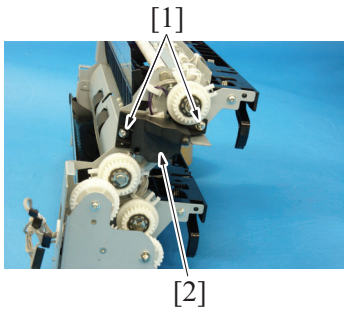

2. Remove two screws [1], and remove the cover [2].

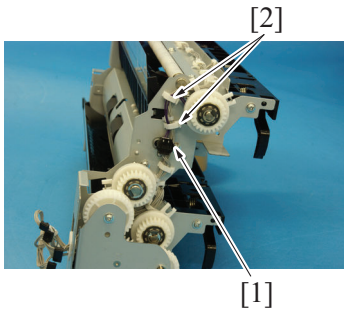

3. Disconnect the connector [1], and remove the harness from two wire saddles [2].

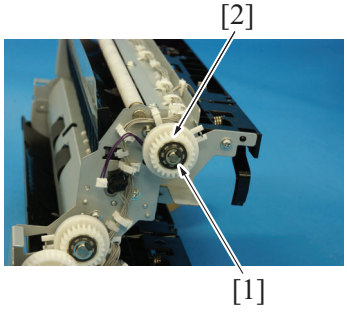

4. Remove the E-ring [1], and remove the tray 1 paper feed clutch [2].
   NOTE
   - **When mounting the tray 1 paper feed clutch, set the convex part of the stopper into the concave part of the tray 1 paper feed clutch.**

5. To reinstall, reverse the order of removal.

5.6.2 Tray 2 vertical transport clutch (CL2)

1. Remove the paper feed unit.
   G.5.3.2 Paper feed unit

2. Remove the E-ring [1].

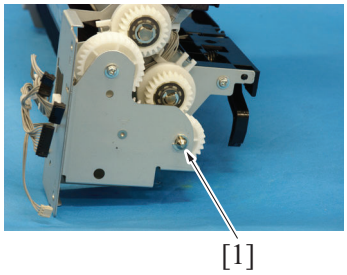

3. Remove two screws [1], and remove the gear cover [2].

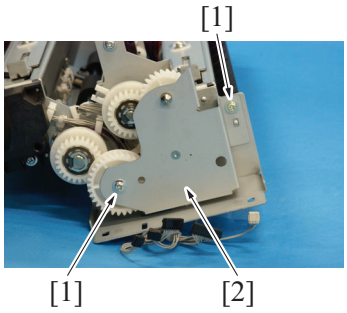

4. Remove the gear [1].

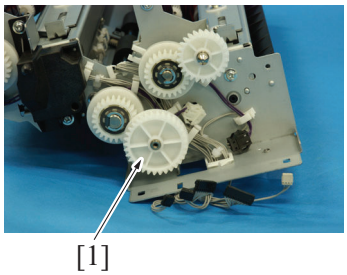

5. Disconnect the connector [1], and remove the harness from two wire saddles [2].

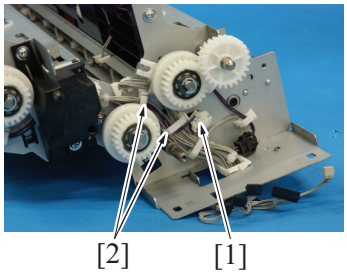

6. Remove the E-ring [1], and remove the tray 2 vertical transport clutch [2].
NOTE
- **When mounting the tray 2 vertical transport clutch, set the convex part of the stopper into the concave part of the tray 2 vertical transport clutch.**

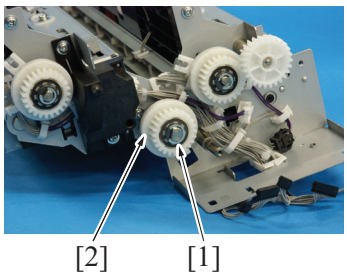

7. To reinstall, reverse the order of removal.

5.6.3 Tray 2 paper feed clutch (CL1)

1. Remove the paper feed unit.
G.5.3.2 Paper feed unit

2. Remove the E-ring [1].

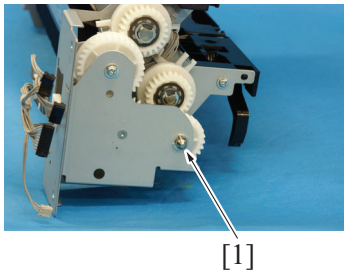

3. Remove two screws [1], and remove the gear cover [2].

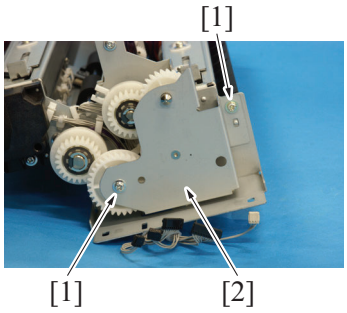

4. Remove the gear [1].

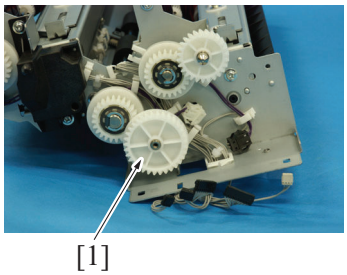

5. Remove the gear [1].

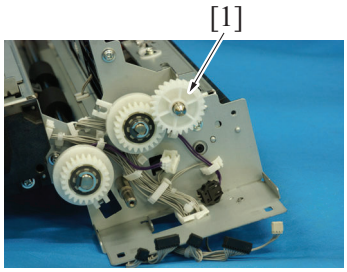

6. Disconnect the connector [1], and remove the harness from two wire saddles [2].

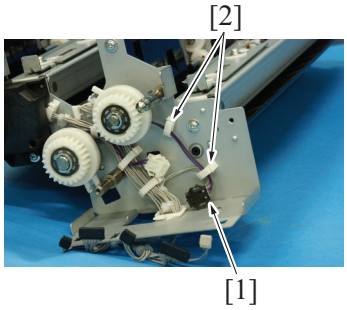

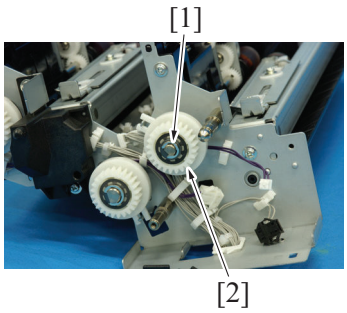

7. Remove the E-ring [1], and remove the tray 2 paper feed clutch [2].
NOTE
- **When mounting the tray 2 paper feed clutch, set the convex part of the stopper into the concave part of the tray 2 paper feed clutch.**

8. To reinstall, reverse the order of removal.

5.6.4 Bypass paper feed clutch (CL7)

1. Remoe the rear right cover.
G.5.2.18 Rear right cover

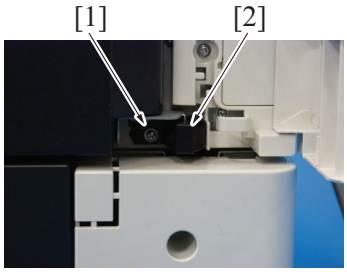

2. Remove the screw [1], and remove the right door stopper (lower section) [2].

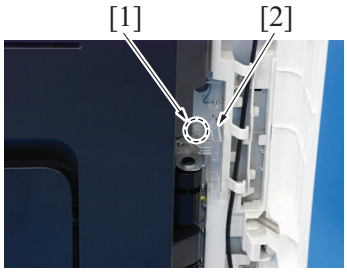

3. Remove the screw [1], and remove the connector cover [2].
4. Open the right door.

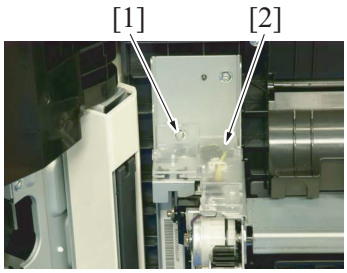

5. Remove the screw [1], and remove the connector cover [2].

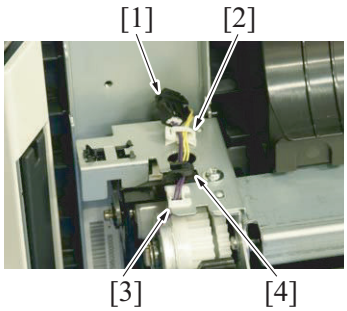

6. Disconnect the connector [1], and remove the harness from the wire saddle [2], the edge cover [3] and the harness guides [4].

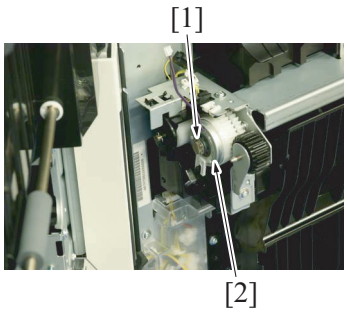

7. Remove the E-ring [1], and remove the bypass paper feed clutch [2].
NOTE
- **When mounting the bypass paper feed clutch, set the convex part of the stopper into the concave part of the bypass paper feed clutch.**

8. To reinstall, reverse the order of removal.

5.6.5 ADU transport clutch (CL6)

1. Remove the lower rear cover/1.
G.5.2.20 Lower rear cover/1
2. Remove the lower rear cover/2.
G.5.2.21 Lower rear cover/2
3. Remove the upper rear cover.
G.5.2.22 Upper rear cover
4. Open the PWB box.
G.5.3.9 How to open the PWB box

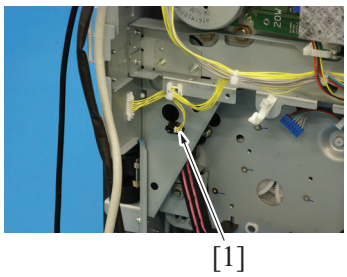

5. Disconnect the connector [1].

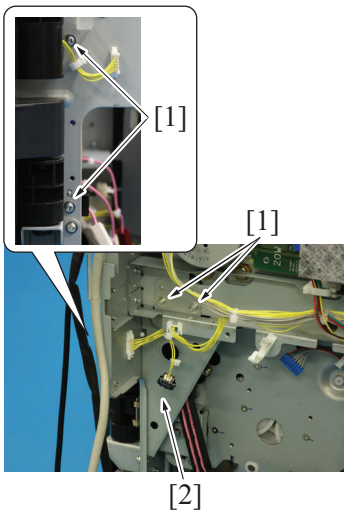

6. Remove four screws [1], and remove the metal plate [2].

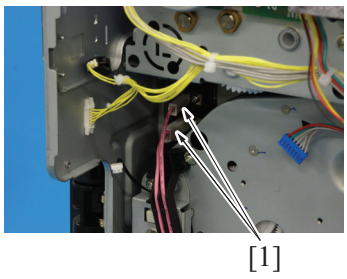

7. Remove two solderless terminals [1].

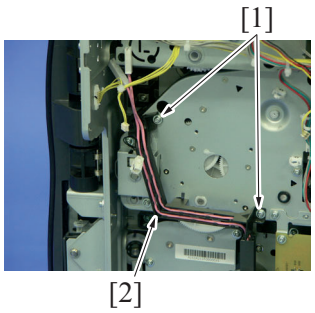

8. Remove two screws [1], and remove the harness guide [2].

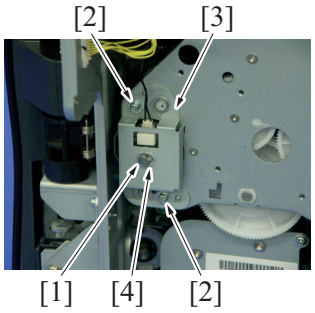

9. Remove the E-ring [1].
10. Remove two screws [2], and remove the metal plate [3] and bushing [4].

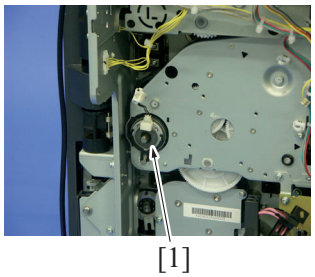

11. Remove the ADU transport clutch [1].

12. To reinstall, reverse the order of removal.

5.6.6 Registration clutch (CL4)

1. Remove the transport unit.
   G.5.3.11 Transport unit

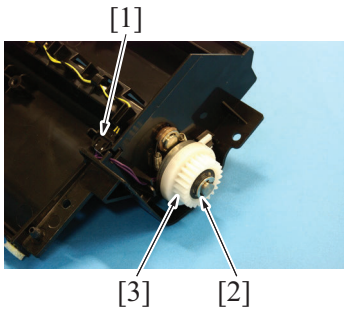

2. Remove the E-ring [2]. Disconnect the connector [1], and remove the registration clutch [3].
   NOTE
   - **When mounting the registration clutch, set the convex part of the stopper into the concave part of the registration clutch.**

3. To reinstall, reverse the order of removal.

5.6.7 Paper exit clutch (CL8)

1. Remove the fusing drive unit.
   G.5.3.12 Fusing drive unit

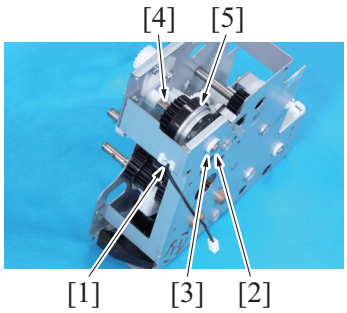

2. Remove the harness from the edge cover [1].
3. Remove the E-ring [2] and the bearing [3], and remove the 1st transfer pressure clutch [5] while pulling out the shaft [4].
   NOTE
   - **When mounting the paper exit clutch [5], set the convex part of the stopper into the concave part of the paper exit clutch.**
4. To reinstall, reverse the order of removal.

5.7 Disassembly/reassembly procedure (etc.)

5.7.1 IDC sensor shutter solenoid (SD2)

1. Remove the transport unit.
   G.5.3.11 Transport unit

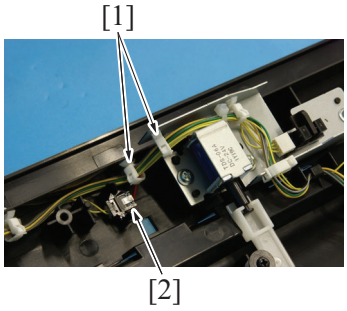

2. Disconnect the connector [2], and remove the harness from two wire saddles [1].

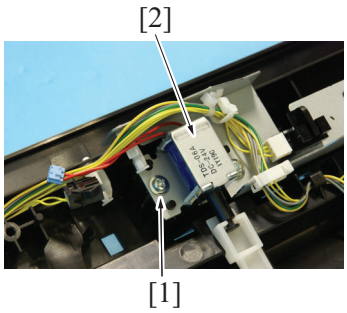

3. Remove the screw [1], and remove the IDC sensor shutter solenoid [2].
4. To reinstall, reverse the order of removal.

5.7.2 Gate switch solenoid (SD3)

1. Remove the fusing unit.
   F.6.11.1 Replacing the fusing unit
2. Remove the control panel front cover.
   G.5.2.10 Control panel front cover
3. Remove the upper right cover.
   G.5.2.19 Upper right cover

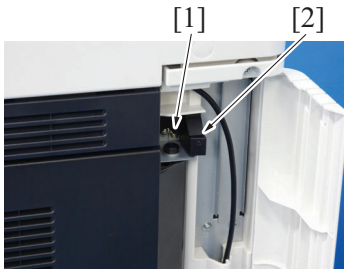

4. Remove the screw [1], and remove the right door stopper (upper section) [2].

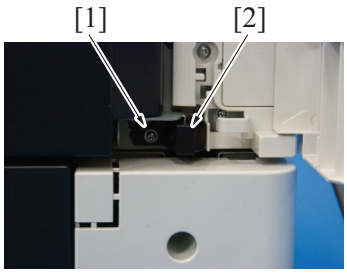

5. Remove the screw [1], and remove the right door stopper (lower section) [2].

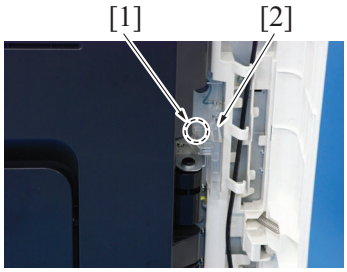

6. Remove the screw [1], and remove the connector cover [2].

7. Open the right door and regist unit.

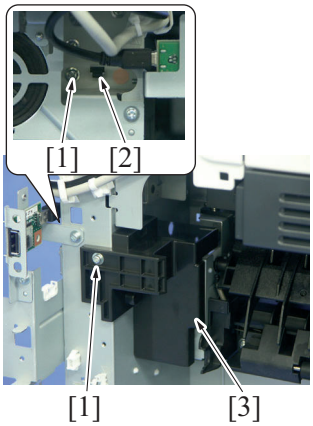

8. Remove two screws [1] and the tab [2], and remove the cover [3].

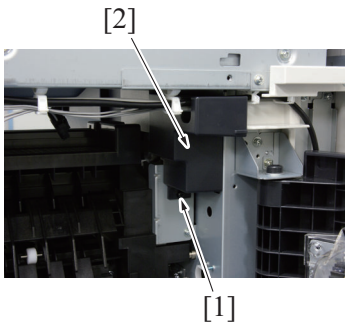

9. Remove the screw [1], and remove the cover [2].

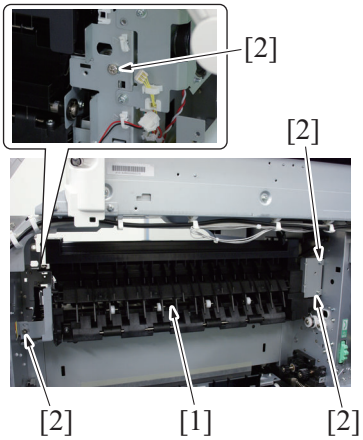

10. Remove four screws [2] of the gate switch unit [1].

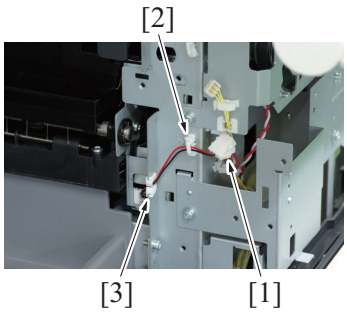

11. Disconnect the connector [1].
12. Remove the harness from the wire saddle [2] and the edge cover [3].

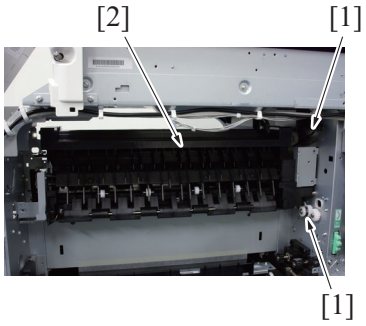

13. Remove the gate switch unit [2] as clearing two belts [1].

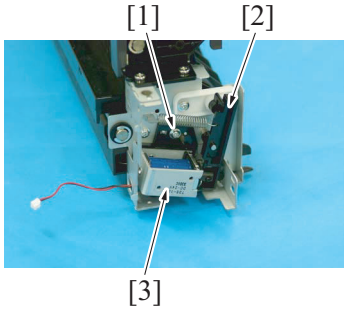

14. Remove the screw [1].
15. Remove the gate switch solenoid [3] as clearing the actuator [2].

16. To reinstall, reverse the order of removal.

5.7.3 Developing solenoid (SD4)

1. Open the PWB box.
   G.5.3.9 How to open the PWB box

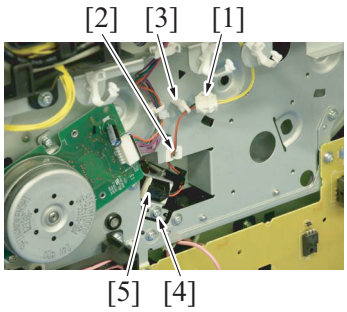

2. Disconnect the connector [1], and remove the harness from the edge cover [2] and the wire saddle [5].
3. Remove the screw [3], and remove the developing solenoid [4].

4. To reinstall, reverse the order of removal.

5.7.4 Bypass pick-up solenoid (SD1)

1. Remove the manual bypass tray unit.
   G.5.3.6 Manual bypass tray unit

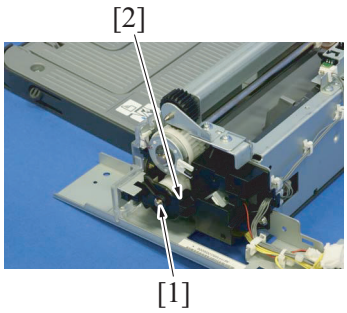

2. Remove the E-ring [1], and remove the actuator [2].

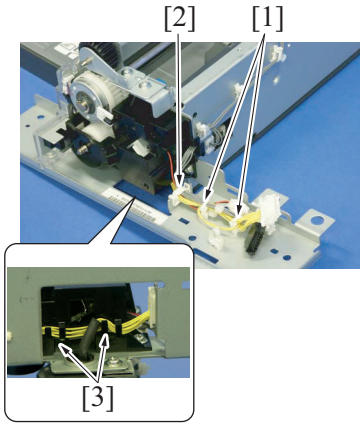

3. Remove the harness from two wire saddles [1] and the edge cover [2].
4. Remove the harness from two harness guides [3].

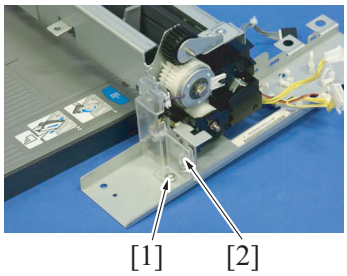

5. Remove the screw [1], and remove the cover [2].

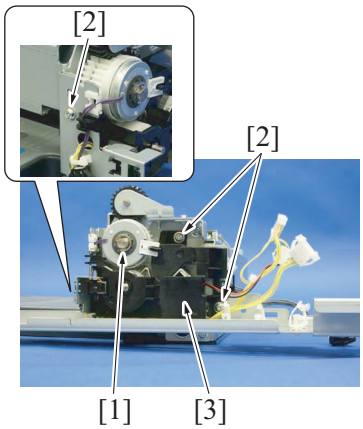

6. Remove the E-ring [1].
7. Remove three screws [2], and remove the bypass paper feed clutch drive assy [3].

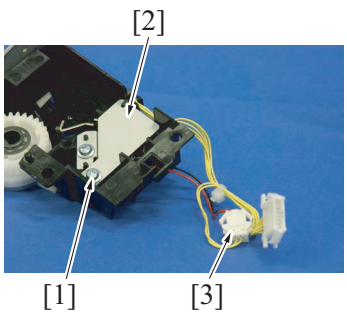

8. Remove the screw [1], and remove the cover [2].
9. Disconnect the connector [3].

10. Remove the screw [1], and remove the bypass pick-up solenoid [2].

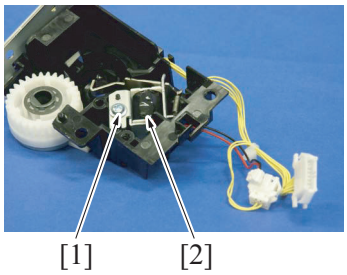

11. To reinstall, reverse the order of removal.

5.7.5 Bypass CD paper size VR (VR1)

1. Remove the manual bypass tray unit.
G.5.3.6 Manual bypass tray unit

2. Remove the E-ring [1], and remove the actuator [2].

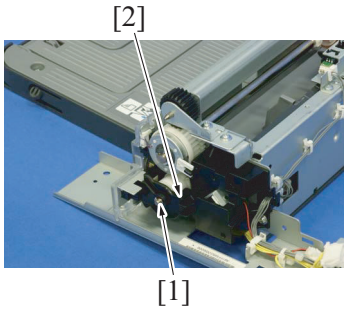

3. Remove the harness from two wire saddles [1] and the edge cover [2].
4. Remove the harness from two harness guides [3].

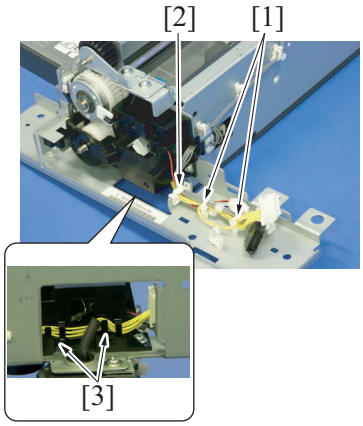

5. Remove the E-ring [1].
6. Remove three screws [2], and remove the bypass paper feed clutch drive assy [3].

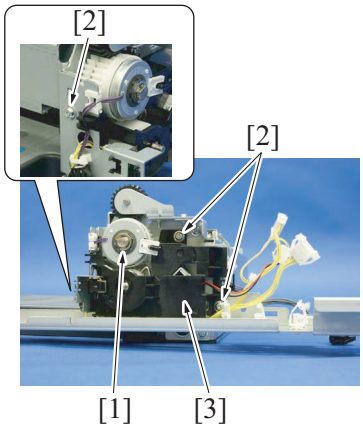

7. Remove the screw [1].

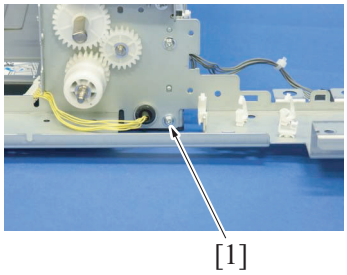

8. Remove the screw [1], and remove the hinge [2].

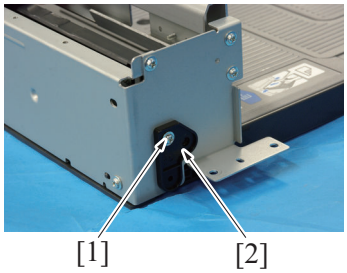

9. While pulling out the harness [1], remove the manual bypass tray [2].

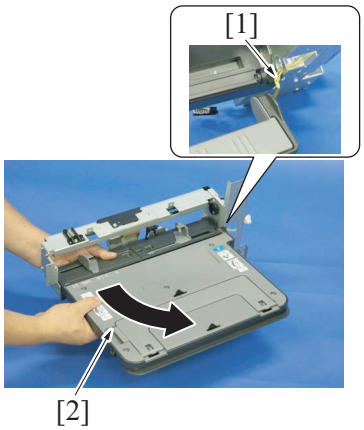

10. Remove the harness from three wire saddles [1] and two edge covers [2], and disconnect the connector [3].

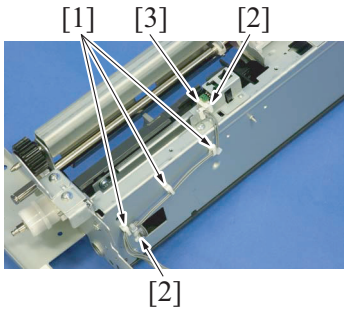

11. Remove two screws [1].

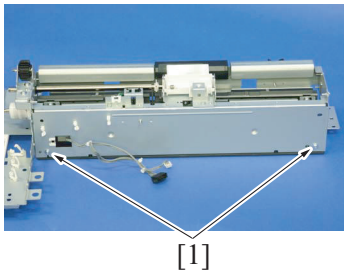

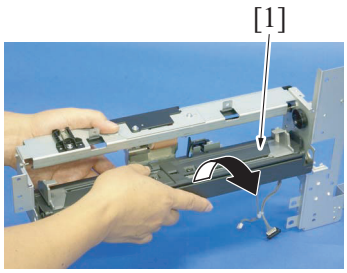

12. Remove the manual bypass tray paper guide plate [1].
NOTE
- **Be careful not to lose the spring.**

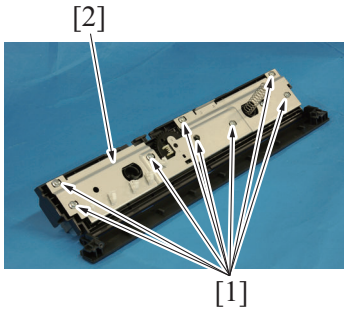

13. Remove eight screws [1], and remove the cover [2].

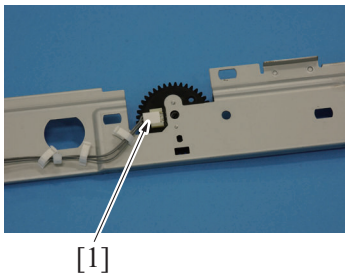

14. Disconnect the connector [1].

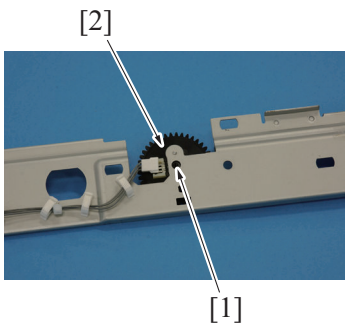

15. Remove the tab [1], and remove the gear [2].

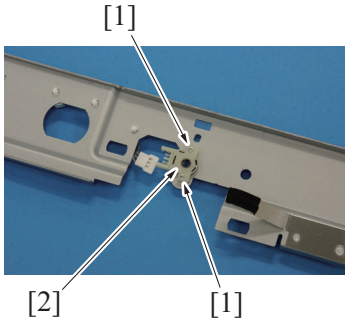

16. Remove two screws [1], and remove the bypass CD paper size VR [2].

17. To reinstall, reverse the order of removal.

5.7.6 Transfer belt cleaner cooling fan assy

1. Remove the waste toner box.
   F.6.8.1 Replacing the waste toner box
2. Remove the upper front door.
   G.5.2.13 Front door
3. Remove the lower front cover.

G.5.2.14 Lower front cover

4. Remove the front cover.
   G.5.2.15 Front cover
5. Remove the DC power supply.
   G.5.4.7 DC power supply (DCPU)
6. Remove the transfer belt.
   F.6.6.3 Replacing the transfer belt unit
7. Remove three screws [1], and remove the cover [2].

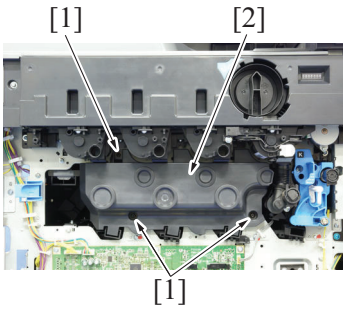

8. Remove the cover [1].

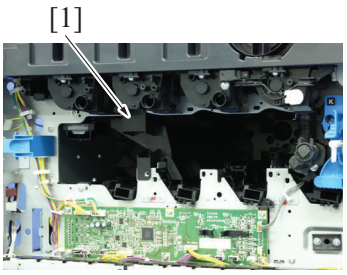

NOTE

- **When reinstalling the cover, insert the cover positioning pin [2] into the cover fixing hole [1] in the rear inside the machine.**

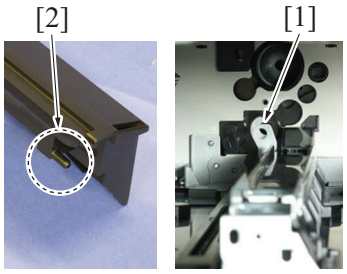

9. Remove the screw [1], and remove waste toner duct [2].

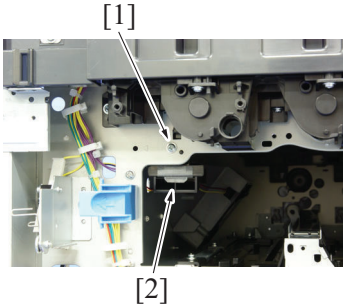

10. Disconnect the connector [1], and unhook three claws [1].

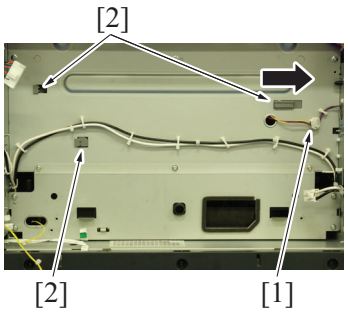

11. Remove the transfer belt cleaner cooling fan assy [1].

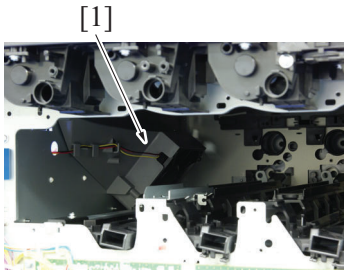

12. Remove two screws [1], Remove the transfer belt cleaner cooling fan assy [2].

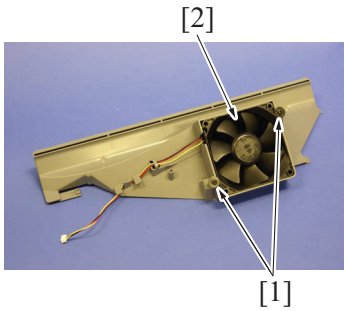

13. To reinstall, reverse the order of removal.

6. Option

6.1 Disassembly/reassembly parts list

6.1.1 KP-101

Section	Part name	Ref. page
Unit	Keypad	G.6.2.1 Keypad (KP-101)

6.1.2 UK-208

Section	Part name	Ref. page
Unit	Upgrade kit	G.6.3.1 Upgrade kit (UK-208)

6.1.3 DF-701

Section	Part name	Ref. page
Exterior parts	Front cover	G.6.4.1 Front cover (DF-701)
	Rear cover	G.6.4.2 Rear cover (DF-701)
	Left cover unit	G.6.4.3 Left cover unit (DF-701)
Units	Dual scan document feeder	G.6.4.4 Dual scan document feeder (DF-701)
	Front side glass cleaning roller unit	G.6.4.5 Front side glass cleaning roller unit (DF-701)
	Back side glass cleaning roller unit	G.6.4.6 Back side glass cleaning roller unit (DF-701)
	CIS module (CIS)	G.6.4.7 CIS module (CIS) (DF-701)
Board and etc.	DF control board (DFCB)	G.6.4.8 DF control board (DFCB) (DF-701)
	Document width sensor (VR1)	G.6.4.9 Document width sensor (VR1) (DF-701)
	CIS power supply (CISPU)	G.6.4.10 CIS power supply (CISPU) (DF-701)
	Dual scan image processing board (DSIPB)	G.6.4.11 Dual scan image processing board (DSIPB) (DF-701)
Others	Document reading motor (M1)	G.6.4.12 Document reading motor (M1) (DF-701)
	Document feed motor (M2)	G.6.4.13 Document feed motor (M2) (DF-701)
	Registration motor (M3)	G.6.4.14 Registration motor (M3) (DF-701)
	Reading roller release motor (M4)	G.6.4.15 Reading roller release motor (M4) (DF-701)
	CIS cleaning motor (M5)	G.6.4.16 CIS cleaning motor (M5) (DF-701)
	Document reading glass cleaning motor (M6)	G.6.4.17 Document reading glass cleaning motor (M6) (DF-701)
	DF cooling fan motor (FM1)	G.6.4.18 DF cooling fan motor (FM1) (DF-701)
	Stamp unit	G.6.4.19 Stamp unit (SP-501)
	Spare TX Marker Stamp 2	G.6.4.20 Stamp (SP-501)

6.1.4 DF-624

Section	Part name	Ref. page
Exterior parts	Front cover	G.6.5.1 Front cover (DF-624)
	Rear cover	G.6.5.2 Rear cover (DF-624)
	Left cover unit	G.6.5.3 Left cover unit (DF-624)
Units	Reverse automatic document feeder	G.6.5.4 Reverse automatic document feeder (DF-624)
	Glass cleaning roller unit	G.6.5.5 Glass cleaning roller unit (DF-624)
Board and etc.	DF control board (DFCB)	G.6.5.6 DF control board (DFCB) (DF-624)
	Document width size sensor (VR1)	G.6.5.7 Document width size sensor (VR1) (DF-624)
Others	Document reading motor (M1)	G.6.5.8 Document reading motor (M1) (DF-624)
	Document feed motor (M2)	G.6.5.9 Document feed motor (M2) (DF-624)
	Registration motor (M3)	G.6.5.10 Registration motor (M3) (DF-624)
	Glass cleaning motor (M4)	G.6.5.11 Glass cleaning motor (M4) (DF-624)
	Reading roll release motor (M5)	G.6.5.12 Reading roll release motor (M5) (DF-624)
	DF cooling fan motor (FM1)	G.6.5.13 DF cooling fan motor (FM1) (DF-624)
	Stamp unit	G.6.5.15 Stamp unit (SP-501)
	Spare TX Marker Stamp 2	G.6.5.16 Stamp (SP-501)

6.1.5 PC-110/PC-210

Section	Part name	Ref. page
Exterior parts	Right door	G.6.6.1 Right door (PC-110/PC-210)
	Rear right cover	G.6.6.2 Rear right cover (PC-110/PC-210)
	Rear cover	G.6.6.3 Rear cover (PC-110/PC-210)

Section	Part name	Ref. page
	Tray 3, Tray 4, Storage box	G.6.6.4 Tray 3, tray 4, storage box (PC-110/PC-210)
Units	Paper feed cabinet	G.6.6.5 Paper feed cabinet (PC-110/PC-210)
	Tray 3 paper feed unit	G.6.6.6 Tray 3 paper feed unit (PC-110/PC-210)
	Tray 4 paper feed unit	G.6.6.7 Tray 4 paper feed unit (PC-210)
Boards	PC control board (PCCB)	G.6.6.8 PC control board (PCCB) (PC-110/PC-210)
	Tray 3 paper empty indicator board (PEIB/3)	G.6.6.9 Tray 3 paper empty indicator board (PEIB/3), tray 4 paper empty indicator board (PEIB/4) (PC-110/PC-210)
	Tray 4 paper empty indicator board (PEIB/4)	
	Tray 3 FD paper size board (FDPSB/3)	G.6.6.10 Tray 3 FD paper size board (FDPSB/3), tray 4 FD paper size board (FDPSB/4) (PC-110/PC-210)
	Tray 4 FD paper size board (FDPSB/4)	
	Tray 3 CD paper size board (CDPSB/3)	G.6.6.11 Tray 3 CD paper size board (CDPSB/3) (PC-110/PC-210)
	Tray 4 CD paper size board (CDPSB/4)	G.6.6.12 Tray 4 CD paper size board (CDPSB/4) (PC-210)
Motors	Tray 3 paper feed motor (M111)	G.6.6.13 Tray 3 paper feed motor (M111), tray 4 paper feed motor (M121) (PC-110/PC-210)
	Tray 4 paper feed motor (M121)	
	Tray 3 vertical transport motor (M112)	G.6.6.14 Tray 3 vertical transport motor (M112), tray 4 vertical transport motor (M122) (PC-110/PC-210)
	Tray 4 vertical transport motor (M122)	
	Tray 3 lift-up motor (M113)	G.6.6.15 Tray 3 lift-up motor (M113), tray 4 lift-up motor (M123) (PC-110/PC-210)
	Tray 4 lift-up motor (M123)	

6.1.6 PC-410

Section	Part name	Ref. page
Exterior parts	Right door	G.6.7.1 Right door (PC-410)
	Rear right cover	G.6.7.2 Rear right cover (PC-410)
	Rear cover	G.6.7.3 Rear cover (PC-410)
	Paper feed tray	G.6.7.4 Paper feed tray (PC-410)
Units	Paper feed cabinet	G.6.7.5 Paper feed cabinet (PC-410)
	Paper feed unit	G.6.7.6 Paper feed unit (PC-410)
Boards	PC control board (PCCB)	G.6.7.7 PC control board (PCCB) (PC-410)
	Tray 3 paper empty indicator board (PEIB/3)	G.6.7.8 Tray 3 paper empty indicator board (PEIB/3) (PC-410)
Motors	Paper feed motor (M131)	G.6.7.9 Paper feed motor (M131) (PC-410)
	Vertical transport motor (M132)	G.6.7.10 Vertical transport motor (M132) (PC-410)
	Elevator motor (M134)	G.6.7.11 Elevator motor (M134) (PC-410)
	Shifter motor (M133)	G.6.7.12 Shifter motor (M133) (PC-410)
etc.	Wire	G.6.7.13 Wire (PC-410)

6.1.7 JS-506

Section	Part name	Ref. page
Exterior parts	Exit tray 1	G.6.8.1 Exit tray 1 (JS-506)
	Exit tray 2	G.6.8.2 Exit tray 2 (JS-506)
Units	Job separator	G.6.8.3 Job separator (JS-506)
	Sensor unit	G.6.8.4 Sensor unit (JS-506)
Boards	JS control board (JSCB)	G.6.8.5 JS control board (JSCB) (JS-506)
Motors	Tray shift motor (M1)	G.6.8.6 Tray shift motor (M1) (JS-506)

6.1.8 FS-534

Section	Part name	Ref. page
Exterior parts	Rear cover	G.6.9.1 Rear cover (FS-534)
	Front door	G.6.9.2 Front door (FS-534)
	Front upper cover	G.6.9.3 Front upper cover (FS-534)
Units	Finisher	G.6.9.4 Finisher (FS-534)
	Horizontal transport unit	G.6.9.5 Horizontal transport unit (FS-534)
	Stapler unit	G.6.9.6 Stapler unit (FS-534)
	Sensor unit	G.6.9.7 Sensor unit (FS-534)
Boards	FS control board (FSCB)	G.6.9.8 FS control board (FSCB) (FS-534)
Motors	RU transport motor (M1)	G.6.9.9 RU transport motor (M1) (FS-534)
	FNS entry transport motor (M2)	G.6.9.10 FNS entry transport motor (M2) (FS-534)

Section	Part name	Ref. page
	FNS discharge motor (M3)	G.6.9.11 FNS discharge motor (M3) (FS-534)
	Receiving roller retraction motor (M4)	G.6.9.12 Receiving roller retraction motor (M4) (FS-534)
	FNS paddle motor (M5)	G.6.9.13 FNS paddle motor (M5) (FS-534)
	Trailing edge stopper motor (M6)	G.6.9.14 Trailing edge stopper motor (M6) (FS-534)
	Alignment motor/front (M7)	G.6.9.15 Alignment motor/front (M7) (FS-534)
	Alignment motor/rear (M8)	G.6.9.16 Alignment motor/rear (M8) (FS-534)
	Pre-eject drive motor (M9)	G.6.9.17 Pre-eject drive motor (M9) (FS-534)
	Bundle eject motor (M10)	G.6.9.18 Bundle eject motor (M10) (FS-534)
	Main tray up/down motor (M11)	G.6.9.19 Main tray up/down motor (M11) (FS-534)
	Paper receiving control motor (M12)	G.6.9.20 Paper receiving control motor (M12) (FS-534)
	Side stapler movement motor (M13)	G.6.9.21 Side stapler movement motor (M13) (FS-534)

6.1.9 PK-520

Section	Part name	Ref. page
Units	Punch kit	G.6.10.1 Punch kit (PK-520)

6.1.10 SD-511

Section	Part name	Ref. page
Exterior parts	Front cover	G.6.11.1 Front cover (SD-511)
Units	Saddle unit	G.6.11.2 Saddle unit (SD-511)
	Paper exit tray	G.6.11.3 Paper exit tray (SD-511)
	Staple unit	G.6.11.4 Staple unit (SD-511)
Boards	SD drive board (SDDB)	G.6.11.5 SD drive board (SDDB) (SD-511)
Mortors	SD transport motor (M1)	G.6.11.6 SD transport motor (M1) (SD-511)
	Paper discharge control motor (M2)	G.6.11.7 Paper discharge control motor (M2) (SD-511)
	Alignment motor (M3)	G.6.11.8 Alignment motor (M3) (SD-511)
	Stopper drive motor (M4)	G.6.11.9 Stopper drive motor (M4) (SD-511)
	Center fold roller motor (M5)	G.6.11.10 Center fold roller motor (M5) (SD-511)
	Tri-folding guide motor (M6)	G.6.11.11 Tri-folding guide motor (M6) (SD-511)
	SD paddle motor (M7)	G.6.11.12 SD paddle motor (M7) (SD-511)
	Center fold guide motor (M8)	G.6.11.13 Center fold guide motor (M8) (SD-511)
	Center fold knife motor (M9)	G.6.11.14 Center fold knife motor (M9) (SD-511)
etc.	Stopper solenoid (SD1)	G.6.11.15 Stopper solenoid (SD1) (SD-511)

6.1.11 FS-533

Section	Part name	Ref. page
Exterior parts	Front cover	G.6.12.1 Front cover (FS-533)
	Upper cover	G.6.12.2 Upper cover (FS-533)
	Rear cover	G.6.12.3 Rear cover (FS-533)
Units	Finisher	G.6.12.4 Finisher (FS-533)
	Stapler unit	G.6.12.5 Stapler unit (FS-533)
	Paper exit tray unit	G.6.12.6 Paper exit tray unit (FS-533)
Boards	FS control board (FSCB)	G.6.12.7 FS control board (FSCB) (FS-533)
	Stapler relay board (STREYB)	G.6.12.8 Stapler relay board (STREYB) (FS-533)
Motors	Paper conveyance motor (M101)	G.6.12.9 Paper conveyance motor (M101) (FS-533)
	Paper exit motor (M102)	G.6.12.10 Paper exit motor (M102) (FS-533)
	Alignment roller motor (M103)	G.6.12.11 Alignment roller motor (M103) (FS-533)
	Exit roller lift up motor (M104)	G.6.12.12 Exit roller lift up motor (M104) (FS-533)
	Alignment motor/F (M105)	G.6.12.13 Alignment motor/F (M105), Alignment motor/R (M106) (FS-533)
	Alignment motor/R (M106)	
	Stapler movement motor (M107)	G.6.12.14 Stapler movement motor (M107) (FS-533)
	Tray lift up motor (M109)	G.6.12.15 Tray lift up motor (M109) (FS-533)
etc.	Paper surface detect solenoid (SD101)	G.6.12.16 Paper surface detect solenoid (SD101) (FS-533)
	Batch solenoid (SD102)	G.6.12.17 Batch solenoid (SD102) (FS-533)
	Paper exit roller solenoid (SD103)	G.6.12.18 Paper exit roller solenoid (SD103) (FS-533)

Section	Part name	Ref. page
	Paper exit paddle	G.6.12.19 Paper exit paddle (FS-533)

6.1.12 PK-519

Section	Part name	Ref. page
Units	Punch kit	G.6.13.1 Punch kit (PK-519)
Boards	PK control board (PKCB)	G.6.13.2 PK control board (PKCB) (PK-519)
Motors	Punch motor (M201)	G.6.13.3 Punch motor (M201) (PK-519)

6.1.13 FK-508

Section	Part name	Ref. page
Units	FAX board (line 3), FAX board (line 4)	G.6.14.1 FAX board (line 3), FAX board (line 4) (FK-508)

6.1.14 FK-511

Section	Part name	Ref. page
Units	FAX kit (line 1)	G.6.15.1 FAX Kit (Line1), FAX Kit (Line2) (FK-511)
	FAX kit (line 2)	

6.2 Disassembly/reassembly procedure (KP-101)

6.2.1 Keypad (KP-101)

1. Remove two screws [1], unhook four claws [2], and remove the cover [3].

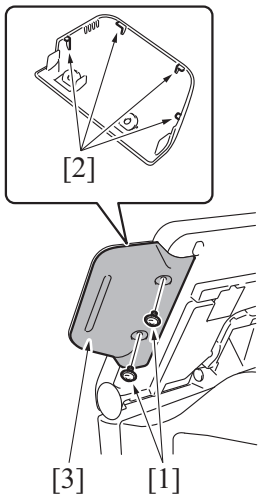

2. Disconnect the connector [1] and remove the keypad [2].

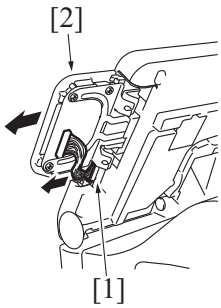

3. To reinstall, reverse the order of removal.

6.3 Disassembly/reassembly procedure (UK-208)

6.3.1 Upgrade kit (UK-208)

1. Remove the scanner right cover.
   G.5.2.2 Scanner right cover
2. Remove the scanner left cover.
   G.5.2.4 Scanner left cover
3. Remove the scanner rear cover.
   G.5.2.1 Scanner rear cover
4. Remove the upper right cover.
   G.5.2.19 Upper right cover

5. Remove the control panel right cover.
   G.5.2.8 Control panel right cover
6. Remove the control panel left cover/1.
   G.5.2.6 Control panel left cover/1
7. Remove the control panel upper cover.
   G.5.2.9 Control panel upper cover
8. Remove the scanner front cover.
   G.5.2.3 Scanner front cover
9. Remove the lower rear cover/1.
   G.5.2.20 Lower rear cover/1
10. Remove the lower rear cover/2.
    G.5.2.21 Lower rear cover/2
11. Remove the upper rear cover.
    G.5.2.22 Upper rear cover
12. Open the right door.

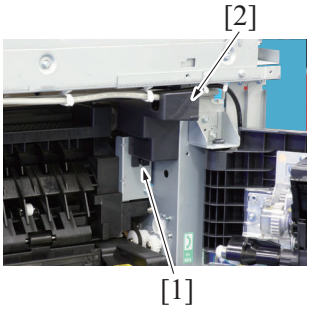

13. Remove the screw [1], and remove the cover [2].

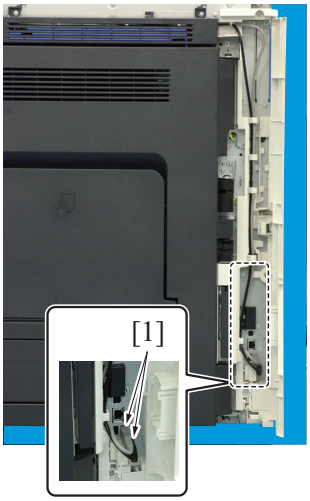

14. Disconnect two USB cables [1].
    NOTE
    - **Be sure to mount the USB cable [1] without any loosening.**

15. Remove the rear right cover.
    G.5.2.18 Rear right cover

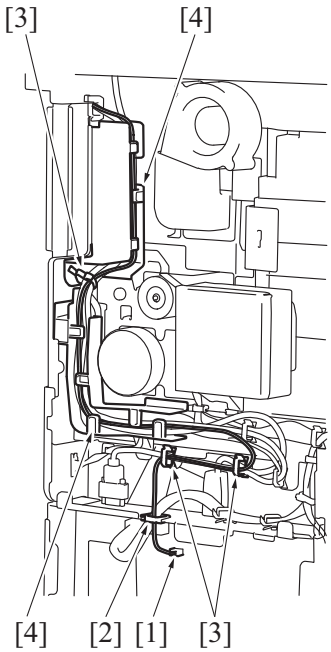

16. Disconnect the connector [1], and remove the harness from the edge cover [2], three wire saddles [3] and two harness guides [4].

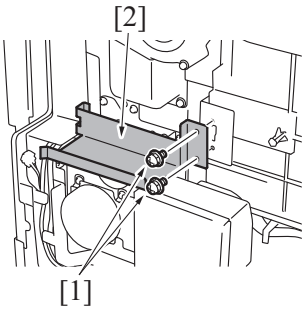

NOTE

- **Remove two screws [1], and remove the metal plate [2]. (Only for Europe)**

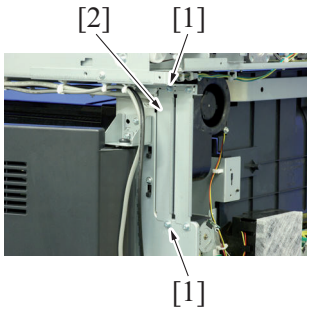

17. Remove two screws [1], and remove the metal plate [2].

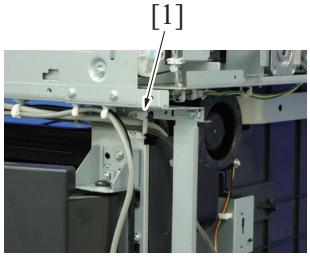

18. Remove the harness of upgrade kit from the wire saddle [1].

19. Remove the harness of upgrade kit and the USB cable from six wire saddles [1] and two wire saddles [2].

NOTE

- **Be sure to mount with only the USB cable being stored in the wire saddle [2].**
- **Be sure to mount without any loosening on the harness and the USB cable in the area shown in the illustration.**

NOTE

- **When reinstalling the harness, fix the harness of the wireless connection kit to the scanner unit using the aluminum tape [1] (part number: A2YU PPE9##) as illustrated.**
- **Do not reuse the aluminum tape that has been peeled off.**
- **Affix the aluminum tape with reference to the mark-off line [2] on the scanner unit.**

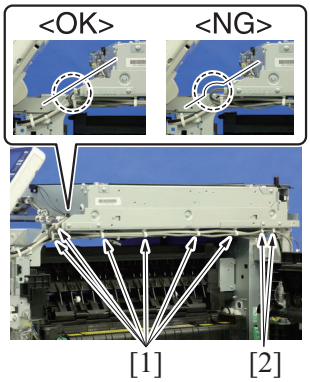

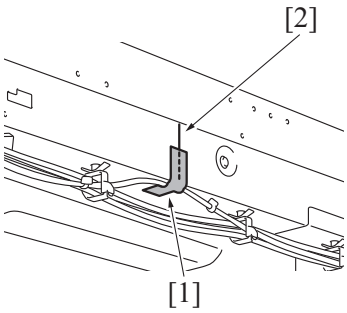

20. Remove two screws [1], and remove the upgrade kit [2].

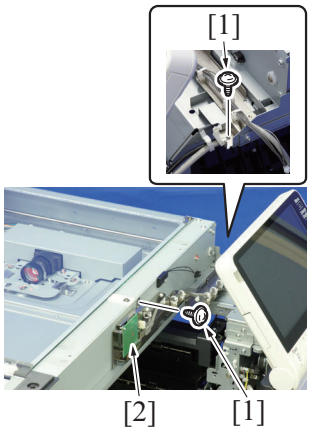

21. To reinstall, reverse the order of removal.

6.4 Disassembly/reassembly procedure (DF-701/SP-501)

6.4.1 Front cover (DF-701)

1. Open the dual scan document feeder.

2. Remove two screws [1] and remove the front cover [2].



3. Reinstall the above parts following the removal steps in reverse.

6.4.2 Rear cover (DF-701)

1. Open the dual scan document feeder.

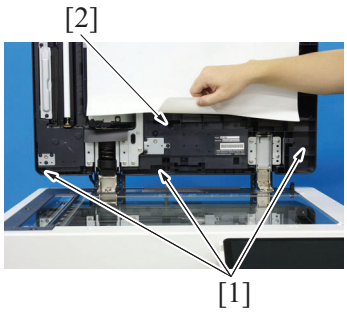

2. Remove three screws [1].
3. While peeling off the mat, remove the screw [2].
   NOTE
   - **If the dual scan document feeder is set to be lifted up at angles up to 60 degrees due to the set position of the stopper for the hinge, change the set position to the lower side so that the dual scan document feeder can be opened completely.**

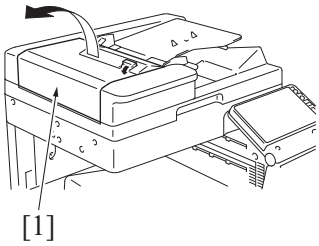

4. Open the left cover [1].

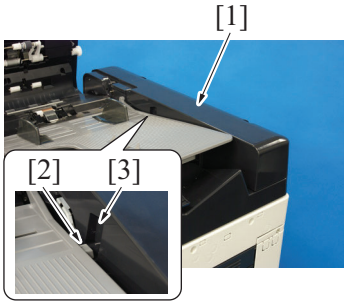

5. Remove the rear cover [1].
   NOTE
   - **For mounting the rear cover, mount it so that the protrusion [2] of the document feed tray will fit to the groove [3] on the rear cover.**

6. Reinstall the above parts following the removal steps in reverse.

6.4.3 Left cover unit (DF-701)

1. Remove the rear cover.
   G.6.4.2 Rear cover (DF-701)

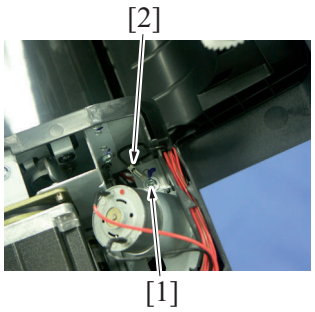

2. Remove the screw [1], and remove the ground earth [2] from the harness guide.

3. Disconnect the connector [1], and remove the harness from the harness guide [2].

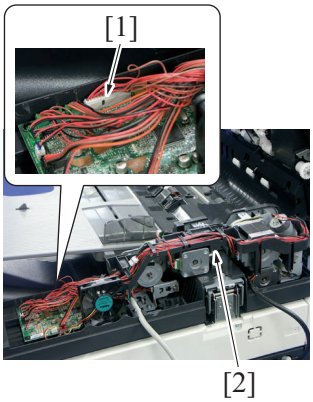

4. Remove the screw [1], and remove the shaft [2].

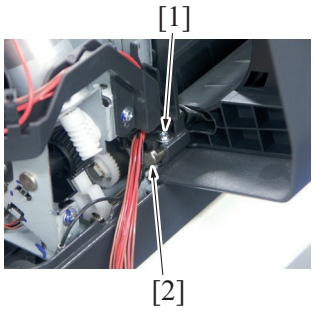

5. Remove the screw [1].
6. Remove the left cover unit [3] as shown in the illustration while pressing the harness into the hole [2] shown in the illustration.

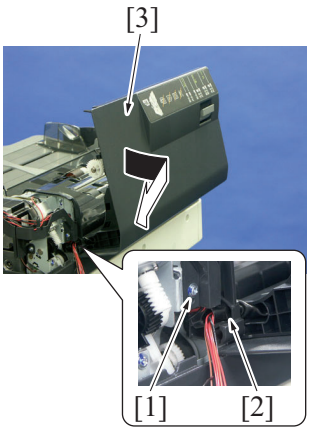

7. To reinstall, reverse the order of removal.

6.4.4 Dual scan document feeder (DF-701)

1. Remove two hinge covers [1].

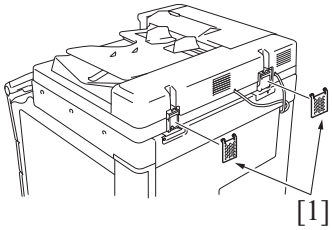

2. Remove the screws [1], and remove the DF cable cover [2] from the back of the main body.

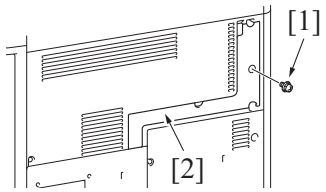

3. Remove six screws [1], and remove the lower rear cover/1 [2] from the back of the main body.

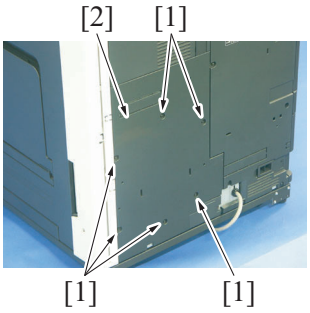

4. Pull the cable [1] to remove it from the main body.

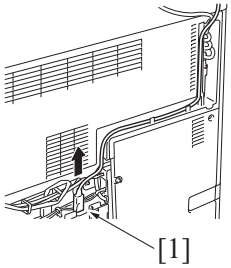

5. Remove the cable tie [1], and disconnect three connectors [2].

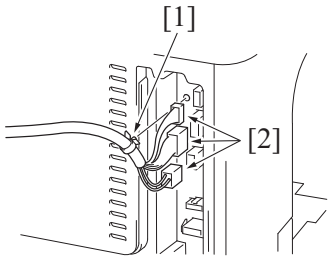

6. Open the dual scan document feeder.
NOTE
- **If the dual scan document feeder is set to be lifted up at angles up to 60 degrees due to the set position of the stopper for the hinge, change the set position to the lower side so that the dual scan document feeder can be opened completely.**

7. Remove two screws [1].

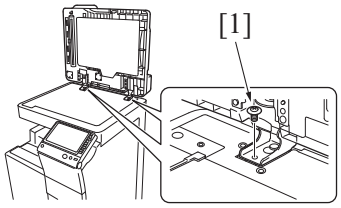

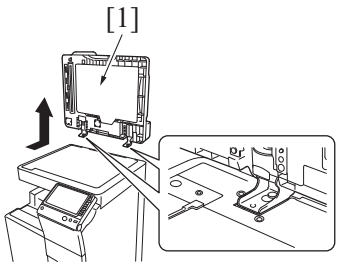

8. Remove the dual scan document feeder [1].

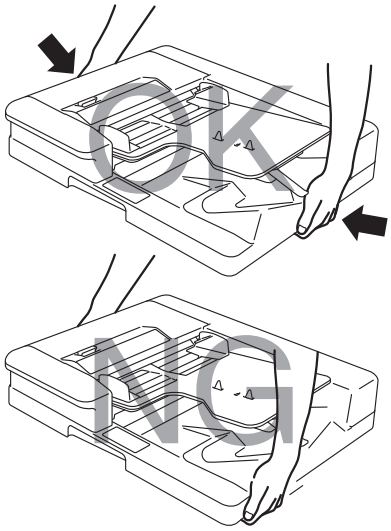

NOTE

- **When carrying the dual scan document feeder, be sure to hold onto the specified positions. The feeder main body can be distorted if held at inappropriate positions.**
- **After removing the dual scan document feeder from the machine, place it on the floor or the like as shown in the illustration.**

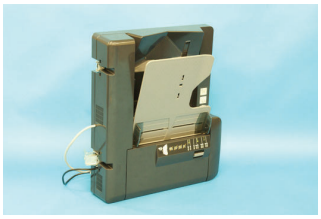

9. Reinstall the above parts following the removal steps in reverse.

6.4.5 Front side glass cleaning roller unit (DF-701)

1. Remove the front cover.
   G.6.4.1 Front cover (DF-701)
2. Remove the dual scan document feeder.
   G.6.4.4 Dual scan document feeder (DF-701)

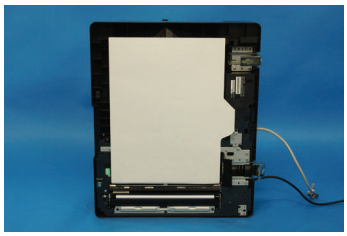

3. Place the dual scan document feeder vertically as shown in the illustration.

4. Remove the C-clip [1] and the bearing [2].

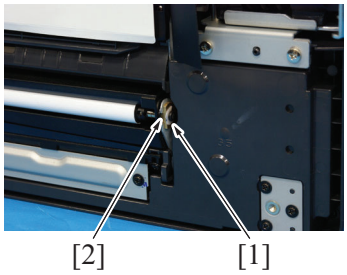

5. Remove the C-clip [1], and shift the bearing [2], and remove the belt [3].
6. Remove the front side glass cleaning roller unit [4].

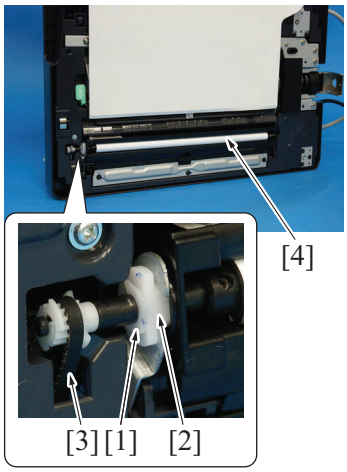

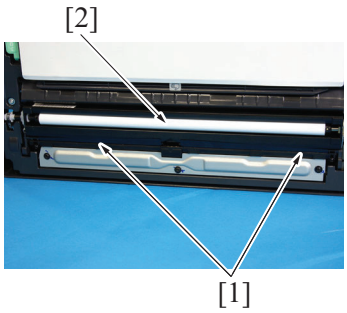

NOTE

- **When installing the front side glass cleaning roller unit [2], make sure that the transparent sheets [1] are outside of the front side glass cleaning roller unit [2].**

7. Reinstall the above parts following the removal steps in reverse.

NOTE

- **When installing the front side glass cleaning roller unit, the following adjustment is necessary.**
  - **Adjust the actuator [1] so that it is positioned where it blocks the light of the document reading glass cleaning sensor [2], and install the belt.**

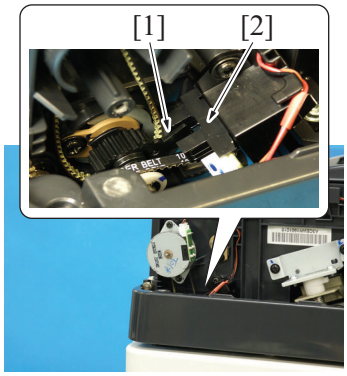

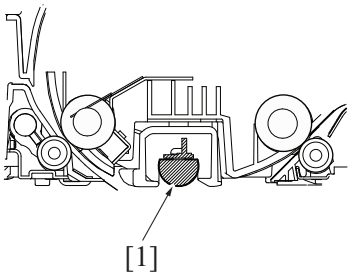

- **After completing the above adjustment, when you turn ON the main power switch, make sure that the shaft [1] is at the correct position (home position).**

6.4.6 Back side glass cleaning roller unit (DF-701)

1. Open the dual scan document feeder.

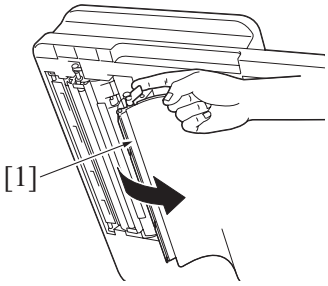

2. Open the opening and closing guide [1].

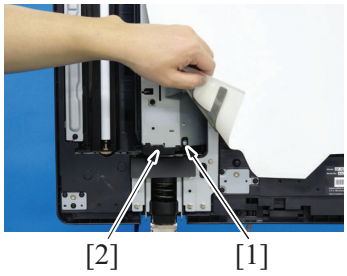

3. While peeling off the mat, remove the screw [1], and while opening the opening and closing guide, remove the cover [2].

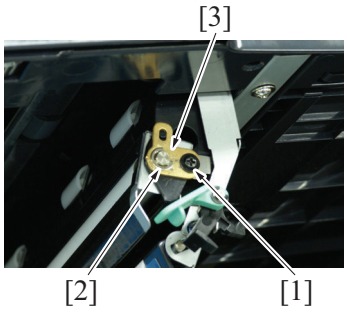

4. Remove the screw [1] and E-ring [2], and remove the bearing [3].

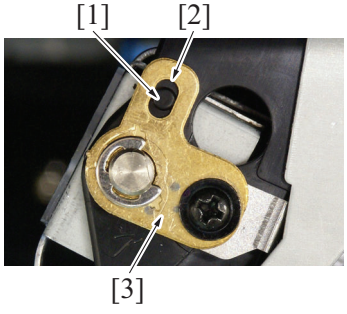

NOTE

- **When installing the bearing [3], place the dowel [1] in the middle of the slot [2].**

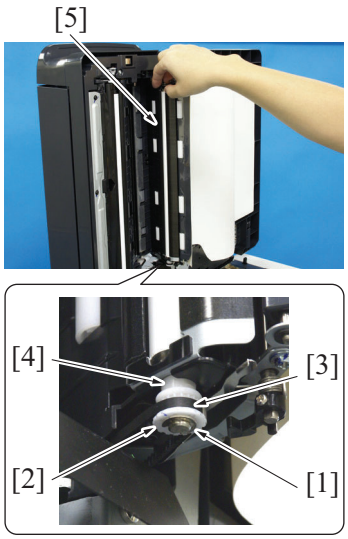

5. Remove the E-ring [1].
6. Remove the gear [2], and remove the belt [3].
7. Remove the bearing [4].
8. Remove the back side glass cleaning roller unit [5].

9. Reinstall the above parts following the removal steps in reverse.

NOTE

- **When installing the back side glass cleaning roller unit, the following adjustment is necessary.**
  - **Align the D cut surface [2] of the shaft with the lines [1] marked on the bushing.**

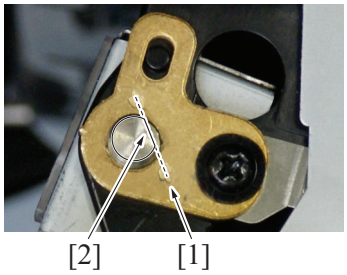

  - **When installing the belt, align the line [1] on the pulley and the line [2] on the transport guide.**

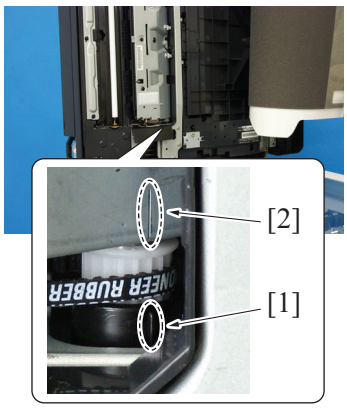

6.4.7 CIS module (CIS) (DF-701)

1. Remove the front cover.
   G.6.4.1 Front cover (DF-701)
2. Remove the rear cover.
   G.6.4.2 Rear cover (DF-701)

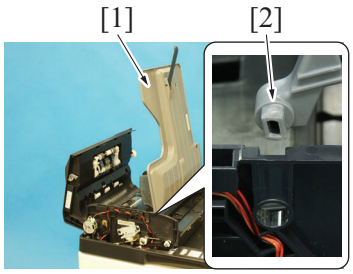

3. Lift up the document feed tray [1].
4. Remove the claw [2] at the front side, and set the document feed tray [1] off the working area.

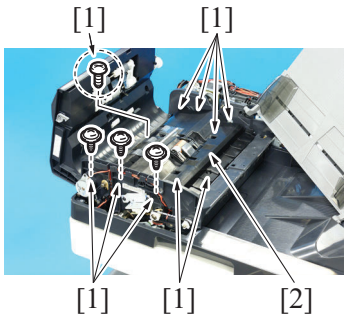

5. Remove 10 screws [1], and remove the transport guide [2].
NOTE
- **Use care when mounting the screw in the dashed circle [1] (one on the left when looking from the front) since it is different from other nine screws [1].**

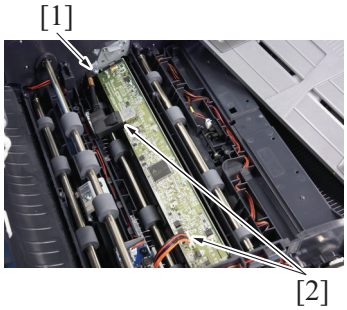

6. Remove the screw [1], and disconnect two connectors [2].

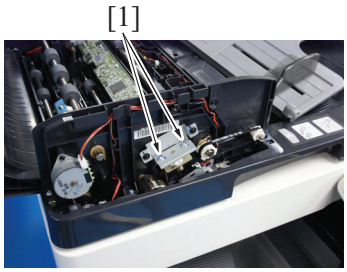

7. Remove two screws (front side) [1].

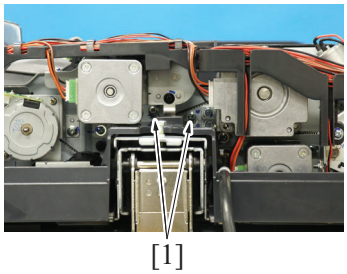

8. Remove two screws (rear side) [1].

9. Remove the CIS module [1] as shown in the illustration.

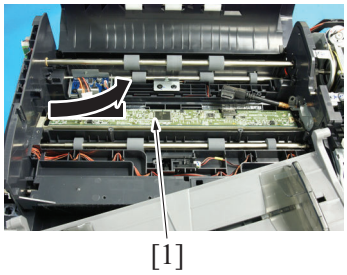

10. Remove the E-ring [1] on the right and left and remove the metal set [2].

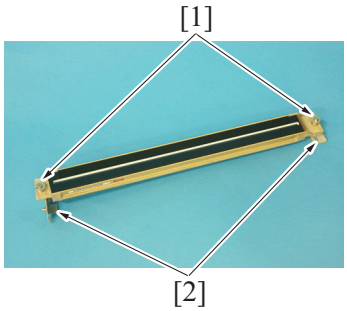

11. Reinstall the above parts following the removal steps in reverse.

NOTE

- **Be sure to perform the following steps after the CIS module has been replaced with a new one.**
- **Adjust the back side skew feed on the ADF.**
  I.17.1.3 Adjusting back side skew feed on ADF
- **Execute [Service Mode] -> [System 2] -> [CCD Calibration].**
  I.11.15.7 CCD Calibration
- **Execute [Service Mode] -> [System 2] -> [Line Mag Setting].**
  I.11.15.11 Line Mag Setting
- **Execute [Service Mode] -> [ADF] -> [Auto Stop Position Adjustment].**
  I.11.20.3 Auto Stop Position Adjustment
- **Execute [Service Mode] -> [ADF] -> [FD-Mag. Adj. (B)].**
  I.11.20.12 FD-Mag. Adj. (B)
- **Execute [Service Mode] -> [ADF] -> [Main Scanning Direction Zoom].**
  I.11.20.13 Main Scanning Direction Zoom

6.4.8 DF control board (DFCB) (DF-701)

1. Remove the rear cover.
   G.6.4.2 Rear cover (DF-701)

2. Disconnect all the seventeen connectors from the DF control board.
3. Remove four screws [1], and remove the DF control board [2].

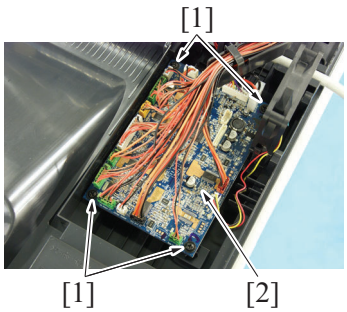

4. Reinstall the above parts following the removal steps in reverse.

NOTE

- **Be sure to perform the following steps after the DF control board has been replaced with a new one.**
- **Install the firmware.**
- **Execute [Service Mode] -> [ADF] -> [Original Tray Width].**
  I.11.20.6 Original Tray Width
- **Execute [Service Mode] -> [ADF] -> [Mixed original Size adjustment].**
  I.11.20.10 Mixed original size adjustment

6.4.9 Document width sensor (VR1) (DF-701)

1. Remove the rear cover
   G.6.4.2 Rear cover (DF-701)

2. Lift up the document feed tray [1].

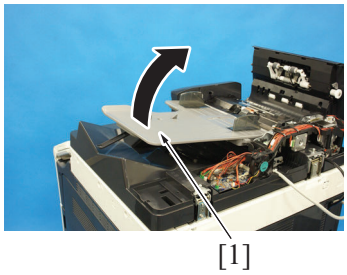

3. Remove the lever for document exit [1].
4. Remove six screws [2] and remove the cover [3].

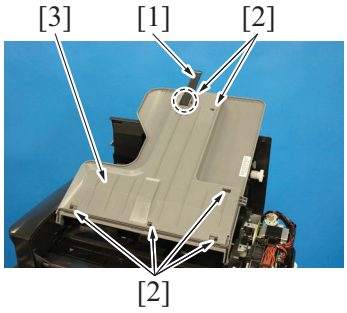

5. Remove two screws [1] and disconnect the connector [2], and remove the document width sensor [3].

NOTE

- **For mounting the document width sensor, widen the side edge stop [4] of the document feed tray fully and make sure that the round hole [5] of the gear is at the position as shown on the illustration.**

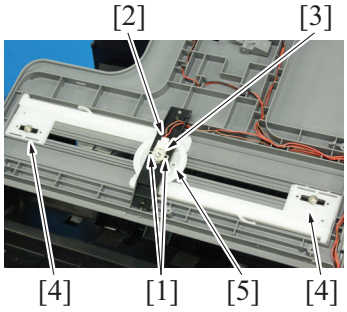

NOTE

- **For mounting the document width sensor, mount it in the direction shown on the illustration.**

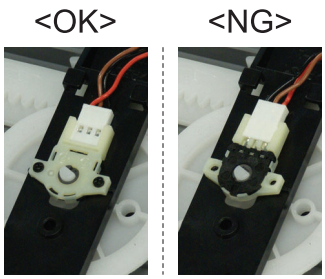

6. Reinstall the above parts following the removal steps in reverse.

NOTE

- **Be sure to perform the following operation when the document width sensor is replaced.**
- **Execute [Service Mode] -> [ADF] -> [Original Tray Width].**
  I.11.20.6 Original Tray Width
- **Turn OFF the main power switch and turn it ON again and check whether size detection operates normally.**

6.4.10 CIS power supply (CISPU) (DF-701)

1. Remove the front cover.
   G.6.4.1 Front cover (DF-701)
2. Remove the rear cover.
   G.6.4.2 Rear cover (DF-701)

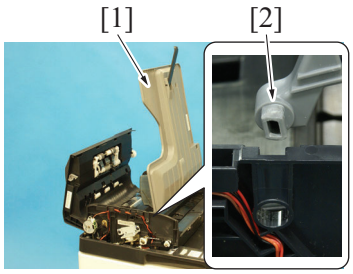

3. Lift up the document feed tray [1].
4. Remove the claw [2] at the front side, and set the document feed tray [1] off the working area.

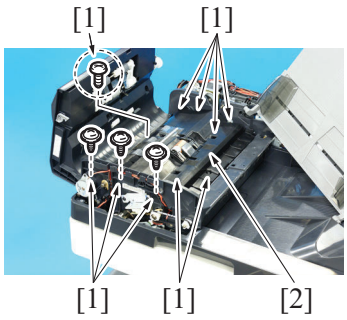

5. Remove 10 screws [1], and remove the transport guide [2].
NOTE
- **Use care when mounting the screw in the dashed circle [1] (one on the left when looking from the front) since it is different from other nine screws [1].**

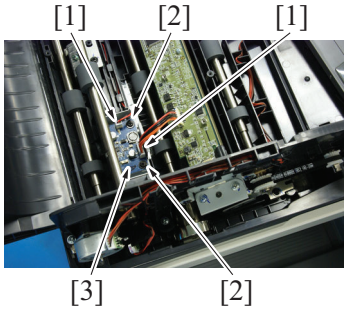

6. Disconnect two connectors [1].
7. Remove two screws [2], and remove the CIS power supply [3].

8. Reinstall the above parts following the removal steps in reverse.

6.4.11 Dual scan image processing board (DSIPB) (DF-701)

1. Remove the lower rear cover/1 of the main body.
G.5.2.20 Lower rear cover/1

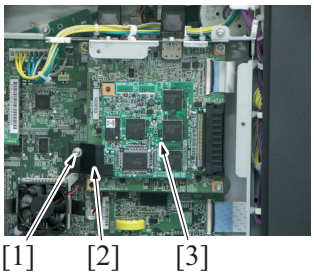

2. Remove the screw [1], and remove the PWB support [2].
NOTE
- **When the optional security kit SC-508 (for back side) is installed, remove the DSC board/2 following steps 2 and 3 described below.**

3. Remove the DSC board/2 [3].

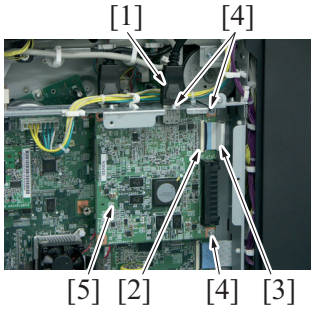

4. Disconnect the connector [1].
5. Open the connector [2] and disconnect the flat cable [3].
6. Remove three screws [4], and remove the dual scan image processing board [5].

7. Reinstall the above parts following the removal steps in reverse.

6.4.12 Document reading motor (M1) (DF-701)

(1) Remove procedure

1. Remove the rear cover.
   G.6.4.2 Rear cover (DF-701)
2. Remove the reading roller release motor.
   G.6.4.15 Reading roller release motor (M4) (DF-701)
3. Disconnect the connector [1].
4. Remove the screw [2].

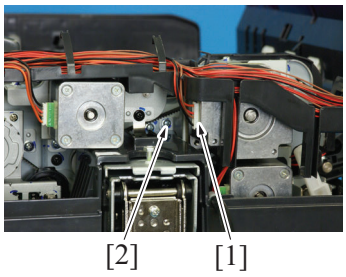

5. Remove three screws [1], and remove the document reading motor assy [2].

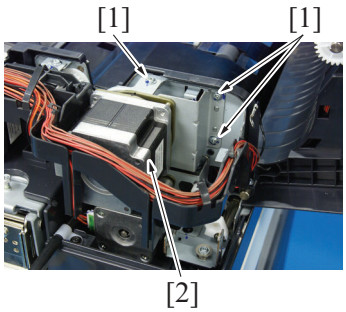

6. Remove two screws [1], and remove the document reading motor [2].

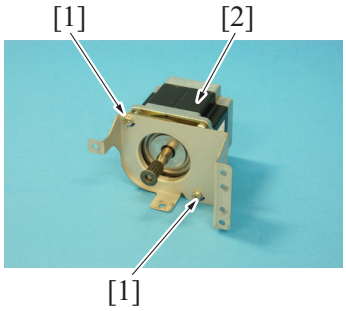

(2) Reinstallation procedure

1. Loosen the screw [1] and move the tension plate [2] in the direction of the arrow to reduce the belt tension.
2. Tighten the screw [1].

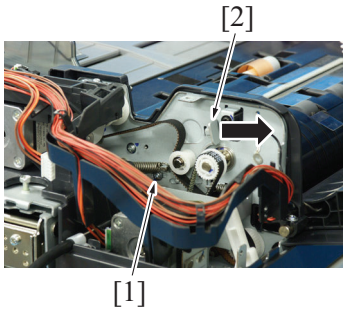

3. Install the document reading motor assy with four screws.

4. Loosen the screw [1] and apply tension to the belt.
5. Tighten the screw [1].

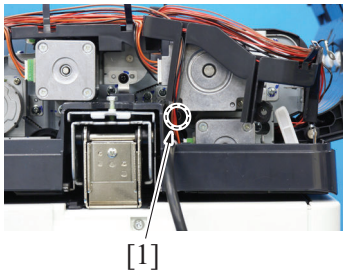

6. Reinstall the above parts following the removal steps in reverse.

6.4.13 Document feed motor (M2) (DF-701)

1. Remove the rear cover.
   G.6.4.2 Rear cover (DF-701)

2. Disconnect the connector [1].
3. Remove the screw [2], and remove the earth plate [3].
4. Remove the screw [4]

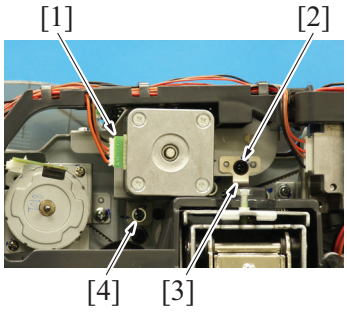

5. Remove three screws [1], and remove the document feed motor assy [2].

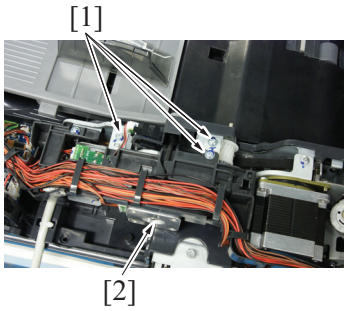

6. Remove two screws [1] and belt [2], and remove the document feed motor [2].

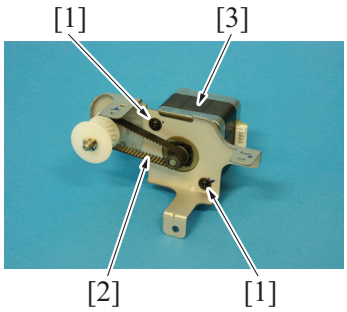

7. Reinstall the above parts following the removal steps in reverse.

6.4.14 Registration motor (M3) (DF-701)

1. Remove the rear cover.
   G.6.4.2 Rear cover (DF-701)
2. Remove the reading roller release motor.
   G.6.4.15 Reading roller release motor (M4) (DF-701)
3. Remove the document reading motor
   G.6.4.12 Document reading motor (M1) (DF-701)

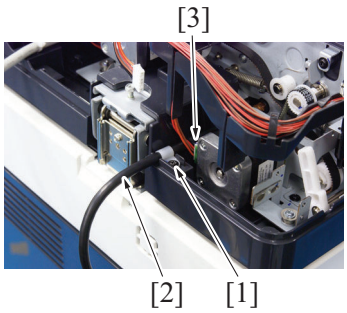

4. Remove the screw [1] and move the cable [2] off the working area.
5. Disconnect the connector [3].

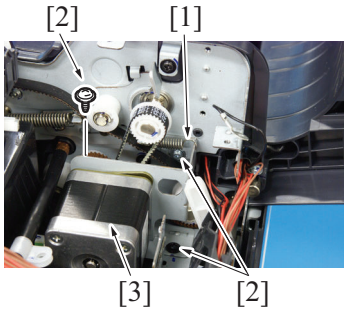

6. Remove the spring [1], and remove three screws [2].
7. Remove the registration motor assy [3].

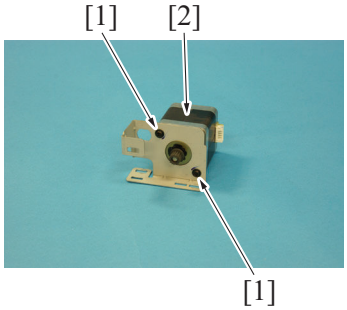

8. Remove two screws [1], and remove the registration motor [2].

9. Reinstall the above parts following the removal steps in reverse.

6.4.15 Reading roller release motor (M4) (DF-701)

1. Remove the rear cover.
G.6.4.2 Rear cover (DF-701)

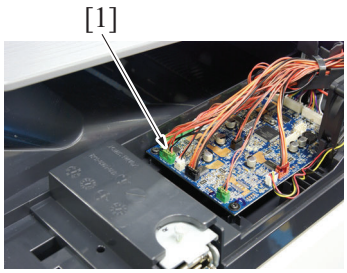

2. Disconnect the connector (J18) [1] on the DF control board.

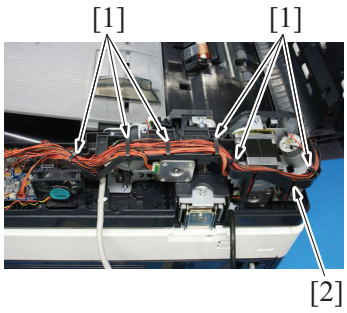

3. Remove six wire saddles [1] and remove the harness from the harness guide [2].

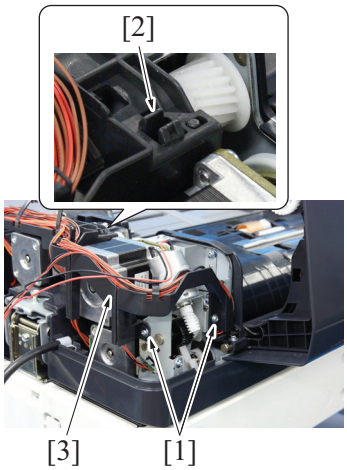

4. Remove two screws [1] and a claw [2], and move the harness guide [3] off the working area.

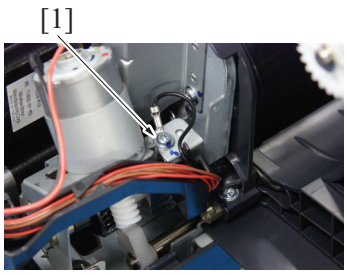

5. Remove the screw [1].

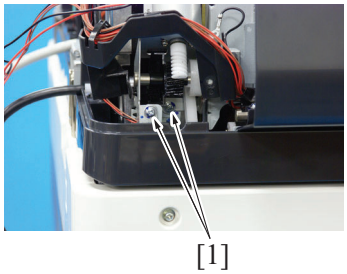

6. Remove two screws [1].

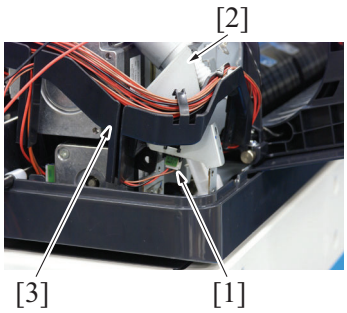

7. Disconnect the connector [1], and remove the reading roller release motor assy [2].
8. Remove the harness from the harness guide [3].

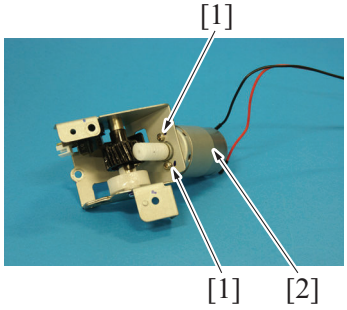

9. Remove two screws [1], and remove the reading roller release motor [2].

10. Reinstall the above parts following the removal steps in reverse.

6.4.16 CIS cleaning motor (M5) (DF-701)

1. Remove the rear cover.
   G.6.4.2 Rear cover (DF-701)

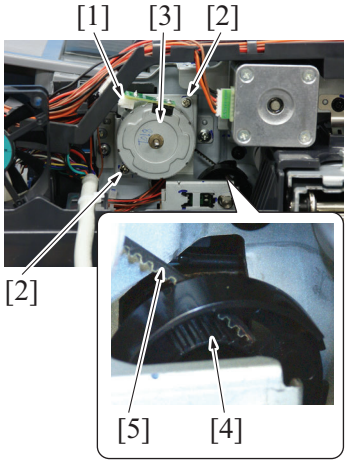

2. Disconnect the connector [1]
3. Remove two screws [2], and remove the CIS cleaning motor [3].
   NOTE
   - **When mounting it, make sure to set the belt [5] to the gear [4] on the pulley firmly.**
4. Reinstall the above parts following the removal steps in reverse.

6.4.17 Document reading glass cleaning motor (M6) (DF-701)

1. Remove the front cover.
   G.6.4.1 Front cover (DF-701)

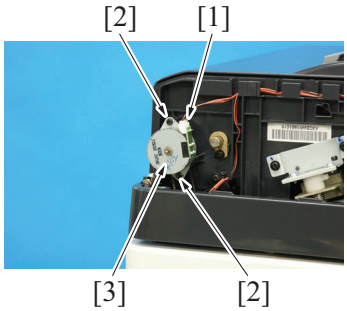

2. Disconnect the connector [1].
3. Remove two screws [2], and remove the document reading glass cleaning motor [3].
4. Reinstall the above parts following the removal steps in reverse.

6.4.18 DF cooling fan motor (FM1) (DF-701)

1. Remove the rear cover.
   G.6.4.2 Rear cover (DF-701)

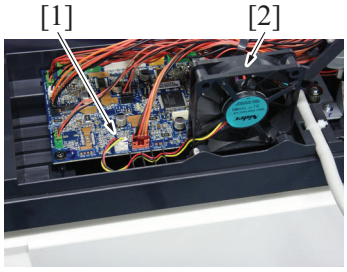

2. Disconnect the connector [1].
3. Remove the DF cooling fan motor [2].
4. Reinstall the above parts following the removal steps in reverse.

6.4.19 Stamp unit (SP-501)

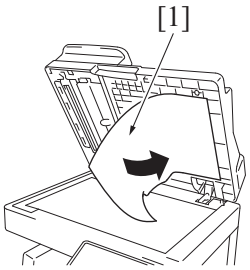

1. Peel off the mat (at two places on the left) [1].

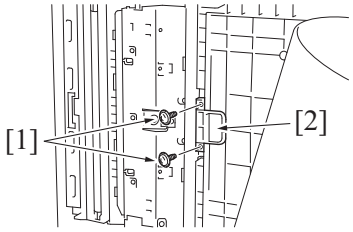

2. Remove two screws [1] and remove the cover [2].

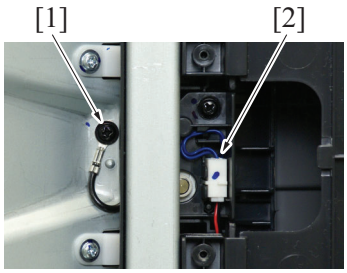

3. Remove the screw [1].
4. Remove the harness and disconnect the connector [2].

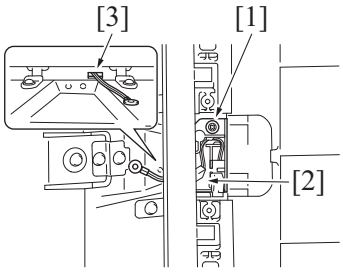

5. Remove the screw [1], and remove the guide plate [2].
   NOTE
   - **When mounting it, set the ground terminal through the hole [3] shown on the illustration.**

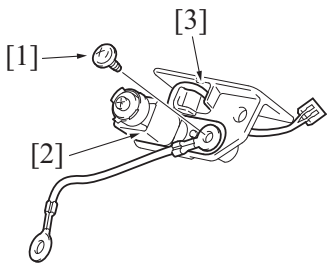

6. Remove the screw [1] and remove the stamp unit [2].
   NOTE
   - **When mounting it, set the harness through the hole [3] shown on the illustration.**
   - **Ensure that the ground terminal is on the upper side of the mounting bracket of stamp unit.**

7. Reinstall the above parts following the removal steps in reverse.

6.4.20 Stamp (SP-501)

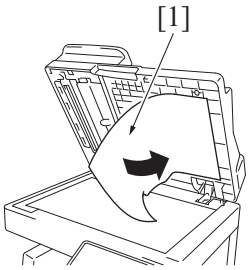

1. Peel off the mat (at two places on the left) [1].

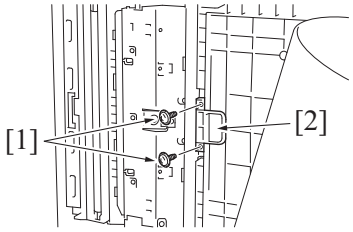

2. Remove two screws [1] and remove the cover [2].

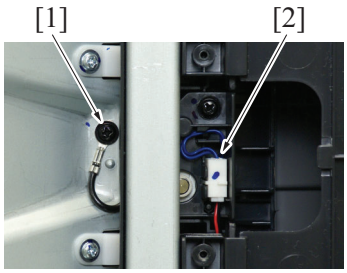

3. Remove the screw [1].
4. Remove the harness and disconnect the connector [2].

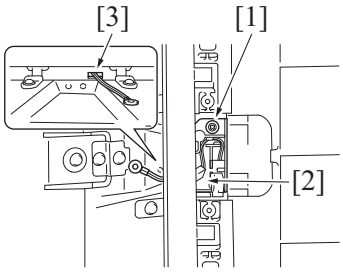

5. Remove the screw [1], and remove the guide plate [2].
   NOTE
   - **When mounting it, set the ground terminal through the hole [3] shown on the illustration.**

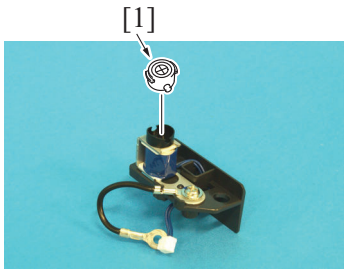

6. Remove the used stamp, and install the new stamp of replacement [1].
   NOTE
   - **Align the round pin of the stamp with the slit in the stamp unit side.**

7. Reinstall the above parts following the removal steps in reverse.

6.5 Disassembly/reassembly procedure (DF-624/SP-501)

6.5.1 Front cover (DF-624)

1. Open the reverse automatic document feeder.

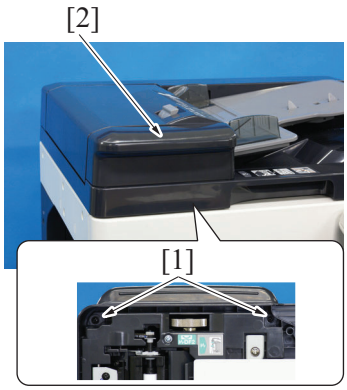

2. Remove two screws [1] and remove the front cover [2].

3. Reinstall the above parts following the removal steps in reverse.

6.5.2 Rear cover (DF-624)

1. Open the reverse automatic document feeder.

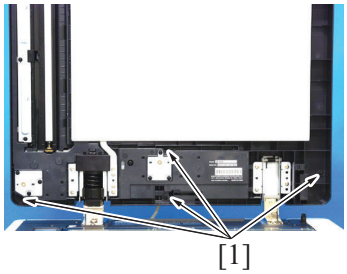

2. Remove four screws [1].
NOTE
- **If the reverse automatic document feeder is set to be lifted up at angles up to 60 degrees due to the set position of the stopper for the hinge, change the set position to the lower side so that the reverse automatic document feeder can be opened completely.**

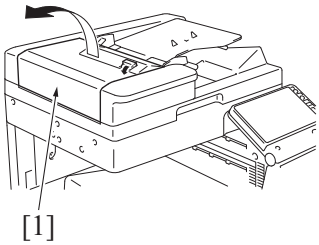

3. Open the left cover [1].

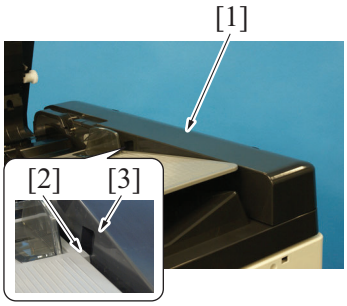

4. Remove the rear cover [1].
NOTE
- **For mounting the rear cover, mount it so that the protrusion [2] of the document feed tray will fit to the groove [3] on the rear cover.**

5. Reinstall the above parts following the removal steps in reverse.

6.5.3 Left cover unit (DF-624)

1. Remove the rear cover.
G.6.5.2 Rear cover (DF-624)

2. Remove the screw [1], and remove the ground earth [2] from the harness guide.

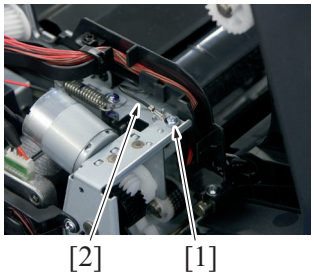

3. Disconnect the connector [1], and remove the harness from the harness guide [2].

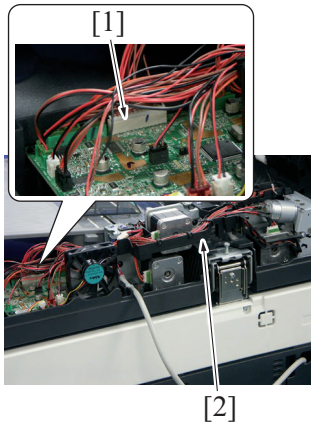

4. Remove the screw [1], and remove the shaft [2].

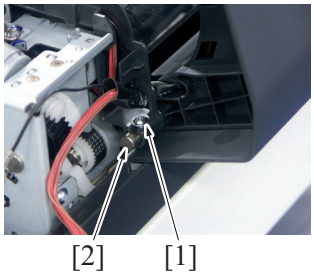

5. Remove the left cover unit [2] as shown in the illustration while pressing the harness into the hole [1] shown in the illustration.

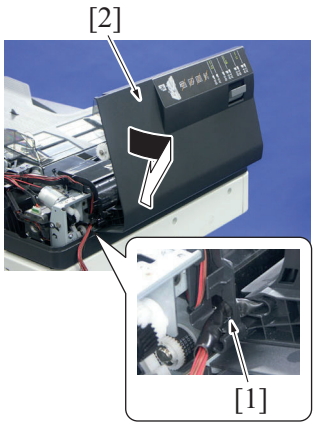

6. To reinstall, reverse the order of removal.

6.5.4 Reverse automatic document feeder (DF-624)

1. Remove two hinge covers [1].

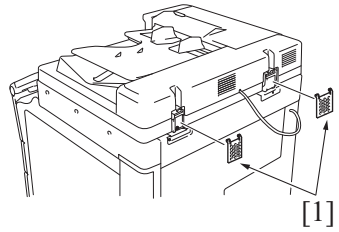

2. Remove the screws [1], and remove the DF cable cover [2] from the back of the main body.

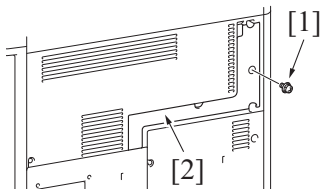

3. Remove the cable tie [1], and disconnect two connectors [2].

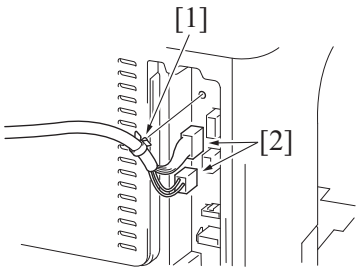

4. Open the reverse automatic document feeder.
NOTE
- **If the reverse automatic document feeder is set to be lifted up at angles up to 60 degrees due to the set position of the stopper for the hinge, change the set position to the lower side so that the reverse automatic document feeder can be opened completely.**

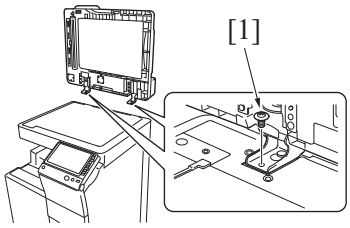

5. Remove two screws [1].

6. Remove the reverse automatic document feeder [1].

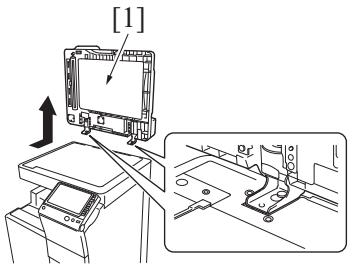

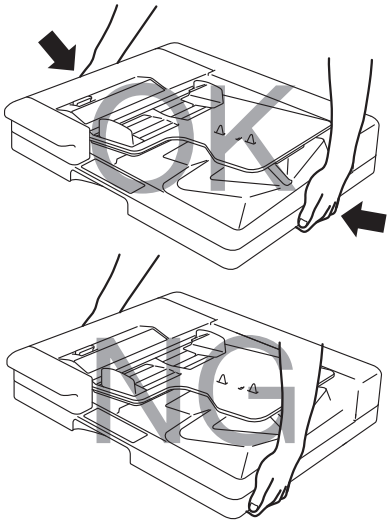

NOTE
- **When carrying the reverse automatic document feeder, be sure to hold onto the specified positions. The feeder main body can be distorted if held at inappropriate positions.**
- **After removing the reverse automatic document feeder from the machine, place it on the floor or the like as shown in the illustration.**

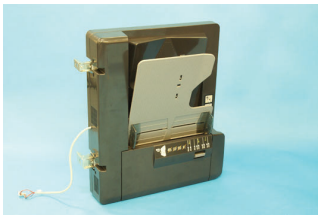

7. Reinstall the above parts following the removal steps in reverse.

6.5.5 Glass cleaning roller unit (DF-624)

1. Remove the front cover.
   G.6.5.1 Front cover (DF-624)
2. Remove the reverse automatic document feeder.
   G.6.5.4 Reverse automatic document feeder (DF-624)

3. Place the reverse automatic document feeder vertically as shown in the illustration.



4. Remove the C-clip [1] and the bearing [2].

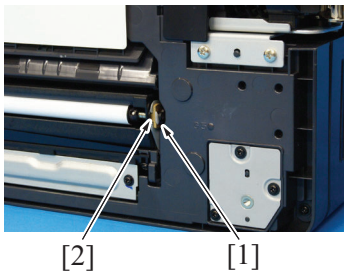

5. Remove the C-clip [1], and shift the bearing [2], and remove the belt [3].
6. Remove the glass cleaning roller unit [4].

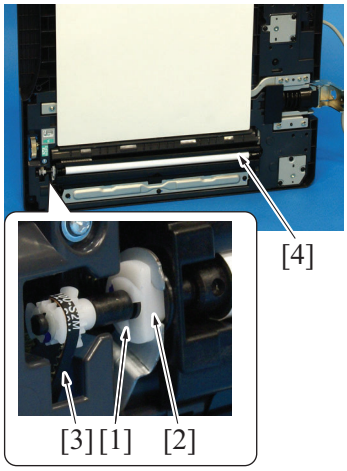

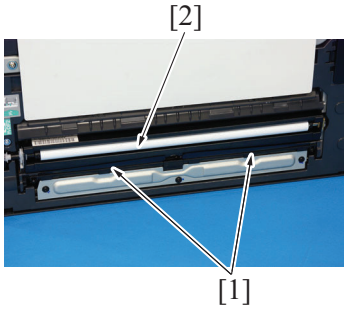

NOTE
- **When installing the glass cleaning roller unit [2], make sure that the transparent sheets [1] are outside of the glass cleaning roller unit [2].**

7. Reinstall the above parts following the removal steps in reverse.

NOTE
- **When installing the glass cleaning roller unit, the following adjustment is necessary.**
  - **Adjust the actuator [1] so that it is positioned where it blocks the light of the document reading glass cleaning sensor [2], and install the belt.**

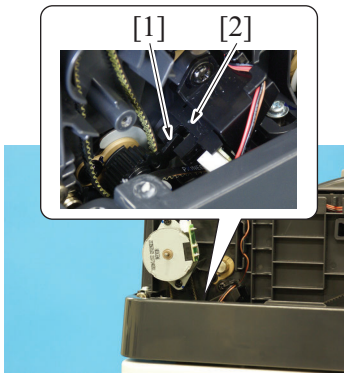

- **After completing the above adjustment, when you turn ON the main power switch, make sure that the shaft [1] is at the correct position (home position).**

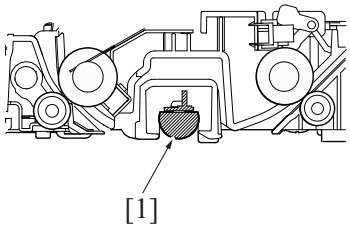

6.5.6 DF control board (DFCB) (DF-624)

1. Remove the rear cover.
   G.6.5.2 Rear cover (DF-624)

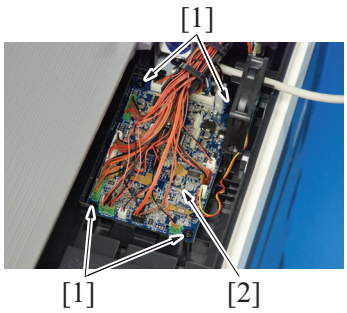

2. Disconnect all the fifteen connectors from the DF control board.
3. Remove four screws [1], and remove the DF control board [2].

4. Reinstall the above parts following the removal steps in reverse.

NOTE

- **Be sure to perform the following steps after the DF control board has been replaced with a new one.**
- **Install the firmware.**
- **Execute [Service Mode] -> [ADF] -> [Original Tray Width].**
  I.11.20.6 Original Tray Width
- **Execute [Service Mode] -> [ADF] -> [Mixed original Size adjustment].**
  I.11.20.10 Mixed original size adjustment

6.5.7 Document width size sensor (VR1) (DF-624)

1. Remove the rear cover.
   G.6.5.2 Rear cover (DF-624)

2. Lift up the document feed tray [1].

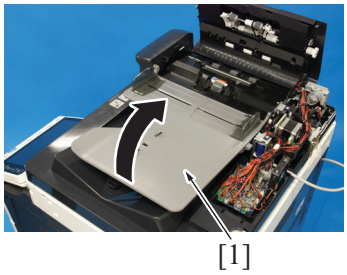

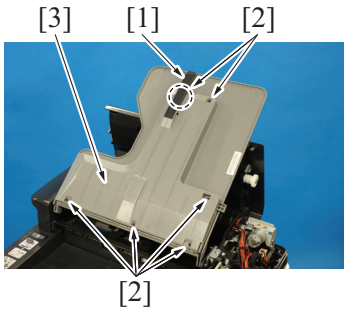

3. Remove the lever for document exit [1].
4. Remove six screws [2] and remove the cover [3].

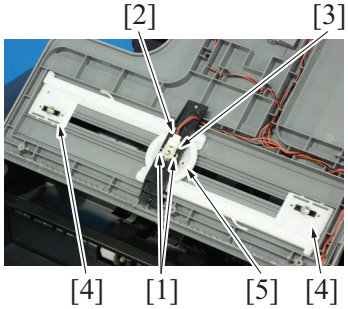

5. Remove two screws [1] and disconnect the connector [2], and remove the document width size sensor [3].
   NOTE
   - **For mounting the document width size sensor, widen the side edge stop [4] of the document feed tray fully and make sure that the round hole [5] of the gear is at the position as shown on the illustration.**

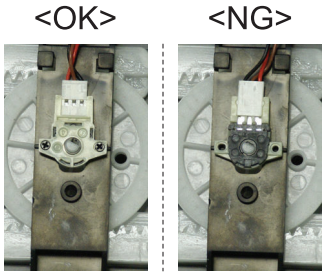

NOTE
- **For mounting the document width size sensor, mount it in the direction shown on the illustration.**

6. Reinstall the above parts following the removal steps in reverse.

NOTE
- **Be sure to perform the following operation when the document width size sensor is replaced.**
- **Execute [Service Mode] -> [ADF] -> [Original Tray Width].**
  I.11.20.6 Original Tray Width
- **Turn OFF the main power switch and turn it ON again and check whether size detection operates normally.**

6.5.8 Document reading motor (M1) (DF-624)

1. Remove the rear cover.
   G.6.5.2 Rear cover (DF-624)
2. Remove the reading roll release motor.
   G.6.5.12 Reading roll release motor (M5) (DF-624)

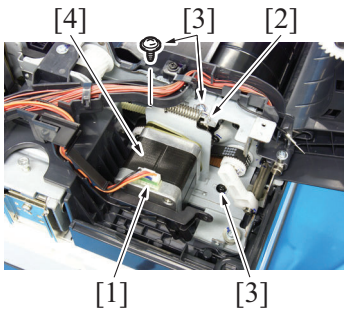

3. Disconnect the connector [1].
4. Remove the spring [2], and remove three screws [3].
5. Remove the document reading motor assy [4].

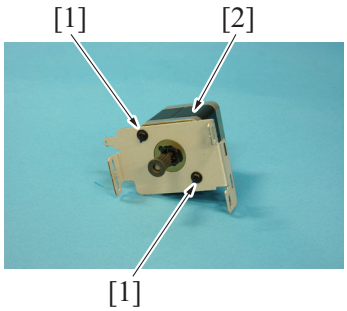

6. Remove two screws [1], and remove the document reading motor [2].

NOTE
- **For mounting it, set the document reading motor to the belt position [1] shown on the illustration.**

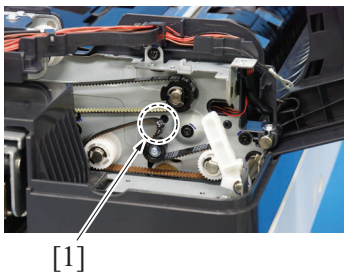

7. Reinstall the above parts following the removal steps in reverse.

6.5.9 Document feed motor (M2) (DF-624)

1. Remove the rear cover.
   G.6.5.2 Rear cover (DF-624)

2. Lift up the document feed tray [1].

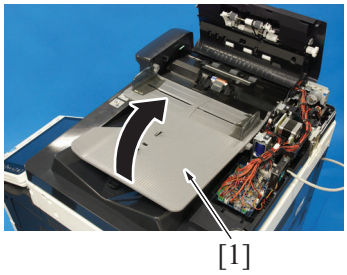

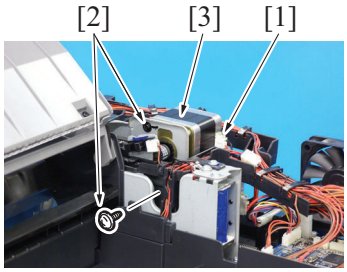

3. Disconnect the connector [1].
4. Remove two screws [2], and remove the document feed motor [3].

5. Reinstall the above parts following the removal steps in reverse.

6.5.10 Registration motor (M3) (DF-624)

1. Remove the rear cover.
   G.6.5.2 Rear cover (DF-624)
2. Remove the document feed motor.
   G.6.5.9 Document feed motor (M2) (DF-624)

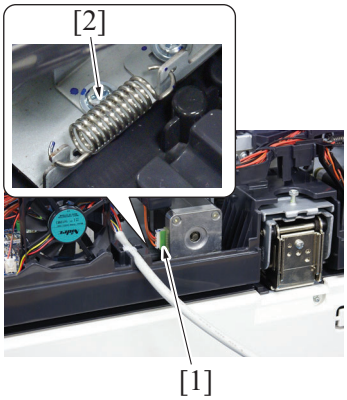

3. Disconnect the connector [1].
4. Remove the spring [2].

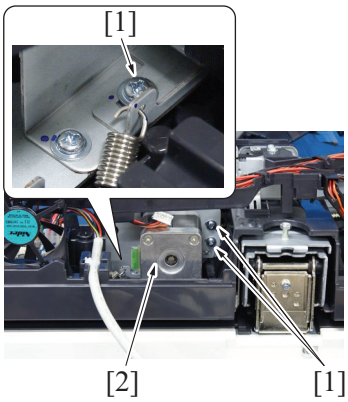

5. Remove three screws [1], and remove the registration motor assy [2].

6. Remove two screws [1], and remove the registration motor [2].

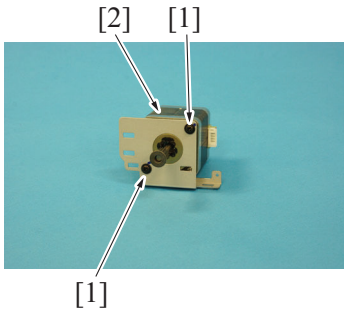

7. Reinstall the above parts following the removal steps in reverse.

6.5.11 Glass cleaning motor (M4) (DF-624)

1. Remove the front cover.
G.6.5.1 Front cover (DF-624)

2. Disconnect the connector [1].
3. Remove two screws [2], and remove the glass cleaning motor [3].

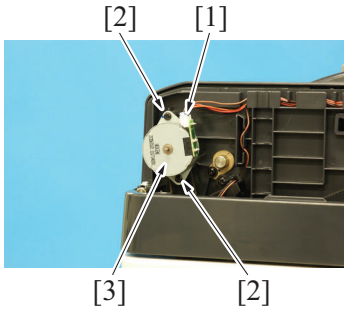

4. Reinstall the above parts following the removal steps in reverse.

6.5.12 Reading roll release motor (M5) (DF-624)

1. Remove the rear cover.
G.6.5.2 Rear cover (DF-624)

2. Disconnect the connector (J18) [1] on the DF control board.

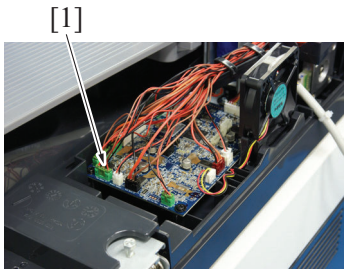

3. Remove five wire saddles [1] and remove the harness from the harness guide [2].

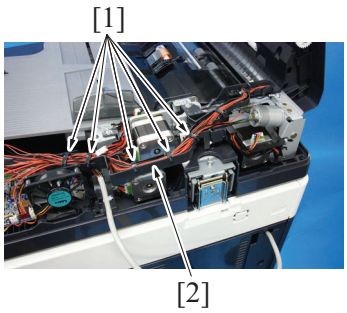

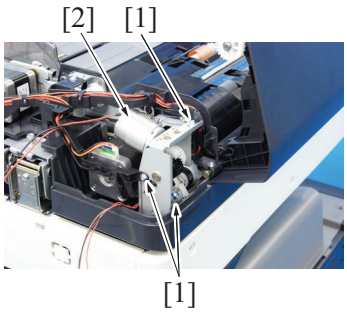

4. Remove three screws [1], and remove the drive assy [2].

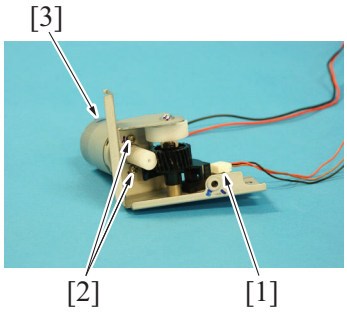

5. Disconnect the connector [1].
6. Remove two screws [2], and remove the reading roll release motor [3].

7. Reinstall the above parts following the removal steps in reverse.

6.5.13 DF cooling fan motor (FM1) (DF-624)

1. Remove the rear cover.
   G.6.5.2 Rear cover (DF-624)

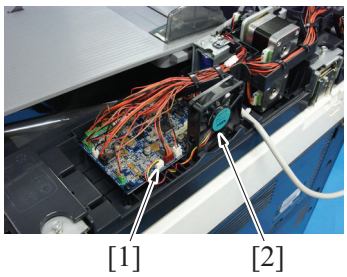

2. Disconnect the connector [1].
3. Remove the DF cooling fan motor [2].

4. Reinstall the above parts following the removal steps in reverse.

6.5.14 Document exit roller release solenoid (SD1) (DF-624)

1. Remove the rear cover.
   G.6.5.2 Rear cover (DF-624)

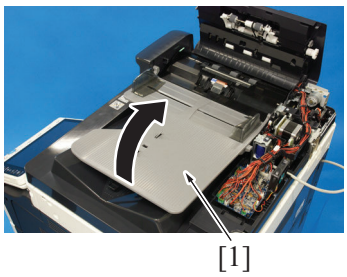

2. Lift up the document feed tray [1].

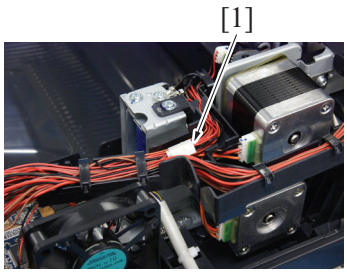

3. Disconnect the hookup connector [1].

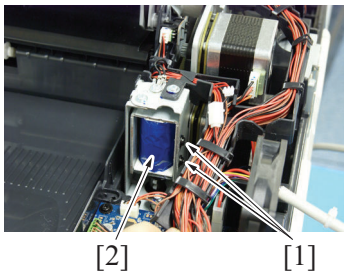

4. Remove two screws [1], and remove the document exit roller release solenoid [2].

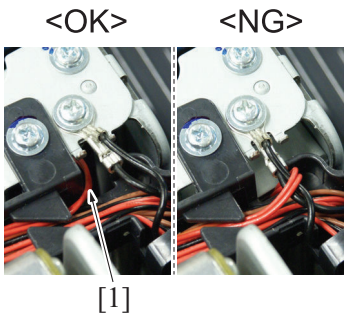

NOTE

- **When mounting it, set the harness through the hole [1] shown on the illustration.**

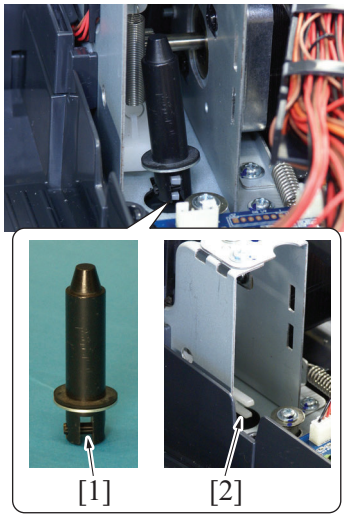

NOTE

- **Insert the core at the bottom [1] so that the parts shown as [2] on the illustration will be properly set before mounting the document exit roller release solenoid.**

5. Reinstall the above parts following the removal steps in reverse.

6.5.15 Stamp unit (SP-501)

1. Open the left cover [1].

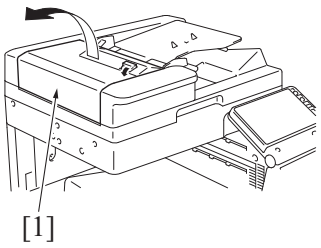

2. Lift up the guide plate DF1 [1].
3. Remove the screw [2], and remove the cover [3].

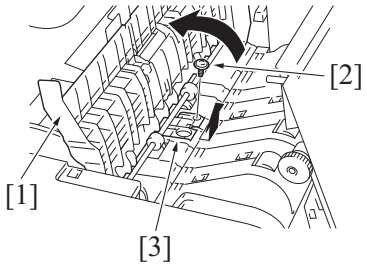

4. Remove the screw [1], and remove the ground terminal [2].
5. Disconnect the connector [3].
6. Remove the stamp unit [4].

NOTE

- **Ensure that the ground terminal is on the upper side of the mounting bracket of stamp unit.**
- **Route the harness as shown in the illustration to place its connector under the guide plate.**

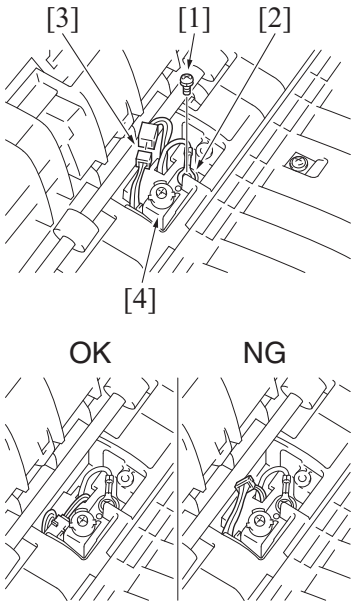

7. Reinstall the above parts following the removal steps in reverse.

6.5.16 Stamp (SP-501)

1. Open the left cover [1].

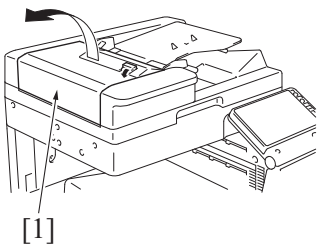

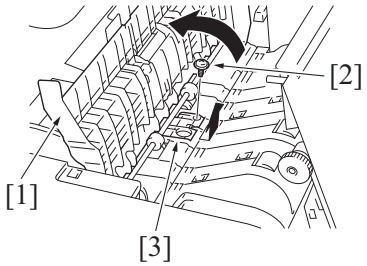

2. Lift up the guide plate DF1 [1].
3. Remove the screw [2], and remove the cover [3].

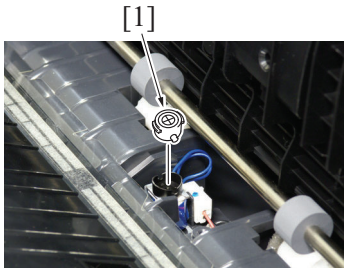

4. Remove the used stamp, and install the new stamp of replacement [1].
NOTE
- **Align the round pin of the stamp with the slit in the stamp unit side.**

5. Reinstall the above parts following the removal steps in reverse.

6.6 Disassembly/reassembly procedure (PC-110/PC-210)

6.6.1 Right door (PC-110/PC-210)

1. Open the right door.

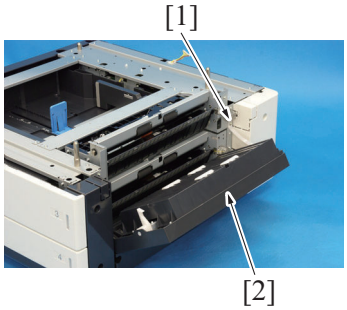

2. Remove the screw [1], and remove the right door [2].
3. To reinstall, reverse the order of removal.

6.6.2 Rear right cover (PC-110/PC-210)

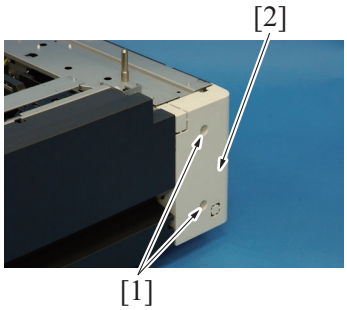

1. Remove two screws [1], and remove the rear right cover [2].
2. To reinstall, reverse the order of removal.

6.6.3 Rear cover (PC-110/PC-210)

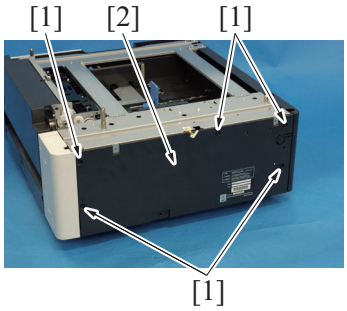

1. Remove five screws [1], and remove the rear cover [2].
2. To reinstall, reverse the order of removal.

6.6.4 Tray 3, tray 4, storage box (PC-110/PC-210)

NOTE

- **The tray 3, the tray 4 and the storage box are of the same form and mechanism. This procedure shows the steps taken for the tray 3.**

1. Slide out the tray 3.

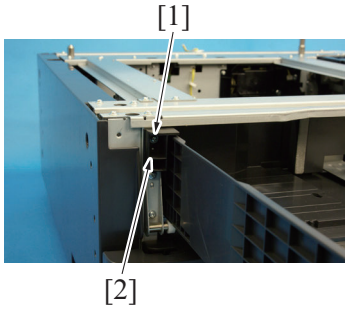

2. Remove the screw [1], and remove the stopper [2].
3. Hold up the tray 3 to remove it.

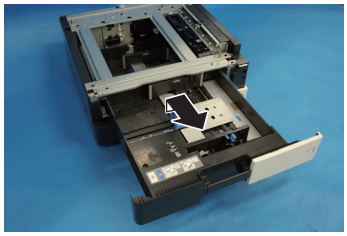

4. To reinstall, reverse the order of removal.

6.6.5 Paper feed cabinet (PC-110/PC-210)

⚠ CAUTION

- When holding the transportation handles, be careful not to catch your fingers in the main body.

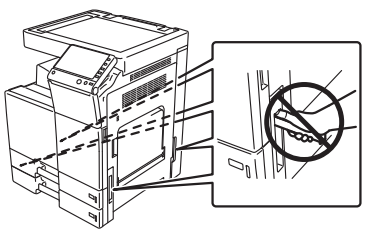

1. Slide out the tray 2 and tray 3.

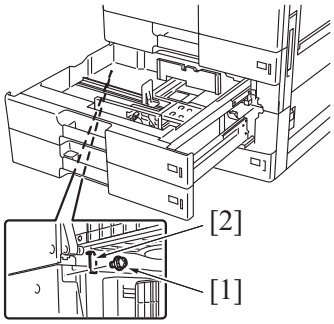

2. Remove the screw [1], and remove the fixing bracket [2].

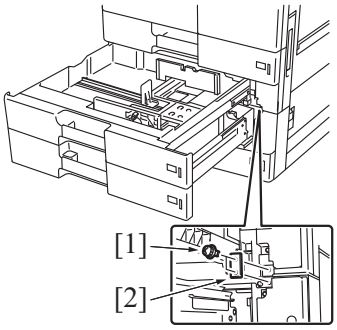

3. Remove two screws [1], and remove the fixing bracket [2].

4. Slide the tray 2 and tray 3 back in.

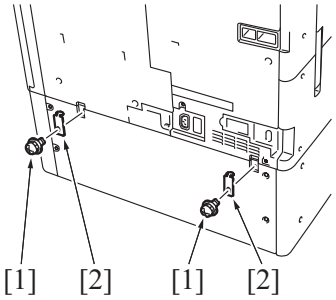

5. Remove two screws [1], and remove two fixing brackets [2].

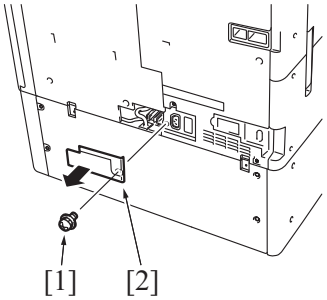

6. Remove the screw [1], and remove the rear under cover [2].

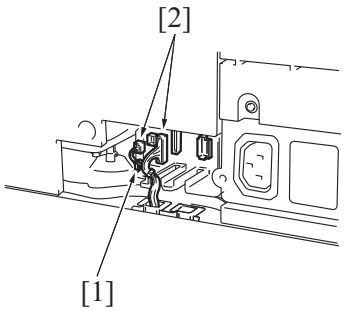

7. Remove the harness from the wire saddle [1].
8. Disconnect two connectors [2].

9. Pull out the transportation handles.

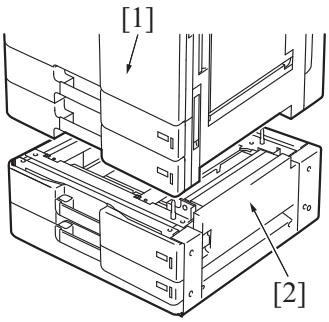

10. Hold the transportation handles at the right and left of the main body, and lift the main body [1] and then remove the paper feed cabinet [2].
NOTE
- **When transporting or moving the main body, assign adequate number of persons.**

6.6.6 Tray 3 paper feed unit (PC-110/PC-210)

1. Remove the right door.
G.6.6.1 Right door (PC-110/PC-210)
2. Remove the rear right cover.
G.6.6.2 Rear right cover (PC-110/PC-210)
3. Slide out the tray 3.

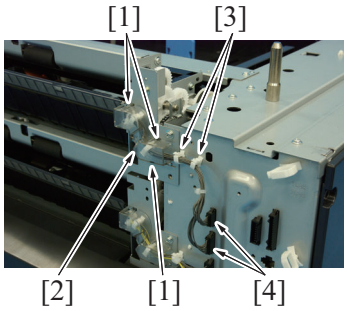

4. Remove three tabs [1], and remove the harness cover [2].
5. Remove the harness from two wire saddles [3].
6. Disconnect two connectors [4].

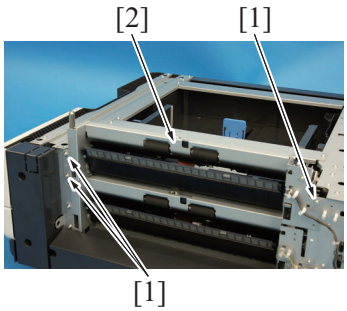

7. Remove three screws [1], and remove the tray 3 paper feed unit [2].

8. To reinstall, reverse the order of removal.

6.6.7 Tray 4 paper feed unit (PC-210)

1. Remove the right door.
G.6.6.1 Right door (PC-110/PC-210)
2. Remove the rear right cover.
G.6.6.2 Rear right cover (PC-110/PC-210)
3. Slide out the tray 4.

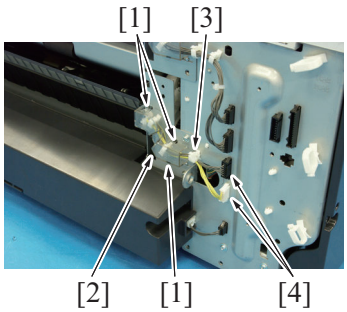

4. Remove three tabs [1], and remove the harness cover [2].
5. Remove the harness from the wire saddle [3].
6. Disconnect two connectors [4].

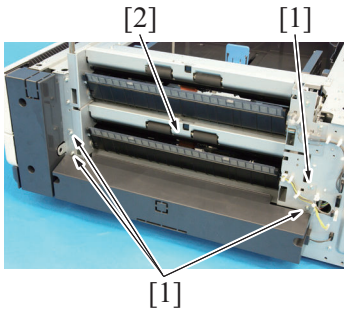

7. Remove four screws [1], and remove the tray 4 paper feed unit [2].
8. To reinstall, reverse the order of removal.

6.6.8 PC control board (PCCB) (PC-110/PC-210)

1. Remove the rear cover.
   G.6.6.3 Rear cover (PC-110/PC-210)

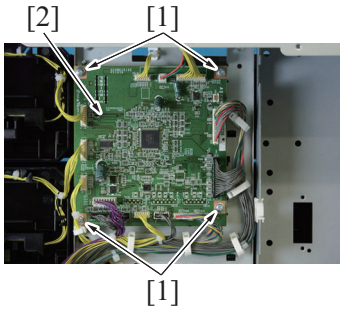

2. Disconnect all connectors on the PC control board.
3. Remove four screws [1], and remove the PC control board [2].
4. To reinstall, reverse the order of removal.

6.6.9 Tray 3 paper empty indicator board (PEIB/3), tray 4 paper empty indicator board (PEIB/4) (PC-110/PC-210)

NOTE

- **The tray 3 paper empty indicator board and the tray 4 paper empty indicator board are of the same form and mechanism. This procedure shows the steps taken for the tray 3 paper empty indicator board.**

1. Slide out the tray 3.
2. Slide out the tray 4 or storage box.

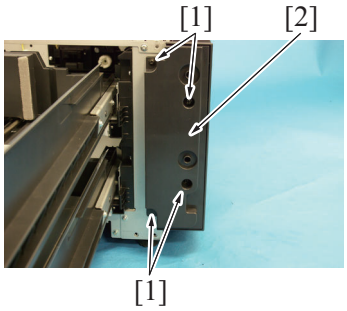

3. Remove four screws [1], and remove the right front cover [2].

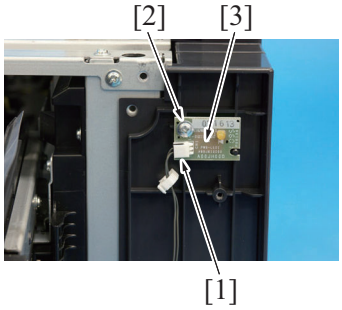

4. Disconnect the connector [1].
5. Remove the screw [2], and remove the tray 3 paper empty indicator board [3].
6. To reinstall, reverse the order of removal.

6.6.10 Tray 3 FD paper size board (FDPSB/3), tray 4 FD paper size board (FDPSB/4) (PC-110/PC-210)

NOTE

- **The tray 3 FD paper size board and the tray 4 FD paper size board are of the same form and mechanism. This procedure shows the steps taken for the tray 3 FD paper size board.**

1. Remove the tray 3.
   G.6.6.4 Tray 3, tray 4, storage box (PC-110/PC-210)

2. Remove the tray 4 or storage box.
G.6.6.4 Tray 3, tray 4, storage box (PC-110/PC-210)

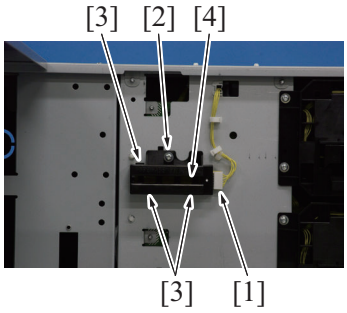

3. Disconnect the connector [1].
4. Remove the screw [2] and three tabs [3], and remove the tray 3 FD paper size board assy [4].

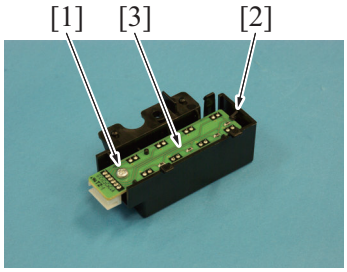

5. Remove the screw [1] and the tab [2], and remove the tray 3 FD paper size board [3].

6. To reinstall, reverse the order of removal.

6.6.11 Tray 3 CD paper size board (CDPSB/3) (PC-110/PC-210)

1. Remove the rear cover.
G.6.6.3 Rear cover (PC-110/PC-210)

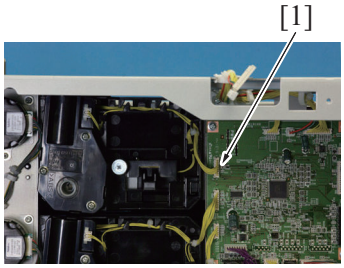

2. Disconnect the connector [1] on the PC control board.

3. Remove the tray 3.
G.6.6.4 Tray 3, tray 4, storage box (PC-110/PC-210)
4. Remove the tray 4 or storage box.
G.6.6.4 Tray 3, tray 4, storage box (PC-110/PC-210)

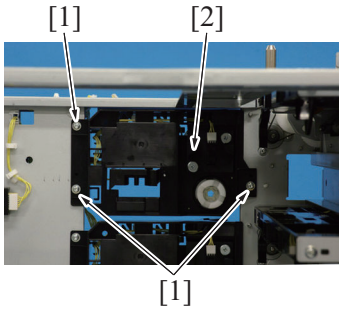

5. Remove three screws [1], and remove the tray 3 lift-up motor assy [2].

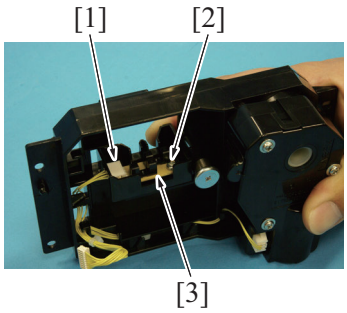

6. Disconnect the connector [1].
7. Remove the screw [2], and remove the tray 3 CD paper size board [3].

8. To reinstall, reverse the order of removal.

6.6.12 Tray 4 CD paper size board (CDPSB/4) (PC-210)

1. Remove the rear cover.
G.6.6.3 Rear cover (PC-110/PC-210)

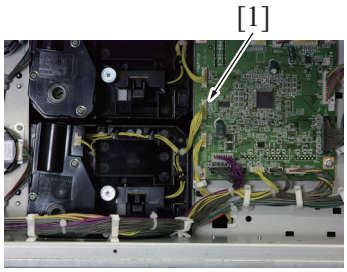

2. Disconnect the connector [1] on the PC control board.

3. Remove the tray 3 and tray 4.
G.6.6.4 Tray 3, tray 4, storage box (PC-110/PC-210)

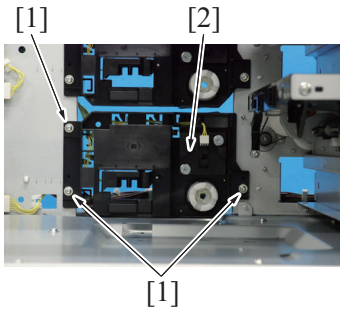

4. Remove three screws [1], and remove the tray 4 lift-up motor assy [2].

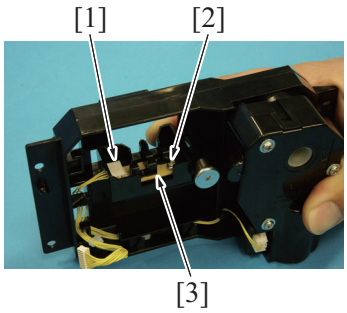

5. Disconnect the connector [1].
6. Remove the screw [2], and remove the tray 4 CD paper size board [3].

7. To reinstall, reverse the order of removal.

6.6.13 Tray 3 paper feed motor (M111), tray 4 paper feed motor (M121) (PC-110/PC-210)

NOTE

- **The tray 3 paper feed motor and the tray 4 paper feed motor are of the same form and mechanism. This procedure shows the steps taken for the tray 3 paper feed motor.**

1. Remove the rear cover.
G.6.6.3 Rear cover (PC-110/PC-210)

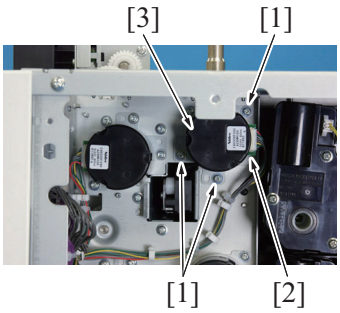

2. Remove three screws [1].
3. Disconnect the connector [2], and remove the tray 3 paper feed motor assy [3].
   NOTE
   - **When mounting the tray 3 paper feed motor assy, use care not to forget to set the belt to the gear.**

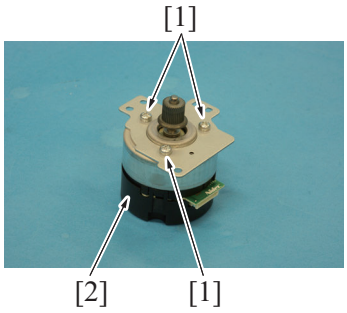

4. Remove three screws [1], and remove the tray 3 paper feed motor [2].

5. To reinstall, reverse the order of removal.

6.6.14 Tray 3 vertical transport motor (M112), tray 4 vertical transport motor (M122) (PC-110/PC-210)

NOTE
- **The tray 3 vertical transport motor and the tray 4 vertical transport motor are of the same form and mechanism. This procedure shows the steps taken for the tray 3 vertical transport motor.**

1. Remove the rear cover.
   G.6.6.3 Rear cover (PC-110/PC-210)

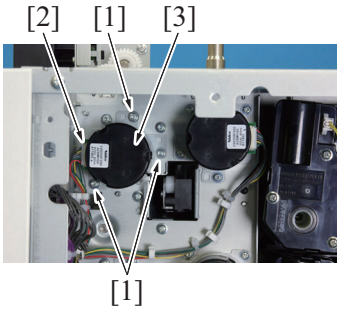

2. Remove three screws [1].
3. Disconnect the connector [2], and remove the tray 3 vertical transport motor assy [3].
   NOTE
   - **When mounting the tray 3 vertical transport motor assy, use care not to forget to set the belt to the gear.**

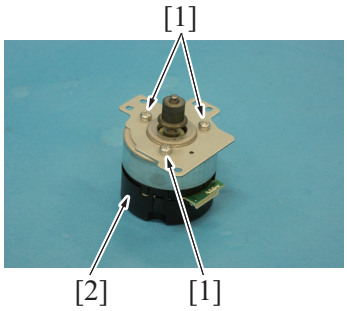

4. Remove three screws [1], and remove the tray 3 vertical transport motor [2].

5. To reinstall, reverse the order of removal.

6.6.15 Tray 3 lift-up motor (M113), tray 4 lift-up motor (M123) (PC-110/PC-210)

NOTE
- **The tray 3 lift-up motor and the tray 4 lift-up motor are of the same form and mechanism. This procedure shows the steps taken for the tray 3 lift-up motor.**

1. Remove the rear cover.
   G.6.6.3 Rear cover (PC-110/PC-210)

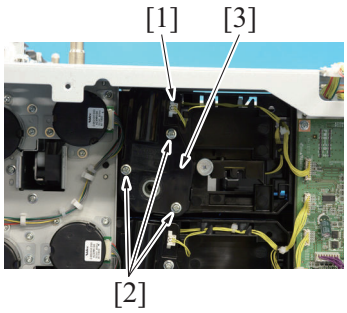

2. Disconnect the connector [1].
3. Remove three screws [2], and remove the tray 3 lift-up motor [3].
4. To reinstall, reverse the order of removal.

6.7 Disassembly/reassembly procedure (PC-410)

6.7.1 Right door (PC-410)

1. Open the right door.

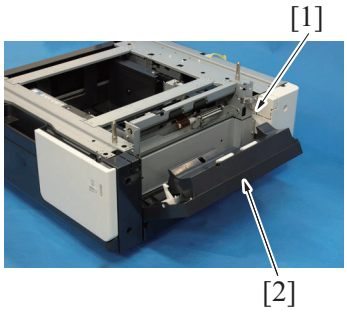

2. Remove the screw [1], and remove the right door [2].
3. To reinstall, reverse the order of removal.

6.7.2 Rear right cover (PC-410)

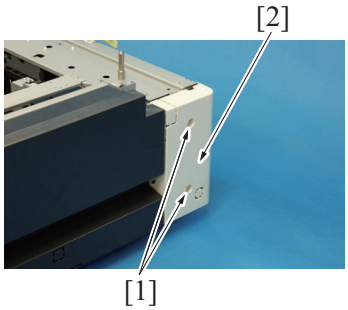

1. Remove two screws [1], and remove the rear right cover [2].
2. To reinstall, reverse the order of removal.

6.7.3 Rear cover (PC-410)

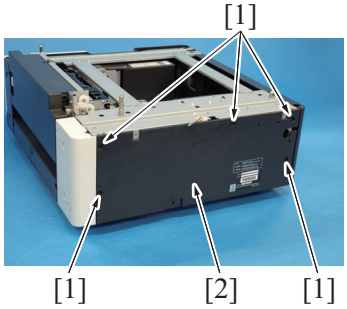

1. Remove five screws [1], and remove the rear cover [2].
2. To reinstall, reverse the order of removal.

6.7.4 Paper feed tray (PC-410)

1. Slide out the paper feed tray.

2. Hold up the paper feed tray to remove it.

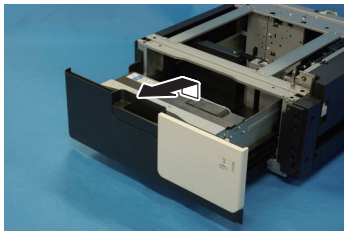

3. To reinstall, reverse the order of removal.

6.7.5 Paper feed cabinet (PC-410)

⚠ CAUTION

- When holding the transportation handles, be careful not to catch your fingers in the main body.

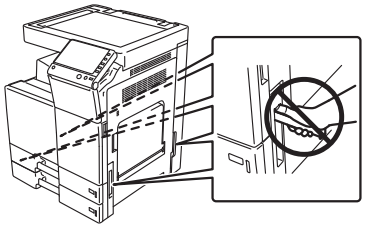

1. Slide out the tray 2 and tray 3.

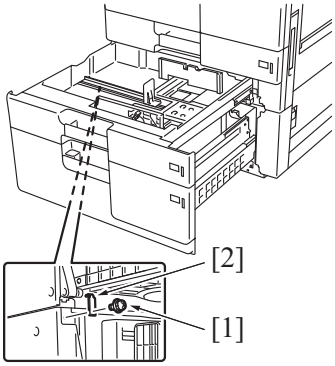

2. Remove the screw [1], and remove the fixing bracket [2].

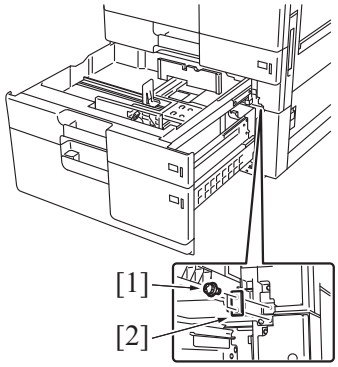

3. Remove two screws [1], and remove the fixing bracket [2].

4. Slide the tray 2 and tray 3 back in.

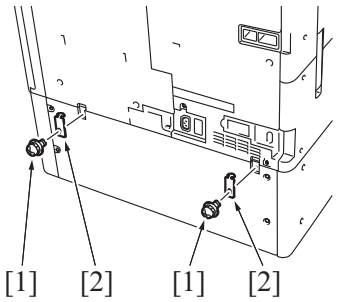

5. Remove two screws [1], and remove two fixing brackets [2].

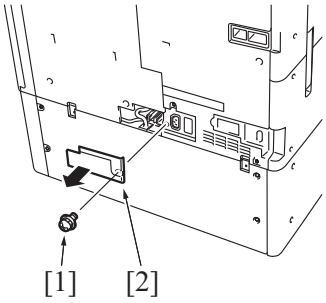

6. Remove the screw [1], and remove the rear under cover [2].

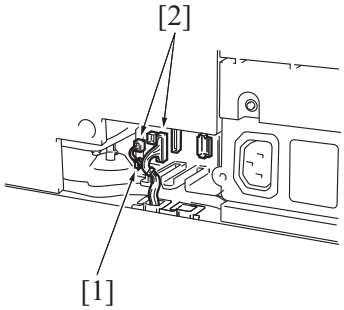

7. Remove the harness from the wire saddle [1].
8. Disconnect two connectors [2].

9. Pull out the transportation handles.

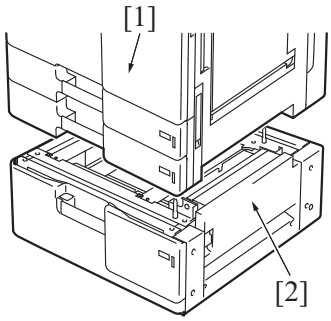

10. Hold the transportation handles at the right and left of the main body, and lift the main body [1] and then remove the paper feed cabinet [2].
NOTE
- **When transporting or moving the main body, assign adequate number of persons.**

6.7.6 Paper feed unit (PC-410)

1. Remove the right door.
G.6.7.1 Right door (PC-410)
2. Remove the rear right cover.
G.6.7.2 Rear right cover (PC-410)
3. Slide out the paper feed tray.

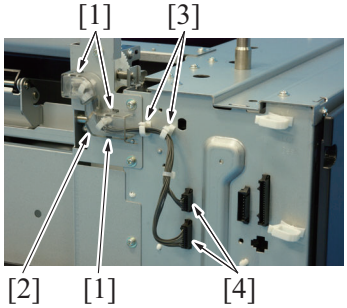

4. Remove three tabs [1], and remove the harness cover [2].
5. Remove the harness from two wire saddles [3].
6. Disconnect two connectors [4].

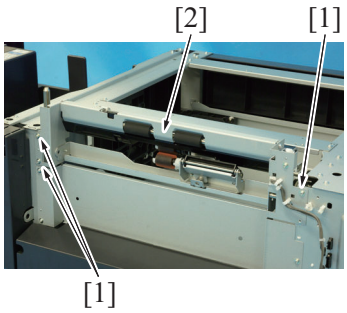

7. Remove three screws [1], and remove the paper feed unit [2].

8. To reinstall, reverse the order of removal.

6.7.7 PC control board (PCCB) (PC-410)

1. Remove the rear cover.
G.6.7.3 Rear cover (PC-410)

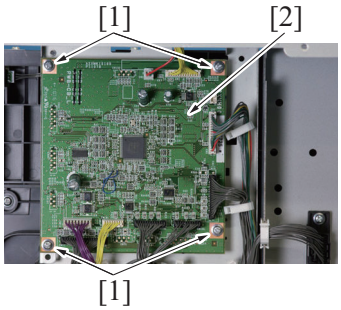

2. Disconnect all connectors on the PC control board.
3. Remove four screws [1], and remove the PC control board [2].

4. To reinstall, reverse the order of removal.

6.7.8 Tray 3 paper empty indicator board (PEIB/3) (PC-410)

1. Slide out the paper feed tray.

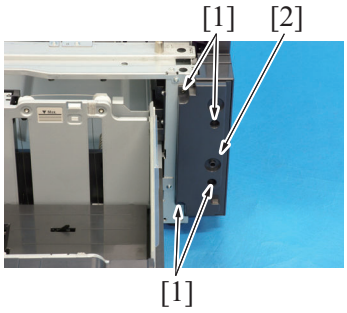

2. Remove four screws [1], and remove the right front cover [2].

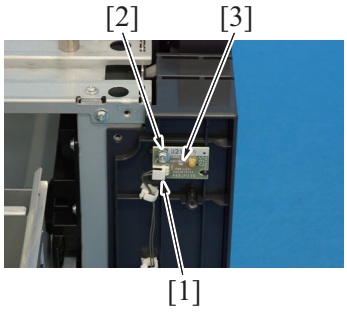

3. Disconnect the connector [1].
4. Remove the screw [2], and remove the tray 3 paper empty indicator board [3].

5. To reinstall, reverse the order of removal.

6.7.9 Paper feed motor (M131) (PC-410)

1. Remove the rear cover.
G.6.7.3 Rear cover (PC-410)

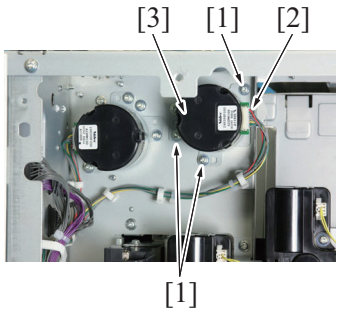

2. Remove three screws [1].
3. Disconnect the connector [2], and remove the paper feed motor assy [3].
   NOTE
   - **When mounting the paper feed motor assy, use care not to forget to set the belt to the gear.**

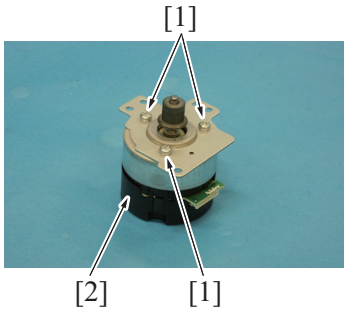

4. Remove three screws [1], and remove the paper feed motor [2].

5. To reinstall, reverse the order of removal.

6.7.10 Vertical transport motor (M132) (PC-410)

1. Remove the rear cover.
   G.6.7.3 Rear cover (PC-410)

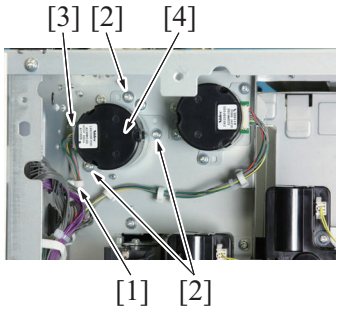

2. Remove the harness from the wire saddle [1].
3. Remove three screws [2].
4. Disconnect the connector [3], and remove the vertical transport motor assy [4].
   NOTE
   - **When mounting the vertical transport motor assy, use care not to forget to set the belt to the gear.**

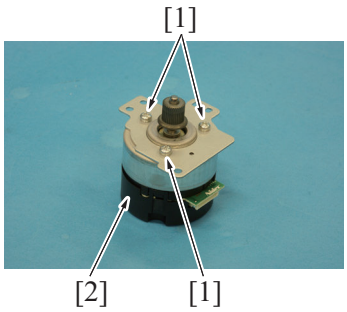

5. Remove three screws [1], and remove the vertical transport motor [2].

6. To reinstall, reverse the order of removal.

6.7.11 Elevator motor (M134) (PC-410)

1. Slide out the paper feed tray.
2. Remove the rear cover.
   G.6.7.3 Rear cover (PC-410)

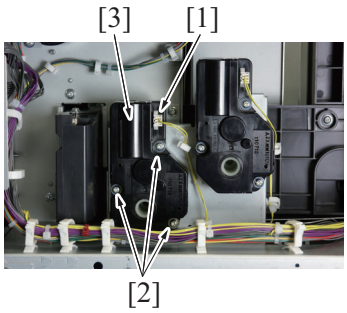

3. Disconnect the connector [1].
4. Remove three screws [2], and remove the elevator motor [3].

5. To reinstall, reverse the order of removal.

6.7.12 Shifter motor (M133) (PC-410)

1. Slide out the paper feed tray.
2. Remove the rear cover.
G.6.7.3 Rear cover (PC-410)

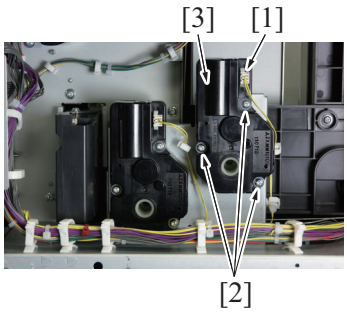

3. Disconnect the connector [1].
4. Remove three screws [2], and remove the shifter motor [3].

5. To reinstall, reverse the order of removal.

6.7.13 Wire (PC-410)

1. Slide out the paper feed tray.

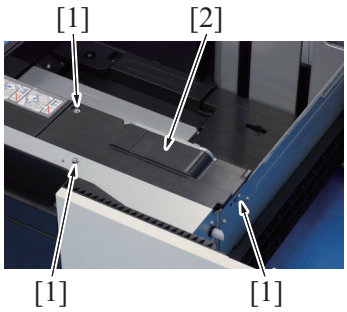

2. Remove three screws [1], and remove the cover [2].

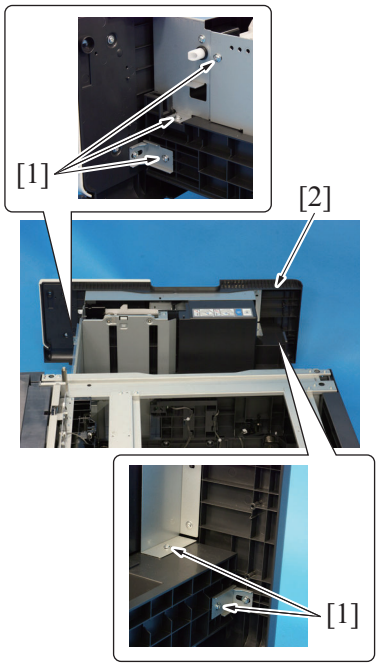

3. Remove five screws [1], and remove the front cover assy [2].

4. Remove the paper feed tray.
G.6.7.4 Paper feed tray (PC-410)

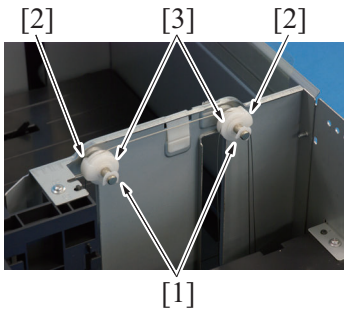

5. Remove two C-rings [1].
6. Remove two pulley covers [2].
7. Remove two pulleys [3].

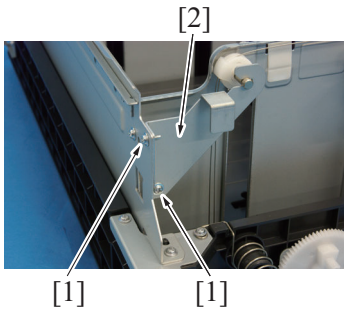

8. Remove two screws [1], and remove the metal plate [2].

9. Remove six screws [1] of the right paper guide plate.

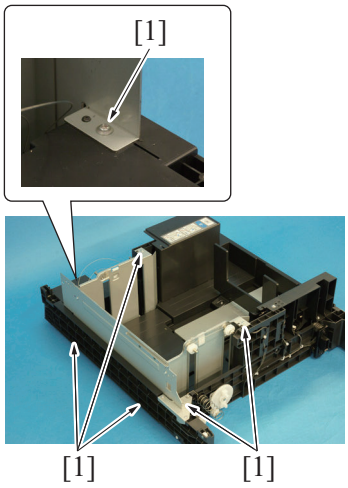

10. Remove the C-ring [1].
11. Remove two pulley covers [2].
12. Remove two pulleys [3].

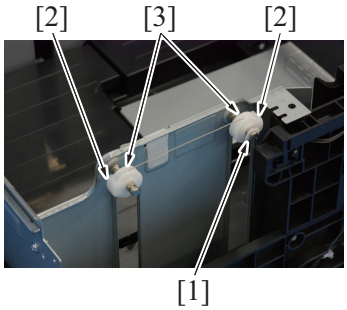

13. Remove three cable holding jigs (white) [1] and the cable holding jig (black) [2], and remove the main tray [3].
NOTE
- **Use care not to bend the wires.**

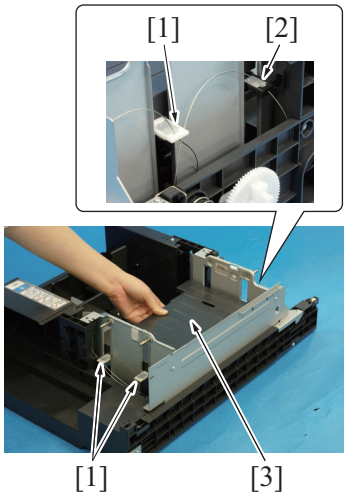

14. Remove the right paper guide plate assy [1].

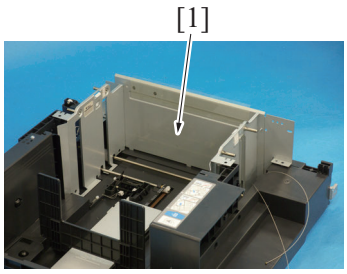

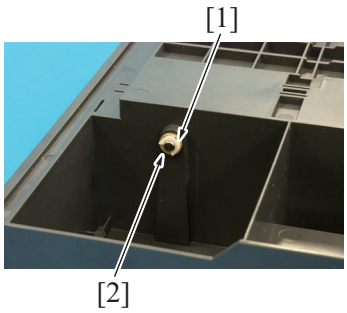

15. Turn the tray upside down.
16. Remove the C-ring [1] and the bushing [2].

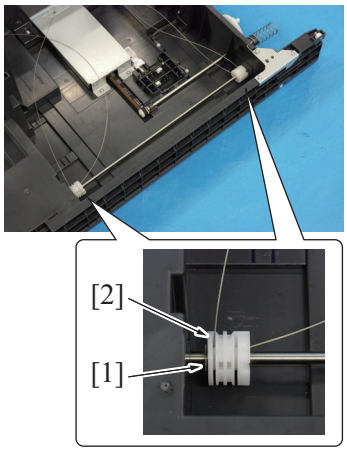

17. Turn the tray back to the original status.
18. Remove two C-rings [1] and two wire pulleys [2].
19. Remove the wire from the wire pulley [2].
    NOTE
    - **Take care not to lose the pin.**
    - **When reinstalling the wire pulley [2], check that the direction of the wire coming from both wire pulleys are the same.**

20. To reinstall, reverse the order of removal.

6.8 Disassembly/reassembly procedure (JS-506)

6.8.1 Exit tray 1 (JS-506)

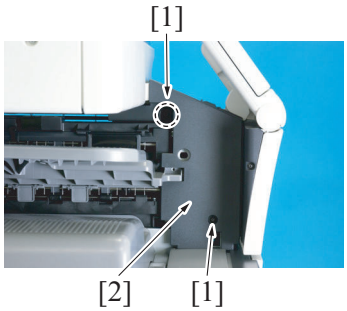

1. Remove two screws [1], and remove the control panel left cover/1 [2].

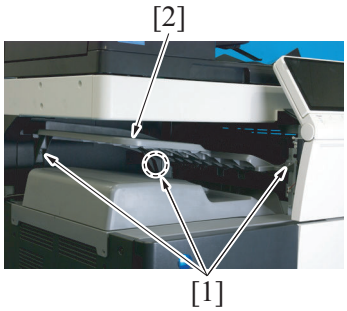

2. Remove three screws [1], and remove the exit tray [2].

3. Reinstall the above parts following the removal steps in reverse.

6.8.2 Exit tray 2 (JS-506)

1. Remove the job separator.
   G.6.8.3 Job separator (JS-506)

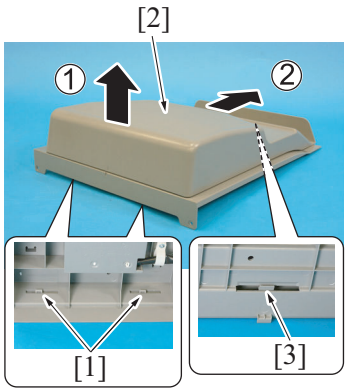

2. Remove two claws [1] and move the exit tray 2 [2] upward.
3. Slide the exit tray 2 [2] to unlock the claws [3], and remove the exit tray 2 [2].

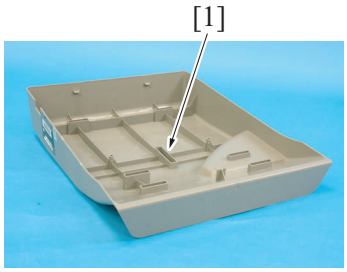

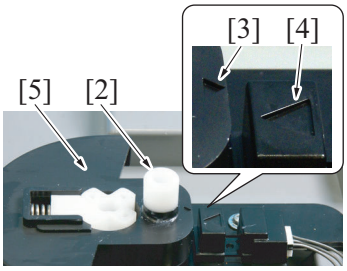

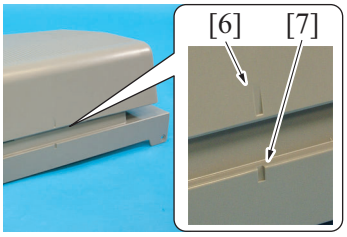

NOTE

- **When mounting the exit tray 2, mount the exit tray 2 in the following step so that the shaft [2] of the actuator can be set to the groove [1] of the exit tray 2.**
- **Adjust the actuator [5] so that the positioning marks [3] and [4] will be aligned.**
- **Press the exit tray 2 down with the positioning mark [6] for the exit tray 2 and the positioning mark [7] for the shift unit being aligned.**

4. Reinstall the above parts following the removal steps in reverse.

6.8.3 Job separator (JS-506)

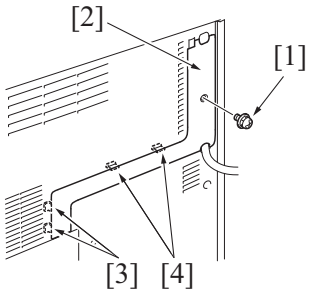

1. Remove the screw [1], and remove the cover [2].

NOTE

- **When mounting the cover, insert two claws [3] into the holes on the main unit cover first. Then fit two claws [4] into the holes. Be careful not to pinch the harness.**

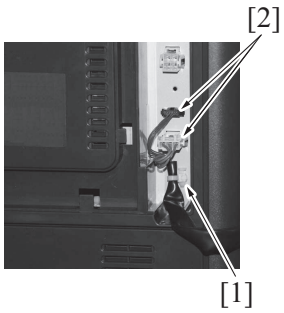

2. Remove the cable tie [1], and disconnect two connectors [2].

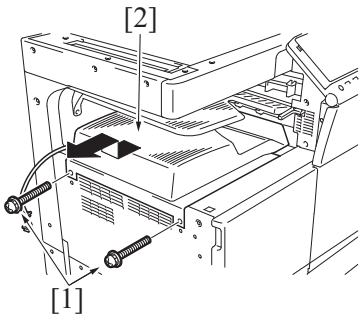

3. Remove two screws [1], and remove the job separator [2].

4. Reinstall the above parts following the removal steps in reverse.

6.8.4 Sensor unit (JS-506)

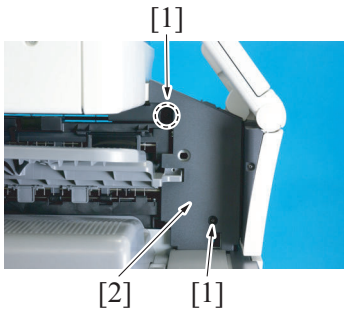

1. Remove two screws [1], and remove the control panel left cover/1 [2].

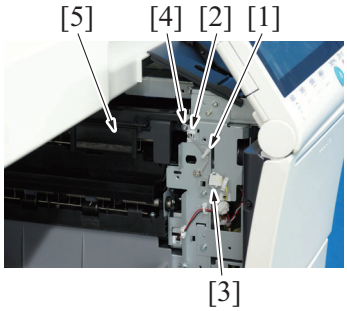

2. Remove the harnesses from the wire saddle [1] and the edge cover [2].
3. Disconnect the connector [3].
4. Remove the screw [4], and remove the sensor unit [5].

5. Reinstall the above parts following the removal steps in reverse.

6.8.5 JS control board (JSCB) (JS-506)

1. Remove the job separator.
   G.6.8.3 Job separator (JS-506)
2. Remove the exit tray 2.
   G.6.8.2 Exit tray 2 (JS-506)

3. Remove the cover [1].

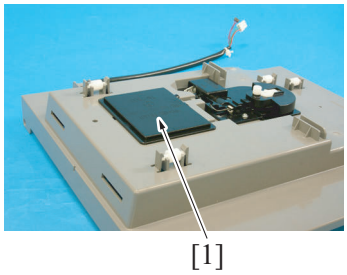

4. Disconnect three connectors [1].
5. Remove four screws [2], and remove two ground terminals [3].
6. Remove the JS control board [4].

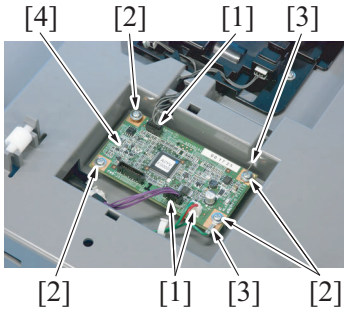

7. Reinstall the above parts following the removal steps in reverse.

6.8.6 Tray shift motor (M1) (JS-506)

1. Remove the job separator.
   G.6.8.3 Job separator (JS-506)
2. Remove the exit tray 2.
   G.6.8.2 Exit tray 2 (JS-506)

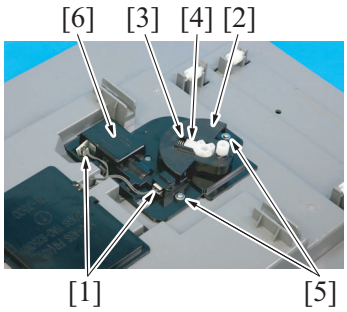

3. Disconnect two connectors [1].
4. Remove the actuator [2].
   NOTE
   - **Be careful not to lose the spring [3] and stopper [4].**
5. Remove two screws [5], and remove the cover [6].

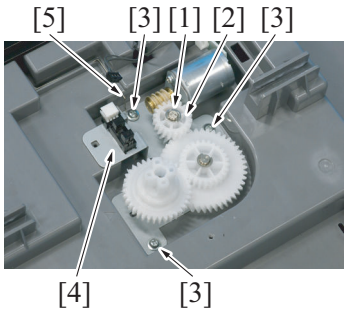

6. Remove the E-ring [1], and remove the gear [2].
7. Remove three screws [3], and remove the tray shift motor drive assy [4].
   NOTE
   - **When mounting the tray shift motor drive assy, place the earth terminal [5] on the plate for the tray shift motor drive assy and tighten the screw.**

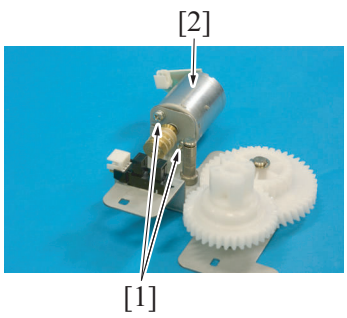

8. Remove two screws [1], and remove the tray shift motor [2].

9. Reinstall the above parts following the removal steps in reverse.

6.9 Disassembly/reassembly procedure (FS-534)

6.9.1 Rear cover (FS-534)

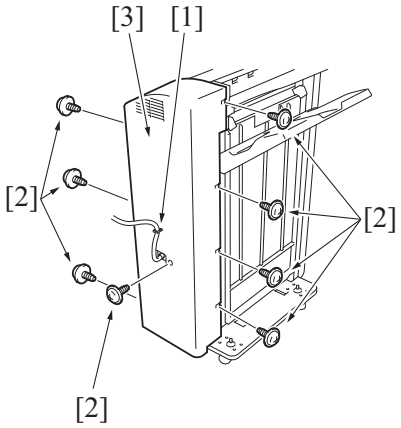

1. Remove the harness from the wire saddle [1].
2. Remove eight screws [2], and remove the rear cover [3].

3. Reinstall the above parts following the removal steps in reverse.

6.9.2 Front door (FS-534)

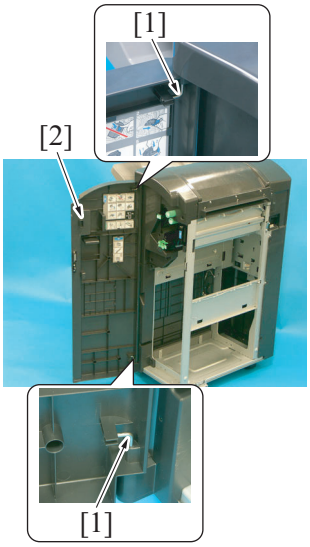

1. Remove the upper and lower stoppers [1], and remove the front door [2].

2. Reinstall the above parts following the removal steps in reverse.

6.9.3 Front upper cover (FS-534)

1. Remove the front door.
G.6.9.2 Front door (FS-534)

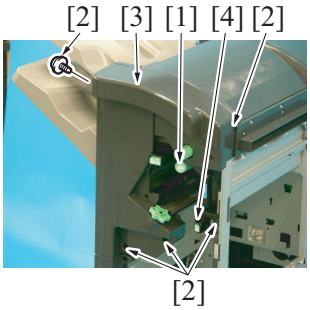

2. Remove the dial (FS5) [1].
3. Remove five screws [2], and remove the front upper cover [3].
NOTE
- **When the saddle unit is attached, move the guide plate [4] and then remove the front upper cover.**

4. Reinstall the above parts following the removal steps in reverse.

6.9.4 Finisher (FS-534)

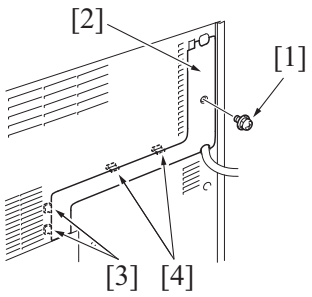

1. Remove the screw [1], and remove the cover [2].
   NOTE
   - **When mounting the cover, insert two claws [3] into the holes on the main unit cover first. Then fit two claws [4] into the holes.**
   - **Be careful not to pinch the harness.**

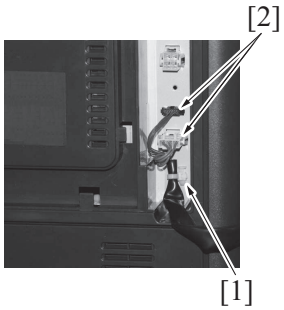

2. Remove the cable tie [1], and disconnect two connectors [2].

3. Open the front door.

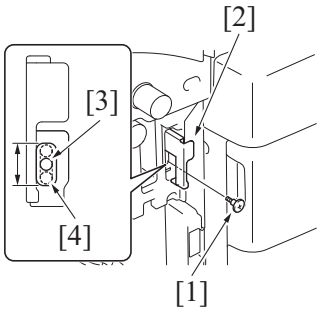

4. Remove the screw [1], and pull out the lever [2].
   NOTE
   - **At the time of the finisher installation, make sure that the screw hole [3] locates within the scope of the mounting hole of the lever [4].**

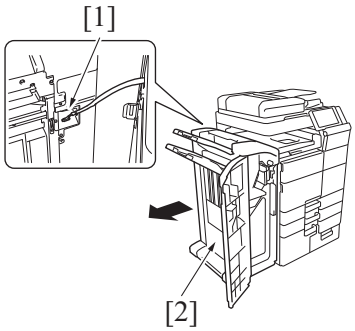

5. Disconnect the connector [1].
6. Remove the finisher [2] from the main body.

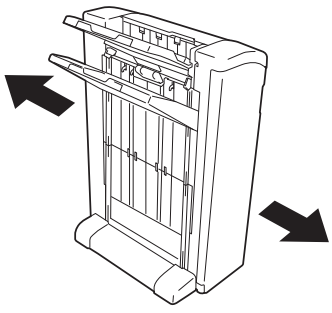

⚠CAUTION
- **When transporting the finisher, make sure to push it to the direction as shown in the illustration. (to prevent turnover during transportation).**

7. Reinstall the above parts following the removal steps in reverse.

6.9.5 Horizontal transport unit (FS-534)

1. Remove the finisher from the main body.
   G.6.9.4 Finisher (FS-534)

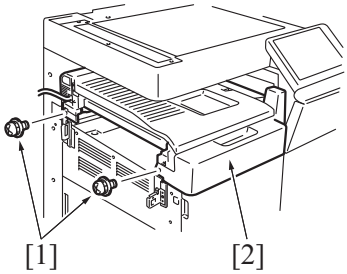

2. Remove two screws [1], and remove the horizontal transport unit [2].

3. Reinstall the above parts following the removal steps in reverse.

6.9.6 Stapler unit (FS-534)

1. Open the front door.
2. Remove the rear cover.
G.6.9.1 Rear cover (FS-534)

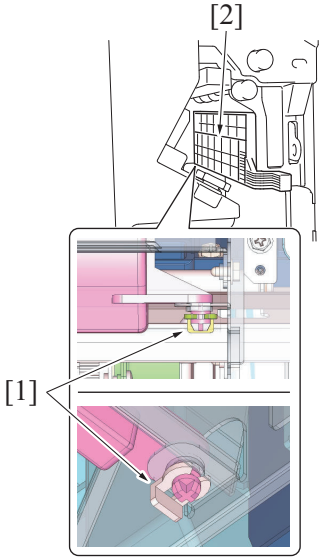

3. When the saddle unit is attached, remove the C-clip [1], and remove the guide plate [2].

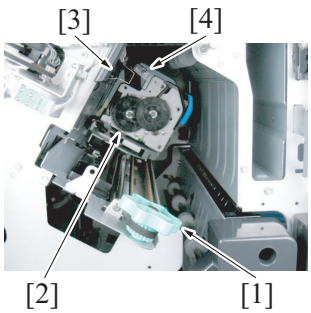

4. Rotate the stapler transfer dial [1] until the stapler [2] has been moved to the location shown in the figure (the location where the back-end stopper [3] does not interact with the clincher staple arm [4]).

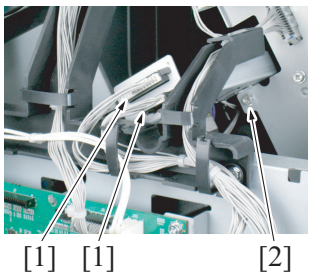

5. Disconnect two connectors [1] from the back of the finisher.
6. Remove the screw [2].

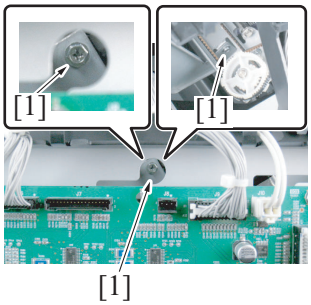

7. Remove the screw [1].

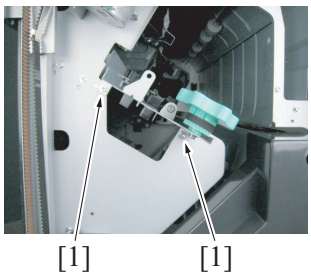

8. Remove two screws [1] from the front of the finisher.

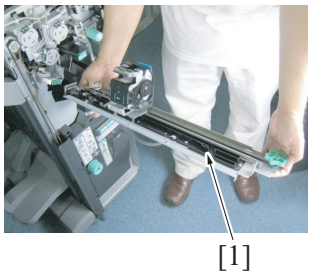

9. Remove the stapler assy [1] from the finisher.
NOTE
- **While removing the stapler assy [1], be careful not to hit the stapler against the finisher frame.**

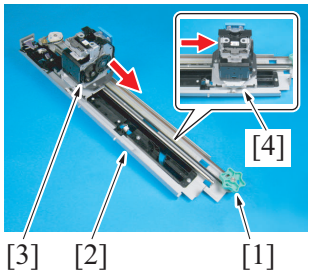

10. Put the stapler assy [2] on a stable workbench.
11. Rotate the stapler transfer dial [1] until the stapler unit [3] has been moved to the near side [4].

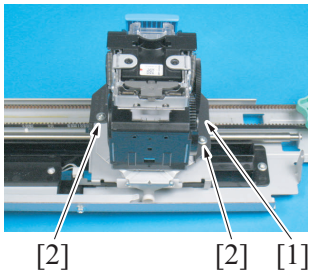

12. Remove two screws [2], and remove the cover [1].

13. Disconnect two connectors [1] of the stapler unit [2].

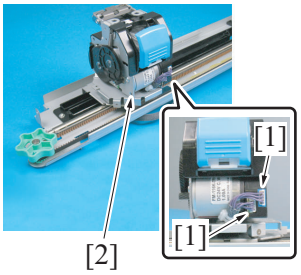

14. Flip the stapler assy [2] over.
15. Remove two E-rings [1] from the guide shafts.

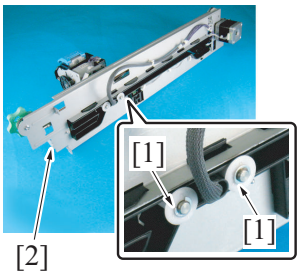

16. Remove the clear spacers [1] and white rollers [2] on both shafts [3].
NOTE
- **Be careful not to lose the clear spacers.**

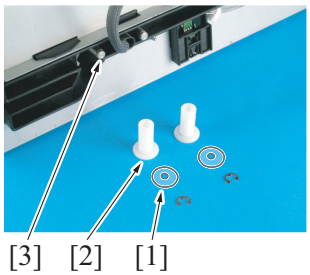

17. Slowly remove the stapler unit [1] from the stapler assy [4].
18. Remove the white rollers [2] on both shafts [3].
NOTE
- **Ensure that the harness does not get damaged in the process.**
- **Be careful not to lose the white rollers.**

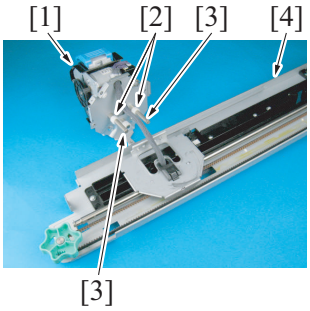

19. Remove two screws [3] of the stapler unit, and remove the stapler base plate [2] from the stapler unit [1].

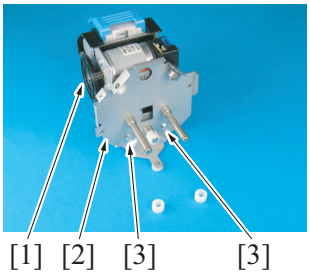

20. Reinstall the above parts following the removal steps in reverse.
NOTE
- **When installing the stapler unit, ensure that the two connectors [1] removed in the process 13 are put through the hole in the base plate [2] and connected to the stapler unit before attaching the base plate.**

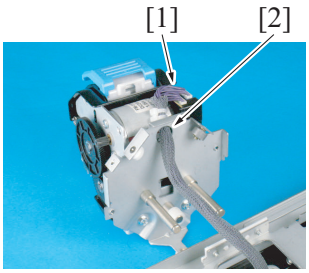

6.9.7 Sensor unit (FS-534)

1. Remove the horizontal transport unit
   G.6.9.5 Horizontal transport unit (FS-534)

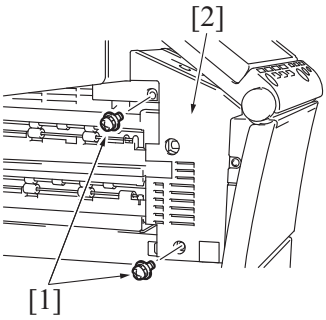

2. Remove two screws [1], and remove the control panel left cover/1 [2].

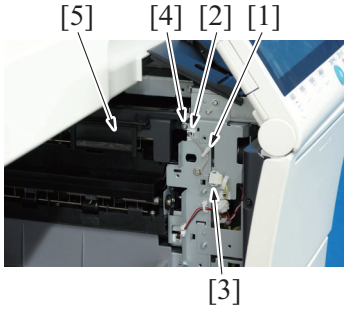

3. Remove the harnesses from the wire saddle [1] and the edge cover [2].
4. Disconnect the connector [3].
5. Remove the screw [4], and remove the sensor unit [5].
6. Reinstall the above parts following the removal steps in reverse.

6.9.8 FS control board (FSCB) (FS-534)

1. Remove the finisher from the main body.
   G.6.9.4 Finisher (FS-534)
2. Remove the rear cover.
   G.6.9.1 Rear cover (FS-534)

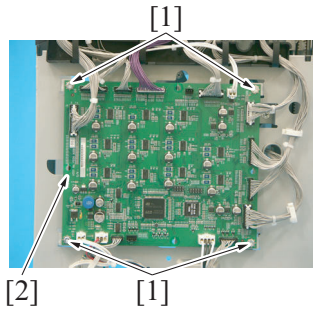

3. Remove all connectors from the FS control board.
4. Remove four screws [1], and remove the FS control board [2].
5. Reinstall the above parts following the removal steps in reverse.

6.9.9 RU transport motor (M1) (FS-534)

1. Remove the finisher from the main body.
   G.6.9.4 Finisher (FS-534)
2. Remove the horizontal transport unit.
   G.6.9.5 Horizontal transport unit (FS-534)

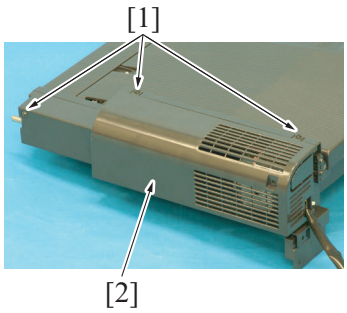

3. Remove three screws [1], and remove the rear cover [2] of the horizontal transport unit.

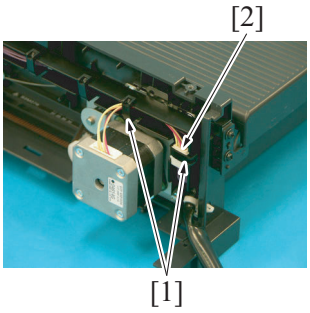

4. Remove the harness from two wire saddles [1].
5. Disconnect the connector [2].

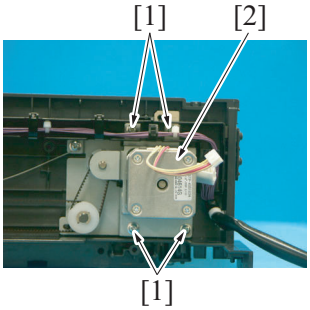

6. Remove four screws [1], and remove the RU transport motor assy [2].

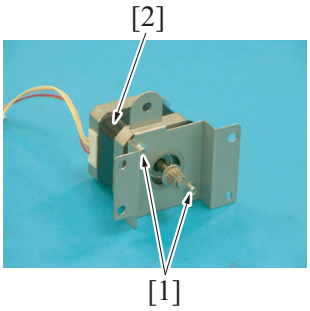

7. Remove two screws [1], and remove the RU transport motor [2].

8. Reinstall the above parts following the removal steps in reverse.

6.9.10 FNS entry transport motor (M2) (FS-534)

1. Remove the finisher from the main body.
   G.6.9.4 Finisher (FS-534)
2. Remove the rear cover.
   G.6.9.1 Rear cover (FS-534)

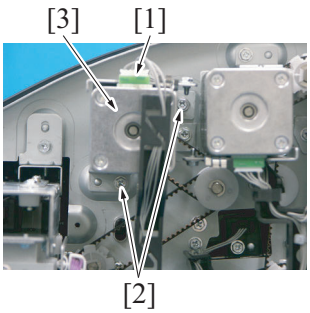

3. Disconnect the connector [1].
4. Remove two screws [2], and remove the FNS entry transport motor assy [3].

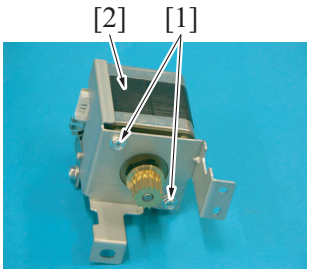

5. Remove two screws [1], and remove the FNS entry transport motor [2].

6. Reinstall the above parts following the removal steps in reverse.

6.9.11 FNS discharge motor (M3) (FS-534)

1. Remove the finisher from the main body.
   G.6.9.4 Finisher (FS-534)
2. Remove the rear cover.
   G.6.9.1 Rear cover (FS-534)

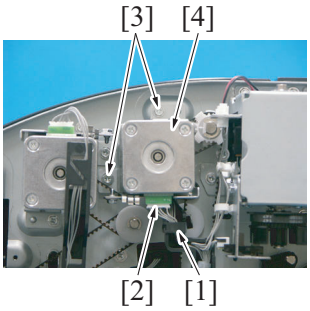

3. Remove the harness from the wire saddle [1], and disconnect the connector [2].
4. Remove two screws [3], and remove the FNS discharge motor assy [4].

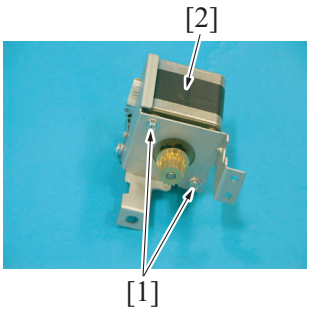

5. Remove two screws [1], and remove the FNS discharge motor [2].

6. Reinstall the above parts following the removal steps in reverse.

6.9.12 Receiving roller retraction motor (M4) (FS-534)

1. Remove the finisher from the main body.
   G.6.9.4 Finisher (FS-534)
2. Remove the front door.
   G.6.9.2 Front door (FS-534)
3. Remove the front upper cover.
   G.6.9.3 Front upper cover (FS-534)

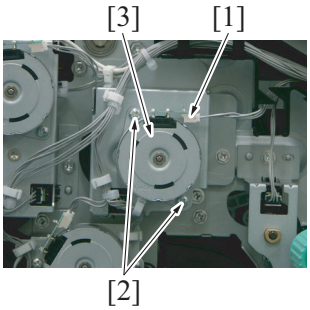

4. Disconnect the connector [1].
5. Remove two screws [2], and remove the receiving roller retraction motor [3].

6. Reinstall the above parts following the removal steps in reverse.

6.9.13 FNS paddle motor (M5) (FS-534)

1. Remove the finisher from the main body.
   G.6.9.4 Finisher (FS-534)

2. Remove the front door.
   G.6.9.2 Front door (FS-534)
3. Remove the front upper cover.
   G.6.9.3 Front upper cover (FS-534)

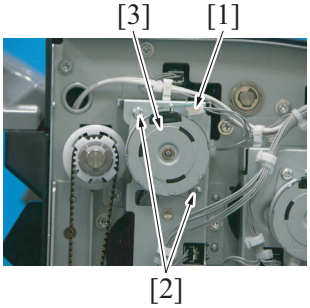

4. Disconnect the connector [1].
5. Remove two screws [2], and remove the FNS paddle motor [3].
6. Reinstall the above parts following the removal steps in reverse.

6.9.14 Trailing edge stopper motor (M6) (FS-534)

1. Remove the finisher from the main body.
   G.6.9.4 Finisher (FS-534)
2. Remove the front door.
   G.6.9.2 Front door (FS-534)
3. Remove the front upper cover.
   G.6.9.3 Front upper cover (FS-534)

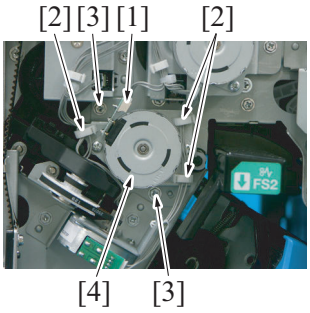

4. Disconnect the connector [1].
5. Remove the harness from three wire saddles [2].
6. Remove two screws [3], and remove the trailing edge stopper motor assy [4].

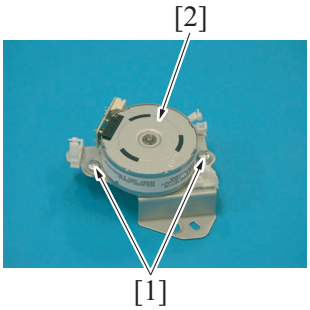

7. Remove two screws [1], and remove the trailing edge stopper motor [2].
8. Reinstall the above parts following the removal steps in reverse.

6.9.15 Alignment motor/front (M7) (FS-534)

1. Remove the finisher from the main body.
   G.6.9.4 Finisher (FS-534)
2. Remove the front door.
   G.6.9.2 Front door (FS-534)
3. Remove the front upper cover.
   G.6.9.3 Front upper cover (FS-534)

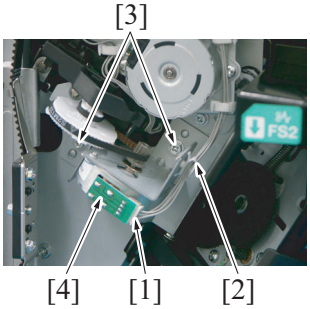

4. Disconnect the connector [1].
5. Remove the harness from the wire saddle [2].
6. Remove two screws [3], and remove the alignment motor/front assy [4].

7. Remove two screws [1], and remove the alignment motor/front [2].

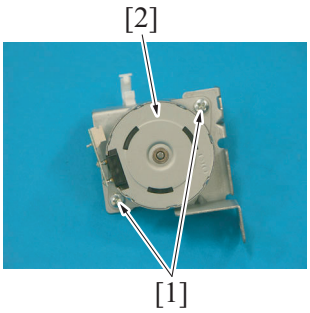

8. Reinstall the above parts following the removal steps in reverse.

6.9.16 Alignment motor/rear (M8) (FS-534)

1. Remove the finisher from the main body.
   G.6.9.4 Finisher (FS-534)
2. Remove the rear cover.
   G.6.9.1 Rear cover (FS-534)
3. Disconnect the connector [1].
4. Remove two screws [2], and remove the alignment motor/rear assy [3].

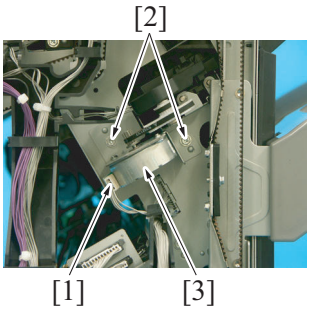

5. Remove two screws [1], and remove the alignment motor/rear [2].

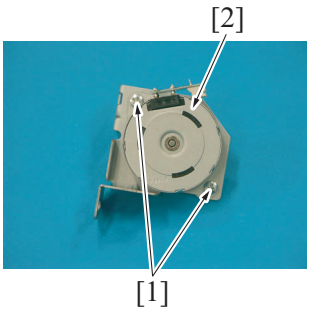

6. Reinstall the above parts following the removal steps in reverse.

6.9.17 Pre-eject drive motor (M9) (FS-534)

1. Remove the finisher from the main body.
   G.6.9.4 Finisher (FS-534)
2. Remove the rear cover.
   G.6.9.1 Rear cover (FS-534)
3. When the saddle unit is attached, open the front door and pull out the saddle unit.
4. Remove two screws [1], and remove the exit tray [2].

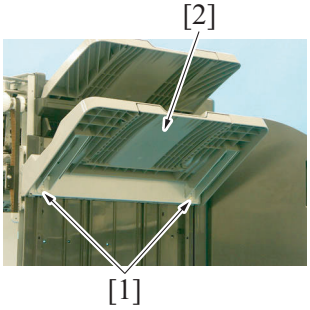

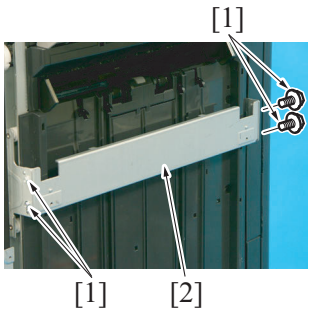

5. Remove four screws [1], and remove the plate [2].

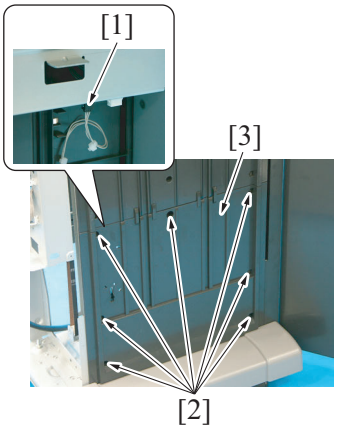

6. Disconnect the connector [1].
7. Remove seven screws [2], and remove the left lower cover [3].
   NOTE
   - **When the saddle unit is attached, disconnect two connectors.**

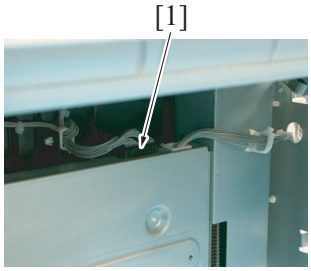

8. Disconnect the connector [1].

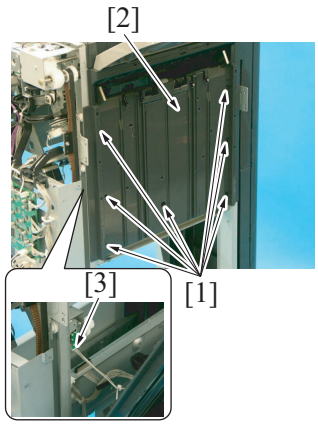

9. Remove seven screws [1], and remove the left upper cover [2].
10. Disconnect the connector [3].

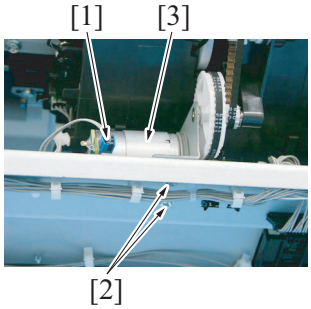

11. Disconnect the connector [1].
12. Remove two screws [2], and remove the pre-eject drive motor assy [3].

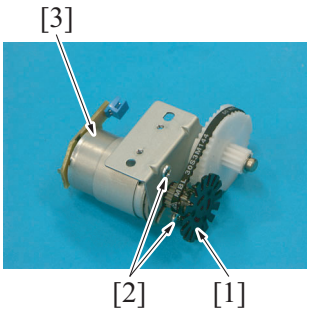

13. Remove the rotating disk [1].
14. Remove two screws [2], and remove the pre-eject drive motor [3].

15. Reinstall the above parts following the removal steps in reverse.

6.9.18 Bundle eject motor (M10) (FS-534)

1. Remove the finisher from the main body.
   G.6.9.4 Finisher (FS-534)
2. Remove the rear cover.
   G.6.9.1 Rear cover (FS-534)
3. When the saddle unit is attached, open the front door and pull out the saddle unit.

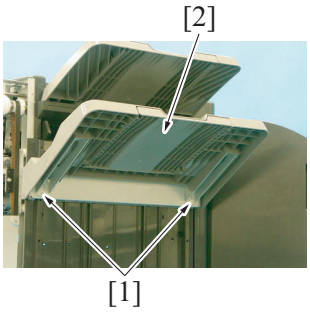

4. Remove two screws [1], and remove the exit tray [2].

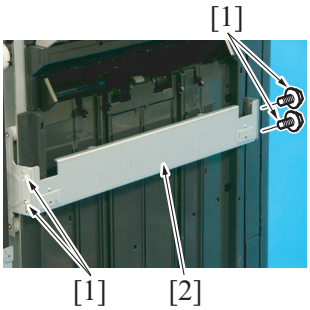

5. Remove four screws [1], and remove the plate [2].

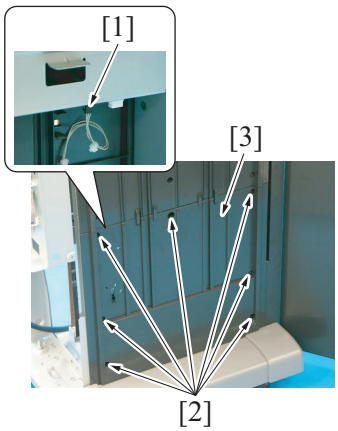

6. Disconnect the connector [1].
7. Remove seven screws [2], and remove the left lower cover [3].
   NOTE
   - **When the saddle unit is attached, disconnect two connectors.**

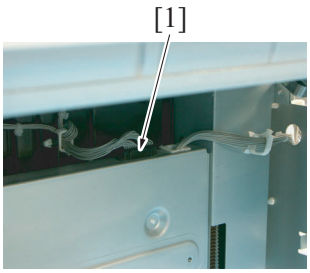

8. Disconnect the connector [1].

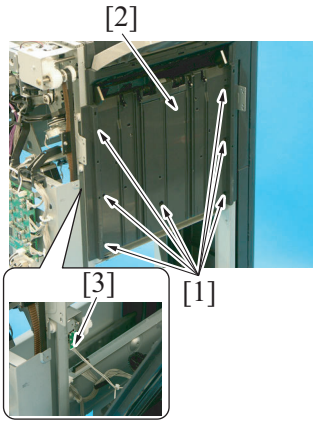

9. Remove seven screws [1], and remove the left upper cover [2].
10. Disconnect the connector [3].

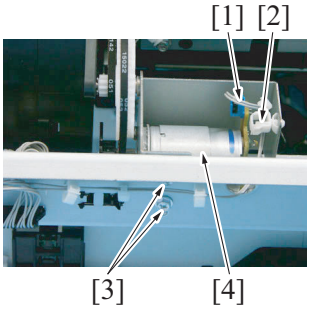

11. Disconnect the connector [1], and remove the harness from the wire saddle [2].
12. Remove two screws [3], and remove the bundle eject motor assy [4].

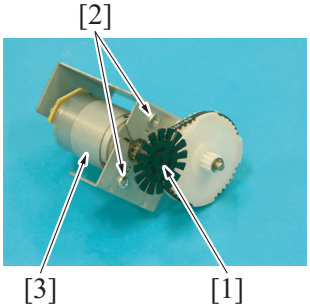

13. Remove the rotating disk [1].
14. Remove two screws [2], and remove the bundle eject motor [3].

15. Reinstall the above parts following the removal steps in reverse.

6.9.19 Main tray up/down motor (M11) (FS-534)

1. Remove the finisher from the main body.
   G.6.9.4 Finisher (FS-534)
2. Remove the rear cover.
   G.6.9.1 Rear cover (FS-534)

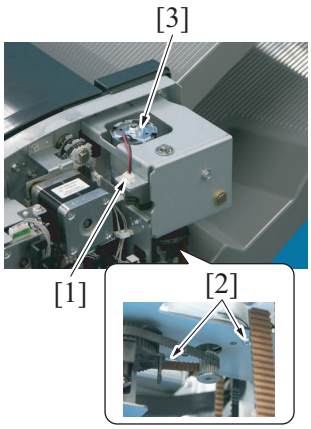

3. Disconnect the connector [1].
4. Remove two screws [2], and remove the main tray up/down motor [3].
5. Reinstall the above parts following the removal steps in reverse.

6.9.20 Paper receiving control motor (M12) (FS-534)

1. Remove the finisher from the main body.
   G.6.9.4 Finisher (FS-534)
2. Remove the rear cover.
   G.6.9.1 Rear cover (FS-534)
3. When the saddle unit is attached, open the front door and pull out the saddle unit.

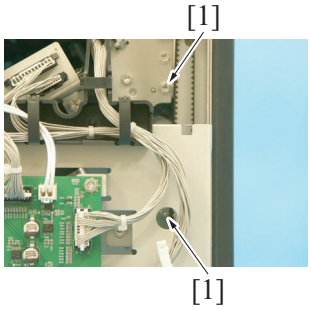

4. Remove two screws [1].

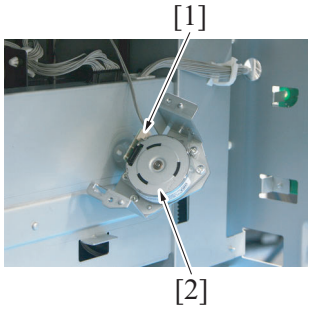

5. Disconnect the connector [1], and remove the paper receiving control motor assy [2].

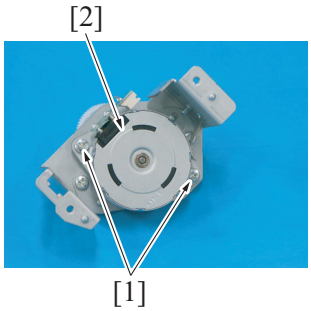

6. Remove two screws [1], and remove the paper receiving control motor [2].
7. Reinstall the above parts following the removal steps in reverse.

6.9.21 Side stapler movement motor (M13) (FS-534)

1. Remove the finisher from the main body.
   G.6.9.4 Finisher (FS-534)
2. Remove the rear cover.
   G.6.9.1 Rear cover (FS-534)
3. When the saddle unit is attached, open the front door and pull out the saddle unit.

4. Disconnect the connector [1].

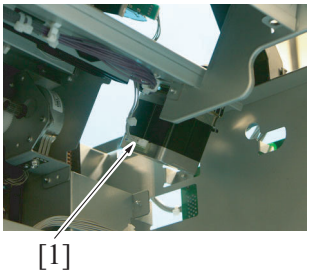

5. Remove two screws [1], and remove the side stapler movement motor [2].

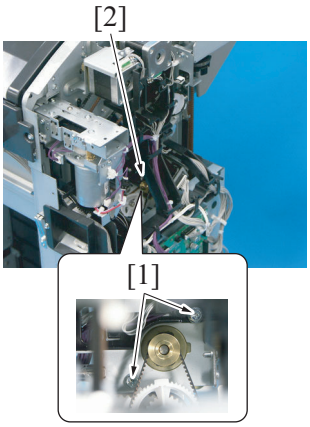

6. Reinstall the above parts following the removal steps in reverse.

6.10 Disassembly/reassembly procedure (PK-520)

6.10.1 Punch kit (PK-520)

1. Remove the finisher from the main body.
G.6.9.4 Finisher (FS-534)

2. Remove the harness from the wire saddle [1].
3. Remove eight screws [2], and remove the rear cover [3] of the finisher.

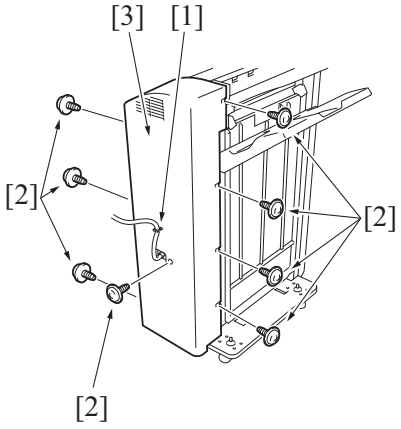

4. Remove the harness from five wire saddles [1].

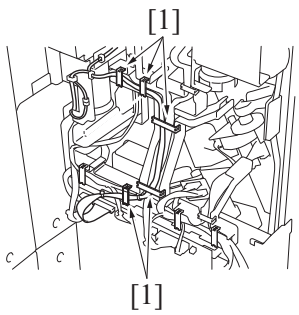

5. Disconnect the connector [1].

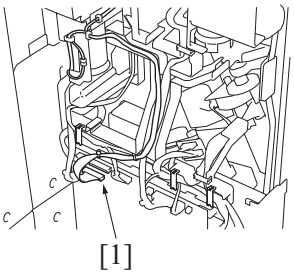

6. Remove the screw [1], and remove the punch kit [2].

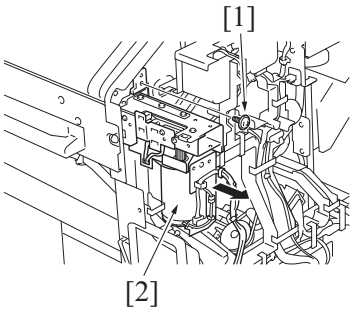

7. Reinstall the above parts following the removal steps in reverse.

6.11 Disassembly/reassembly procedure (SD-511)

6.11.1 Front cover (SD-511)

1. Remove the screw [1], and remove the jam clearing dial [2].
2. Remove four screws [3], and remove the front cover [4].

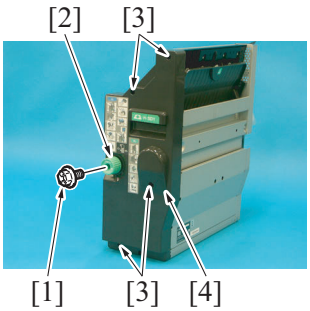

3. Reinstall the above parts following the removal steps in reverse.

6.11.2 Saddle unit (SD-511)

CAUTION

- Be careful not to catch your finger in the edge of the rail when mounting the saddle unit on the right rail for the saddle unit installation.
- Be careful not to jam your finger in the connecting section of the pantograph.

1. Remove the finisher.
G.6.9.4 Finisher (FS-534)

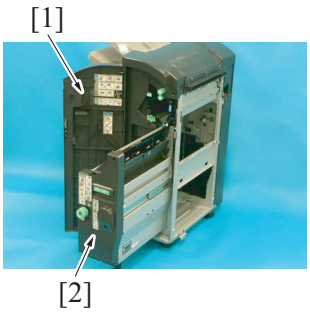

2. Open the front door [1] of the finisher.
3. Pull out the saddle unit [2].

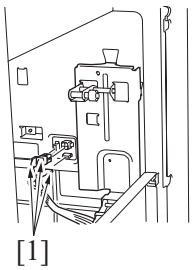

4. Disconnect three connectors [1].

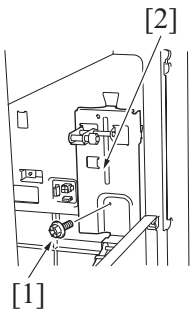

5. Remove the screw [1], and remove the pantograph [2].

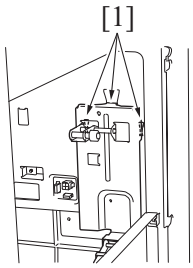

NOTE

- **For installation of the pantograph, insert three hooks [1] on the pantograph of the saddle unit into the back holes inside the finisher.**

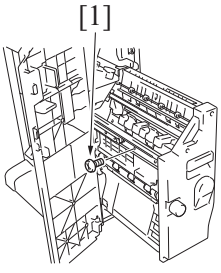

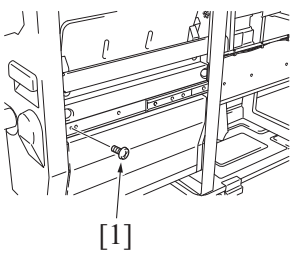

6. Remove two screws [1].

7. Insert the rail [1] on the right side into the finisher.

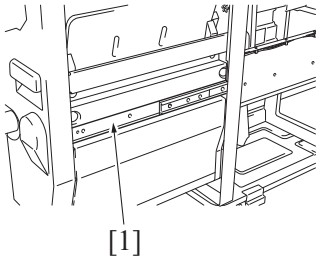

8. Grip the portion as shown in the illustration [1] to raise the saddle unit and take it out.
NOTE
- **For installation of the saddle unit, insert two hooks on the left rail [3] into the two holes of the saddle unit [2].**

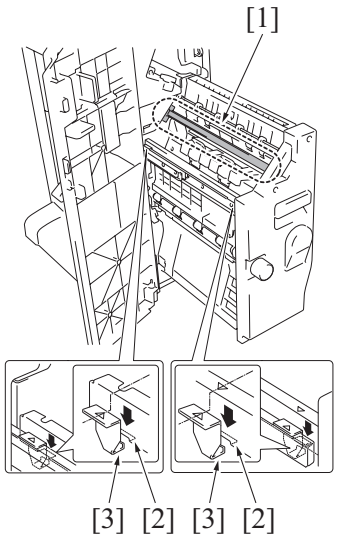

9. Reinstall the above parts following the removal steps in reverse.

⚠CAUTION

- Be careful not to catch your finger in the edge of the rail when mounting the saddle unit on the right rail for the saddle unit installation.

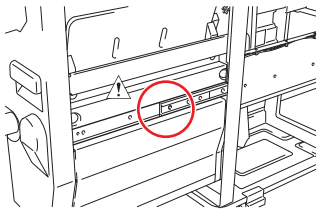

- Be careful not to jam your finger in the connecting section of the pantograph.

⚠CAUTION

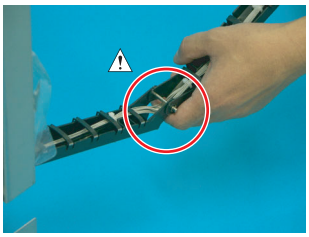

6.11.3 Paper exit tray (SD-511)



1. Remove the pin [1], and remove the exit lever [2].

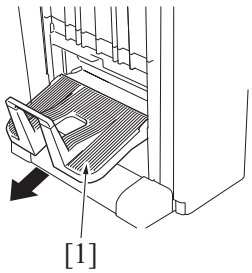

2. Remove the paper exit tray [1].

3. Reinstall the above parts following the removal steps in reverse.

6.11.4 Staple unit (SD-511)

1. Remove the saddle unit.
   G.6.11.2 Saddle unit (SD-511)
2. Remove the front cover.
   G.6.11.1 Front cover (SD-511)

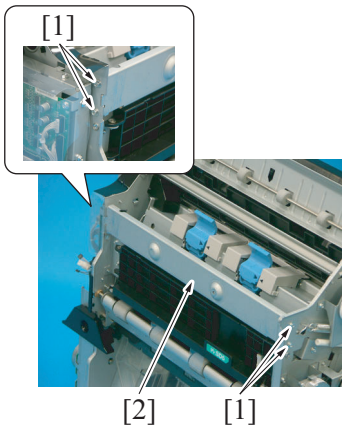

3. Remove four screws [1], and remove the plate [2].

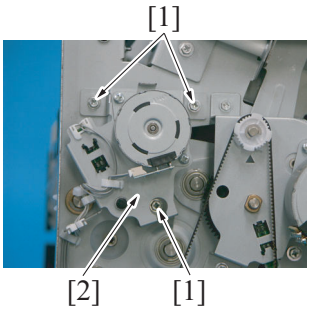

4. Remove three screws [1], and remove the tri-folding guide motor assy [2].

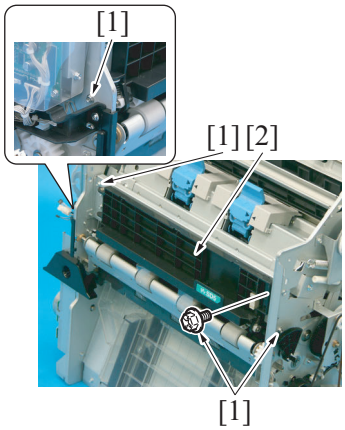

5. Remove four screws [1], and remove the conveyance assy [2].

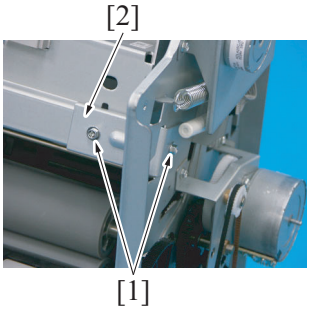

6. Remove two screws [1], and remove the plate [2].

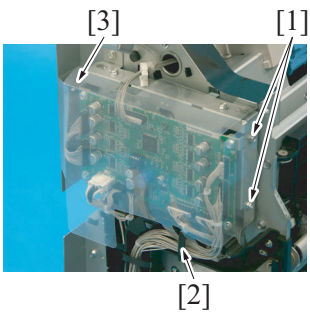

7. Remove two screws [1].
8. Detach the board support film [3] from the harness guide tabs [2].

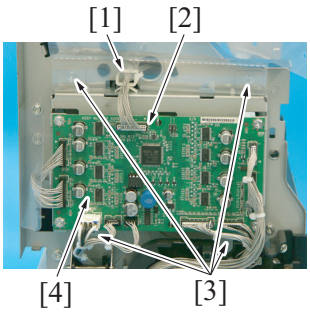

9. Remove the harness from the wire saddle [1].
10. Disconnect the connector [2].
11. Remove four screws [3], and remove the SD drive board assy [4].

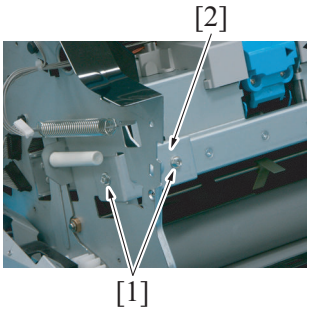

12. Remove two screws [1], and remove the plate [2].

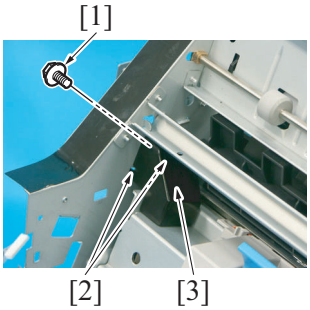

13. Remove the screw [1].
14. Release two tabs [2], and remove the cover [3].

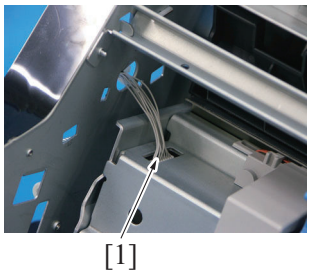

15. Disconnect the connector [1].

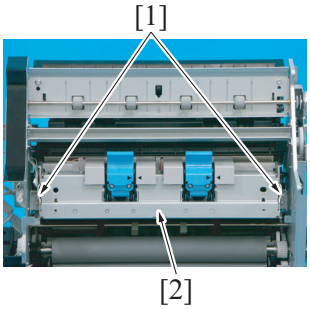

16. Remove two screws [1], and remove the staple unit [2].

17. Reinstall the above parts following the removal steps in reverse.

6.11.5 SD drive board (SDDB) (SD-511)

1. Remove the saddle unit.
G.6.11.2 Saddle unit (SD-511)

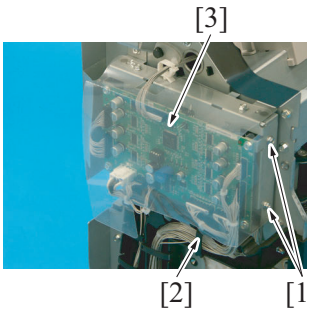

2. Remove two screws [1].
3. Remove the board support film [3] from the harness guide [2].

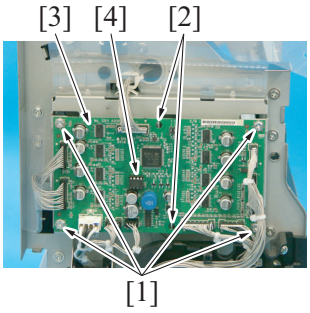

4. Disconnect all the connectors from the SD drive board.
5. Remove four screws [1].
6. Detach the SD drive board [3] from the two tabs [2].

NOTE

- **When the SD drive board (SDDB) has been replaced, be sure to remount EEPROM (U3) [4].**
  Remove EEPROM (U3) [4] from the old SD drive board and mount it on the new SD drive board.

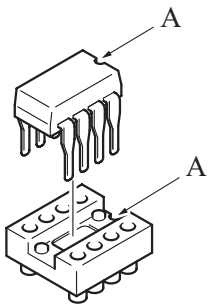

NOTE

- **When mounting EEPROM (U3), align the notches (indicated by "A" in the illustration).**

7. Reinstall the above parts following the removal steps in reverse.

NOTE

- **After replacing the SD drive board, be sure to install the latest firmware.**

6.11.6 SD transport motor (M1) (SD-511)

1. Remove the saddle unit.
   G.6.11.2 Saddle unit (SD-511)
2. Remove the front cover.
   G.6.11.1 Front cover (SD-511)

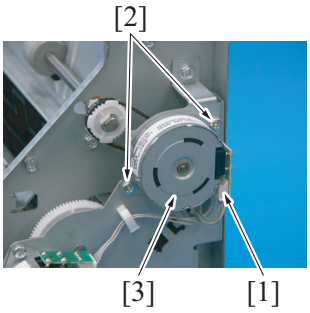

3. Disconnect the connector [1].
4. Remove two screws [2], and remove the SD transport motor [3].
5. Reinstall the above parts following the removal steps in reverse.

6.11.7 Paper discharge control motor (M2) (SD-511)

1. Remove the saddle unit.
   G.6.11.2 Saddle unit (SD-511)
2. Remove the front cover.
   G.6.11.1 Front cover (SD-511)

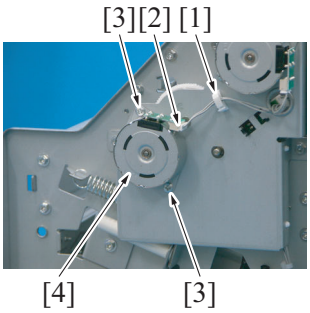

3. Remove the harness from the wire saddle [1], and disconnect the connector [2].
4. Remove two screws [3], and remove the paper discharge control motor [4].

5. Reinstall the above parts following the removal steps in reverse.

6.11.8 Alignment motor (M3) (SD-511)

1. Remove the saddle unit.
   G.6.11.2 Saddle unit (SD-511)
2. Remove the front cover.
   G.6.11.1 Front cover (SD-511)

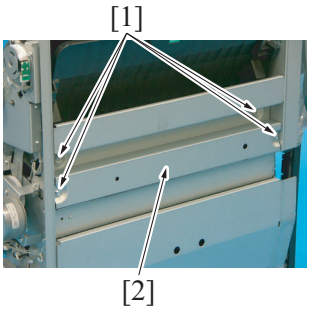

3. Remove four screws [1], and remove the plate [2].

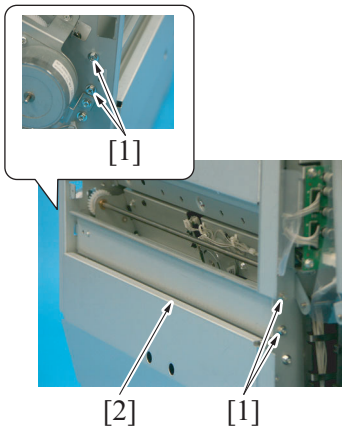

4. Remove four screws [1], and remove the plate [2].

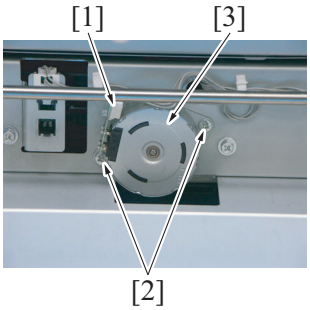

5. Disconnect the connector [1].
6. Remove two screws [2], and remove the alignment motor [3].

7. Reinstall the above parts following the removal steps in reverse.

6.11.9 Stopper drive motor (M4) (SD-511)

1. Remove the saddle unit.
   G.6.11.2 Saddle unit (SD-511)
2. Remove the front cover.
   G.6.11.1 Front cover (SD-511)

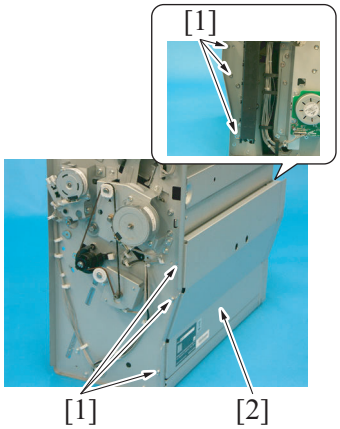

3. Remove six screws [1], and remove the plate [2].

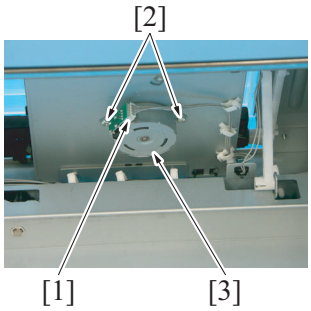

4. Disconnect the connector [1].
5. Remove two screws [2], and remove the stopper drive motor [3].

6. Reinstall the above parts following the removal steps in reverse.

6.11.10 Center fold roller motor (M5) (SD-511)

1. Remove the saddle unit.
   G.6.11.2 Saddle unit (SD-511)

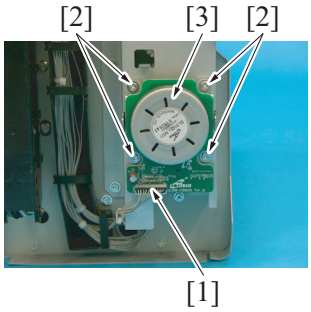

2. Disconnect the connector [1].
3. Remove four screws [2], and remove the center fold roller motor [3].

4. Reinstall the above parts following the removal steps in reverse.

6.11.11 Tri-folding guide motor (M6) (SD-511)

1. Remove the saddle unit.
   G.6.11.2 Saddle unit (SD-511)
2. Remove the front cover.
   G.6.11.1 Front cover (SD-511)

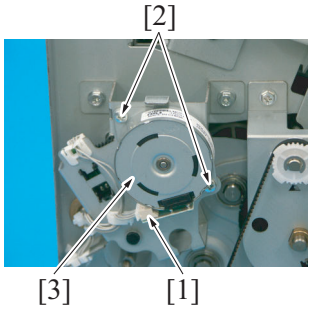

3. Disconnect the connector [1].
4. Remove two screws [2], and remove the tri-folding guide motor [3].

5. Reinstall the above parts following the removal steps in reverse.

6.11.12 SD paddle motor (M7) (SD-511)

1. Remove the saddle unit.
   G.6.11.2 Saddle unit (SD-511)

2. Remove the front cover.
G.6.11.1 Front cover (SD-511)

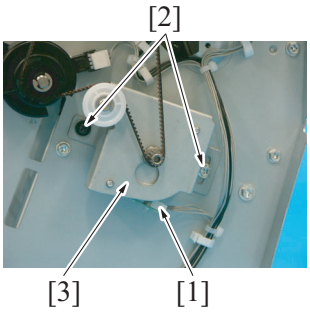

3. Disconnect the connector [1].
4. Remove two screws [2], and remove the SD paddle motor assy [3].

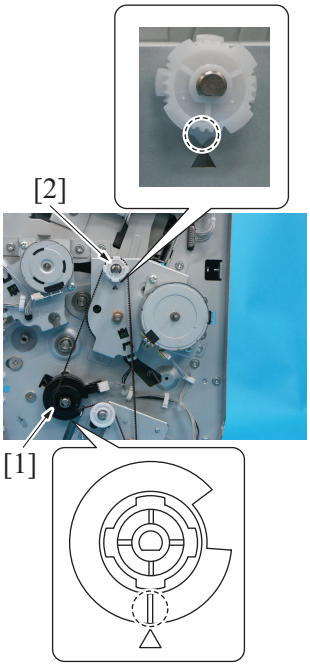

NOTE
- **When reinstalling the belt, align the portions of the gear [1] and the gear [2] indicated in the illustration with the triangular marking on the metal plate. Then, install the belt.**

5. Remove two screws [1], and remove the SD paddle motor [2].

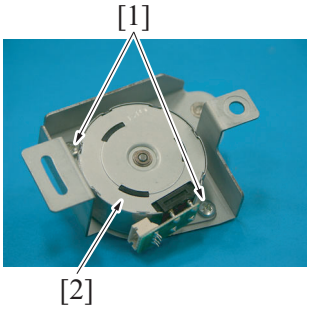

6. Reinstall the above parts following the removal steps in reverse.

6.11.13 Center fold guide motor (M8) (SD-511)

1. Remove the saddle unit.
G.6.11.2 Saddle unit (SD-511)
2. Remove the front cover.
G.6.11.1 Front cover (SD-511)

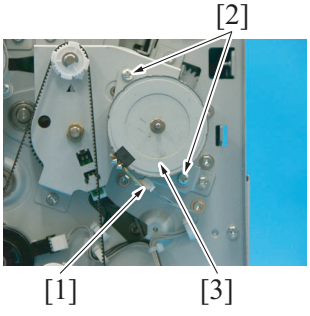

3. Disconnect the connector [1].
4. Remove two screws [2], and remove the center fold guide motor [3].

5. Reinstall the above parts following the removal steps in reverse.

6.11.14 Center fold knife motor (M9) (SD-511)

1. Remove the saddle unit.
   G.6.11.2 Saddle unit (SD-511)
2. Remove the front cover.
   G.6.11.1 Front cover (SD-511)

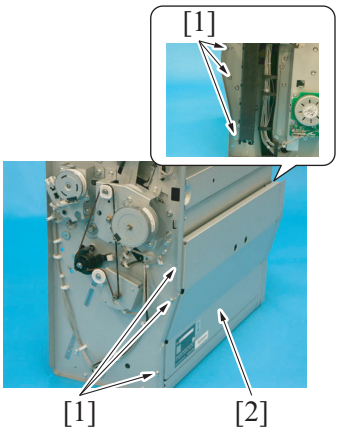

3. Remove six screws [1], and remove the plate [2].

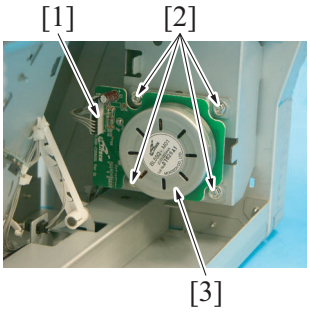

4. Disconnect the connector [1].
5. Remove four screws [2], and remove the center fold knife motor [3].

6. Reinstall the above parts following the removal steps in reverse.

6.11.15 Stopper solenoid (SD1) (SD-511)

1. Remove the saddle unit.
   G.6.11.2 Saddle unit (SD-511)
2. Remove the front cover.
   G.6.11.1 Front cover (SD-511)

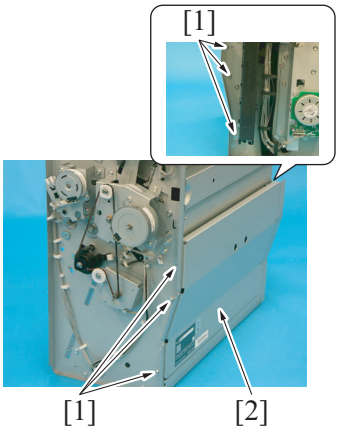

3. Remove six screws [1], and remove the plate [2].

4. Place the saddle unit as shown in the illustration.

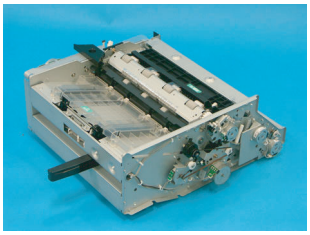

5. Remove two stoppers [1], and remove the guide plate [2].

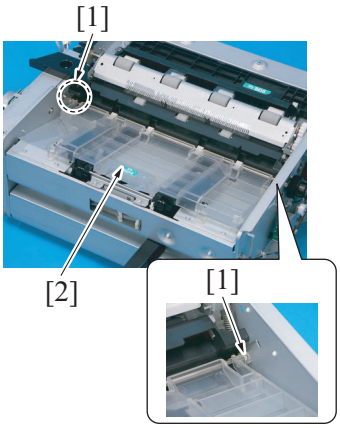

6. Slide the lever unit [3] upward.
7. Remove two screws [1], and disconnect the connector [2].

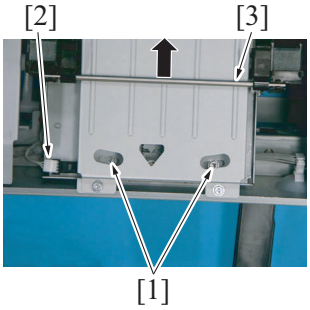

8. Raise the saddle unit.

9. Disconnect the connector [1], and remove the harness from three wire saddles [2].

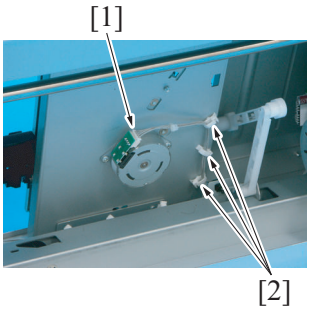

10. Disconnect the connector [1], and remove the drive lever [2].

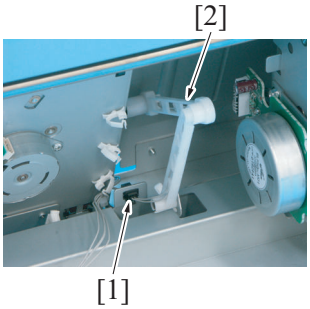

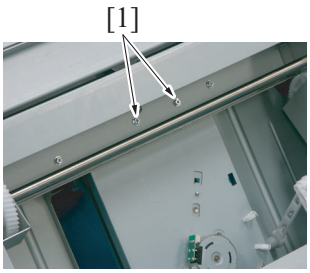

11. Remove two screws [1].

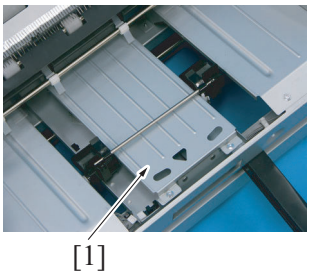

12. Remove the guide plate assy [1].

NOTE

- **When reinstalling the guide plate assy, perform mechanical adjustment.**
  I.23.1.1 Half-fold skew adjustment

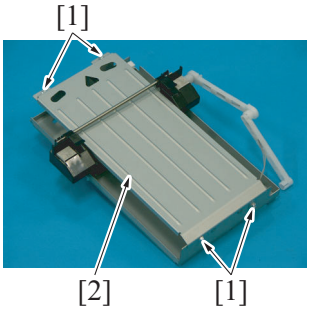

13. Remove four screws [1], and remove the plate [2].

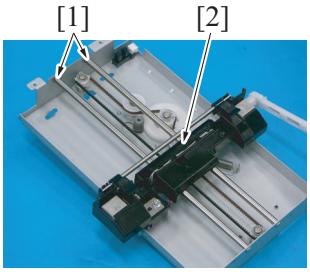

14. Remove two E-rings [1], and remove the stopper guide [2].

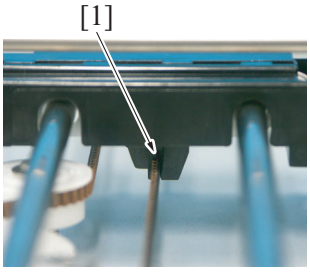

NOTE

- **When reinstalling the stopper guide, fit the belt into the stopper guide groove [1].**

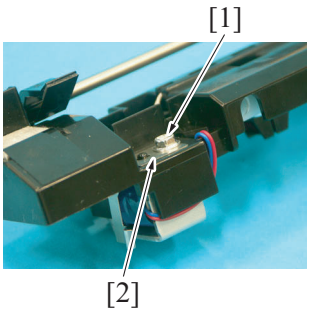

15. Remove the screw [1], and remove the plate [2].

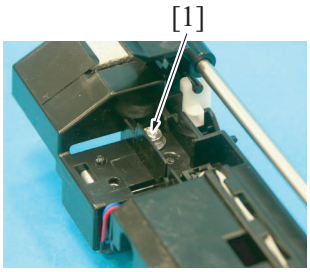

16. Remove the screw [1].

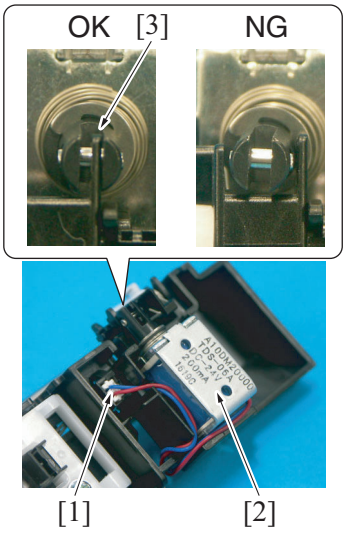

17. Disconnect the connector [1], and remove the stopper solenoid [2].
NOTE
- **When reinstalling the stopper solenoid, fit its tip into the place [3] shown in the illustration.**

18. Reinstall the above parts following the removal steps in reverse.

6.12 Disassembly/reassembly procedure (FS-533)

6.12.1 Front cover (FS-533)

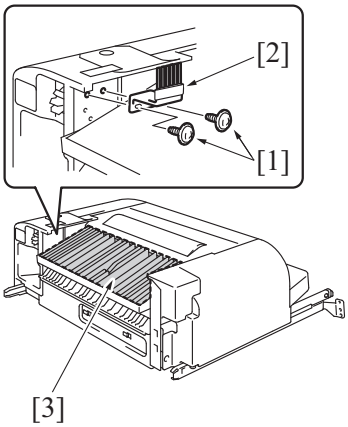

1. Remove two screws [1] and remove the antistatic brush [2].
NOTE
- **Make sure not to deform the brush by touching it.**
- **Make sure not to touch the upper surface of the transport unit [3] as it damages the guide plates.**

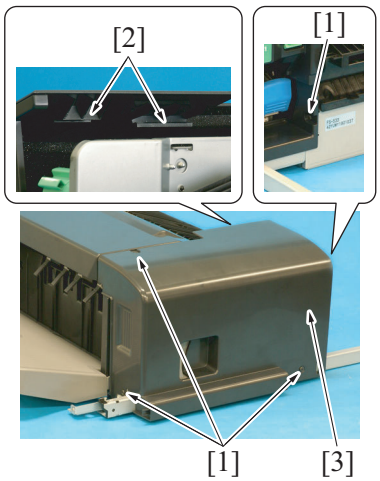

2. Remove four screws [1] and two tabs [2], and remove the front cover [3].

NOTE
- **When the punch kit (PK-519) is installed, the cover [1] should be removed.**

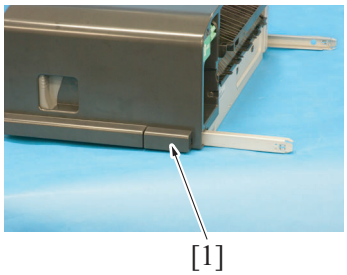

3. Reinstall the above parts following the removal steps in reverse.

6.12.2 Upper cover (FS-533)

1. Remove the front cover.
   G.6.12.1 Front cover (FS-533)
2. Remove the rear cover.
   G.6.12.3 Rear cover (FS-533)

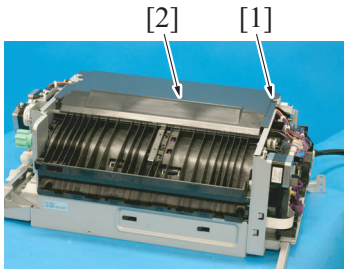

3. Remove the screw [1], and remove the cover [2].

4. Reinstall the above parts following the removal steps in reverse.

6.12.3 Rear cover (FS-533)

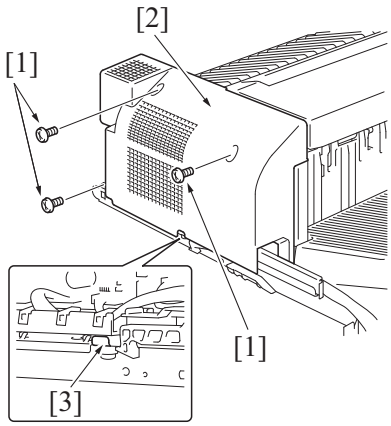

1. Remove three screws [1], and remove the rear cover [2].
   NOTE
   - **When mounting the rear cover, hook the tab [3] on the plate to the rear cover.**

2. Reinstall the above parts following the removal steps in reverse.

6.12.4 Finisher (FS-533)

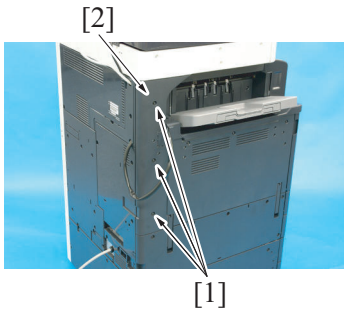

1. Remove three screws [1], and remove the rear left cover [2] of the main body.

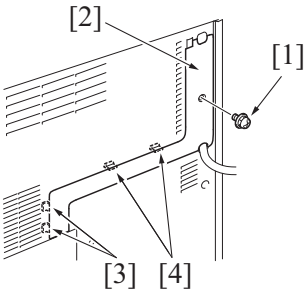

2. Remove the screw [1], and remove the cover [2].
NOTE
- **When mounting the cover, insert two claws [3] into the holes on the main unit cover first. Then fit two claws [4] into the holes.**
- **Be careful not to pinch the harness.**

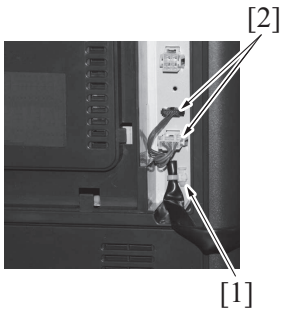

3. Remove the cable tie [1], and disconnect two connectors [2].

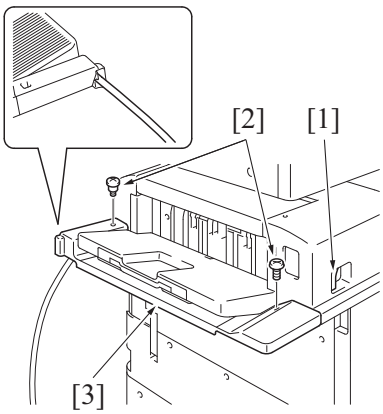

4. Slide the finisher by pulling the lever [1].
5. Remove two screws [2], and remove the cover [3].
NOTE
- **When mounting the cover, make the finisher's cable come out from the cover at the position shown in the illustration.**

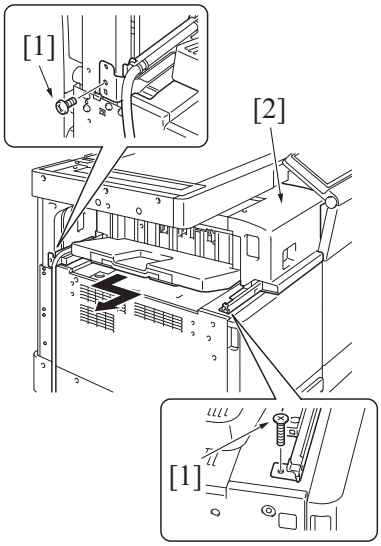

6. Remove two screws [1], and remove the finisher [2] from the main body.

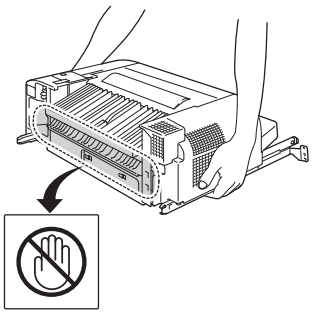

NOTE
- **When carrying the finisher, be sure to hold the finisher by the sides as shown in the illustration.**

7. Reinstall the above parts following the removal steps in reverse.

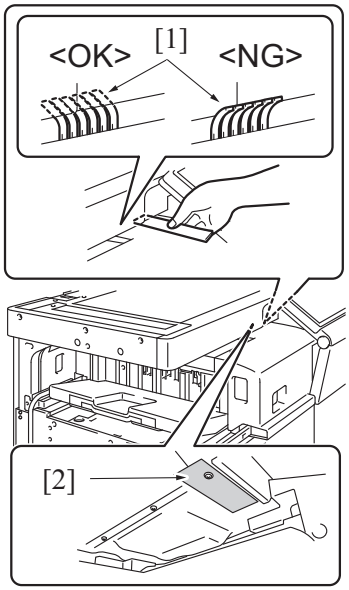

NOTE
- **After mounting the finisher to the main body, press the antistatic brush [1] toward the rear using a rule or the like.**
- **Make sure that brush [1] touches the aluminum sheet [2] affixed to the bottom of the scanner unit.**

6.12.5 Stapler unit (FS-533)

1. Remove the front cover.
G.6.12.1 Front cover (FS-533)

2. Disconnect two connectors [1].

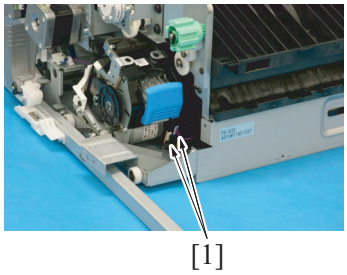

3. Remove two screws [1], and remove the cover [2].
4. Remove the screw [3], and remove the stapler unit assy [4].

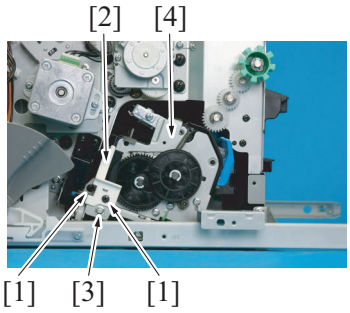

5. Remove two screws [1], and remove the stapler unit [2].
NOTE
- **When replacing the stapler unit, attach the guide [3] (Parts No.: A2YU PPE9 ##) to the stapler unit.**

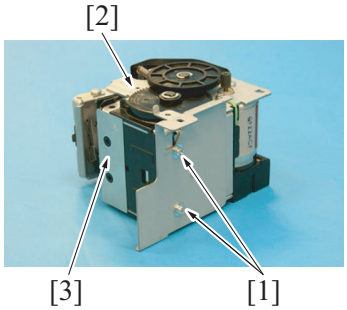

6. Reinstall the above parts following the removal steps in reverse.

6.12.6 Paper exit tray unit (FS-533)

1. Remove five screws [1], and remove the paper exit tray unit [2].

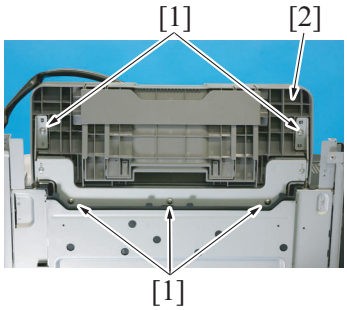

2. Reinstall the above parts following the removal steps in reverse.

6.12.7 FS control board (FSCB) (FS-533)

1. Remove the rear cover.
G.6.12.3 Rear cover (FS-533)

2. Remove all connectors from the FS control board.
3. Remove the screw [1], and remove the FS control board [2].

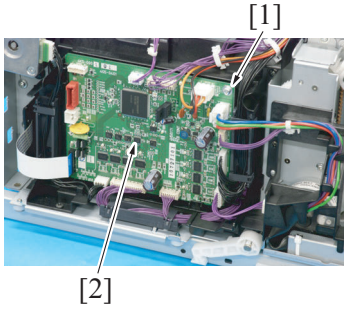

4. Reinstall the above parts following the removal steps in reverse.

6.12.8 Stapler relay board (STREYB) (FS-533)

1. Remove the front cover.
   G.6.12.1 Front cover (FS-533)
2. Remove the stapler unit.
   G.6.12.5 Stapler unit (FS-533)

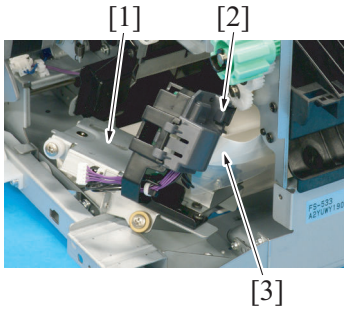

3. Pull out the stapler drive assy [1].
4. Release the lock [2] of the board cover, and remove the flat cable [3].

5. Unhook the tab [1], and remove the board cover [2].

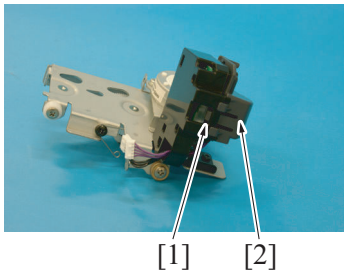

6. Unhook two tabs [1], and remove the stapler relay board [2].
7. Disconnect two connectors [3].

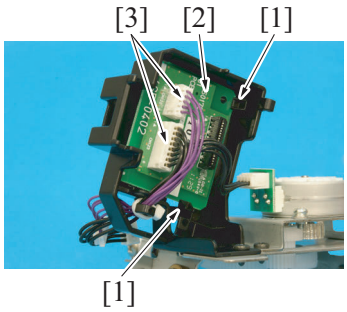

8. Reinstall the above parts following the removal steps in reverse.

6.12.9 Paper conveyance motor (M101) (FS-533)

1. Remove the rear cover.
   G.6.12.3 Rear cover (FS-533)

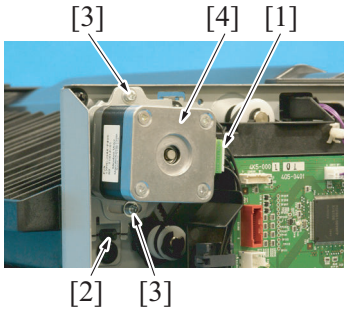

2. Disconnect the connector [1].
3. Remove the spring [2].
4. Remove two screws [3], and remove the paper conveyance motor assy [4].

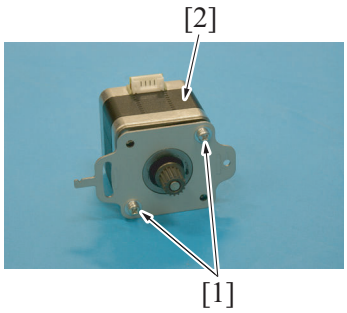

5. Remove two screws [1], and remove the paper conveyance motor [2].

6. Reinstall the above parts following the removal steps in reverse.

6.12.10 Paper exit motor (M102) (FS-533)

1. Remove the front cover.
G.6.12.1 Front cover (FS-533)

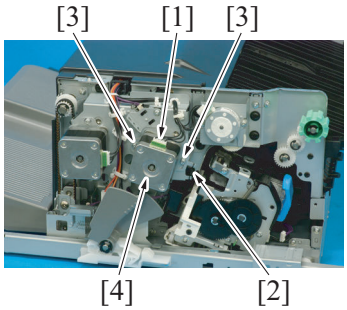

2. Disconnect the connector [1].
3. Remove the spring [2].
4. Remove two screws [3], and remove the paper exit motor assy [4].

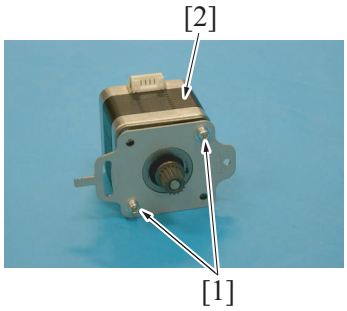

5. Remove two screws [1], and remove the paper exit motor [2].

6. Reinstall the above parts following the removal steps in reverse.

6.12.11 Alignment roller motor (M103) (FS-533)

1. Remove the front cover.
G.6.12.1 Front cover (FS-533)

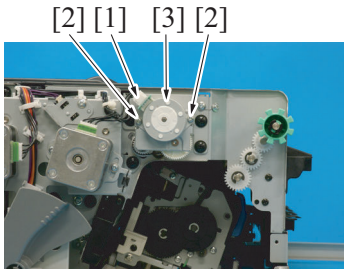

2. Disconnect the connector [1].
3. Remove two screws [2], and remove the alignment roller motor [3].

4. Reinstall the above parts following the removal steps in reverse.

6.12.12 Exit roller lift up motor (M104) (FS-533)

1. Remove the front cover.
G.6.12.1 Front cover (FS-533)

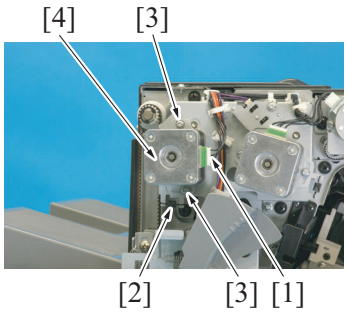

2. Disconnect the connector [1].
3. Remove the spring [2].
4. Remove two screws [3], and remove the exit roller lift up motor assy [4].

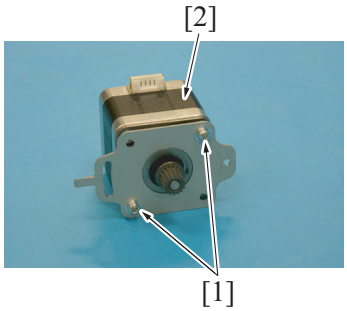

5. Remove two screws [1], and remove the exit roller lift up motor [2].

6. Reinstall the above parts following the removal steps in reverse.

6.12.13 Alignment motor/F (M105), Alignment motor/R (M106) (FS-533)

1. Remove the paper exit tray unit.
G.6.12.6 Paper exit tray unit (FS-533)

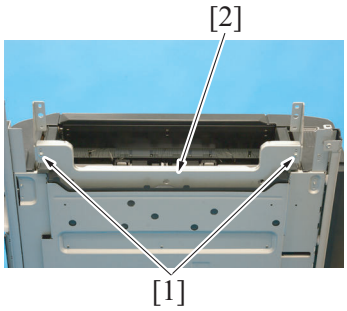

2. Remove two screws [1], and remove the plate [2].

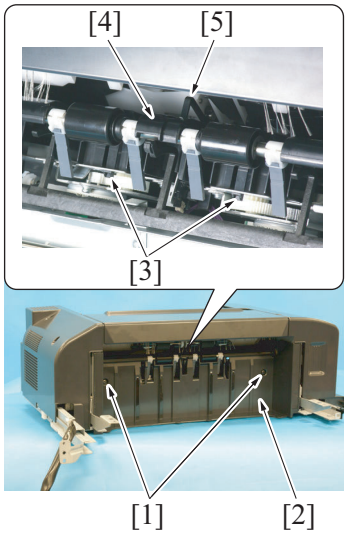

3. Remove two screws [1], and remove the cover [2].
NOTE
- **When removing the cover [2], two claws [3] may come off and the alignment tray [4] may come up. This may cause the alignment tray to contact the actuator [5] and cause malfunction of the actuator.**
- **When mounting the cover [2], make sure two claws [3] are attached to the plate.**

4. Remove two screws [1], and pull out the paper surface detect solenoid assy [2].

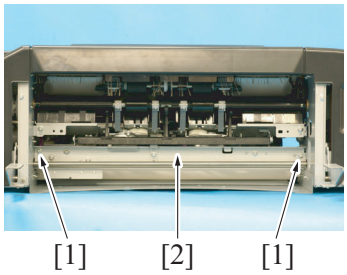

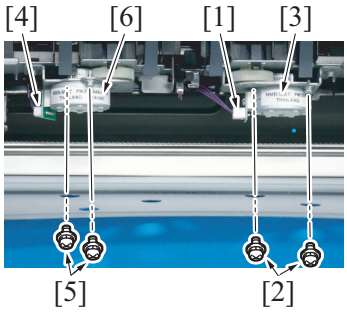

5. Disconnect the connector [1], remove two screws [2], and remove the alignment motor/F [3].
6. Disconnect the connector [4], remove two screws [5], and remove the alignment motor/R [6].

7. Reinstall the above parts following the removal steps in reverse.

6.12.14 Stapler movement motor (M107) (FS-533)

1. Remove the front cover.
   G.6.12.1 Front cover (FS-533)
2. Remove the stapler unit.
   G.6.12.5 Stapler unit (FS-533)

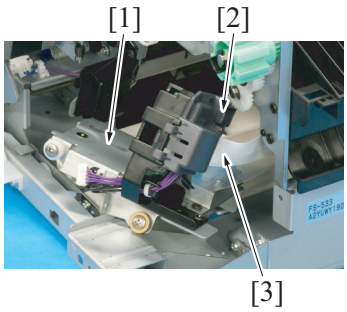

3. Pull out the stapler drive assy [1].
4. Release the lock [2] of the board cover, and remove the flat cable [3].

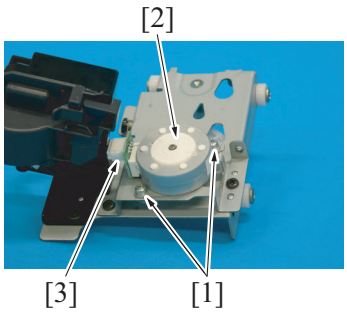

5. Remove two screws [1], and remove the stapler movement motor [2].
6. Disconnect the connector [3].

7. Reinstall the above parts following the removal steps in reverse.

6.12.15 Tray lift up motor (M109) (FS-533)

1. Remove the rear cover.
   G.6.12.3 Rear cover (FS-533)

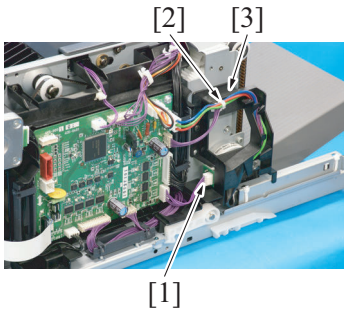

2. Disconnect the connector [1].
3. Remove the harness tie [2] and harness from the harness guide [3].

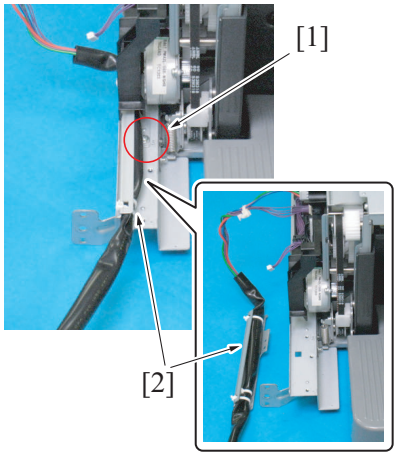

4. Remove the screw [1], and remove the finisher's cable [2].

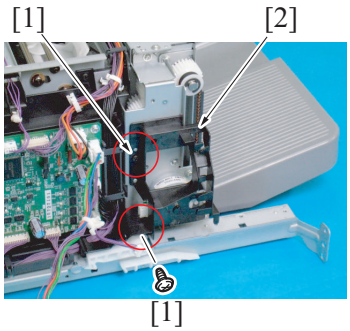

5. Remove two screws [1], and remove the harness guide [2].

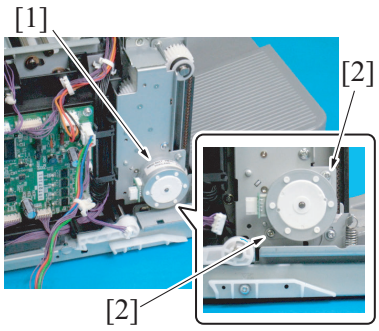

6. Remove two screws [2], and remove the tray lift up motor [1].

7. Reinstall the above parts following the removal steps in reverse.

6.12.16 Paper surface detect solenoid (SD101) (FS-533)

1. Remove the paper exit tray unit.
G.6.12.6 Paper exit tray unit (FS-533)

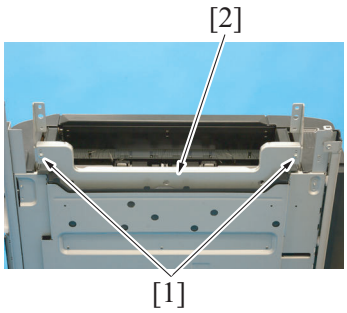

2. Remove two screws [1], and remove the plate [2].

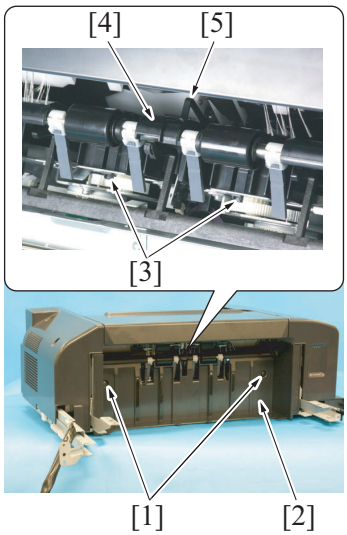

3. Remove two screws [1], and remove the cover [2].
NOTE
- **When removing the cover [2], two claws [3] may come off and the alignment tray [4] may come up. This may cause the alignment tray to contact the actuator [5] and cause malfunction of the actuator.**
- **When mounting the cover [2], make sure two claws [3] are attached to the plate.**

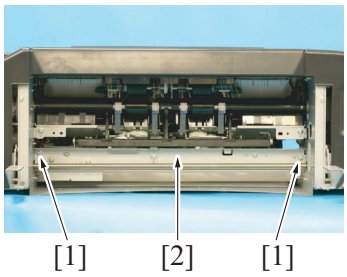

4. Remove two screws [1], and pull out the paper surface detect solenoid assy [2].

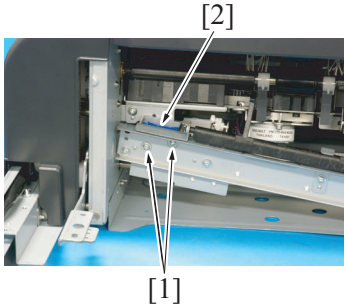

5. Remove two screws [1], and pull out the paper surface detect solenoid [2].

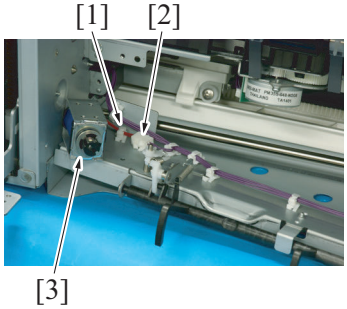

6. Remove the harness from wire saddle [1], and disconnect the connector [2] and remove the paper surface detect solenoid [3].

7. Reinstall the above parts following the removal steps in reverse.

6.12.17 Batch solenoid (SD102) (FS-533)

1. Remove the rear cover.
   G.6.12.3 Rear cover (FS-533)
2. Remove the FS control board.
   G.6.12.7 FS control board (FSCB) (FS-533)
3. Remove the spring [1].

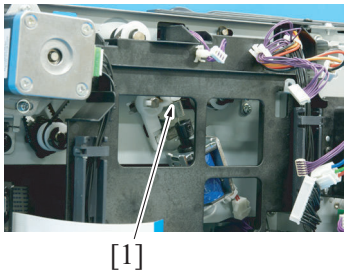

4. Remove the harness from the wire saddle [1].
5. Disconnect the connector [2].
6. Remove the screw [3], and remove the batch solenoid assy [4].

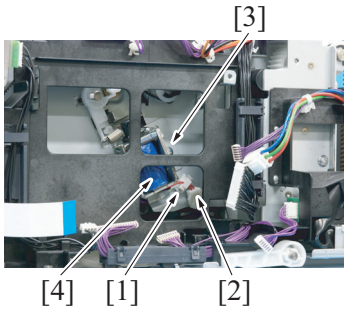

7. Remove the screw [1], and remove the batch solenoid [2].

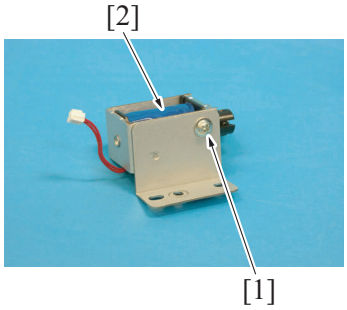

8. Reinstall the above parts following the removal steps in reverse.

6.12.18 Paper exit roller solenoid (SD103) (FS-533)

1. Remove the front cover.
   G.6.12.1 Front cover (FS-533)
2. Remove the spring [1].

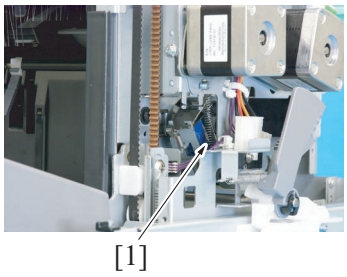

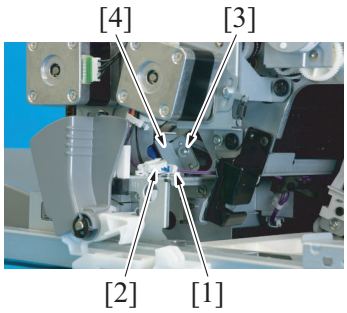

3. Remove the harness from the wire saddle [1].
4. Disconnect the connector [2].
5. Remove the screw [3], and remove the paper exit roller solenoid assy [4].

6. Reinstall the above parts following the removal steps in reverse.

6.12.19 Paper exit paddle (FS-533)

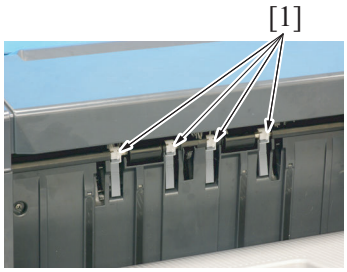

1. Pull the knobs [1] to remove the exit paddle.

2. Reinstall the above parts following the removal steps in reverse.

6.13 Disassembly/reassembly procedure (PK-519)

6.13.1 Punch kit (PK-519)

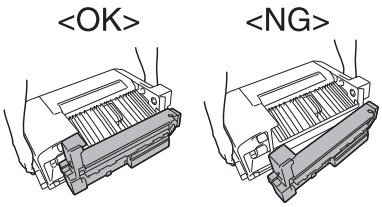

1. Remove the finisher.
   G.6.12.4 Finisher (FS-533)
   NOTE
   - **Make sure that the punch unit is locked to the finisher before removing it.**

2. Remove the rear cover.
   G.6.12.3 Rear cover (FS-533)

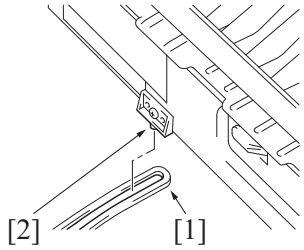

3. Open the punch unit.
4. Remove the stopper arm [1] from the stopper pin [2].

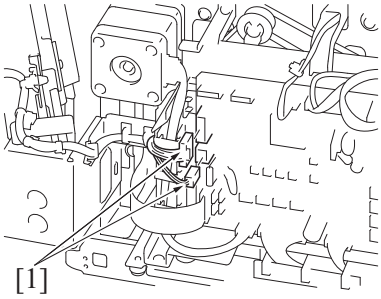

5. Disconnect two connectors [1].

6. Remove the screw [1], and remove the punch unit [2].

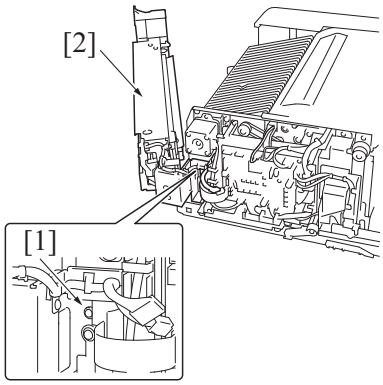

7. Reinstall the above parts following the removal steps in reverse.

6.13.2 PK control board (PKCB) (PK-519)

1. Remove the finisher.
G.6.12.4 Finisher (FS-533)

2. Remove the screw [1], and remove the plate [2].

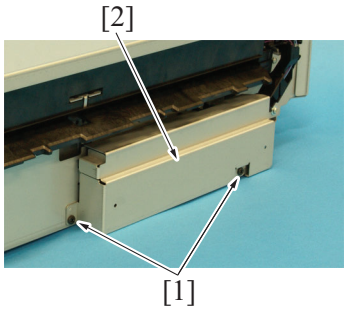

3. Disconnect two connectors [1].
4. Remove the screw [2], and pull out the PK control board [3].
5. Disconnect two connectors [4], and remove the PK control board [3].

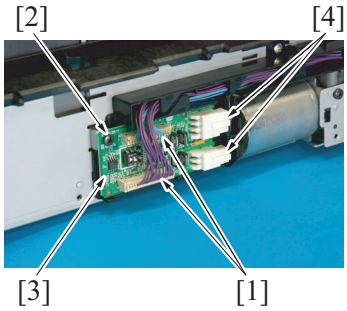

6. Reinstall the above parts following the removal steps in reverse.

6.13.3 Punch motor (M201) (PK-519)

1. Remove the finisher.
G.6.12.4 Finisher (FS-533)

2. Remove the screw [1], and remove the plate [2].

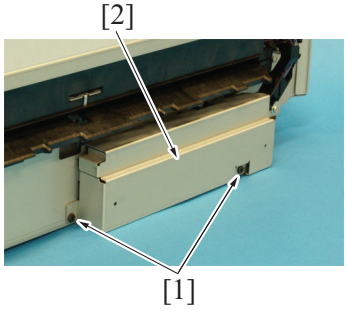

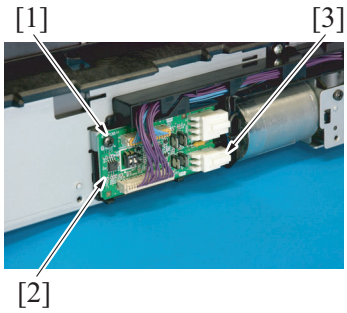

3. Remove the screw [1], and pull out the PK control board [2].
4. Disconnect the connector [3].

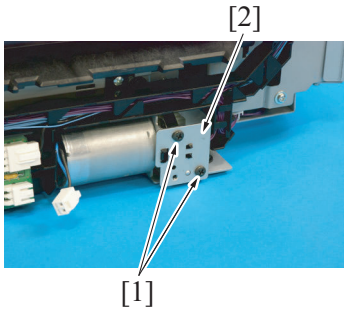

5. Remove two screws [1], and remove the plate [2].

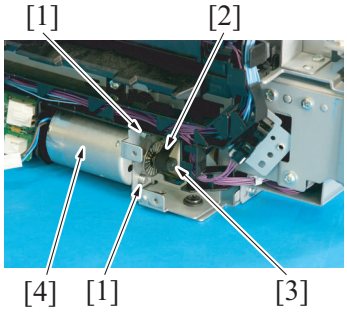

6. Remove two screws [1], and remove the drive belt [2] from the gear [3].
7. Remove the punch motor [4].

8. Reinstall the above parts following the removal steps in reverse.

6.14 Disassembly/reassembly procedure (FK-508)

6.14.1 FAX board (line 3), FAX board (line 4) (FK-508)

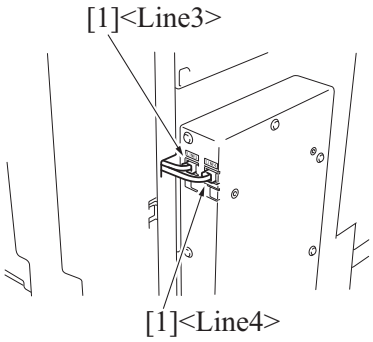

1. Disconnect the modular cable [1].

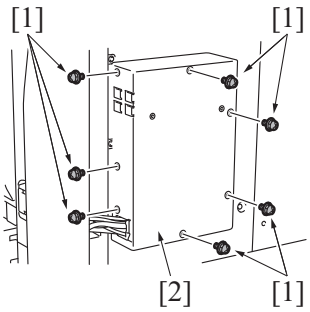

2. Remove seven screws [1], and remove the cover [2].

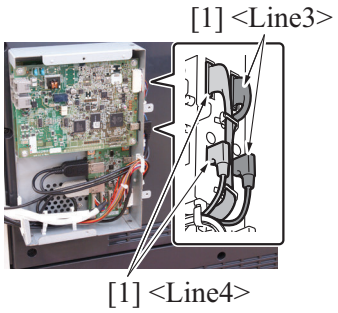

3. Disconnect four connectors [1].
NOTE
- **If the FAX board of Line 4 only is to be removed, there is no need to disconnect the Line 3 connector.**

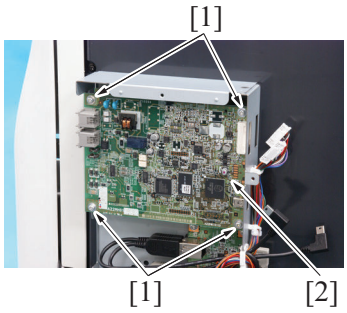

4. Remove four screws [1], and remove the FAX board (Line4) [2].

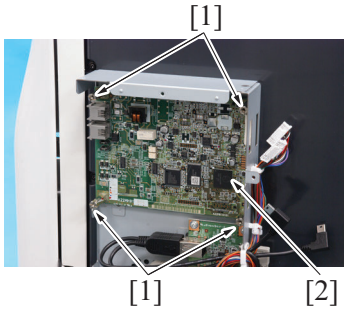

5. Remove four screws [1], and remove the FAX board (Line3) [2].

6. To reinstall, reverse the order of removal.

6.15 Disassembly/reassembly procedure (FK-511)

6.15.1 FAX Kit (Line1), FAX Kit (Line2) (FK-511)

NOTE
- **Following describe the procedure to be followed when removing the FAX Kit (Line 1) and FAX Kit (Line 2) at the same time. When removing the FAX Kit, make sure of the correct line associated with the FAX Kit to be removed before removing the line.**

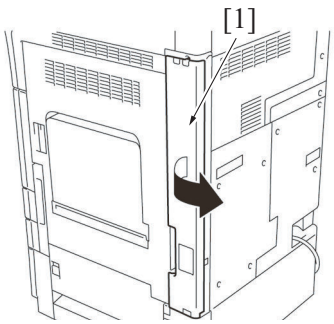

1. Open the cover [1].

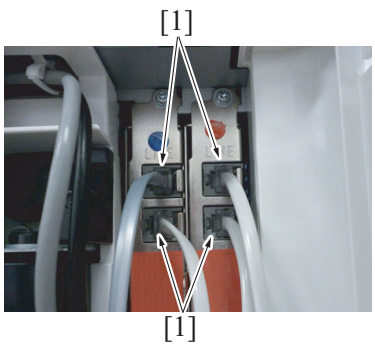

2. Disconnect the modular cable [1].

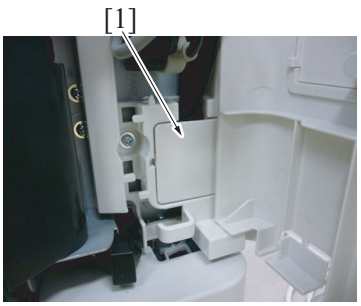

3. Remove the cover [1].

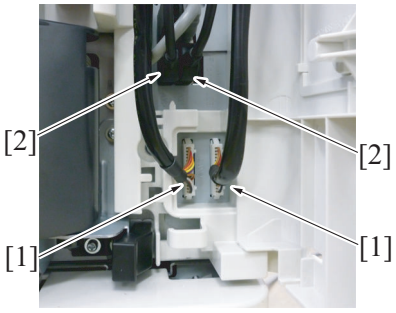

4. Disconnect two connectors [1] and two USB cables [2].
5. Remove the harness guide from the USB cable [1] and harness [2].



6. Remove four screws [1], and remove the FAX Kit [2].

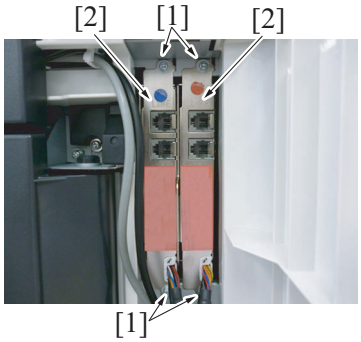

7. To reinstall, reverse the order of removal.

6.15.2 FAX Kit (Line1), FAX Kit (Line2) (FK-511) (with MK-728)

NOTE

- **Following describe the procedure to be followed when removing the FAX Kit (Line 1) and FAX Kit (Line 2) at the same time. When removing the FAX Kit, make sure of the correct line associated with the FAX Kit to be removed before removing the line.**

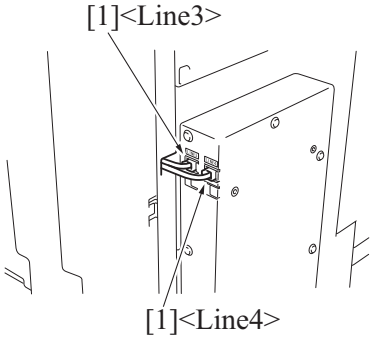

1. Disconnect the modular cable [1].

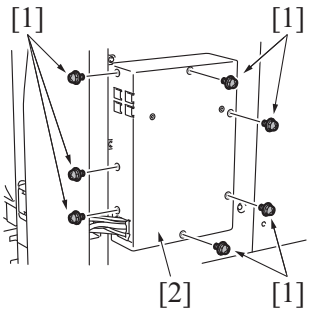

2. Remove seven screws [1], and remove the cover [2].

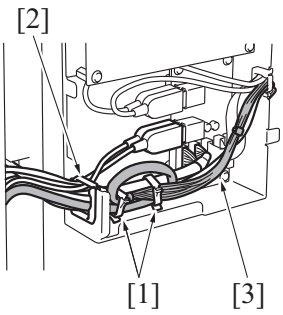

3. Remove the USB cable and harness from two wire saddles [1] and the wire saddle [2].

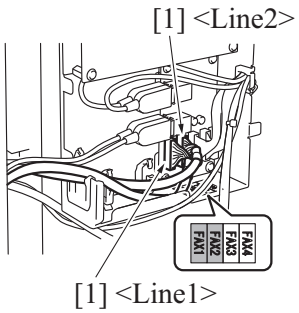

4. Disconnect the connector [1].

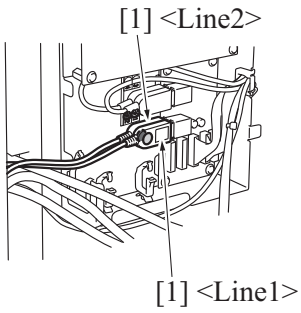

5. Disconnect the USB cable [1].
6. Remove the USB cable and harness of the Line 1 [1] and the Line 2 [2] from the harness guide.

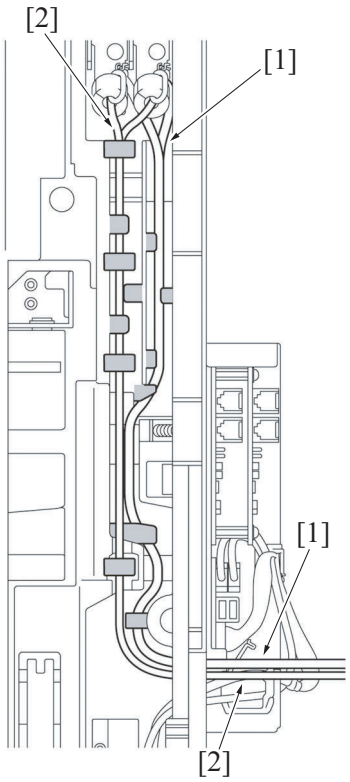

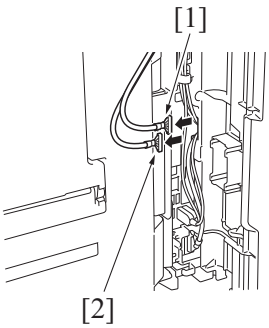

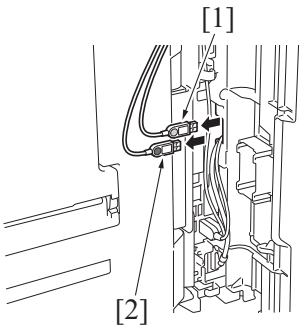

7. Remove the harness (Line 1) [1] and the harness (Line 2) [2] them from the cutout in the cover.
8. Remove the USB cable (Line 1) [1] and the USB cable (Line 2) [2] them from the cutout in the cover.

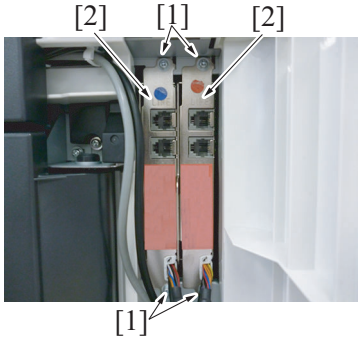

9. Remove four screws [1], and remove the FAX Kit [2].

10. To reinstall, reverse the order of removal.

7. COMMERCIALLY AVAILABLE PARTS

7.1 Installing the key counter

7.1.1 Configuration

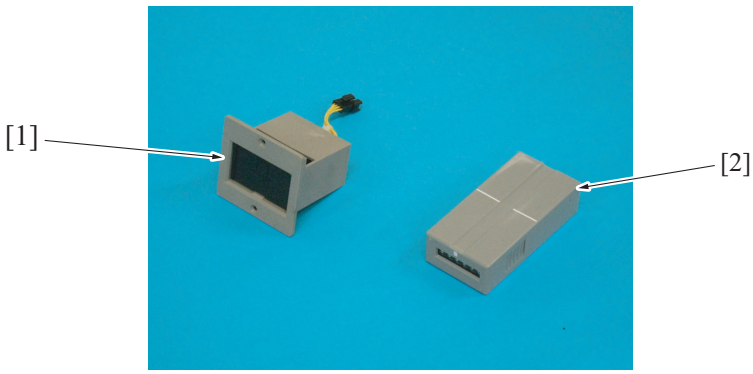

[1]	Key counter socket	[2]	Key counter

7.1.2 Procedure

NOTE

- **When mounting the key counter, the optional key counter kit KIT-1 (4623-474) or key counter kit KIT-CF (4623-484; only for Europe and Japan) is necessary.**
- **Procedure for directly mounting the key counter to the main unit is described below.**
  For mounting the key counter to the optional working table WT-506, refer to WT-506 installation manual.

(1) Key counter kit KIT-1 (4623-474)

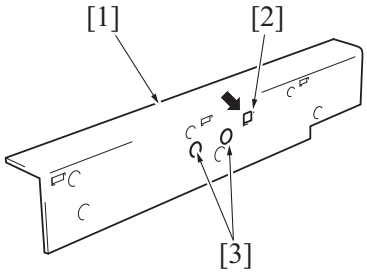

1. Remove the scanner right cover [1].
   G.5.2.2 Scanner right cover
2. Cut out the knockouts [2] of the scanner right cover.
3. Remove two caps [3].

4. Remove the upper right cover.
   G.5.2.19 Upper right cover

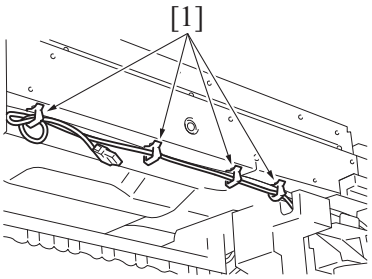

5. Remove the harness for the key counter from four wire saddles [1].

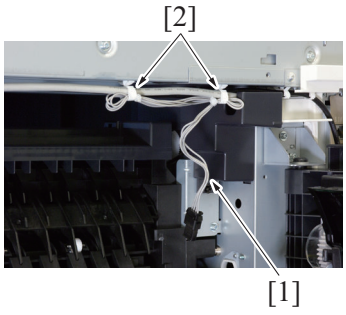

6. Route the harness [1] through two wire saddles [2] as shown in the illustration.

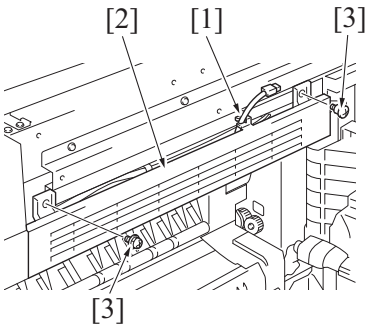

7. Route the harness through the hook [1] located at the middle of the upper right cover, and reinstall the upper right cover [2] using two screws [3].

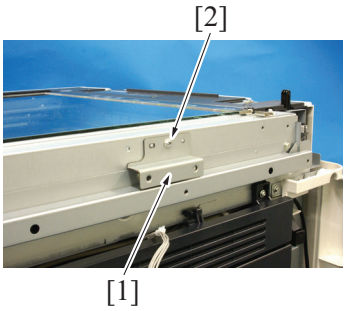

8. Prepare one screw (M3 x 6).
9. Install the mounting plate (4623 1670 ##) [1] included in the key counter kit with the prepared screw [2].

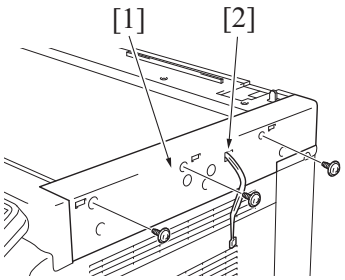

10. Mount the scanner right cover [1], and insert the harness for the key counter through the hole [2] knockouts were removed from.

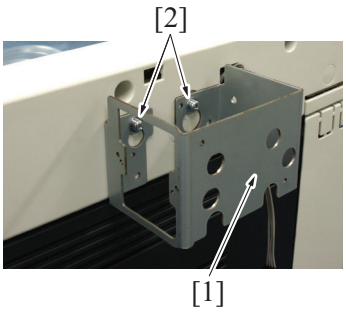

11. Using two screws [2], secure the counter mounting bracket [1].
NOTE
- **Secure the counter mounting bracket passing the connector into the bracket.**
- **Use the two long screws (V116 0418 14: M4 x 18) in the key counter kit to secure the counter mounting bracket.**

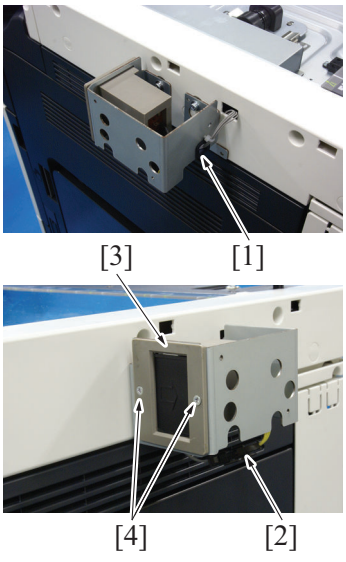

12. Mount the edge cover [1] to the counter mounting bracket and set the harness to the edge cover.
13. Connect the key counter socket connector [2].
14. Using two screws [4], secure the counter socket [3].

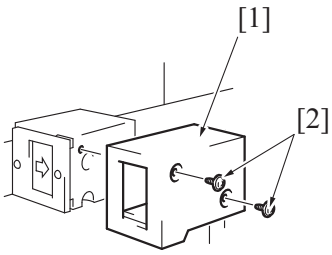

15. Using two screws [2], secure the key counter cover [1].

16. Select [Service Mode] -> [Billing Setting] -> [Management Function Choice] -> [Key Counter Only] or [Vendor 2] (Use the key counter and the vendor 2 together). Then, set the relative items.
For details on setting, see "I.13.3.2 Management Function Choice"

(2) Key counter kit KIT-CF (4623-484)

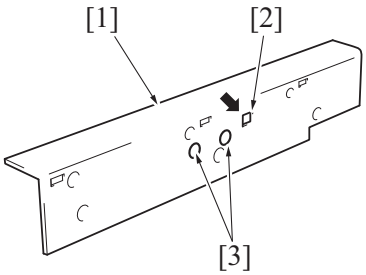

1. Remove the scanner right cover [1].
G.5.2.2 Scanner right cover
2. Cut out the knockouts [2] of the scanner right cover.
3. Remove two caps [3].
4. Remove the upper right cover.
G.5.2.19 Upper right cover

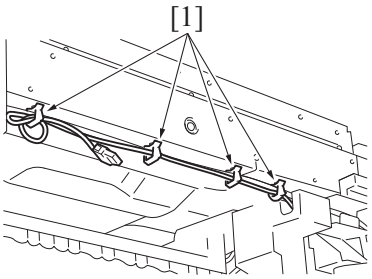

5. Remove the harness for the key counter from four wire saddles [1].

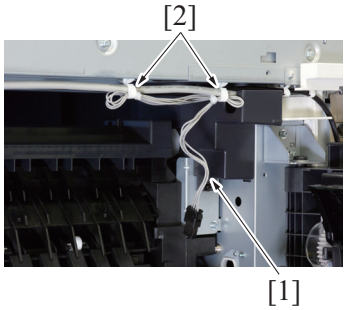

6. Route the harness [1] through two wire saddles [2] as shown in the illustration.

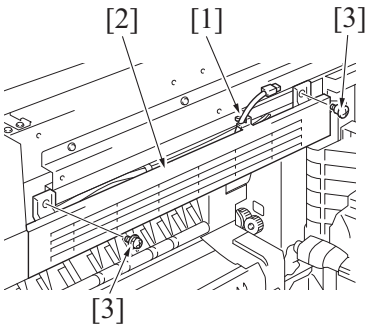

7. Route the harness through the hook [1] located at the middle of the upper right cover, and reinstall the upper right cover [2] using two screws [3].

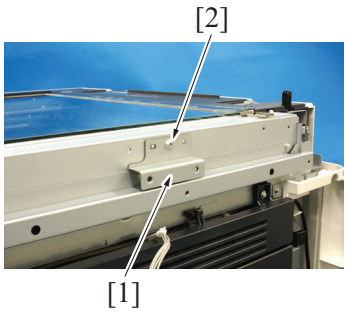

8. Prepare one screw (M3 x 6).
9. Install the mounting plate (4623 1670 ##) [1] included in the key counter kit with the prepared screw [2].

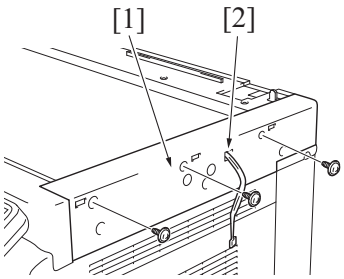

10. Mount the scanner right cover [1], and insert the harness for the key counter through the hole [2] knockouts were removed from.

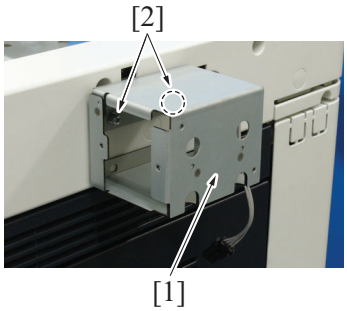

11. Using two screws [2], secure the counter mounting bracket [1].
NOTE
- **Secure the counter mounting bracket passing the connector into the bracket.**
- **Use the two long screws (V116 0418 14: M4 x 18) in the key counter kit to secure the counter mounting bracket.**

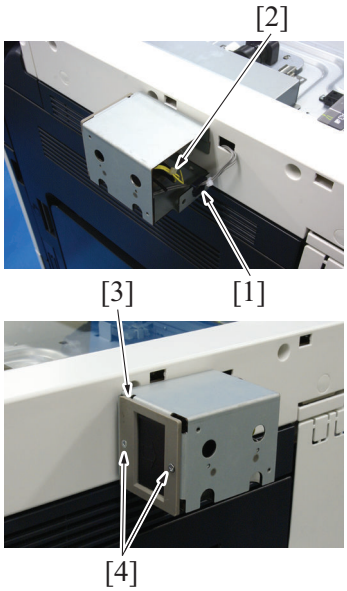

12. Mount the edge cover [1] to the counter mounting bracket and set the harness to the edge cover.
13. Connect the key counter socket connector [2].
14. Using two screws [4], secure the counter socket [3].

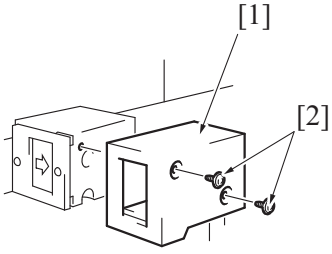

15. Using two screws [2], secure the key counter cover [1].

16. Select [Service Mode] -> [Billing Setting] -> [Management Function Choice] -> [Key Counter Only] or [Vendor 2] (Use the key counter and the vendor 2 together). Then, set the relative items.
For details on setting, see "I.13.3.2 Management Function Choice".

7.2 Installing the original size detection sensor/2 (PS205)

7.2.1 Procedure

1. Remove the original glass.
G.5.2.12 Original glass

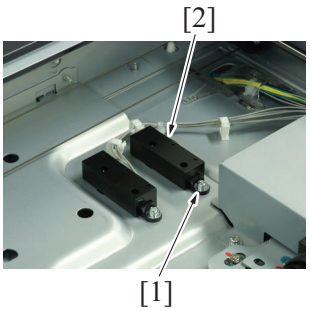

2. Using the screw [1], mount the original size detection sensor/2 (PS205) [2] and fix it.

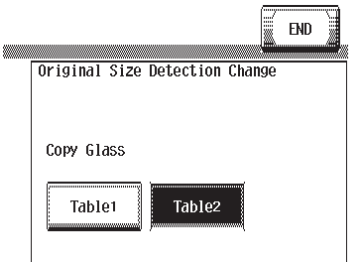

3. Select [Service Mode] -> [System 1] -> [Original Size Detection], and set the original glass to [Table2].

4. Select [Service Mode] -> [State Confirmation] -> [Sensor Check].

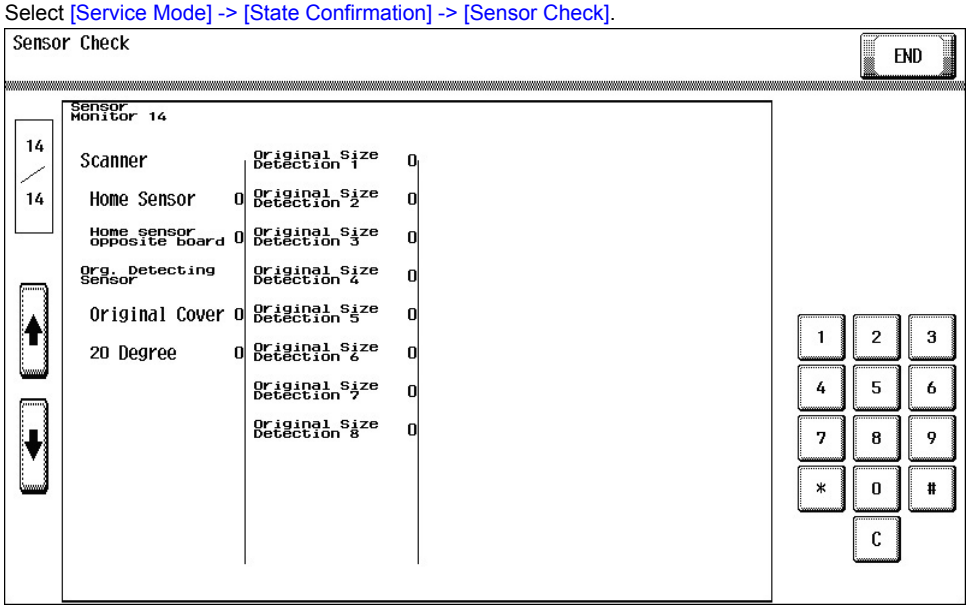

5. Set the original on the original glass, and check that the data for "Original Size Detection" changes from "0" to "1" on the screen.

H CLEANING/LUBRICATION

1. bizhub 364e/284e/224e

1.1 Cleaning parts list

No.	Section	Part name	Ref. page
1	Processing section	Transfer belt unit	H.1.3.1 Transfer belt unit
2		PH window	H.1.3.2 PH window
3	Tray 1	Tray 1 feed roller	H.1.3.3 Tray 1 feed roller, tray 1 pick-up roller, tray 1 separation roller
4		Tray 1 pick-up roller	
5		Tray 1 separation roller	
6	Tray 2	Tray 2 feed roller	H.1.3.4 Tray 2 feed roller, tray 2 pick-up roller, tray 2 separation roller
7		Tray 2 pick-up roller	
8		Tray 2 separation roller	
9		Tray 2 transport roller	H.1.3.5 Tray 2 transport roller
10	Manual bypass tray	Manual bypass tray feed roller	H.1.3.6 Manual bypass tray feed roller
11		Manual bypass tray separation roller	H.1.3.7 Manual bypass tray separation roller
12	Scanner section	Original glass	H.1.3.8 Original glass
13		Scanner rails	H.1.3.9 Scanner rails
14		Mirrors	H.1.3.10 Mirrors
15		Lens	H.1.3.11 Lens
16		CCD sensor	H.1.3.12 CCD sensor

1.2 Lubrication parts list

NOTE

- **With this machine, the lubrication is not necessary.**

1.3 Cleaning procedure

NOTE

- **The alcohol described in the cleaning procedure represents the ethanol isopropyl alcohol.**

1.3.1 Transfer belt unit

1. Remove the transfer belt unit.
   F.6.6.3 Replacing the transfer belt unit

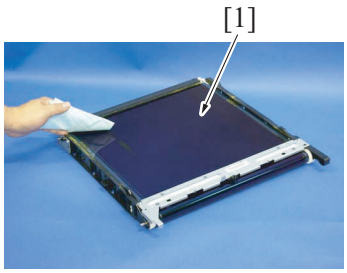

2. Using a hydro-wipe (65AA-99##), wipe the transfer belt [1].
   NOTE
   - **Do not wipe out with water.**
   - **Do not wipe out with any solvents.**

1.3.2 PH window

1. Open the front door.
2. Remove the waste toner box.
   F.6.8.1 Replacing the waste toner box

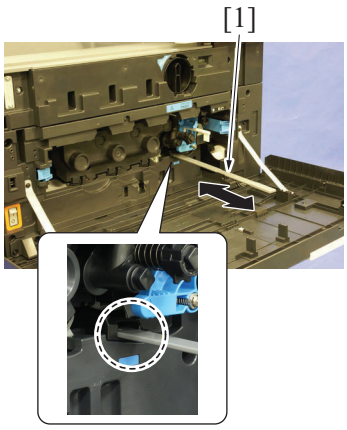

3. Clean the PH window by putting the PH window cleaning jig [1] back and forth a couple times.

1.3.3 Tray 1 feed roller, tray 1 pick-up roller, tray 1 separation roller

1. Remove the tray 1.
   G.5.2.23 Tray 1
2. Remove the tray 2.
   G.5.2.24 Tray 2

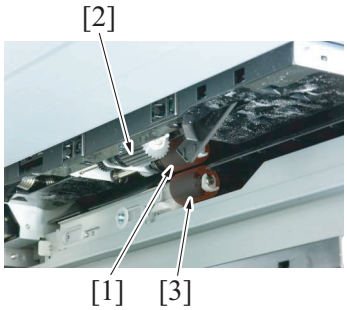

3. Using a cleaning pad dampened with alcohol, wipe the tray 1 feed roller [1], tray 1 pick-up roller [2], tray 1 separation roller [3] clean of dirt.

1.3.4 Tray 2 feed roller, tray 2 pick-up roller, tray 2 separation roller

1. Remove the tray 1.
   G.5.2.23 Tray 1
2. Remove the tray 2.
   G.5.2.24 Tray 2

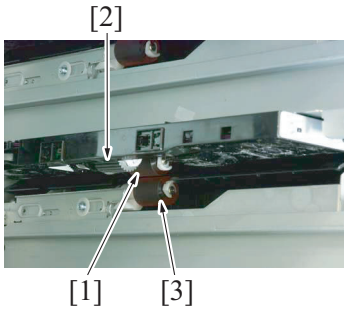

3. Using a cleaning pad dampened with alcohol, wipe the tray 2 feed roller [1], tray 2 pick-up roller [2], tray 2 separation roller [3] clean of dirt.

1.3.5 Tray 2 transport roller

1. Open the right door.

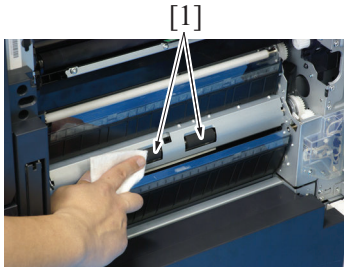

2. Using a cleaning pad dampened with alcohol, wipe the tray 2 transport rollers [1] clean of dirt.

1.3.6 Manual bypass tray feed roller

1. Open the right door.

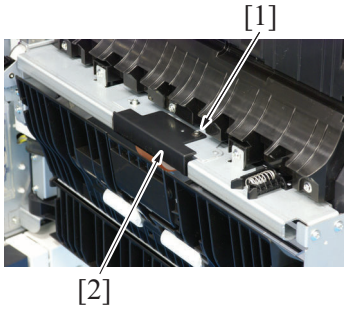

2. Remove the screw [1], and remove the feed roller cover [2].

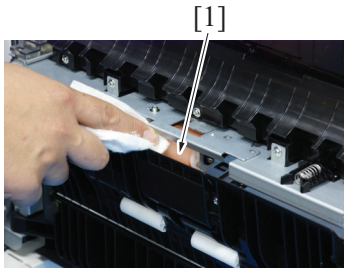

3. Using a cleaning pad dampened with alcohol, wipe the manual bypass tray feed roller [1] clean of dirt.

1.3.7 Manual bypass tray separation roller

1. Remove the manual bypass tray separation roller unit.
F.6.9.3 Replacing the manual bypass tray feed roller, manual bypass tray separation roller assy

2. Using a cleaning pad dampened with alcohol, wipe the manual bypass tray separation roller [1] clean of dirt.

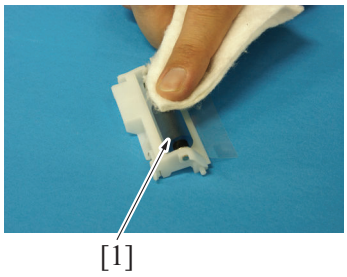

1.3.8 Original glass

1. Using a cleaning pad dampened with alcohol, wipe the original glass [1] clean of dirt.

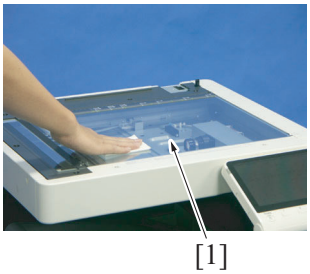

2. Using a cleaning pad dampened with alcohol, wipe the slit glass [1] clean of dirt.

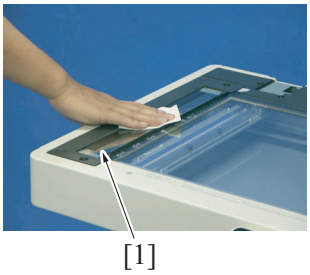

1.3.9 Scanner rails

1. Remove the original glass.
G.5.2.12 Original glass

2. Using a cleaning pad dampened with alcohol, wipe the scanner rails [1] clean of dirt.
NOTE
- **Apply lubricant after cleaning.**

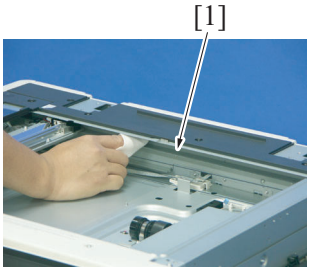

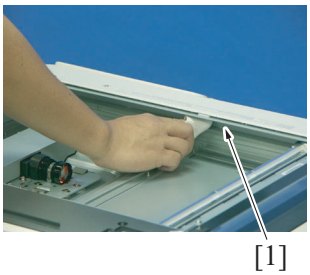

1.3.10 Mirrors

1. Remove the original glass.
G.5.2.12 Original glass

2. Using a cleaning pad dampened with alcohol, wipe the mirrors [1].

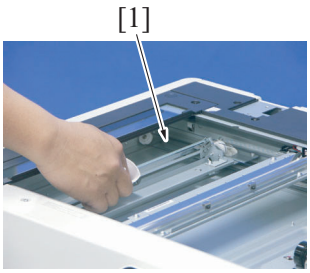

1.3.11 Lens

1. Remove the original glass.
G.5.2.12 Original glass

2. Using a cleaning pad dampened with alcohol, wipe the lens [1] clean of dirt.

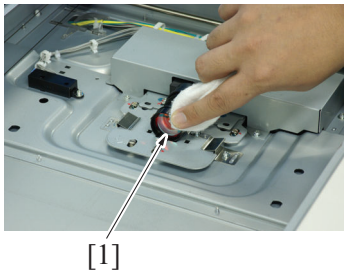

1.3.12 CCD sensor

1. Remove the original glass.
G.5.2.12 Original glass

2. Remove five screws [1], and remove the CCD board protective shield [2].

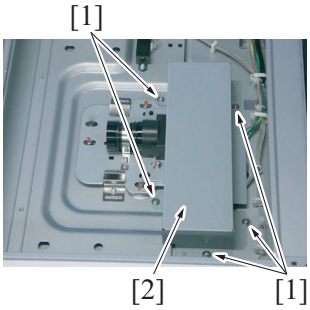

3. Unhook four tabs [1], and remove the CCD sensor cover [2].

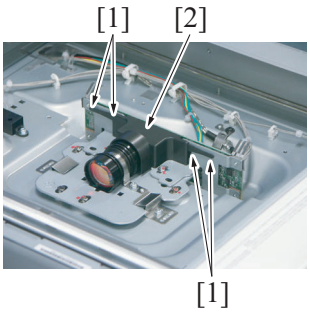

4. Using a cleaning pad dampened with alcohol, wipe the CCD sensor [1] clean of dirt.

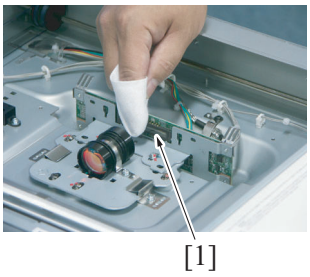

2. Option

2.1 Cleaning parts list

2.1.1 DF-701

No.	Section	Part name	Ref. page
1	Scanning section	Back side scanning glass	H.2.2.1 Back side scanning glass
		Back side scanning guide	H.2.2.2 Back side scanning guide/Back side scanning shading shaft
		Back side scanning shading shaft	

2.1.2 PC-110/PC-210

No.	Section	Part name	Ref. page
1	Feed section	Tray 3 feed roller	H.2.3.1 Tray 3 feed roller, tray 3 pick-up roller, tray 3 separation roller
2		Tray 3 pick-up roller	
3		Tray 3 separation roller	
4		Tray 4 feed roller	H.2.3.2 Tray 4 feed roller, tray 4 pick-up roller, tray 4 separation roller
5		Tray 4 pick-up roller	
6		Tray 4 separation roller	
7	Transport section	Tray 3 vertical transport roller	H.2.3.3 Tray 3 vertical transport roller, tray 4 vertical transport roller
8		Tray 4 vertical transport roller	

2.1.3 PC-410

No.	Section	Part name	Ref. page
1	Feed section	Feed roller	H.2.4.1 Feed roller, Pick-up roller, Separation roller
2		Pick-up roller	
3		Separation roller	
4	Transport section	Vertical transport roller	H.2.4.2 Vertical transport roller

2.2 Cleaning procedure (DF-701)

2.2.1 Back side scanning glass

1. Open the dual scan document feeder.

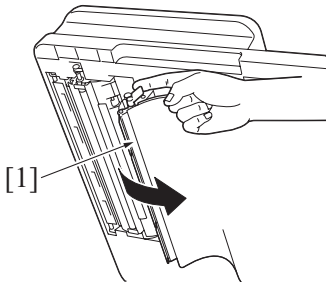

2. Open the opening and closing guide [1].

3. Using a cleaning pad, wipe the back side scanning glass [1].

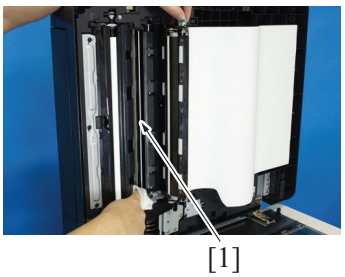

2.2.2 Back side scanning guide/Back side scanning shading shaft

1. Open the dual scan document feeder.

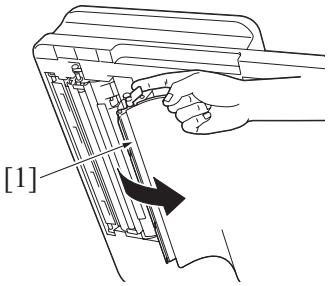

2. Open the opening and closing guide [1].

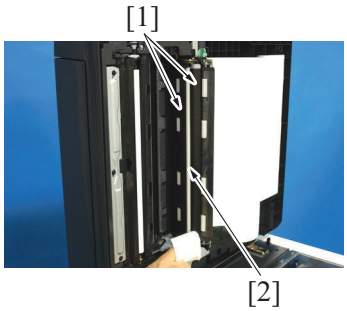

3. Using a cleaning pad with alcohol, wipe the back side scanning guide [1] and back side scanning shading shaft [2] clean of dirt.

2.3 Cleaning procedure (PC-110/PC-210)

NOTE

- **The alcohol described in the cleaning procedure of maintenance represents the isopropyl alcohol.**

2.3.1 Tray 3 feed roller, tray 3 pick-up roller, tray 3 separation roller

1. Remove the tray 3.
   G.6.6.4 Tray 3, tray 4, storage box (PC-110/PC-210)
2. Remove the tray 4 or storage box.
   G.6.6.4 Tray 3, tray 4, storage box (PC-110/PC-210)

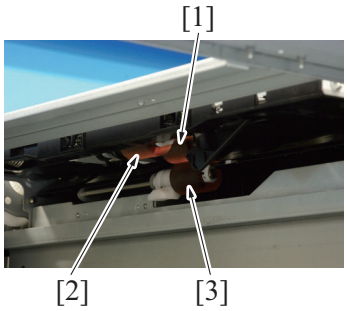

3. Using a cleaning pad dampened with alcohol, wipe the tray 3 feed roller [1], tray 3 pick-up roller [2], tray 3 separation roller [3] clean of dirt.

2.3.2 Tray 4 feed roller, tray 4 pick-up roller, tray 4 separation roller

1. Remove the tray 3 and tray 4.
   G.6.6.4 Tray 3, tray 4, storage box (PC-110/PC-210)

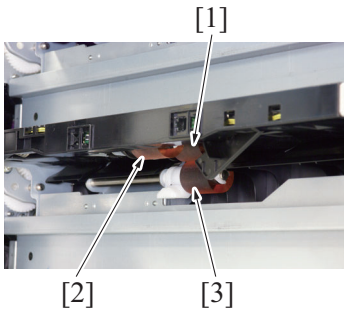

2. Using a cleaning pad dampened with alcohol, wipe the tray 4 feed roller [1], tray 4 pick-up roller [2], tray 4 separation roller [3] clean of dirt.

2.3.3 Tray 3 vertical transport roller, tray 4 vertical transport roller

1. Open the right door.

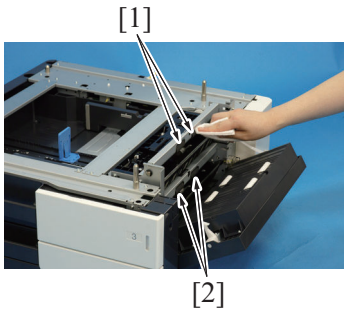

2. Using a cleaning pad dampened with alcohol, wipe the tray 3 vertical transport roller [1], tray 4 vertical transport roller [2] clean of dirt.

2.4 Cleaning procedure (PC-410)

NOTE

- **The alcohol described in the cleaning procedure of maintenance represents the isopropyl alcohol.**

2.4.1 Feed roller, Pick-up roller, Separation roller

1. Slide out the tray.
2. Open the right door.

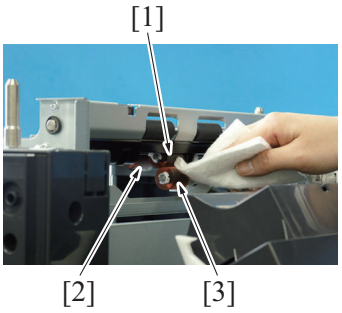

3. Using a cleaning pad dampened with alcohol, wipe the feed roller [1], pick-up roller [2], separation roller [3] clean of dirt.

2.4.2 Vertical transport roller

1. Open the right door.

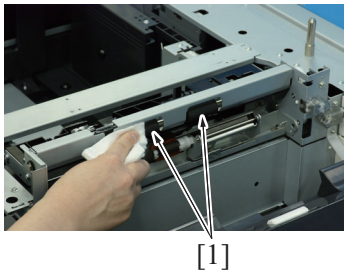

2. Using a cleaning pad dampened with alcohol, wipe the vertical transport roller [1] clean of dirt.

I ADJUSTMENT/SETTING

1. POINT TO CHECK

1.1 How To Use The Adjustment/Setting Section

1.1.1 Outline

- "Adjustment/Setting" contains detailed information on the adjustment items and procedures for this machine.
- Throughout this "Adjustment/Setting," the default settings are indicated by " ".

1.1.2 Advance checks

- Before attempting to work adjustments and settings, the following advance checks must be made. Check to see if:
  - The power supply voltage meets the specifications.
  - The power supply is properly grounded.
  - The machine shares the power supply with any other machine that draws large current intermittently (e.g., elevator and air conditioner that generate electric noise).
  - The installation site is environmentally appropriate: high temperature, high humidity, direct sunlight, ventilation, etc.; levelness of the installation site.
    A.3.3.2 Installation Requirements
  - The original has a problem that may cause a defective image.
  - The density is properly selected.
  - The original glass, slit glass, or related part is dirty.
  - Correct paper is being used for printing.
  - The units, parts, and supplies used for printing (developer, PC drum, etc.) are properly replenished and replaced when they reach the end of their useful service life.
  - Toner is not running out.

⚠WARNING

- **To unplug the power cord of the machine before starting the service job procedures.**
- **If it is unavoidably necessary to service the machine with its power turned ON, use utmost care not to be caught in the scanner cables or gears of the exposure unit.**
- **Special care should be used when handling the fusing unit which can be extremely hot.**

⚠ CAUTION

- **The developing unit has a strong magnetic field. Keep watches and measuring instruments away from it.**
- **Take care not to damage the PC drum with a tool or similar device.**
- **Do not touch IC pins with bare hands.**

1.2 Operating The Touch Panel

1.2.1 Precautions for Using the Touch Panel

This machine features a capacitance-base touch panel. Note the following points when operating the Touch Panel.

- Use your finger or the Stylus Pen supplied with this machine. Note that the Touch Panel will not respond appropriately if you operate it using your nail or a pen tip instead of your finger or the Stylus Pen.
- Applying a strong force to the Touch Panel will damages the Touch Panel, and potentially cause a breakage.
- When operating the Touch Panel, do not press on it using excessive force or with a pointed object such as a mechanical pencil.
- Be careful not to operate Touch Panel with wet fingers. It may cause Touch Panel to be improperly operated.
- If you operate the Touch Panel with a gloved finger, the Touch Panel will not respond normally. You should operate it with a bare finger or using the Stylus Pen supplied with this machine.
- Note that the Touch Panel may not respond normally if the distance between the user and fluorescent light is 19-11/16 inches (500 mm) or less when you operate the Touch Panel.

- You must not use the Touch Panel beside equipment that generates electrical noises such as an electric generator or air conditioner. Otherwise a malfunction may be caused by an influence of electrical noises.

1.2.2 Operating the Touch Panel

(1) Tap

- Lightly touch the screen with your finger, then remove your finger from the screen immediately.
- This action is available when selecting or determining a menu.



(2) Flick

- Make a slight fillip while sliding your finger on the screen.
- Used to scroll the destination/job list or to feed a page in the Main menu screen/Preview screen.

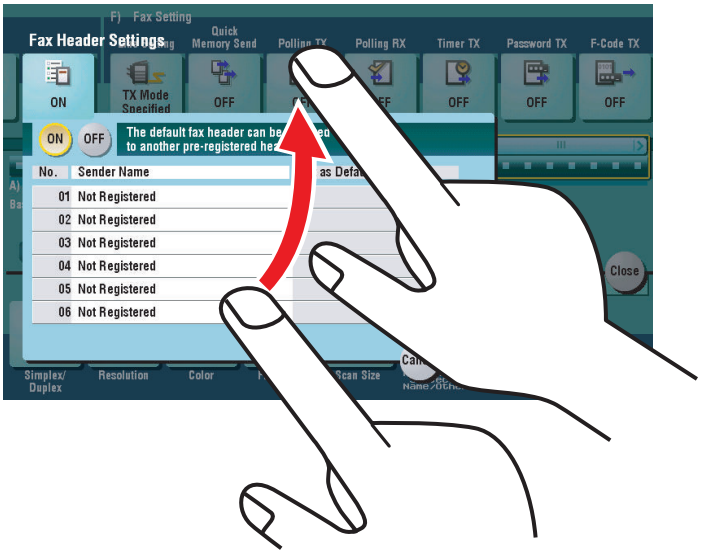

(3) Double-tap

- Lightly touch the screen with your finger twice in succession.
- Used to retrieve detailed information, to enlarge a thumbnail or preview image, and to open a User Box.

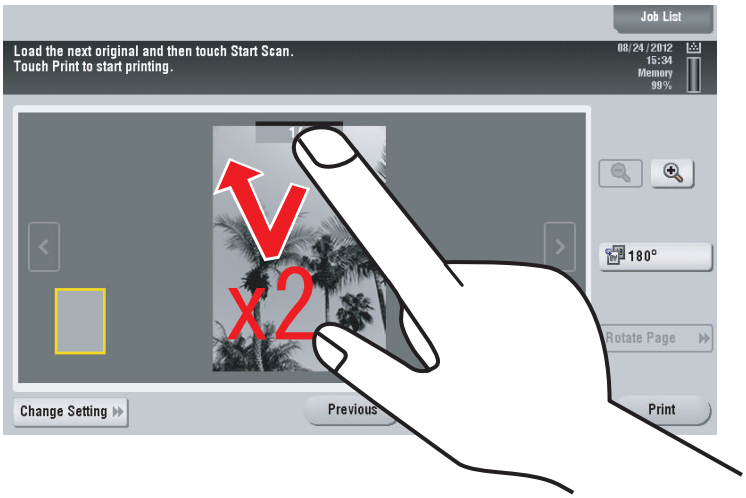

(4) Drag

- To move the scroll bar or document, place your finger on it and move your finger.
- Used to move the scroll bar or document.

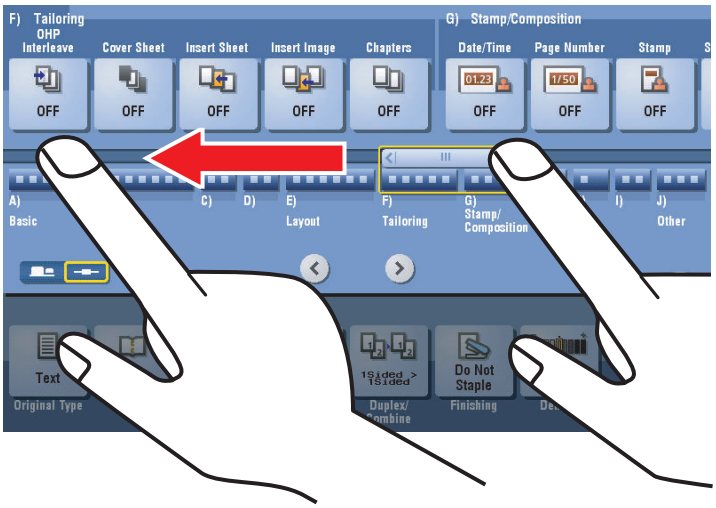

(5) Long-tap

- Hold down the document by the finger.
- Used to display the icon related to the document

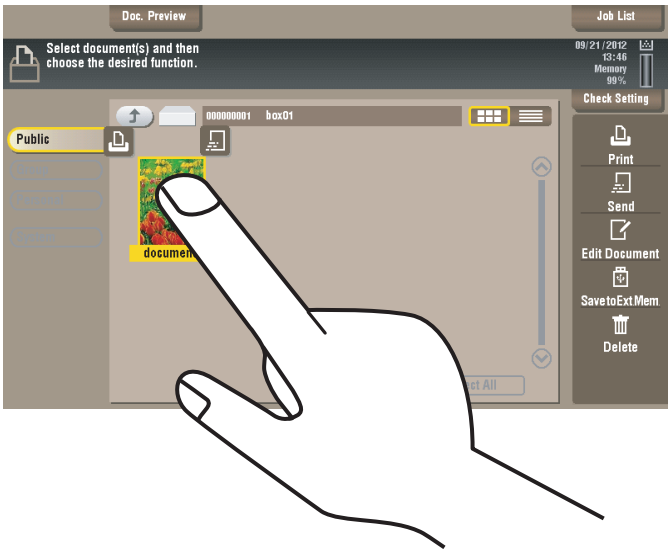

(6) Pan

- Slide your finger parallel in a front-to-back and side-to-side direction on the screen.
- Used to move to the intended display location if data spans multiple screens.

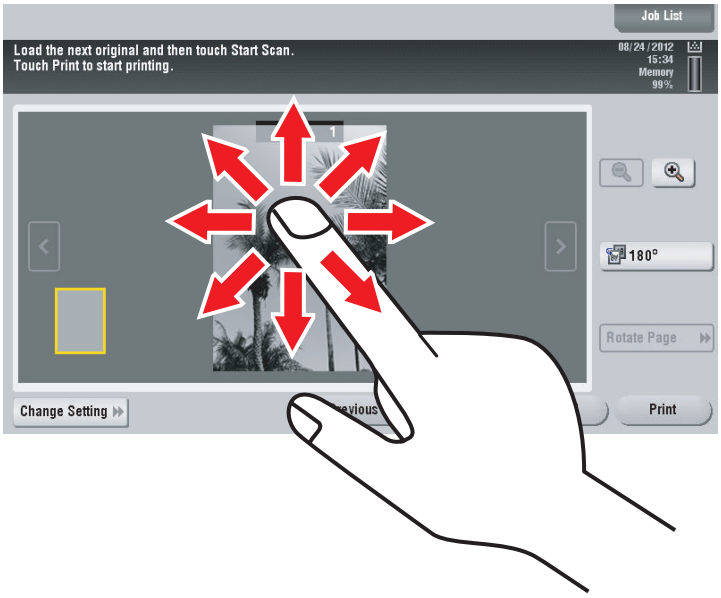

(7) Drag & Drop

- Slide your finger to the intended place and release it while a document is selected.
- Used to move the document to the intended place.

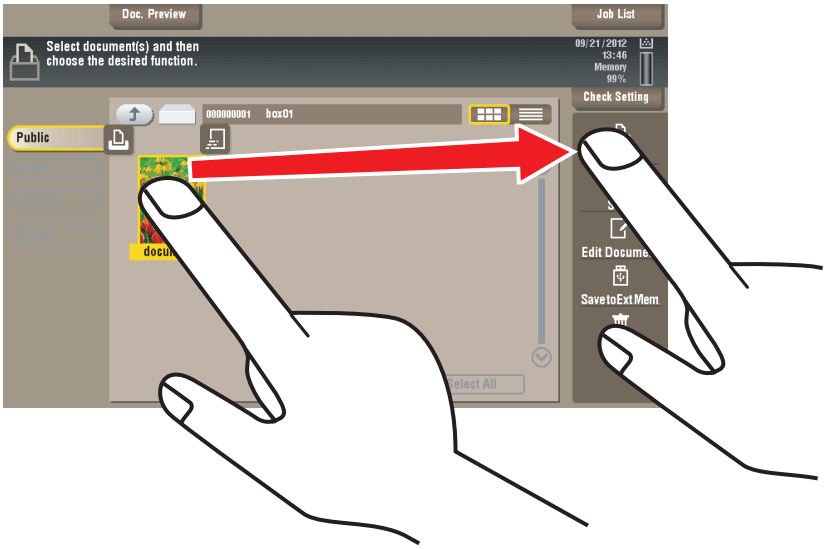

(8) Pinch-in / Pinch-out

- Place two fingers on the screen and then open or close them.
- Used to enlarge or reduce a preview image.

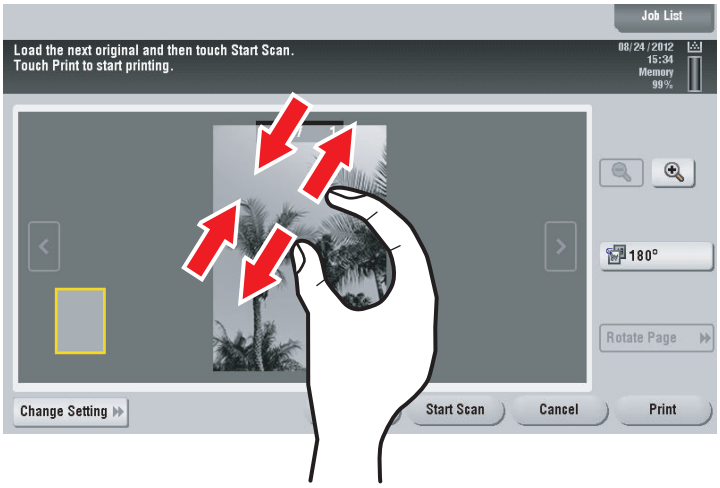

(9) Rotation

- Place two fingers on the screen and then rotate them.
- Used to rotate a preview finishing image.

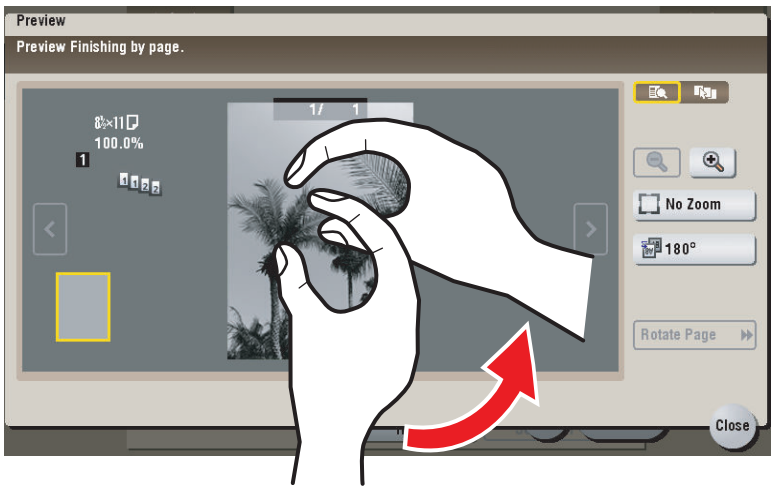

1.2.3 Operation of Keypad

(1) Displaying the Keypad

- Tap a number or input area on the screen to display the Keypad.
- Used to enter numerals.

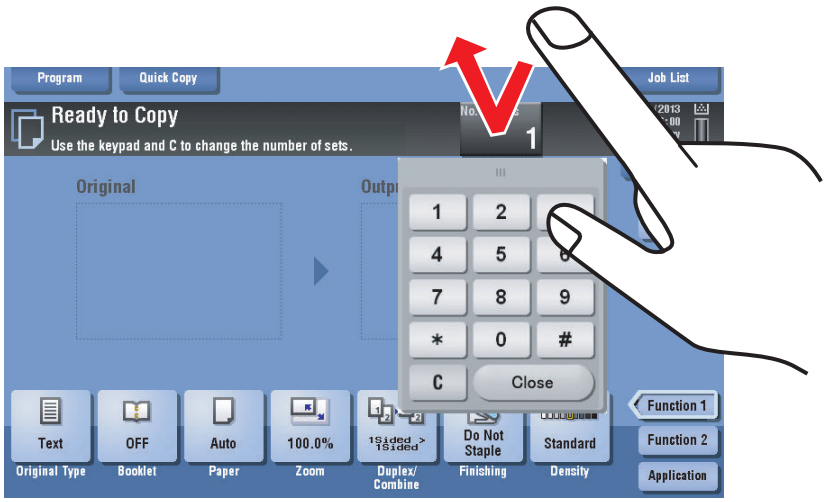

(2) Moving the Keypad

- Touch the top of the Keypad with your finger and move it as desired.
- Used to move the position to display the Keypad.

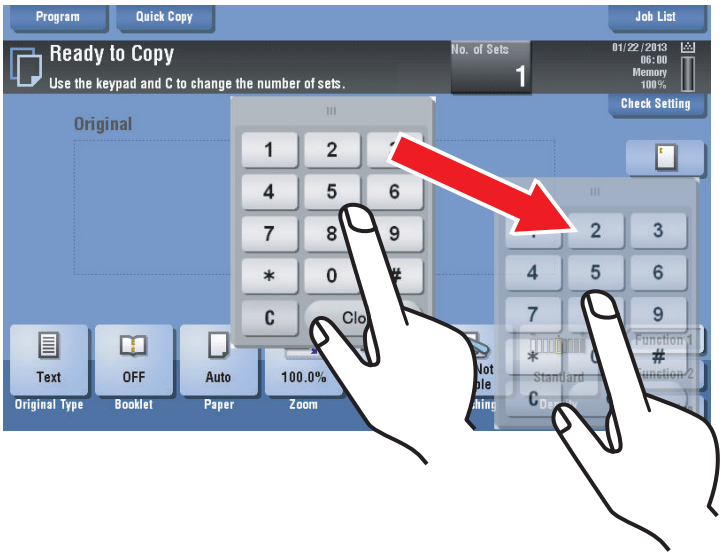

1.2.4 Switching the Entry or Selection Screen

- Tap a target input area or icon to switch to the entry or selection screen.
- Used to switch into the Select screen to enter text or select a registered item.

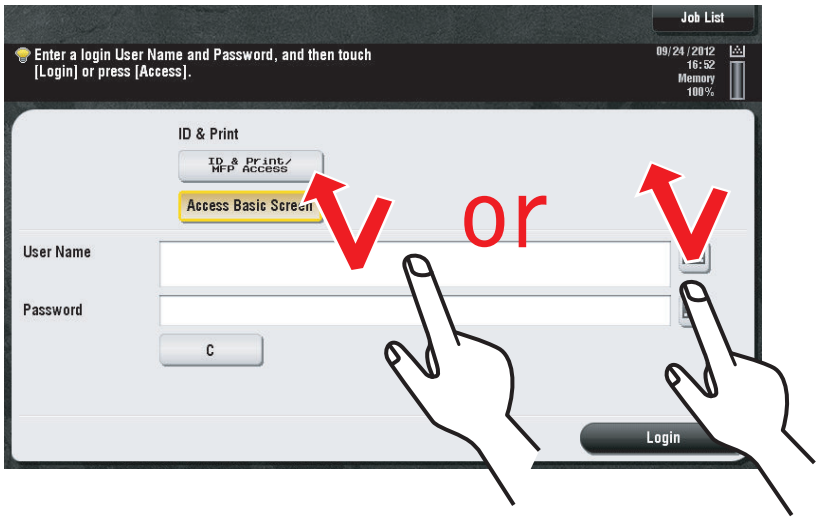

2. ACCESSIBILITY

Accessibility

- The function allows you to adjust the control panel settings by correcting the touch position on the touch panel and changing a sound made at the time of key operation.

2.1 Touch Panel Adjustment

2.1.1 Use

- To adjust the position of the touch panel display.
- Make this adjustment if the touch panel is slow to respond to a pressing action.
- Use during the setup procedure.

2.1.2 Procedure

1. Touch Menu.
2. Touch [Accessibility].
3. Touch [Touch Panel Adjustment].
4. By using the stylus attached on the machine, touch the four keys (+) on the screen in sequence.
   - These crosses may be touched in any order; but be sure to touch the center of each cross.
   - Use care not to damage the screen surface with the tip of the pen.

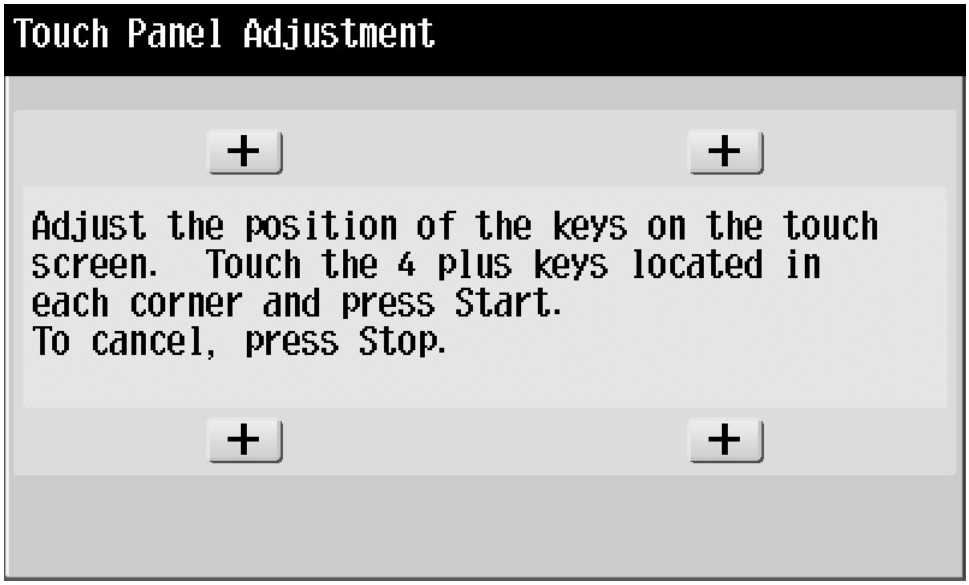

5. Touching all four crosses will turn the Start key ON in blue.
6. Press the Start key.

2.2 Brightness Adjustment

- Adjust the brightness level of the Touch Panel.

2.2.1 Procedure

1. Touch Menu.
2. Touch [Accessibility].
3. Touch [Brightness Adjustment].
4. Select [Low] or [High] to adjust the brightness.

2.3 Key Repeat Start/Interval Time

2.3.1 Time To Start

(1) Use

- Specify the length of time until a value begins to change after a key is held down.

(2) Default setting

- 0.8 sec.

(3) Setting range

- 0.1 to 3.0 sec.

2.3.2 Interval

(1) Use

- Specify the length of time for the value to change.

(2) Default setting

- 0.3 sec.

(3) Setting range

- 0.1 to 3.0 sec.

2.4 System Auto Reset Confirmation

2.4.1 Use

- If the system auto reset function activated in enlarge display mode cancels the mode, you can select whether or not to display the confirmation screen that gives you the options of continuing the operation without cancelling the enlarge display or cancelling the enlarge display to return to the basic settings screen.

2.4.2 Default setting

- No

2.4.3 Setting item

- Yes
- "No"
- When selecting [Yes], set the time period ("30 second", 60 second, 90 second, 120 second) during which the confirmation screen is displayed.

2.5 Auto Reset Confirmation

2.5.1 Use

- If the system auto reset function activated in enlarge display mode returns your setting to default, you can select whether or not to display the confirmation screen that gives you the options of continuing the operation without cancelling the current setting or cancelling the setting.

2.5.2 Default setting

- No

2.5.3 Setting item

- Yes
- "No"
- When selecting [Yes], set the time period ("30 second", 60 second, 90 second, 120 second) during which the confirmation screen is displayed.

2.6 Enlarge Display Mode Confirmation

2.6.1 Use

- To select whether or not to display the message that the settings configured in normal mode are cancelled at the time when you switch to enlarge display mode by pressing Enlarge Display.

2.6.2 Default setting

- OFF

2.6.3 Setting item

- ON
- "OFF"

2.7 Message Display Time

2.7.1 Use

- Specify the duration of time for displaying warning messages, which appear, for example, when an incorrect operation is performed.

2.7.2 Default setting

- 3 seconds

2.7.3 Setting item

- "3 seconds"
- 5 seconds

2.8 Sound Setting

2.8.1 Sound Setting

(1) Use

- Select whether to sound each [Confirmation Sound], [Successful Completion Sound], [Completed Preparation Sound], [Caution Sound], [Deletion Sound], [Authentication Sound].
- If [All Sounds] is set to [No], none of these sounds will be output.

(2) Default setting

- On

(3) Setting item

- "On"
- No

2.8.2 Sound Type/Volume Setting

- Set the sound type and volume for each [Operation Confirmation Sound], [Successful Completion Sound], [Completed Preparation Sound], [Caution Sound], [Deletion Sound], [Authentication Sound].
- When [Batch Setting] is selected, all the sound type and volume will be set at once. Select the sound type from six types (Techno, Chimes, New Age, Xylophone, Music Box, Beep) and select the sound volume from [High], [Medium], [Low] for adjustment.
- When [Individual Setting] is selected, all the sound type and volume will be set separately.

(1) Operation Confirmation Sound

(a) Use

- Select whether to output the operation confirmation sounds.
- When sounding, select the sound type from six types and select the sound volume from [High], [Medium], [Low] for adjustment as necessary.

Input Confirmation Sound	To select whether or not to produce a sound when a key in the control panel in the touch panel is pressed for an entry.
Invalid Sound	To select whether or not to produce a sound for invalid key operation in the control panel or the touch panel.
Basic Sound	To select whether or not to produce a sound when the default value item is selected for an option subject to rotational switching.
Window Pop-Up Sound	To select whether or not to produce a sound when Island Window or Balloon Window is opened.
Keyboard Operation Sound	To select whether or not to produce a sound when Keyboard screen or Keypad is operated.

(b) Default setting

- On/Beep/Medium

(c) Setting item

- "On"
- No

(2) Successful Completion Sound

(a) Use

- Select whether to output the successful completion sounds.
- When sounding, select the sound type from six types and select the sound volume from [High], [Medium], [Low] for adjustment as necessary.

Operation Complete Sound	To select whether or not to produce a sound when the operation has completed normally.
Transmission Completed Sound	To select whether or not to produce a sound when a communications-related operation is completed normally.
Print Job Complete Sound	To select whether or not to produce a sound when printing in PC is normally completed.
Fax RX Print Complete Sound	To select whether or not to produce a sound when printing for received Fax is normally completed.

(b) Default setting

- On/Beep/Medium

(c) Setting item

- "On"
- No

(3) Completed Preparation Sound

(a) Use

- To select whether or not to produce a sound when a device is ready (warm-up).
- When sounding, select the sound type from six types and select the sound volume from [High], [Medium], [Low] for adjustment as necessary.

(b) Default setting

- On/Beep/Medium

(c) Setting item

- "On"
- No

(4) Caution Sound

(a) Use

- Select whether to output the caution sounds.
- When sounding, select the sound type from six types and select the sound volume from [High], [Medium], [Low] for adjustment as necessary.

Low Caution Sound (Level 1)	To set whether or not to produce a sound when the replacement time is nearing for supplies or a replaceable part and a message appears in the touch panel.
Low Caution Sound (Level 2)	To set whether or not to produce a sound for a user error.
Low Caution Sound (Level 3)	To set whether or not to produce a sound when an error occurs that can be corrected by the user by referring to the message that appears or the User's Guide.
Severe Caution Sound	To set whether or not to produce a sound when an error occurs that cannot be corrected by the user or requires action by a service representative.

(b) Default setting

- On/Beep/Medium

(c) Setting item

- "On"
- No

(5) Deletion Sound

(a) Use

- Select whether to sound the deletion sound when document or job is deleted.
- When sounding, select the sound type from six types and select the sound volume from [High], [Medium], [Low] for adjustment as necessary.

(b) Default setting

- On/Beep/Medium

(c) Setting item

- "On"
- No

(6) Authentication Sound

(a) Use

- Select whether to sound the authentication sound depending on the results of authentication when login is performed.
- When sounding, select the sound type from six types and select the sound volume from [High], [Medium], [Low] for adjustment as necessary.

Authentication Successful Sound	To select whether or not to produce a sound when authentication of user/account has succeeded by touching login key in the user authentication screen.
Authentication Failure Sound	To select whether or not to produce a sound when authentication of user/account has failed by touching login key in the user authentication screen.

(b) Default setting

- On/Beep/Medium

(c) Setting item

- "On"
- No

2.9 Default Enlarge Display Settings

- This function is available when "Do not Apply" is selected in [Administrator Settings] -> [System Settings] -> [Reset Settings] -> [Job Reset] -> [Default Basic/Enlarge Display Common Setting].
- When "Apply to all" is selected in [Administrator Settings] -> [System Settings] -> [Reset Settings] -> [Job Reset] -> [Default Basic/Enlarge Display Common Setting], the settings configured in [Initial Setting] take effect.
- This function cannot be selected until you change a copy or scan/fax setting in enlarge display mode.

2.9.1 Use

- To configure default copy or scan/fax settings in enlarge mode.

2.9.2 Procedure

1. In enlarge display mode, change copy or scan/fax settings.
2. Touch Menu -> [Accessibility] -> [Default Enlarge Display Settings].
3. Select the copy or scan/fax function for which settings are changed in step 1.
4. Select [Current Setting] and touch [OK]. To restore factory defaults, select [Factory Default].

2.10 Voice Guidance Settings

- This function is available when “Yes” is selected in [Administrator Settings] -> [Voice Guidance Settings].
- To use voice guidance, the optional upgrade kit UK-204 and i-Option LK-104 v3 must be activated, and the optional local interface kit EK-606 or EK-607 is mounted.

2.10.1 Voice Guidance Settings

(1) Use

- To select whether or not to use the voice guidance function.

(2) Default setting

- Yes

(3) Setting item

- “Yes”
- No

2.10.2 Volume

(1) Use

- To set the volume of the voice guidance.
- While using the voice guidance, you can always change the volume by pressing the # or * key.

(2) Default setting

- 5

(3) Setting range

- 0 to 9

2.10.3 Voice Speed

(1) Use

- To set the voice guidance playback speed.

(2) Default setting

- Std.

(3) Setting item

- Slower
- “Std.”
- Faster

2.11 Double Tap Interval Settings

- Double tap is a way of operating the touch panel. Lightly touch the screen twice consecutively with your finger to call detailed information, enlarge a thumbnail or preview, or open User Box.
- To change the double-tap interval at five levels.

2.11.1 Procedure

1. Touch Menu.
2. Touch [Accessibility].
3. Touch [Double Tap Interval Settings].
4. Select the double-tap interval from [Slow], [Standard], or [Fast]. Double-tap the box at the right of the screen to check the current setting.

3. COUNTER

Counter

- This function allows you to check the total number of pages that have been printed in the MFP by each function and to print the data as a list when necessary.
- From user's usage condition, you can learn which types of image (coverage rate) are frequently output.
- You can check the rate of paper saving achieved as a result of two-sided printing or the page combine function, the transition of power consumption (Eco Info).

3.1 Meter Count

3.1.1 Meter Count

- You can check the total number of pages printed after the counting start date.

Black	To check the total number of pages printed in Black mode.

3.1.2 Copy

- To check the total number of pages copied.
- This value includes the number of pages on which data saved in a User Box in copy mode is printed, and the number of pages list-output in [Administrator Settings].

	Total	Large Size*	Total (Copy + Print)
Black	Indicates the total number of pages copied in Black mode	Indicates the total number of pages copied on large-size paper in Black mode	Indicates the total number of pages copied in Black mode and that of pages printed in Black mode through a computer

- *: The large size setting is configured in [Service Mode] -> [Billing Setting] -> [Counter Setting].

3.1.3 Print

- Check the total number of pages printed through a computer.

	Total	Large Size*	Total (Copy + Print)
Black	Indicates the total number of pages printed in Black mode	Indicates the total number of pages printed on large-size paper in Black mode.	Indicates the total number of pages copied in Black mode and that of pages printed in Black mode through a computer

- *: The large size setting is configured in [Service Mode] -> [Billing Setting] -> [Counter Setting].

3.1.4 Scan/Fax

- Check the total number of original pages scanned in the Scan/Fax*3 or User Box mode.
- Check the total number of pages on which a file in a User Box or a received file is printed.
- Check the total number of pages sent and received in the fax mode.

	Total	Large Size*1
Black	Indicates the total number of pages on which a file in a User Box or a received file is printed in Black mode*2	Indicates the total number of pages on which a file in a User Box or a received file is printed on large-size paper in Black mode*2
Scans	Indicates the total number of original pages scanned in the Scan/Fax and User Box modes	Indicates the total number of large-size original pages that are scanned in the Scan/Fax and User Box modes.
Fax TX	Indicates the total number of pages in a sent fax (G3)	-
Fax RX	Indicates the total number of pages in a received fax (G3)	-

- *1: The large size setting is configured in [Service Mode] -> [Billing Setting] -> [Counter Setting].
- *2: In the Memory RX mode, pages are counted when printed.
- *3: It will be displayed only when the optional FAX kit FK-511 is mounted.

3.1.5 Other

- Check the total number of scanned and printed original pages, total number of printed sheets, total number of pages printed on both sides, and the total number of printed pages regardless of functions.

Original Counter	To check the total number of original pages that are scanned and printed in the Copy, Print, and Scan/Fax modes*
Paper Counter	To check the total number of sheets that are printed in the Copy, Print, and Scan/Fax modes*
Total Duplex	To check the total number of pages printed on both sides
No. of Total Pages Output	To check the total number of printed pages

- *: If a file is saved in a User Box, its pages are not counted unless they are printed. Report or list output pages are not targeted for counting.

3.1.6 Print List

- The counter list is printed.

(1) Procedure

1. Touch [Print List].

2. Select a paper tray.
3. Select 1-Sided or 2-Sided, and touch [Start] or press the Start key.

3.1.7 Coverage Rate

NOTE

- **This coverage is a calculated value based on the colored area and the transfer paper area, and is different from the toner consumption when actually printed.**
- This is not displayed when [Service Mode] -> [System 2] -> [Coverage Rate Screen] is set to “Do Not Display.”
- The coverage rate can be cleared in [Service Mode] -> [Billing Setting] -> [Coverage Rate Clear].

(1) Use

- The coverage rate is the average printing dot percentage with A4 paper area as 100 %.
- The coverage rate displays the printing dot accumulated average (calculated in A4) for copy, printer, and fax/scan in unit of 0.001%.
- The coverage rate is calculated from all output excluding the following items.
  <Items excluded in the calculation>
  - Output of meter counter list
  - Output in service mode
  - Output automatically performed by MFP such as image stabilization pattern

3.1.8 Eco Info

- You can check the ratio of paper saving as a result two-sided printing or the page combine function, a transition of power consumption.
- Power Consumption and CO_2 Emission in [Eco Info 2] are not displayed when [Power Savings Display Level] is set to “OFF” in [Service Mode] -> [System 2] -> [Display Eco Index].

NOTE

- **“Power Consumption” displayed here is an estimated value calculated from the average amount of power consumption and the operating hours of MFP, so that is not an exact power consumption value.**
- **As “Output Coefficient” used to calculate CO_2 emission is different depending on the electric power provider with whom the user contracts and the user's MFP use environment, an appropriate CO_2 emission coefficient needs to be set in [Service Mode] -> [System 2] -> [Display Eco Index] in advance.**

(1) Procedure

1. Touch [Eco Info].
2. Touch [Eco Info 1] to check the paper saving rate.
3. Touch [Eco Info 2] to check the hours during which power is used, power consumption, and CO_2 emission.

3.2 Display Keypad

3.2.1 Use

- The Keypad is displayed in the left-hand pane.

4. UTILITY

4.1 List of utility mode (outline)

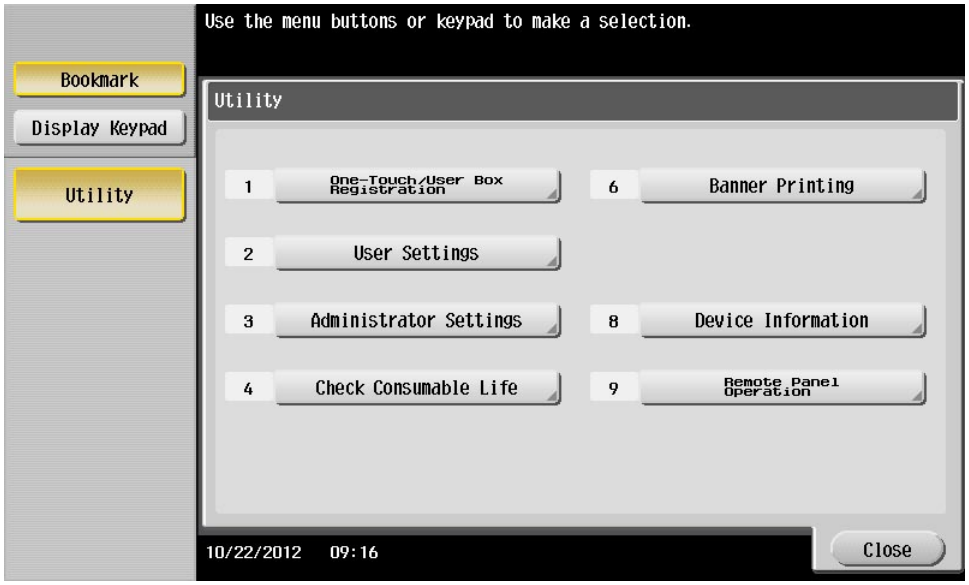

NOTE

- **Keys displayed on screens are different depending on the setting.**

Utility Mode	One-Touch/User Box Registration	Create One-Touch Destination	I.4.2.1 One-Touch/User Box Registration
		Create User Box	
		Limiting Access to Destinations	
	User Settings	System Settings	I.4.2.2 User Settings
		Custom Display Settings	
		Copier Settings	
		Scan/Fax Settings	
		Printer Settings	
		Change Password	
		Change E-mail Address	
		Register Authentication Settings	
		Synchronize User Auth. and Account Track	
		Cellular Phone/PDA Setting	
	Administrator Settings	System Settings	I.4.2.3 Administrator Settings
		Administrator/Machine Settings	
		One-Touch/User Box Registration	
		User Authentication/Account Track	
		Network Settings	
		Copier Settings	
		Printer Settings	
		Fax Settings *	
		System Connection	
		Security Settings	
		License Settings	
		Voice Guidance Settings	
		OpenAPI Certification Management Setting	
		External Memory Backup	
		Remote Access Setting	
	Check Consumable Life	Print List	I.4.2.4 Other Settings
	Banner Printing		
	My Panel Settings	Language Setting	
		Measurement Unit Setting	
		Copier Settings	
		Scan/Fax Settings	
		User Box Settings	
		Color Selection Setting	

		Main Menu Settings	
		Initial Screen Setting	
	Device Information		
	Remote Panel Operation		

- *: It will be displayed only when the optional fax kit FK-511 is mounted.

4.2 List of utility mode (detail)

4.2.1 One-Touch/User Box Registration



NOTE

- **Keys displayed on screens are different depending on the setting.**

One-Touch/User Box Registration			Ref. page
Create One-Touch Destination	Address Book (Public)/(Personal)	E-Mail	I.5.1.1.(1) E-Mail
		User Box	I.5.1.1.(2) User Box
		Fax	I.5.1.1.(3) Fax
		PC (SMB)	I.5.1.1.(4) PC (SMB)
		FTP	I.5.1.1.(5) FTP
		WebDAV	I.5.1.1.(6) WebDAV
		IP Address Fax	I.5.1.1.(7) IP Address Fax
		Internet Fax	I.5.1.1.(8) Internet Fax
	Group		I.5.1.2 Group
	E-Mail Settings	E-Mail Subject	I.5.1.3.(1) E-Mail Subject
		E-mail Body	I.5.1.3.(2) E-mail Body
Create User Box	Public/Personal User Box		I.5.2.1 Public/Personal User Box
	Bulletin Board User Box		I.5.2.2 Bulletin Board User Box
	Relay User Box		I.5.2.3 Relay User Box
Limiting Access to Destinations	Apply Levels/Groups to Destinations	Address Book	I.5.3.1.(1) Address Book
		Group	I.5.3.1.(2) Group
		Program	I.5.3.1.(3) Program

4.2.2 User Settings

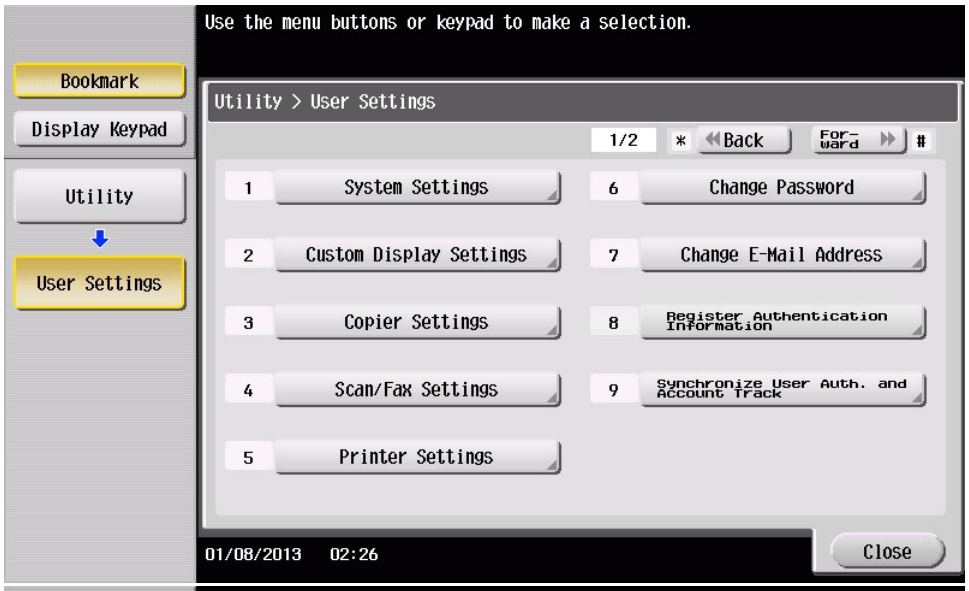

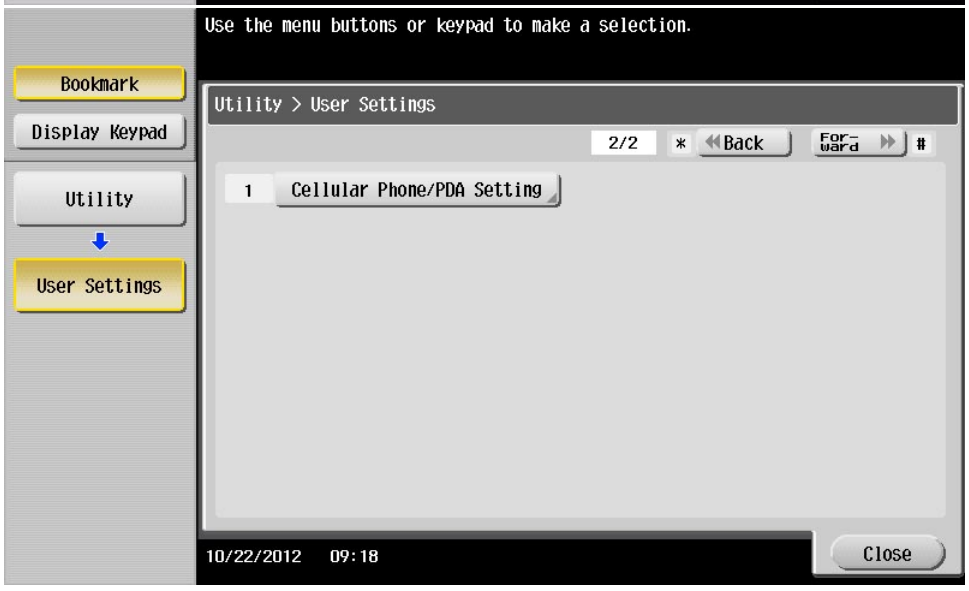

(1) System Settings

NOTE

- **Keys displayed on screens are different depending on the setting.**
- **For displaying the keys with *, ** marks, see "I.7.91 Security Settings-Administrator Security Levels."**

User Settings			Ref. page
System Settings	Language Selection		I.6.1.1 Language Selection
	Select Keyboard		I.6.1.4 Select Keyboard
	Measurement Unit Settings		I.6.1.5 Measurement Unit Settings
	Paper Tray Settings	Auto Tray Selection Settings	I.6.1.6.(1) Auto Tray Selection Settings
		Auto Tray Switch ON/OFF	I.6.1.6.(3) Auto Tray Switch ON/OFF
		No Matching Paper in Tray Setting	I.6.1.6.(4) No Matching Paper in Tray Setting
		Print Lists	I.6.1.6.(5) Print Lists
	Auto Color Level Adjust.		I.6.1.7 Auto Color Level Adjust.
	Power Supply/Power Save Settings*	Low Power Mode Settings*	I.6.1.8.(1) Low Power Mode Settings
		Sleep Mode Settings*	I.6.1.8.(2) Sleep Mode Settings
	Output Settings**	Print/Fax Output Settings** Print**	I.6.1.9.(1) Print/Fax Output Settings
		Fax**	
		Output Tray Settings**	I.6.1.9.(2) Output Tray Settings
	AE Level Adjustment**		I.6.1.10 AE Level Adjustment

User Settings		Ref. page
	Auto Paper Select for Small Original	I.6.1.11 Auto Paper Select for Small Original
	Blank Page Print Settings**	I.6.1.12 Blank Page Print Settings
	Page Number Print Position**	I.6.1.13 Page Number Print Position
	Blank Sheet Detection Level	I.6.1.14 Blank Sheet Detection Level
	Separate Scan from Platen	I.6.1.15 Separate Scan from Platen

(2) Custom Display Settings

NOTE

- **Keys displayed on screens are different depending on the setting.**

User Settings			Ref. page
Custom Display Settings	Copier Settings	Default Tab	I.6.2.1.(1) Default Tab
		Quick Settings 1	I.6.2.1.(2) Quick Settings 1, 2
		Quick Settings 2	
	Scan/Fax Settings	Default Tab	I.6.2.2.(1) Default Tab
		Program Default	I.6.2.2.(2) Program Default
		Address Book Index Default	I.6.2.2.(3) Address Book Index Default-Index
			I.6.2.2.(4) Address Book Index Default-Address Type
		Default Address Sort Method	I.6.2.2.(5) Default Address Sort Method
		Default Address Display Method	I.6.2.2.(6) Default Address Display Method
	User Box Settings	Default Tab	I.6.2.3.(1) Default Tab
		Shortcut Key 1	I.6.2.3.(2) Shortcut Key 1/2
		Shortcut Key 2	
	Function Display Key (Copy/Print)		I.6.2.4 Function Display Key (Copy/Print)
	Function Display Key (Send/Save)		I.6.2.5 Function Display Key (Send/Save)
	Default Application Screen Type Setting		I.6.2.6 Default Application Screen Type Setting
	Copy Screen	Copy Operating Screen	I.6.2.7 Copy Screen
	Fax Active Screen	TX Display	I.6.2.8.(1) TX Display
		RX Display	I.6.2.8.(2) RX Display
	Animation Settings		I.6.2.9 Animation Settings
	Search Option Settings		I.6.2.10 Search Option Settings

(3) Copier Settings

NOTE

- **Keys displayed on screens are different depending on the setting.**
- **For displaying the keys with *, ** marks, see "I.7.91 Security Settings-Administrator Security Levels."**

User Settings		Ref. page
Copier Settings	Auto Booklet Selection for Saddle Stitching	I.6.3.1 Auto Booklet Selection for Saddle Stitching
	Auto Zoom for Combine/Booklet	I.6.3.2 Auto Zoom for Combine/ Booklet
	Booklet Short Cut Mode	I.6.3.3 Booklet Short Cut Mode
	Auto Sort/Group Selection	I.6.3.4 Auto Sort/Group Selection
	Default Copy Settings	I.6.3.5 Default Copy Settings
	Default Enlarge Display Settings	I.6.3.6 Default Enlarge Display Settings
	When AMS Direction is Incorrect	I.6.3.7 When AMS Direction is Incorrect
	Separate Scan Output Method	I.6.3.8 Separate Scan Output Method
	Enlargement Rotation	I.6.3.9 Enlargement Rotation
	Auto Zoom (Platen) *	I.6.3.10 Auto Zoom (Platen)

User Settings			Ref. page
	Auto Zoom (ADF) *		I.6.3.11 Auto Zoom (ADF)
	Specify Default Tray when APS Off*		I.6.3.12 Specify Default Tray when APS Off
	Select Tray for Insert Sheet		I.6.3.13 Select Tray for Insert Sheet
	Tri-Fold Print Side*		I.6.3.14 Tri-Fold Print Side
	Print Jobs During Copy Operation**		I.6.3.15 Print Jobs During Copy Operation
	Automatic Image Rotation*		I.6.3.16 Automatic Image Rotation
	Finishing Program		I.6.3.17 Finishing Program
	Card Shot Settings	Layout	I.6.3.18.(1) Layout
		Zoom	I.6.3.18.(2) Zoom
		Store Original Size	I.6.3.18.(3) Store Original Size

(4) Scan/Fax Settings

NOTE

- **Keys displayed on screens are different depending on the setting.**

User Settings		Ref. page
Scan/Fax Settings	JPEG Compression Level	I.6.4.1 JPEG Compression Level
	Black Compression Level	I.6.4.2 Black Compression Level
	TWAIN Lock Time	I.6.4.3 TWAIN Lock Time
	Default Scan/Fax Settings	I.6.4.4 Default Scan/Fax Settings
	Default Enlarge Display Settings	I.6.4.5 Default Enlarge Display Settings
	Compact PDF/XPS Compression Level	I.6.4.6 Compact PDF/XPS Compression Level
	Color TIFF Type	I.6.4.7 Color TIFF Type
	OCR Operation Setting	I.6.4.8 OCR Operation Setting
	Graphic Outlining	I.6.4.9 Graphic Outlining
	Auto Rename Function	I.6.4.10 Auto Rename Function

(5) Printer Settings

NOTE

- **Keys displayed on screens are different depending on the setting.**

User Settings			Ref. page
Printer Settings	Basic Settings	PDL Setting	I.6.5.1.(1) PDL Setting
		Number of Copies	I.6.5.1.(2) Number of Copies
		Original Direction	I.6.5.1.(3) Original Direction
		Spool Print Jobs in HDD before RIP	I.6.5.1.(4) Spool Print Jobs in HDD before RIP
		A4/A3 <-> LTR/LGR Auto Switch	I.6.5.1.(5) A4/A3 <--> LTR/LGR Auto Switch
		Banner Sheet Setting	I.6.5.1.(6) Banner Sheet Setting
		Binding Direction Adjustment	I.6.5.1.(7) Binding Direction Adjustment
		Line Width Adjustment	I.6.5.1.(8) Line Width Adjustment
		Gray Background Text Correction	I.6.5.1.(9) Gray Background Text Correction
		Minimal Print	I.6.5.1.(10) Minimal Print
		OOXML Print Mode	I.6.5.1.(11) OOXML Print Mode
		Fold Type Settings	I.6.5.1.(12) Fold Type Settings
		Half-Fold/Tri-Fold Specification Settings	I.6.5.1.(13) Half-Fold/Tri-Fold Specification Settings
	Paper Setting	Paper Tray	I.6.5.2.(1) Paper Tray
		Paper Size	I.6.5.2.(2) Paper Size
		2-Sided Print	I.6.5.2.(3) 2-Sided Print
		Binding Position	I.6.5.2.(4) Binding Position
		Staple	I.6.5.2.(5) Staple
		Punch	I.6.5.2.(6) Punch
		Banner Paper Tray	I.6.5.2.(7) Banner Paper Tray

User Settings			Ref. page
	PCL Settings	Font Settings	I.6.5.3.(1) Font Settings
		Symbol Set	I.6.5.3.(2) Symbol Set
		Font Size	I.6.5.3.(3) Font Size
		Line/Page	I.6.5.3.(4) Line/Page
		CR/LF Mapping	I.6.5.3.(5) CR/LF Mapping
		Bar Code Font Settings	I.6.5.3.(6) Bar Code Font Settings
	PS Setting	Print PS Errors	I.6.5.4.(1) Print PS Errors
	Security Settings	Verify XPS/OOXML Digital Signature	I.6.5.5.(1) Verify XPS/OOXML Digital Signature
	OOXML Print Settings	Print Sheet/Book	I.6.5.6.(1) Print Sheet/Book
		Paper Size	I.6.5.6.(2) Paper Size
		Paper Type	I.6.5.6.(3) Paper Type
	Layout - Combination		I.6.5.7 Layout - Combination
	Print Reports	Configuration Page	I.6.5.8 Print Reports
		Demo Page	
		PCL Font List	
		PS Font List	
	TIFF Image Paper Setting		I.6.5.9 TIFF Image Paper Setting

(6) Other

NOTE

- **Keys displayed on screens are different depending on the setting.**
- **For displaying the keys with *, ** marks, see "I.7.91 Security Settings-Administrator Security Levels."**

User Settings		Ref. page
Change Password		I.6.6 Change Password
Change E-mail Address**		I.6.7 Change E-Mail Address
Register Authentication Settings		I.6.8 Register Authentication Settings
Synchronize User Auth. and Account Track		I.6.9 Synchronize User Auth. and Account Track
Cellular Phone/ PDA Setting	Link File Error Notification	I.6.10.1 Link File Error Notification
	Proxy Server Use	I.6.10.2 Proxy Server Use
	Print	I.6.10.3 Print

4.2.3 Administrator Settings

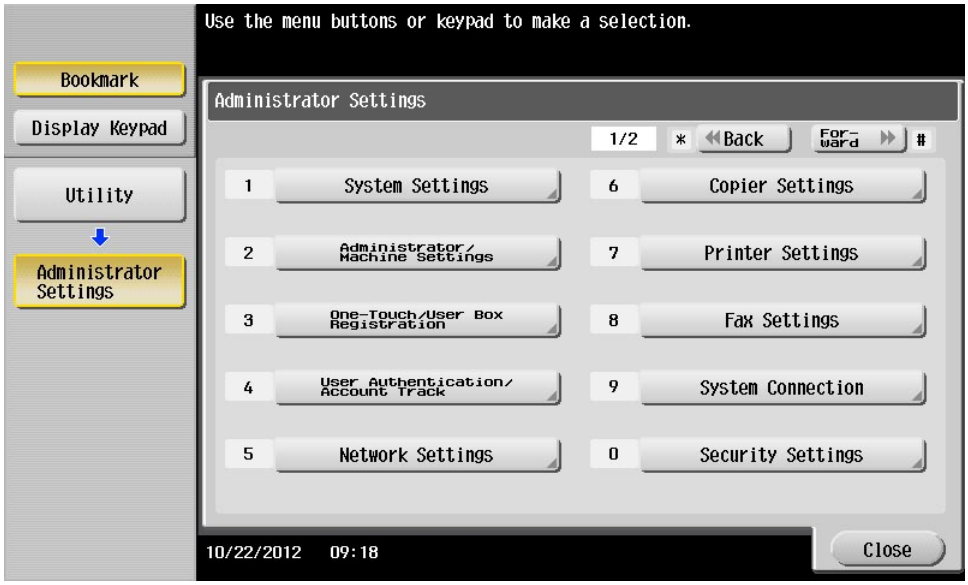

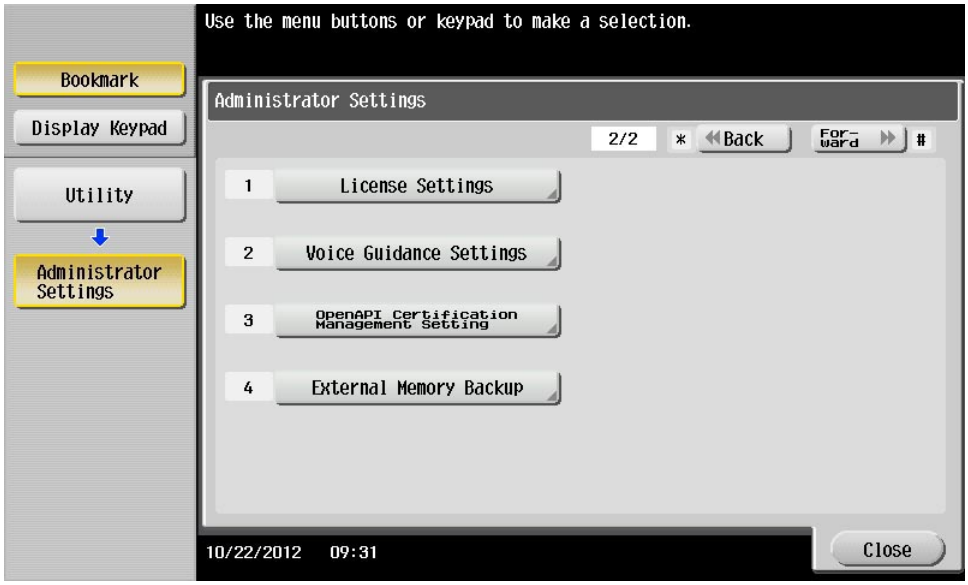

(1) System Settings

NOTE

- **Keys displayed on screens are different depending on the setting.**
- **For displaying the keys with *** marks, see "I.12.3.3 Administrator Feature Level."**

Administrator Settings				Ref. page
System Settings	Power Supply/Power Save Settings	Low Power Mode Settings		I.7.1.1 Low Power Mode Settings
		Sleep Mode Settings		I.7.1.2 Sleep Mode Settings
		Power Key Setting		I.7.1.3 Power Key Setting
		Power Save Settings		I.7.1.4 Power Save Settings
		Enter Power Save Mode		I.7.1.5 Enter Power Save Mode
		Power Consumption in Sleep Mode		I.7.1.6 Power Consumption in Sleep Mode
		Power Saving Fax/Scan		I.7.1.7 Power Saving Fax/Scan
		Awake from Power Save Mode by Touching Control Panel		I.7.1.8 Awake from Power Save Mode by Touching Control Panel
	Output Settings	Print/Fax Output Settings	Print	I.7.2.1 Print/Fax Output Settings
			Fax	
		Output Tray Settings		I.7.2.2 Output Tray Settings
		Shift Output Each Job		I.7.2.3 Shift Output Each Job
	Date/Time Settings			I.7.3 System Settings-Date/Time Settings
	Daylight Saving Time			I.7.4 System Settings-Daylight Saving Time
	Weekly Timer Settings	Weekly Timer ON/OFF Settings		I.7.5.1 Weekly Timer ON/OFF Settings
		Time Settings		I.7.5.2 Time Settings
		Date Settings		I.7.5.3 Date Settings
		Select Time for Power Save		I.7.5.4 Select Time for Power Save
		Password for Non-Business Hours		I.7.5.5 Password for Non-Business Hours
		Tracking Function Settings		I.7.5.6 Tracking Function Settings
		Display ON/OFF Time		I.7.5.7 Display ON/OFF Time
	Restrict User Access	Restrict Program Function Setting		I.7.6.1 Restrict Program Function Setting
		Copy Program Lock Settings		I.7.6.2 Copy Program Lock Settings
		Delete Saved Copy Program		I.7.6.3 Delete Saved Copy Program
		Restrict Access to Job Settings	Changing Job Priority	I.7.6.4.(1) Changing Job Priority
			Delete Other User Jobs	I.7.6.4.(2) Delete Other User Jobs
			Registering and Changing Addresses	I.7.6.4.(3) Registering and Changing Addresses

Administrator Settings				Ref. page
			Changing Zoom Ratio	I.7.6.4.(4) Changing Zoom Ratio
			Changing the “From” Address	I.7.6.4.(5) Change the “From” Address
			Change Registered Overlay	I.7.6.4.(6) Change Registered Overlay
			Biometric/IC Card Info. Registration	I.7.6.4.(7) Biometric/IC Card Info. Registration
			Synchronize User Authentication & Account Track	I.7.6.4.(8) Synchronize User Authentication & Account Track
		Restrict Operation	Restrict Broadcasting	I.7.6.5.(1) Restrict Broadcasting
	Expert Adjustment	AE Level Adjustment		I.7.7.1 AE Level Adjustment
		Printer Adjustment	Leading Edge Adjustment	I.7.7.2 Printer Adjustment-Leading Edge Adjustment
			Centering	I.7.7.3 Printer Adjustment-Centering
			Leading Edge Adjustment (Duplex Side 2)	I.7.7.4 Printer Adjustment-Leading Edge Adjustment (Duplex Side 2)
			Centering (Duplex 2nd Side)	I.7.7.5 Printer Adjustment-Centering (Duplex 2nd Side)
			Erase Leading Edge ***	I.7.7.6 Printer Adjustment-Erase Leading Edge
			Vertical Adjustment ***	I.7.7.7 Printer Adjustment-Vertical Adjustment
			Media Adjustment	I.7.7.8 Printer Adjustment-Media Adjustment
		Finisher Adjustment	Center Staple Position	I.7.7.9 Finisher Adjustment-Center Staple Position
			Half-Fold Position	I.7.7.10 Finisher Adjustment-Half-Fold Position
			1st Tri-Fold Position Adjustment	I.7.7.11 Finisher Adjustment-1st Tri-Fold Position Adjustment/2nd Tri-Fold Position Adjustment
			2nd Tri-Fold Position Adjustment	
			Punch Horizontal Position Adjustment	I.7.7.12 Finisher Adjustment-Punch Horizontal Position Adjustment
			Paper Alignment Plate Settings	I.7.7.13 Finisher Adjustment-Paper Alignment Plate Settings
			Punch Regist Loop Size Adjustment	I.7.7.14 Finisher Adjustment-Punch Regist Loop Size Adjustment
		Density Adjustment	Thick Type1	I.7.7.15 Density Adjustment
			Thick Type2	
		Image Stabilization	Image Stabilization Only - Initialize + Image Stabilization	I.7.7.16.(1) Image Stabilization Only-Initialize+Image Stabilization
			Image Stabilization Only - Image Stabilization Only	I.7.7.16.(2) Image Stabilization Only-Image Stabilization Only
		Paper Separation Adjustment		I.7.7.17 Paper Separation Adjustment
		Gradation Adjustment	Image Stabilization Only	I.7.7.18 Gradation Adjustment
			Print	
			Copy	
		Scanner Area ***	Scanner Adjustment: Leading Edge ***	I.7.7.20 Scanner Area-Scanner Adjustment: Leading Edge
			Scanner Adjustment: Centering ***	I.7.7.21 Scanner Area-Scanner Adjustment: Centering
			Horizontal Adjustment ***	I.7.7.22 Scanner Area-Horizontal Adjustment
			Vertical Adjustment ***	I.7.7.23 Scanner Area-Vertical Adjustment
		ADF Adjustment ***	Centering***	I.7.7.24.(1) Centering
			Original Stop Position***	I.7.7.24.(2) Original Stop Position
			Centering Auto Adjustment***	I.7.7.24.(3) Centering Auto Adjustment

Administrator Settings					Ref. page
				Auto Adj. of Stop Position***	I.7.7.24.(4) Auto Adj. of Stop Position
			Line Detection	Prior Detection Setting (Front Side, Back Side)	I.7.7.25 Line Detection-Prior Detection Setting (Front Side, Back Side)
				Feed Cleaning Settings	I.7.7.26 Line Detection-Feed Cleaning Settings
			Trail Edge Adjust		I.7.7.27 Trail Edge Adjust
			User Paper Settings ***		I.7.7.28 User Paper Settings
			Erase Adjustment	Non-Image Area Erase Operation Settings	I.7.7.29 Erase Adjustment-Non-Image Area Erase Operation Settings
			PS Designer Settings		I.7.7.30 PS Designer Settings
	List/Counter		Management List	Job Settings List	I.7.8.1.(1) Job Settings List
			Paper Size/Type Counter		I.7.8.2 Paper Size/Type Counter
			Meter Counter List		I.7.8.3 Meter Counter List
			Check Consumables List		I.7.8.4 Check Consumables List
			Transmission Meter Count and Device Information		I.7.8.5 Transmission Meter Count and Device Information
			TX Operation Log Output		I.7.8.6 TX Operation Log Output
	Reset Settings		System Auto Reset		I.7.9.1 System Auto Reset
			Auto Reset		I.7.9.2 Auto Reset
			Job Reset	When Account is changed	I.7.9.3.(1) When Account is changed
				When Original is set on ADF	I.7.9.3.(2) When Original is set on ADF
				Next Job: Staple Setting	I.7.9.3.(3) Next Job: Staple Setting
				Next Job: Original Set/Bind Direction	I.7.9.3.(4) Next Job: Original Set/Bind Direction
				Next Job: Reset Data After Job	I.7.9.3.(5) Next Job: Reset Data After Job
				Default Basic/Enlarge Display Common Setting	I.7.9.3.(6) Default Basic/Enlarge Display Common Setting
	User Box Settings		Delete Unused User Box		I.7.10.1 Delete Unused User Box
			Delete Secure Print Documents		I.7.10.2 Delete Secure Print Documents
			Auto Delete Secure Document		I.7.10.3 Auto Delete Secure Document
			Encrypted PDF Delete Time		I.7.10.4 Encrypted PDF Delete Time
			ID & Print Delete Time		I.7.10.5 ID & Print Delete Time
			Document Hold Setting		I.7.10.6 Document Hold Setting
			External Memory Function Settings		I.7.10.7 External Memory Function Settings
			Allow/Restrict User Box		I.7.10.8 Allow/Restrict User Box
			ID & Print Delete after Print Setting		I.7.10.9 ID & Print Delete after Print Setting
			Document Delete Time Setting		I.7.10.10 Document Delete Time Setting
			Document in MFP Shared Folder Delete Time Setting		I.7.10.11 Document in MFP Shared Folder Delete Time Setting
	Standard Size Setting***		Original Glass Original Size Detect***		I.7.11.1 Original Glass Original Size Detect
			$8^1/_2$ × 14/Foolscap Size Detection		I.7.11.2 81/2 × 14/Foolscap Size Detection
			Foolscap Size Setting***		I.7.11.3 Foolscap Size Setting
			ADF Size Detection		I.7.11.4 ADF Size Detection
	Stamp Settings		Header/Footer Settings		I.7.12.1 Header/Footer Settings
			Fax TX Settings		I.7.12.2 Fax TX Settings
	Blank Page Print Settings				I.7.13 System Settings-Blank Page Print Settings

Administrator Settings				Ref. page
	Registered Key Settings			I.7.14 System Settings-Registered Key Settings
	Job Priority Operation Settings	Fax RX Job Priority		I.7.15.1 Fax RX Job Priority
		Skip Job (Fax)		I.7.15.2 Skip Job (Fax)
		Skip Job (Copy, Print)		I.7.15.3 Skip Job (Copy, Print)
	Default Bypass Paper Type Setting			I.7.16 System Settings-Default Bypass Paper Type Setting
	Page Number Print Position			I.7.17 System Settings-Page Number Print Position
	Preview Settings	Original Direction Confirmation Screen		I.7.18.1 Original Direction Confirmation Screen
		Realtime Preview		I.7.18.2 Realtime Preview
		Preview Display Conditions (Standard Application)		I.7.18.3 Preview Display Conditions (Standard Application)
		Preview Display Conditions (Registered Application)		I.7.18.4 Preview Display Conditions (Registered Application)
	Enlarge Display Settings	Display Default Setting		I.7.19.1 Display Default Setting
		Apply Basic Setting to Enlarge Display		I.7.19.2 Apply Basic Setting to Enlarge Display
	Scan File Name Settings	Function Mode Initial		I.7.20.1 Function Mode Initial
		Supplementary File Name		I.7.20.2 Supplementary File Name
	PDF Settings	PDF/A Default Settings		I.7.21.1 PDF/A Default Settings
		PDF Web Optimization Default Settings		I.7.21.2 PDF Web Optimization Default Settings
		Searchable PDF Settings		I.7.21.3 Searchable PDF Settings
	Set Paper Name by User			I.7.22.1 Set Paper Name by User
	Custom Display Settings	Main Menu Default Settings		I.7.23.1 Main Menu Default Settings
		Main Menu Display Settings		I.7.23.2 Main Menu Display Settings
		Custom Function Pattern Selection		I.7.23.3 Custom Function Pattern Selection
		User/Admin Function Permissions		I.7.23.4 User/Admin Function Permissions
		Function Display Key Permission Setting	Copy/Print	I.7.23.5 Function Display Key Permission Setting-Copy/Print
			Send/Save	I.7.23.6 Function Display Key Permission Setting-Send/Save
		Temporarily Change Language Setting		I.7.23.7 Temporary Change Language Setting
		Display 10 Keypad when entering Number of Sets		I.7.23.8 Display 10 Keypad when entering Number of Sets

(2) Administrator/Machine Settings · One-Touch/User Box Registration

NOTE

- **Keys displayed on screens are different depending on the setting.**

Administrator Settings				Ref. page
Administrator/ Machine Settings	Administrator Registration			I.7.24.1 Administrator Registration
	Input Machine Address			I.7.24.2 Input Machine Address
One-Touch/User Box Registration	Create One-Touch Destination	Address Book (Public)/(Personal)	E-Mail	I.7.25.1.(1) E-Mail
			User Box	I.7.25.1.(2) User Box
			Fax	I.7.25.1.(3) Fax
			PC (SMB)	I.7.25.1.(4) PC (SMB)
			FTP	I.7.25.1.(5) FTP
			WebDAV	I.7.25.1.(6) WebDAV
			IP Address Fax	I.7.25.1.(7) IP Address Fax
			Internet Fax	I.7.25.1.(8) Internet Fax
		Group		I.7.25.2 Group
		E-Mail Settings	E-Mail Subject	I.7.25.3.(1) E-Mail Subject
			E-mail Body	I.7.25.3.(2) E-mail Body

Administrator Settings			Ref. page
	Create User Box	Public/Personal User Box	I.7.26.1 Public/Personal User Box
		Bulletin Board User Box	I.7.26.2 Bulletin Board User Box
		Relay User Box	I.7.26.3 Relay User Box
		Annotation User Box	I.7.26.4 Annotation User Box
	One-Touch/User Box Registration List	Address Book List	I.7.27.1 Address Book List
		Group List	I.7.27.2 Group List
		Program List	I.7.27.3 Program List
		E-Mail Subject/Text List	I.7.27.4 E-Mail Subject/Text List
	Maximum Number of User Boxes		I.7.28 One-Touch/User Box Registration-Maximum Number of User Boxes

(3) User Authentication/Account Track

NOTE

- **Keys displayed on screens are different depending on the setting.**

Administrator Settings				Ref. page
User Authentication/ Account Track	General Settings			I.7.29 User Authentication/ Account Track-General Settings
	User Authentication Settings	Administrative Settings	User Name List	I.7.30.1.(1) User Name List
			Default Function Permission	I.7.30.1.(2) Default Function Permission
			ID & Print Settings	I.7.30.1.(3) ID & Print Settings
			ID & Print Operation Settings	I.7.30.1.(4) ID & Print Operation Settings
			Default Operation Selection	I.7.30.1.(5) Default Operation Selection
		User Registration		I.7.30.2 User Registration
		User Counter		I.7.30.3 User Counter
	Account Track Settings	Account Track Registration		I.7.31.1 Account Track Registration
		Account Track Counter		I.7.31.2 Account Track Counter
	Print without Authentication			I.7.32 User Authentication/ Account Track-Print without Authentication
	Print Counter List			I.7.33 User Authentication/ Account Track-Print Counter List
	External Server Settings			I.7.34 User Authentication/ Account Track-External Server Settings
	Limiting Access to Destinations	Create Group		I.7.35.1 Create Group
		Apply Levels/Groups to Destinations		I.7.35.2 Apply Levels/Groups to Destinations
		Apply Levels/Groups to Users		I.7.35.3 Apply Levels/Groups to Users
	Authentication Device Settings	General Settings		I.7.36.1 General Settings
		Logoff Settings		I.7.36.2 Logoff Settings
	User/Account Common Setting	Logout Confirmation Screen Display Setting		I.7.37.1 Logout Confirmation Screen Display Setting
		Counter Remote Control		I.7.37.2 Counter Remote Control
	Scan to Home Settings			I.7.38 User Authentication/ Account Track-Scan to Home Settings
	Scan to Authorized Folder Settings			I.7.39 User Authentication/ Account Track-Scan to Authorized Folder Settings
	Print Simple Auth.	Authentication Setting		I.7.40.1 Authentication Setting
		Register Authentication Server		I.7.40.2 Register Authentication Server
	Max. Allowance when Enhanced Server down			I.7.41 User Authentication/ Account Track - Max. Allowance when Enhanced Server down

Administrator Settings		Ref. page
	Update Billing Information	I.7.42 User Authentication/ Account Track - Update Billing Information

(4) Network Settings

NOTE

- **Keys displayed on screens are different depending on the setting.**

Administrator Settings				Ref. page
Network Settings	TCP/IP Settings	IPv4 Settings		I.7.43.2 IPv4 Settings
		IPv6 Settings		I.7.43.3 IPv6 Settings
		DNS Host		I.7.43.4 DNS Host
		DNS Domain		I.7.43.5 DNS Domain
		DNS Server Settings (IPv4)		I.7.43.6 DNS Server Settings (IPv4)
		DNS Server Settings (IPv6)		I.7.43.7 DNS Server Settings (IPv6)
		IPsec Settings		I.7.43.8 IPsec Settings
		IP Filtering (Permit Access)		I.7.43.16 IP Filtering (Permit Access)
		IP Filtering (Deny Access)		I.7.43.17 IP Filtering (Deny Access)
		RAW Port Number		I.7.43.18 RAW Port Number
		LLMNR Setting		I.7.43.19 LLMNR Setting
	NetWare Settings	IPX Settings		I.7.44.1 IPX Settings
		NetWare Print Settings		I.7.44.2 NetWare Print Settings
		User Authentication Settings (NDS)		I.7.44.11 User Authentication Setting (NDS)
	HTTP Server Settings			I.7.45 Network Settings-HTTP Server Settings
	FTP Settings	FTP TX Settings		I.7.46.1 FTP TX Settings
		FTP Server Settings		I.7.46.6 FTP Server Settings
	SMB Settings	Client Settings		I.7.47.1 Client Settings
		SMB Server Settings		I.7.47.2 SMB Server Settings
		WINS/NetBIOS Settings		I.7.47.3 WINS/NetBIOS Settings
		Direct Hosting Settings		I.7.47.7 Direct Hosting Setting
	LDAP Settings	Enabling LDAP		I.7.48.1 Enabling LDAP
		Setting Up LDAP		I.7.48.2 Setting Up LDAP
		Default LDAP Server Settings		I.7.48.25 Default LDAP Server Setting
		Default Search Result Display Setting		I.7.48.26 Default Search Result Display Setting
	E-Mail Settings	E-Mail TX (SMTP)		I.7.49 Network Settings-E-Mail Settings-E-Mail TX (SMTP)
		E-Mail RX (POP)		I.7.50 Network Settings-E-Mail Settings-E-Mail RX (POP)
		E-Mail RX Print		I.7.51 Network Settings-E-Mail Settings-E-Mail RX Print
		S/MIME Communication Settings		I.7.52 Network Settings-E-Mail Settings-S/MIME Communication Settings
	SNMP Settings			I.7.53.1 SNMP Settings
	AppleTalk Settings			I.7.54 Network Settings-AppleTalk Settings
	Bonjour Setting			I.7.55 Network Settings-Bonjour Setting
	TCP Socket Settings	TCP Socket		I.7.56.1 TCP Socket
		TCP Socket (ASCII Mode)		I.7.56.2 TCP Socket (ASCII Mode)
	Network Fax Settings	Network Fax Function Settings	IP Address Fax Function	I.7.57.1.(1) IP Address Fax Function
			Internet Fax Function	I.7.57.1.(2) Internet Fax Function
		SMTP TX Settings		I.7.57.2 SMTP TX Settings
		SMTP RX Settings		I.7.57.3 SMTP RX Settings

Administrator Settings				Ref. page
	WebDAV Settings	WebDAV Client Settings		I.7.58 Network Settings-WebDAV Settings-WebDAV Client Settings
		WebDAV Server Settings		I.7.59 Network Settings-WebDAV Settings-WebDAV Server Settings
		Proxy Setting for Remote Access		I.7.60 Network Settings-WebDAV Settings-Proxy Setting for Remote Access
	DPWS Settings	DPWS Common Settings		I.7.61 Network Settings-DPWS Settings-DPWS Common Settings
		DPWS Extension Settings		I.7.62 DPWS Extension Settings
		Printer Settings		I.7.63 Network Settings-DPWS Settings-Printer Settings
		Scanner Settings		I.7.64 Network Settings-DPWS Settings-Scanner Settings
	Distributed Scan Settings			I.7.65.1 Distributed Scan Settings
	ThinPrint Setting			I.7.66 Network Settings-ThinPrint Setting
	Detail Settings	Device Setting		I.7.67 Network Settings-Detail Settings-Device Setting
		Time Adjustment Setting		I.7.68 Network Settings-Detail Settings-Time Adjustment Setting
		Status Notification Setting	Register Notification Address	I.7.69 Network Settings-Detail Settings-Status Notification Setting
		Total Counter Notification Settings		I.7.70 Network Settings-Detail Settings-Total Counter Notification Settings
		PING Confirmation		I.7.71 Network Settings-Detail Settings-PING Confirmation
		SLP Setting		I.7.72 Network Settings-Detail Settings-SLP Setting
		LPD Setting		I.7.73 Network Settings-Detail Settings-LPD Setting
		Prefix/Suffix Setting	ON/OFF Setting	I.7.74.1 ON/OFF Setting
			Prefix/Suffix Setting	I.7.74.2 Prefix/Suffix Setting
		Error Code Display Setting		I.7.75 Network Settings-Detail Settings-Error Code Display Setting
	IEEE802.1X Authentication Settings			I.7.76 Network Settings-IEEE802.1X Authentication Settings
	Web Browser Setting			I.7.77 Network Settings-Web Browser Setting
	Bluetooth Setting			I.7.78 Network Settings-Bluetooth Setting
	Single Sign-On Setting	Domain Login Setting		I.7.79.1 Domain Login Setting
		Applications and Settings		I.7.79.2 Applications and Settings
		Auto Log Out Time		I.7.79.3 Auto Log Out Time
	Extended Network Settings			I.7.80.1 Extended Network Settings
	IWS Settings			I.7.81.1 IWS Settings
	Remote Panel Settings	Server Settings		I.7.82.1 Server Settings
		Client Settings		I.7.82.2 Client Settings
	Machine Update Settings	Internet ISW Settings	Update Firmware at Specified Time	I.7.83.1.(1) Update Firmware at Specified Time
			FTP Server Settings	I.7.83.1.(2) FTP Server Settings
			Firmware Update Parameters	I.7.83.1.(3) Firmware Update Parameters
		Machine Auto Update setting	Auto Update Settings for This Machine	I.7.83.2.(1) Auto Update Settings for This Machine

Administrator Settings				Ref. page
			Relay Server Function Setting	I.7.83.2.(2) Relay Server Function Setting
			Log TX setting	I.7.83.2.(3) Log TX setting
			Log Confirmation	I.7.83.2.(4) Log Confirmation
			Manually Update	I.7.83.2.(5) Immediate Update
			Machine Update Password	I.7.83.2.(6) Machine Update Password
		HTTP Proxy Settings		I.7.83.3 HTTP Proxy Settings
	Tablet Settings			I.7.84 Network Settings-Tablet Settings

(5) Copier Settings

NOTE

- **Keys displayed on screens are different depending on the setting.**

Administrator Settings		Ref. page
Copier Settings	Auto Zoom (Platen)	I.7.85.1 Auto Zoom (Platen)
	Auto Zoom (ADF)	I.7.85.2 Auto Zoom (ADF)
	Specify Default Tray when APS Off	I.7.85.3 Specify Default Tray when APS Off
	Print Jobs During Copy Operation	I.7.85.4 Print Jobs During Copy Operation
	Tri-Fold Print Side	I.7.85.5 Tri-Fold Print Side
	Automatic Image Rotation	I.7.85.6 Automatic Image Rotation

(6) Printer Settings

NOTE

- **Keys displayed on screens are different depending on the setting.**

Administrator Settings		Ref. page
Printer Settings	USB Timeout	I.7.86.1 USB Timeout
	Network Timeout	I.7.86.2 Network Timeout
	Print XPS/OOXML Errors	I.7.86.3 Print XPS/OOXML Errors
	Assign Account to Acquire Device Info	I.7.86.4 Assign Account to Acquire Device Info

(7) Fax Settings

NOTE

- **Keys displayed on screens are different depending on the setting.**
- **It will be displayed only when the optional fax kit FK-511 is mounted.**

Administrator Settings			Ref. page
Fax Settings	Header Information		I.7.87.1 Header Information
	Header/Footer Position	Header Position	I.7.87.2.(1) Header Position
		TTI Print Position and Character Size	I.7.87.2.(2) TTI Print Position and Character Size
		Print Receiver's Name	I.7.87.2.(3) Print Receiver's Name
		Footer Position	I.7.87.2.(4) Footer Position
	Line Parameter Setting	Dialing Method	I.7.87.3.(1) Dialing Method
		Receive Mode	I.7.87.3.(2) Receive Mode
		Number of RX Call Rings (Receive Time Interval Setting)	I.7.87.3.(3) Number of RX Call Rings (Receive Time Interval Setting)
		Number of Redials	I.7.87.3.(4) Number of Redials
		Redial Interval	I.7.87.3.(5) Redial Interval
		Line Monitor Sound	I.7.87.3.(6) Line Monitor Sound
		Line Monitor Sound Volume (Send)	I.7.87.3.(7) Line Monitor Sound Volume (Send)
		Line Monitor Sound Volume (Receive)	I.7.87.3.(8) Line Monitor Sound Volume (Receive)
	TX/RX Settings	Duplex Print (RX)	I.7.87.4.(1) Duplex Print (RX)
		Letter/Ledger over A4/A3	I.7.87.4.(2) Letter/Ledger over A4/A3

Administrator Settings				Ref. page
		Print Paper Selection		I.7.87.4.(3) Print Paper Selection
		Print Paper Size		I.7.87.4.(4) Print Paper Size
		Incorrect User Box No. Entry		I.7.87.4.(5) Incorrect User Box No. Entry
		Tray Selection for RX Print		I.7.87.4.(6) Tray Selection for RX Print
		Min. Reduction for RX Print		I.7.87.4.(7) Min. Reduction for RX Print
		Print Separate Fax Pages		I.7.87.4.(8) Print Separate Fax Pages
		File After Polling TX		I.7.87.4.(9) File After Polling TX
		No. of Sets (RX)		I.7.87.4.(10) No. of Sets (RX)
		Individual Receiving Line Setup *1		I.7.87.4 TX/RX Settings
		Individual Sender Line Setup *1		I.7.87.4 TX/RX Settings
	Function Settings	Function ON/OFF Setting	F-Code TX	I.7.87.5.(1) F-Code TX
			Relay RX	I.7.87.5.(2) Relay RX
			Relay Printing	I.7.87.5.(3) Relay Printing
			Destination Check Display Function	I.7.87.5.(4) Destination Check Display Function
			Confirm Address (TX)	I.7.87.5.(5) Confirm Address (TX)
			Confirm Address (Register)	I.7.87.5.(6) Confirm Address (Register)
		Memory RX Setting		I.7.87.6 Function Settings-Memory RX Setting
		Closed Network RX		I.7.87.7 Function Settings-Closed Network RX
		Forward TX Setting		I.7.87.8 Function Settings-Forward TX Setting
		Incomplete TX Hold		I.7.87.9 Function Settings-Incomplete TX Hold
		PC-Fax Permission Setting		I.7.87.10 Function Settings-PC-Fax Permission Setting
		PC-Fax RX Setting		I.7.87.11 Function Settings-PC-Fax RX Setting
		TSI User Box Setting		I.7.87.12 Function Settings-TSI User Box Setting
		TSI All File Type Settings		I.7.87.13 Function Settings-TSI All File Type Settings
		TX-Line Auto Switch Setting		I.7.87.14 Function Settings-TX-Line Auto Switch Setting
	PBX Connection Setting			I.7.87.15 PBX Connection Setting
	Report Settings	Activity Report		I.7.87.16.(1) Activity Report
		TX Result Report		I.7.87.16.(2) TX Result Report
		Sequential TX Report		I.7.87.16.(3) Sequential TX Report
		Timer Reservation TX Report		I.7.87.16.(4) Timer Reservation TX Report
		Confidential RX Report		I.7.87.16.(5) Confidential RX Report
		Bulletin TX Report		I.7.87.16.(6) Bulletin TX Report
		Relay TX Result Report		I.7.87.16.(7) Relay TX Result Report
		Relay Request Report		I.7.87.16.(8) Relay Request Report
		PC-Fax TX Error Report		I.7.87.16.(9) PC-Fax TX Error Report
		Broadcast Result Report		I.7.87.16.(10) Broadcast Result Report
		TX Result Report Check		I.7.87.16.(11) TX Result Report Check
		Network Fax RX Error Report		I.7.87.16.(12) Network Fax RX Error Report
		Print Job Number		I.7.87.16.(13) Print Job Number
		MDN Message		I.7.87.16.(14) MDN Message

Administrator Settings					Ref. page
		DSN Message			I.7.87.16.(15) DSN Message
		Print E-mail Message Body			I.7.87.16.(16) Print E-mail Message Body
	Job Settings List				I.7.87.17 Job Settings List
	Multi Line Settings *1	PC-Fax TX Line Setting			I.7.87.11 Function Settings-PC-Fax RX Setting
		Fax Line 2/ Fax Line 3/ Fax Line 4 *2	Line Parameter Setting	Dialing Method	I.7.87.19.(1) Dialing Method
				Number of RX Call Rings(Receive Time Interval Setting)	I.7.87.19.(2) Number of Rx Call Rings (Receive Time Interval Setting)
				Line Monitor Sound	I.7.87.19.(3) Line Monitor Sound
			Function Setting		I.7.87.20 Multi Line Settings-Fax Line 2 to 4-Function Settings
			Multi Line Setting		I.7.87.21 Multi Line Settings-Fax Line 2 to 4-Multi Line Settings
			Sender Fax No.		I.7.87.22 Multi Line Settings-Fax Line 2 to 4-Sender Fax No.
	Network Fax Settings	Black Compression Level			I.7.87.23 Network Fax Settings-Internet Fax Self Rx Ability
		Color/Grayscale Multi-Value Compression Method			I.7.87.24 Network Fax Settings-Internet Fax Advanced Settings
		Internet Fax Self Rx Ability			I.7.87.23 Network Fax Settings-Internet Fax Self Rx Ability
		Internet Fax Advanced Settings			I.7.87.24 Network Fax Settings-Internet Fax Advanced Settings
		IP Address Fax Operation Settings			I.7.87.25 Network Fax Settings-IP Address Fax Operation Settings
	Fax Print Quality Settings				I.7.87.26 Fax Print Quality Settings

- *1: It will be displayed only when the optional fax kit FK-511 (line 2) or FK-508 (line 3 or line 4) is mounted.
- *2: It will be displayed each only when the optional fax kit FK-511 (line 2) or FK-508 (line 3 or line 4) is mounted.

(8) System Connection

NOTE

- **Keys displayed on screens are different depending on the setting.**

Administrator Settings			Ref. page
System Connection	OpenAPI Settings	Access Setting	I.7.88.1 OpenAPI Settings-Access Setting
		SSL/Port Settings	I.7.88.2 OpenAPI Settings-SSL/Port Settings
		Authentication	I.7.88.3 OpenAPI Settings-Authentication
		External Application Connection	I.7.88.4 OpenAPI Settings-External Application Connection
		Proxy Settings	I.7.88.5 OpenAPI Settings-Proxy Settings
		Specified Application Start Setting	I.7.88.6 OpenAPI Settings-Specified Application Start Setting
	Call Remote Center		I.7.88.7 Call Remote Center
	Prefix/Suffix Automatic Setting		I.7.88.8 Prefix/Suffix Automatic Setting
	Printer Information		I.7.88.9 Printer Information
	Cellular Phone/PDA Setting		I.7.88.10 Cellular Phone/PDA Setting

(9) Security Settings

NOTE

- **Keys displayed on screens are different depending on the setting.**

Administrator Settings		Ref. page
Security Settings	Administrator Password	I.7.89 Security Settings-Administrator Password
	User Box Administrator Setting	I.7.90 Security Settings-User Box Administrator Setting

Administrator Settings			Ref. page
	Administrator Security Levels		I.7.91 Security Settings-Administrator Security Levels
	Security Details	Password Rules	I.7.92.1 Password Rules
		Prohibited Functions When Authentication Error	I.7.92.2 Prohibited Functions When Authentication Error
		Confidential Document Access Method	I.7.92.3 Confidential Document Access Method
		Manual Destination Input	I.7.92.4 Manual Destination Input
		Print Data Capture	I.7.92.5 Print Data Capture
		Job Log Settings	I.7.92.6 Job Log Settings
		Restrict Fax TX	I.7.92.7 Restrict Fax TX
		Personal Data Security Settings	I.7.92.8 Personal Data Security Settings
		Hide Personal Information (MIB)	I.7.92.9 Hide Personal Information (MIB)
		Display Activity Log	I.7.92.10 Display Activity Log
		Initialize	I.7.92.11 Initialize
		Secure Print Only	I.7.92.12 Secure Print Only
		Copy Guard	I.7.92.13 Copy Guard
		Password Copy	I.7.92.14 Password Copy
		Web browser contents access	I.7.92.15 Web browser contents access
		TX Operation Log	I.7.92.16 TX Operation Log
		Hardware Encryption	I.7.92.17 Hardware Encryption
		Export Debug Log	I.7.92.18 Export Debug Log
		Write the Configuration from USB	I.7.92.19 Write the Configuration from USB
		HDD backup data Settings.	I.7.92.20 HDD backup data Settings.
	Enhanced Security Mode		I.7.93 Security Settings-Enhanced Security Mode
	HDD Settings	Check HDD Capacity	I.7.94.1 Check HDD Capacity
		Overwrite HDD Data	I.7.94.2 Overwrite HDD Data
		Overwrite All Data	I.7.94.3 Overwrite All Data
		HDD Lock Password	I.7.94.4 HDD Lock Password
		Format HDD	I.7.94.5 Format HDD
		HDD Encryption Setting	I.7.94.6 HDD Encryption Setting
		Debug Log Encryption Settings	I.7.94.7 Debug Log Encryption Settings
	Function Management Settings	Usage Setting for Each Function	I.7.95.1 Usage Settings for Each Function
		Maximum Job Allowance	I.7.95.2 Maximum Job Allowance
		Network Function Usage Settings	I.7.95.3 Network Function Usage Settings
	Stamp Settings	Apply Stamps	I.7.96.1 Apply Stamps
		Delete Registered Stamp	I.7.96.2 Delete Registered Stamp
	Image Log Transfer Settings		I.7.97.1 Image Log Transfer Settings
	Driver Password Encryption Setting		I.7.98 Security Settings-Driver Password Encryption Setting
	FIPS Settings		I.7.99.1 FIPS Settings

(10) Other Settings

NOTE

- **Keys displayed on screens are different depending on the setting.**

Administrator Settings		Ref. page
License Settings	Get Request Code	I.7.100.1 Get Request Code
	Install License	I.7.100.2 Install License
	List of Enabled Functions	I.7.100.3 List of Enabled Functions
Voice Guidance Settings	Voice Guidance	I.7.101 Voice Guidance Settings-Voice Guidance

Administrator Settings		Ref. page
OpenAPI Certification Management Setting	Restriction Code Settings	I.7.102 OpenAPI Certification Management Setting
External Memory Backup	Import/Export	I.7.103.1 Import/Export
Remote Access Setting	Import/Export User Data	I.7.104.1 Import/Export User Data

4.2.4 Other Settings

(1) Check Consumable Life

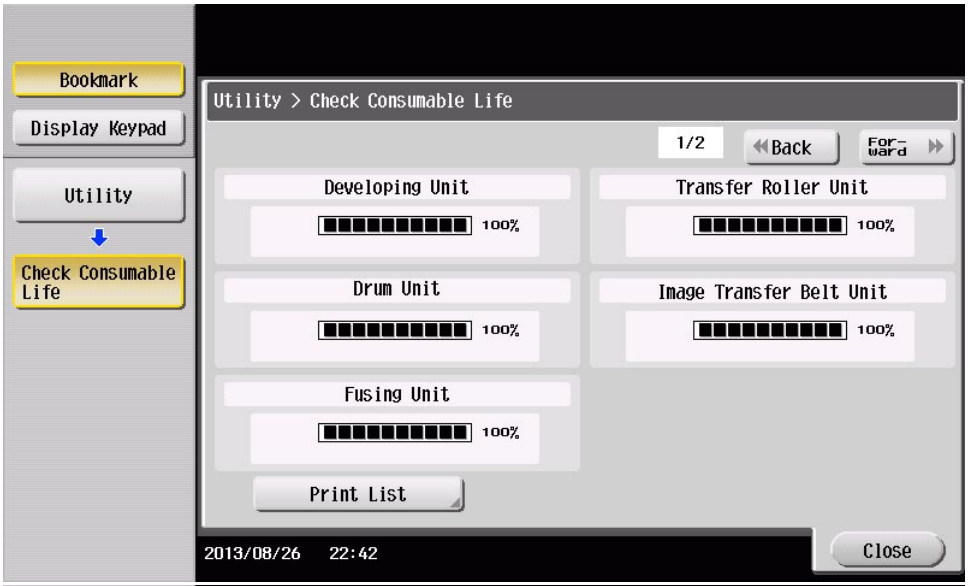



NOTE

- **Keys displayed on screens are different depending on the setting.**

Other Settings	Ref. page
Check Consumable Life	-

(2) Banner Printing

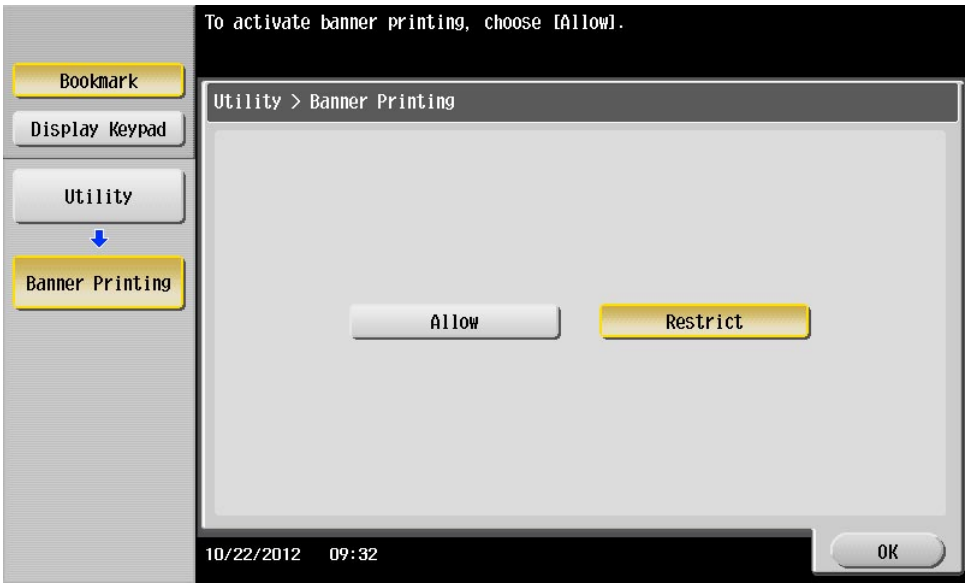

NOTE

- **Keys displayed on screens are different depending on the setting.**

Other Settings	Ref. page
Banner Printing	I.8.1 Banner Printing

(3) My Panel Settings

NOTE

- **Keys displayed on screens are different depending on the setting.**

Other Settings		Ref. page
My Panel Settings	Language Setting	I.8.2 My Panel Settings
	Measurement Unit Settings	
	Copier Settings	
	Scan/Fax Settings	
	User Box Settings	
	Color Selection Setting	
	Main Menu Settings	
	Initial Screen Settings	

(4) Device Information

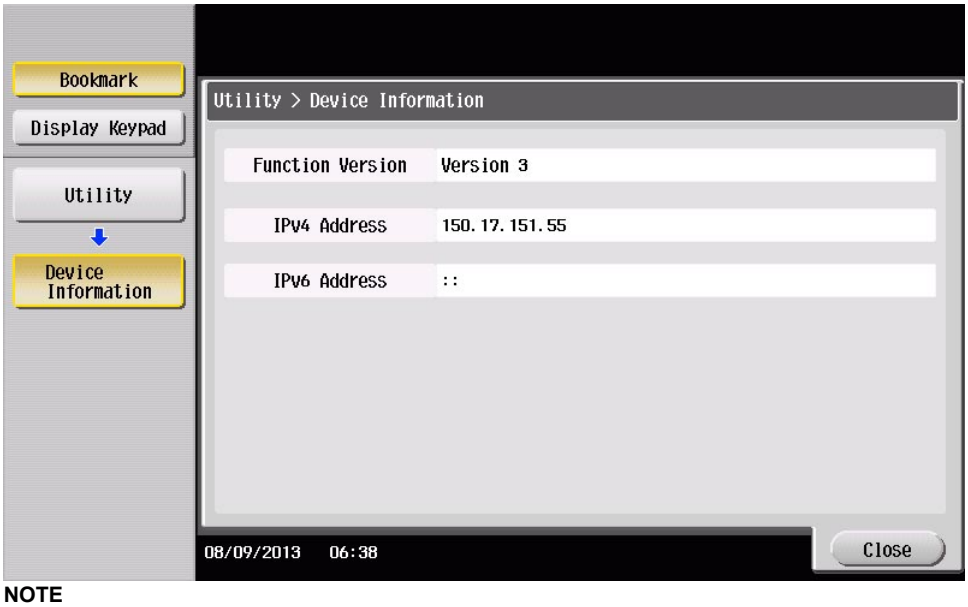

NOTE

- **Keys displayed on screens are different depending on the setting.**

Other Settings	Ref. page
Device Information	I.8.3 Device Information

(5) Remote Panel Operation

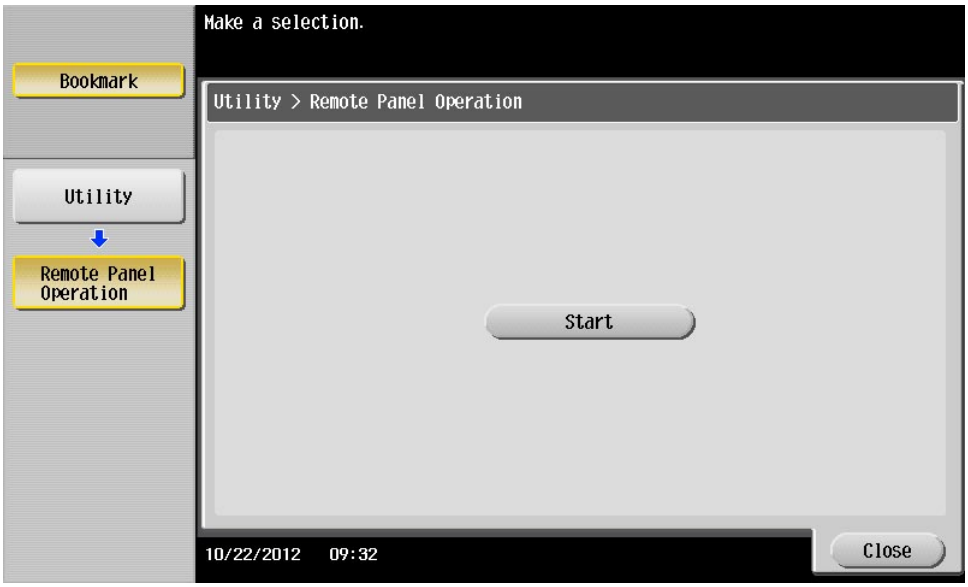

NOTE

- **Keys displayed on screens are different depending on the setting.**

Other Settings	Ref. page
Remote Panel Operation	I.8.4 Remote Panel Operation

4.3 Starting/Exiting

4.3.1 Starting procedure

1. Touch Menu.
2. Touch [Utility].
3. The Utility Mode screen will appear.

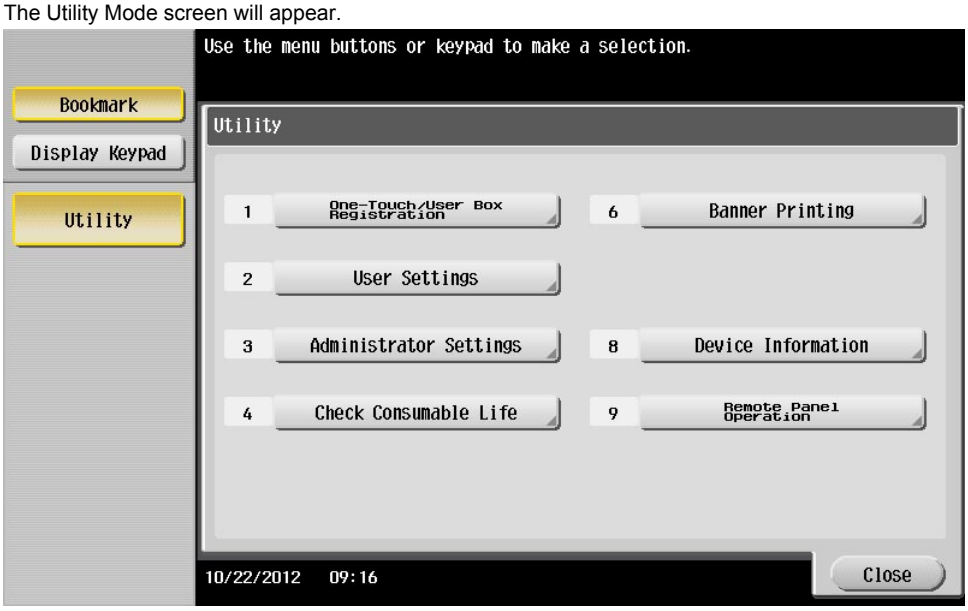

4.3.2 Exiting procedure

1. Touch the [Close] key.

5. UTILITY (ONE-TOUCH/USER BOX REGISTRATION)

One-Touch User Box Registration-Outline

- In a copier where the user authentication function that uses an external server or MFP is set to ON, when you operate the copier without performing user authentication, this menu is not displayed.
- It will not be displayed when the following setting shows that authentication device 2 is mounted.
  [Service Mode] -> [Billing Setting] -> [Management Function Choice]

5.1 Create One-Touch Destination

5.1.1 Address Book (Public)/(Personal)

(1) E-Mail

(a) Use

- To register/change e-mail address to send scanned data.

(b) Procedure

- A new address can be registered by touching [New].
- Select any displayed address to check, edit or delete the setting.

(2) User Box

- It will not be displayed when the following setting shows that authentication device 2 or the vendor 2 is mounted.
  [Service Mode] -> [Billing Setting] -> [Management Function Choice]
  (It will be displayed when the key counter is mounted.)

(a) Use

- To register/change the Box address when storing the scanned data in the box in the hard disk in the main body.

(b) Procedure

- A new address can be registered by touching [New].
- Select any displayed address to check, edit or delete the setting.
- At least one User Box must be registered for registering a Box address.

(3) Fax

(a) Use

- To register/change the fax destinations.

(b) Procedure

- A new address can be registered by touching [New].
- Select any displayed address to check, edit or delete the setting.

(4) PC (SMB)

(a) Use

- To register/change SMB address to send scanned data.

(b) Procedure

- A new address can be registered by touching [New].
- Select any displayed address to check, edit or delete the setting.

(5) FTP

(a) Use

- To register/change FTP address to send scanned data.

(b) Procedure

- A new address can be registered by touching [New].
- Select any displayed address to check, edit or delete the setting.

(6) WebDAV

(a) Use

- To register/change WebDAV address to send scanned data.

(b) Procedure

- A new address can be registered by touching [New].
- Select any displayed address to check, edit or delete the setting.

(7) IP Address Fax

- Setting will be available only when [IP Address Fax Function] is set to “ON” in the following settings.
  [Administrator Settings] -> [Network Settings] -> [Network Fax Settings] -> [Network Fax Function Settings]

(a) Use

- To register/change the IP address fax destination when transmitting the IP address fax data.

(b) Procedure

- A new address can be registered by touching [New].
- Select any displayed address to check, change or delete the setting.

(8) Internet Fax

- Setting will be available only when [Internet Fax Function] is set to “ON” in the following settings.
  [Administrator Settings] -> [Network Settings] -> [Network Fax Settings] -> [Network Fax Function Settings]

(a) Use

- To register/change the Internet fax address when transmitting the internet fax data.

(b) Procedure

- A new address can be registered by touching [New].
- Select any displayed address to check, change or delete the setting.

5.1.2 Group

(1) Use

- To register/change a group to send scanned data/fax data simultaneously.

(2) Procedure

- A new address can be registered by touching [New].
- Select any displayed group to check, edit or delete them.
- At least one address must be registered for registering a new group.

5.1.3 E-Mail Settings

- It will not be displayed when the following setting shows that the management device 2 is mounted.
  [Service Mode] -> [Billing Setting] -> [Management Function Choice]

(1) E-Mail Subject

(a) Use

- To register the e-mail subject when transmitting the scanned data.

(b) Procedure

- A new address can be registered by touching [New].
- Select any displayed address to detail check, edit or delete the setting.
- The subject can be set as default by selecting the subject displayed on the screen and pressing [Set as Default].

(2) E-mail Body

(a) Use

- To register the e-mail message when transmitting the scanned data.

(b) Procedure

- A new address can be registered by touching [New].
- Select any displayed address to detail check or delete the setting.
- The text can be set as default by selecting the text displayed on the screen and pressing [Set as Default].

5.2 Create User Box

- It will not be displayed when the following setting shows that the vendor 2 is mounted.
  [Service Mode] -> [Billing Setting] -> [Management Function Choice]
  (It will be displayed when the key counter is mounted.)
- It will not be displayed due to functional restriction upon user authentication when [User Box] is set to “Restrict.”
- It will not be displayed when [Allow/Restrict User Box] is set to “Prohibit” in the following settings.
  [Administrator Settings] -> [System Settings] -> [User Box Settings]

5.2.1 Public/Personal User Box

(1) Use

- To register/change the box for storing text data in the hard disk of the machine.
- Shared or personal box can be registered according to its intended use.

(2) Procedure

- A new box can be registered by touching [New].
- Select any displayed box to change or delete it.

5.2.2 Bulletin Board User Box

- It will not be displayed when the following setting shows that the vendor 2 is mounted.
  [Service Mode] -> [Billing Setting] -> [Management Function Choice]
  (It will be displayed when the key counter is mounted.)
- It will not be displayed due to functional restriction upon user authentication when [User Box] is set to “Restrict.”
- It will be displayed only when the optional fax kit FK-511 is mounted.
- It will not be displayed due to functional restriction upon user authentication when [Fax] is set to “Restrict.”

(1) Use

- To register/change the bulletin board user box.

(2) Procedure

- A new box can be registered by touching [New].
- Select any displayed box to change or delete it.

5.2.3 Relay User Box

- It will not be displayed when the following setting shows that the vendor 2 is mounted.
  [Service Mode] -> [Billing Setting] -> [Management Function Choice]
  (It will be displayed when the key counter is mounted.)
- It will not be displayed due to functional restriction upon user authentication when [User Box] is set to “Restrict.”
- It will be displayed only when the optional FAX kit FK-511 is mounted.
- It will be displayed when the following setting is set to “ON.”
  [Service Mode] -> [FAX] -> [System] -> [Display Setting] -> [Relay]

(1) Use

- To register/change the Relay User Box.

(2) Procedure

- A new box can be registered by touching [New].
- Select any displayed box to change or delete it.

5.3 Limiting Access to Destinations

- It will not be displayed when the following setting is set to “ON.”
  [Administrator Settings] -> [Security Settings] -> [Enhanced Security Mode]

(1) Outline

- The Limiting Access to Destinations setting allows or restricts individual user’s access to each destination. This enables security control by restricting information that can be accessed.

(a) Apply Levels

- One of the six levels from 0 to 5 can be assigned to all destinations. Similarly, one of the levels from 0 to 5 can be assigned to all users. Depending on the combination of the destination and user levels, destinations that a user can access can be limited.
  For example, users of level 2 can access the destinations that belong to the levels 0 to 2, but cannot access to the destinations that belong to the levels 3 to 5. Level 5 users can access all destinations of the levels 0 to 5.

(b) Groups

- A group can be made with a certain name to allow its members to access its destinations. Users and destinations can be registered for the group so that the registered destinations can be accessed by the registered users.
  Access restriction depending on an individual level is also applied to the group with access to the destinations determined by the combination of the user and destination levels within a group.
- A destination can be included in only one group.
- A user can be included in multiple different groups.

5.3.1 Apply Levels/Groups to Destinations

(1) Address Book

(a) Use

- Sets a level and a group for destinations registered in the address book.

(b) Procedure

- Select a destination, press [Apply Level] or [Apply Group] and make a setting.

(2) Group

(a) Use

- Sets a level and a group for destinations registered in the group.

(b) Procedure

- Select a destination, press [Apply Level] or [Apply Group] and make a setting.

(3) Program

(a) Use

- Sets a level and a group for destinations registered in the program.

(b) Procedure

- Select a destination, press [Apply Level] or [Apply Group] and make a setting.

6. UTILITY (USER SETTINGS)

6.1 System Settings

6.1.1 Language Selection

(1) Use

- To select the language on the LCD display.
- To change the language used on the control panel.

(2) Procedure

- The language as a default depend on the marketing area selected in [Marketing Area] available from [System 1] under Service Mode. I.11.14.1 Marketing Area

6.1.2 Language Selection-Panel Keyboard Language Selection

(1) Use

- To set the language used in the keyboard displayed within the panel.
- When using the keyboard language different from the panel display language, you can select from the 9 basic languages.

(2) Default setting

- Panel Display Language Synchronize

(3) Setting item

- “Panel Display Language Synchronize”
- Panel Display Language Desynchronize

6.1.3 Language Selection-External Keyboard Language Selection

(1) Use

- To set the language used in the external keyboard.
- Selecting [Panel Display Language Desynchronize] allows you to select an external keyboard language regardless of the setting of the panel display language.

(2) Default setting

- Panel Display Language Desynchronize

(3) Setting item

- Panel Display Language Synchronize
- “Panel Display Language Desynchronize”

6.1.4 Select Keyboard

(1) Use

- Select the keyboard type displayed by default in the touch panel.
- The type of keyboard to be displayed when [Local Keyboard] is selected depends on the language selected in [User Settings] -> [System Settings] -> [Language Selection].
- The type of keyboard corresponding to each language is shown below.

Language	Keyboard
Japanese	Standard keyboard (JIS) + Local keyboard (Japanese)
English (US) *	Standard keyboard (US ASCII) only
English (UK) *	Standard keyboard (US ASCII) + Local keyboard (UK)
French	Standard keyboard (US ASCII) + Local keyboard (French)
Italian	Standard keyboard (US ASCII) + Local keyboard (Italian)
German	Standard keyboard (US ASCII) + Local keyboard (German)
Spanish	Standard keyboard (US ASCII) + Local keyboard (Spanish)
Simplified Chinese	Standard keyboard (JIS) + Local keyboard (Simplified Chinese)
Traditional Chinese	Standard keyboard (JIS) + Local keyboard (Traditional Chinese)
Korean	Standard keyboard (JIS) + Local keyboard (Korean)

- *: If [Marketing Area] is set to Europe and [Language Selection] is set to English, English (UK) takes effect. If another marketing area and English are selected, English (US) takes effect.

(2) Setting item

- Standard Keyboard
- Local keyboard

NOTE

- **The language options depend on the marketing area selected in [Marketing Area] available from [System 1] under Service Mode. I.11.14.1 Marketing Area**

6.1.5 Measurement Unit Settings

(1) Use

- To select the unit displayed on the LCD display.

(2) Default setting

- The default setting varies depending on the marketing area.

(3) Setting item

- mm (Numerical Value)
- inch (Numerical Value)
- inch (Fraction)

6.1.6 Paper Tray Settings

(1) Auto Tray Selection Settings

(a) Use

- To set the tray for automatic selection when APS is being set.
- To establish the priority for switching the tray when ATS is being set.

(b) Procedure

- Select the tray on the [Auto Tray Select] screen.
- Set the priority on the [Tray Priority] screen.

(2) Auto Tray Selection Settings - Auto Paper Selection Setting

(a) Use

- If [Auto] is selected for [Paper], you can also specify the trays loaded with [Thin Paper], [User Paper 1], and [User Paper 2] for target trays.

(b) Procedure

- Select target paper for auto paper selection, and specify the priority order.

(3) Auto Tray Switch ON/OFF

(a) Use

- To set whether to automatically switch to another tray which is meeting the following conditions when the paper feed tray runs out of paper during printing.
  Operating conditions
  - The paper is the same size.
  - The paper is positioned in the same orientation.
  - The paper is the same type.
  - The paper trays are selected when the paper tray is automatically switched.

(b) Default setting

- Restrict

(c) Setting item

- Allow
- “Restrict”

(4) No Matching Paper in Tray Setting

(a) Use

- When the paper in the specified paper feed tray runs out of paper during printing, to select another paper feed tray loaded with paper of the same size as that loaded in the specified paper feed tray, the setting being Switch Trays (Tray Priority) or Stop Printing (Tray Fixed).

Stop Printing (Tray Fixed)	It stops printing when the specified tray runs out of paper.
Switch Trays (Tray Priority)	To switch to another tray with the specified paper and print when the tray is out of paper.

(b) Default setting

- Stop Printing (Tray Fixed)

(c) Setting item

- “Stop Printing (Tray Fixed)”
- Switch Trays (Tray Priority)

(5) Print Lists

- It will not be displayed when the following setting shows that authentication device 2 or the vendor 2 is mounted.
  [Service Mode] -> [Billing Setting] -> [Management Function Choice]
  (It will be displayed when the key counter is mounted.)

(a) Use

- To set the sales counter, the paper feed tray when outputting the unit check list, and the default for the printing method (simplex/duplex).

(b) Default setting

- Paper Tray: Tray 1
- Simplex/Duplex: 1-Sided

6.1.7 Auto Color Level Adjust.

(1) Use

- To set the criterion level to discriminate between a colored original and a black-and-white original in the auto color mode (when scanning).

(2) Default setting

- 3

(3) Setting item

- 1 (Black) to 5 (Full Color)

6.1.8 Power Supply/Power Save Settings

- It will be displayed only when the following setting is set to “Level 1” or “Level 2.”
  [Administrator Settings] -> [Security Setting] -> [Administrator Security Levels]
- It will not be displayed when the following setting shows that the vendor 2 is mounted.
  [Service Mode] -> [Billing Setting] -> [Management Function Choice]

(1) Low Power Mode Settings

(a) Use

- To set the time until low power starts operating after the last key operation has been completed.
- Low power: To turn LED and LCD OFF, and lower the power consumption.

(b) Procedure

- Use the 10-key pad for setting.

(c) Default setting

- 15 min.
- When the marketing area setting is set to “Japan” or “Others3”, the default setting is 1 min.

(d) Setting range

- 2 min. to 60 min.
- The upper limit can be set up to 240 min. only when the switch number “157” is specified to “02” with HEX by configuring the following settings.
  [Service Mode] -> [System 2] -> [Software Switch Setting]

(2) Sleep Mode Settings

(a) Use

- To set the time until sleep mode starts operating after the last key operation has been completed.
- Turn all lines OFF except 5 V line for control.
- “No” will only be displayed when [Sleep ON/OFF Choice Setting] in Service Mode is set.

(b) Procedure

- Use the 10-key pad for setting.

(c) Default setting

- 20 min.
- When the marketing area setting is set to “Japan” or “Others3”, the default setting is 1 min.

(d) Setting item

- 2 min. to 60 min.
- No
- The upper limit can be set up to 240 min. only when the switch number “157” is specified to “02” with HEX by configuring the following settings.
  [Service Mode] -> [System 2] -> [Software Switch Setting]

6.1.9 Output Settings

- It will be displayed only when the following setting is set to “Level 2.”
  [Administrator Settings] -> [Security Settings] -> [Administrator Security Levels]
- It will not be displayed when the following setting shows that the vendor 2 is mounted.
  [Service Mode] -> [Billing Setting] -> [Management Function Choice]

(It will be displayed when the key counter is mounted.)

(1) Print/Fax Output Settings

(a) Use

- To set the timing for printing for the PC print job or fax received.

Batch Print	Starts printing when all data are received.
Page Print	Starts printing every time data for each page are received.

(b) Default setting

- Print: Page Print
- Fax: Batch Print

NOTE

- **[Fax] will be displayed only when the optional fax kit FK-511 is mounted.**

(2) Output Tray Settings

- It will be displayed when the optional finisher FS-534 or job separator JS-506 is mounted.

(a) Use

- To set the priority output tray for each application (Copy print, Printer, Fax and Print Reports).

(b) Default setting

- Copy: Tray 2
- Print: Tray 2
- Print Reports: Tray 1
- Fax: Tray 1

6.1.10 AE Level Adjustment

- It will be displayed only when the following setting is set to “Level 2.”
  [Administrator Settings] -> [Security Settings] -> [Administrator Security Levels]
- It will not be displayed when the following setting shows that the vendor 2 is mounted.
  [Service Mode] -> [Billing Setting] -> [Management Function Choice]
  (It will be displayed when the key counter is mounted.)

(1) Use

- To set the default setting for AE (Auto Exposure).
  The larger the value becomes the more emphasized the background will be.
  - To make the background level foggier: Increase the setting value
  - To make the background level less foggy: Decrease the setting value

(2) Default setting

- 2

(3) Setting range

- 0 to 4

6.1.11 Auto Paper Select for Small Original

(1) Use

- To make the copy setting when the paper is undetectably small, or no original is being set.
- To copy the original such as business cards with which the original detection is not effective.

Copy on Small Size	Copies on A5 paper.
Copy on A4/Letter	Copies on A4 or Letter (8 $^{1}/_{2}$ x 11) size paper.
Prohibit Copy	Does not copy since the original size cannot be detected. Paper feed tray needs to be selected prior to pressing the Start key.

(2) Default setting

- Prohibit Copy

(3) Setting item

- Copy on Small Size
- Copy on A4/Letter
- “Prohibit Copy”

6.1.12 Blank Page Print Settings

- It will be displayed only when the following setting is set to “Level 2.”
  [Administrator Settings] -> [Security Settings] -> [Administrator Security Levels]
- It will not be displayed when the following setting shows that vendor 2 is mounted.

[Service Mode] -> [Billing Setting] -> [Management Function Choice]

(1) Use

- Select whether or not to print the stamp/composition on blank pages.

(2) Default setting

- Do Not Print

(3) Setting item

- Print
- "Do Not Print"

6.1.13 Page Number Print Position

- It will be displayed only when the following setting is set to "Level 2."
  [Administrator Settings] -> [Security Settings] -> [Administrator Security Levels]

(1) Use

- Specify a page number print position when printing page numbers after configuring 2-sided print or booklet settings. Select whether to print the page numbers on a same position on all pages or on positions symmetric with respect to the stapling position.

(2) Default setting

- Left & Right Bind: All the Same/Top & Bottom Bind: All the Same

(3) Setting item

- "Left & Right Bind: All the Same/Top & Bottom Bind: All the Same"
- Left & Right Bind: Symmetrical/Top & Bottom Bind: All the Same
- Left & Right Bind: Symmetrical/Top & Bottom Bind: Symmetrical

6.1.14 Blank Sheet Detection Level

(1) Use

- To adjust the level to detect blank sheet pages when blank sheet pages are included in the originals set in ADF.
- Adjusting the level to the "+" side increases the possibility of originals being judged as blank.
- Adjusting the level to the "-" side decreases the possibility of originals being judged as blank.
- Note that light originals or originals with large white areas tend to be judged as blank sheet when the level is adjusted to the "+" side.

(2) Default setting

- 0

(3) Setting range

- -2 to +2

6.1.15 Separate Scan from Platen

(1) Use

- To select whether to set normally continuous scan when scanning the original on the platen glass.

(2) Default setting

- No

(3) Setting range

- Yes
- "No"

6.2 Custom Display Settings

6.2.1 Copier Settings

(1) Default Tab

(a) Use

- Selects a default tab display in the copy mode.

Basic	Normal basic screen
Quick Copy	• This screen displays all options that can be selected for Paper, Zoom, and Duplex/Combine functions. • The normal [Basic] screen is also displayed as another tab on the screen.

(b) Default setting

- Basic

(c) Setting item

- "Basic"
- Quick Copy

(2) Quick Settings 1, 2

(a) Use

- Allows you to register setting conditions for frequently used copy functions and place them on the basic settings screen.
- The registered setting condition can be invoked by only pressing the corresponding easy setting key.

(b) Default setting

- OFF

(c) Setting item

- ON
- "OFF"

NOTE

- **When this setting is set to ON, select the copy functions you wish to register.**

6.2.2 Scan/Fax Settings

(1) Default Tab

(a) Use

- To set the basic screen display in scan/fax mode.

(b) Default setting

- Address Book

(c) Setting item

- Address Search/LDAP Search
- Job History
- "Address Book"
- Direct Input

(2) Program Default

(a) Use

- To set the default display for the program screen during scan/fax mode.
- To keep the default display on the program screen which frequently changes during scan/fax mode.

(b) Default setting

- PAGE 1

(c) Setting item

- Temporary One-Touch
- "PAGE1" to PAGE34

(3) Address Book Index Default-Index

(a) Use

- To set the default display for the address book screen during scan/fax mode.
- To keep the default display instead of search string on the address book which frequently changes during scan/fax mode.

(b) Default setting

- Favorites

(c) Setting item

- "Favorites"
- All
- ABC to WXYZ
- etc

(4) Address Book Index Default-Address Type

(a) Use

- To set the default display of the address book screen in scan/fax mode.
- To select the type(s) of address frequently used to add it to the default display of the Address Book screen in scan/fax mode.

(b) Default setting

- All

(c) Setting item

- Group
- Fax
- E-Mail
- Box
- I-Fax
- IP Ad. Fax
- PC (SMB)
- FTP
- WebDAV
- "All"

(5) Default Address Sort Method

(a) Use

- To set the order in which addresses are displayed in the scan/fax screen.

(b) Default setting

- Number Order

(c) Setting item

- "Number Order"
- Name Order

(6) Default Address Display Method

(a) Use

- To set the type of layout used in the scan/fax screen.

(b) Default setting

- One-Touch Button Layout

(c) Setting item

- "One-Touch Button Layout"
- List Layout

6.2.3 User Box Settings

(1) Default Tab

(a) Use

- Selects a default tab display in the user box mode.

(b) Default setting

- Public

(c) Setting item

- "Public"
- Group
- Personal
- System

(2) Shortcut Key 1/2

(a) Use

- Selects whether to use the shortcut key.
- Adds the shortcut keys of frequently used user box functions to the basic screen.

(b) Default setting

- OFF

(c) Setting item

- ON
- "OFF"

NOTE

- **When this setting is set to ON, select auxiliary functions to get their shortcut keys displayed on the screen.**

6.2.4 Function Display Key (Copy/Print)

- This is not displayed when [Administrator Settings] -> [System Settings] -> [Custom Display Settings] -> [Function Display Key Permission Setting] -> [Copy/Print] is set to "Restrict."

(1) Default Tab

(a) Use

- To set the display pattern of the function keys that appear in the print settings screen in copy and User Box mode.

(b) Procedure

- Select a function key number to be reconfigured. ([Function Key 1] to [Function Key 7] are assigned to [Function 1], and [Function Key 8] to [Function Key 14] are assigned to [Function 2]).
- Touch [ON], select a function to be assigned to a function key, then touch [OK].
- This changes the function keys displayed in the main screen.

6.2.5 Function Display Key (Send/Save)

- This is not displayed when [Administrator Settings] -> [System Settings] -> [Custom Display Settings] -> [Function Display Key Permission Setting] -> [Send/Save] is set to “Restrict.”

(1) Default Tab

(a) Use

- To set the display pattern of the function keys that appear in the send or save settings screen in scan/fax and User Box mode.

(b) Procedure

- Select a function key number to be reconfigured.
- Touch [ON], select a function to be assigned to a function key, then touch [OK].
- This changes the function keys displayed in the main screen.

6.2.6 Default Application Screen Type Setting

(1) Use

- Set the default value to display the [Application] screen in each mode.

(2) Default setting

- Mapscroller

(3) Setting item

- “Mapscroller”
- Tab

6.2.7 Copy Screen

- It will not be displayed when the following setting shows that key counter or vendor 2 is mounted.
  [Service Mode] -> [Billing Setting] -> [Management Function Choice]
  However, this menu is available when the key counter is installed and [The next job reservation] is set to License.
  [Service Mode] -> [Billing Setting] -> [Management Function Choice]

(1) Copy Operating Screen

(a) Use

- To set the display on the control panel screen during printing.

Yes	The screen shows that the printing is being carried out. The job can be reserved with [Program Next Job].
No	The screen does not indicate the printing being carried out. The normal copy setting screen will be displayed. The copy reservation is available.

(b) Default setting

- No

(c) Setting item

- Yes
- “No”

6.2.8 Fax Active Screen

- It will be displayed only when the optional fax kit FK-511 is mounted.
- It will not be displayed when the following setting shows that key counter or vendor 2 is mounted.
  [Service Mode] -> [Billing Setting] -> [Management Function Choice]

(1) TX Display

(a) Use

- To set the screen display for the control panel when transmitting fax.

(b) Default setting

- No

(c) Setting item

- Yes
- "No"

(2) RX Display

(a) Use

- To set the screen display on the control panel when receiving fax.

(b) Default setting

- No

(c) Setting item

- Yes
- "No"

6.2.9 Animation Settings

(1) When Pop-up Opens

(a) Use

- To set whether to display in animation view when opening a pop-up window.

(b) Default setting

- Yes

(c) Setting item

- "Yes"
- No

(2) When Pop-up Closes

(a) Use

- To set whether to display in animation view when closing a pop-up window.

(b) Default setting

- Yes

(c) Setting item

- "Yes"
- No

6.2.10 Search Option Settings

(1) Uppercase and Lowercase Letters

(a) Use

- Select whether or not to differentiate between upper case and lowercase letters.

(b) Default setting

- Differentiate

(c) Setting item

- "Differentiate"
- Do Not Differentiate

(2) Search Option Screen

(a) Use

- Select whether or not to display [Uppercase and Lowercase Letters] setting in the advanced search.
- Displaying the search option screen allows changing the search criteria for an individual search.

(b) Default setting

- OFF

(c) Setting item

- ON
- "OFF"

6.3 Copier Settings

6.3.1 Auto Booklet Selection for Saddle Stitching

- It will be displayed only when the optional saddle stitcher SD-511 is installed in the finisher FS-534.

(1) Use

- To set whether to set the auto booklet when Center Staple & Fold / Half-Hold is selected

Auto Select Booklet	Automatically selects Booklet when a user selects Center Staple & Fold or Half-Hold.
User Defined	Asks a user whether or not to select Booklet each time when a user selects Center Staple & Fold or Half-Hold.
Off	Does not select Booklet when a user selects Center Staple & Fold or Half-Hold.

(2) Default setting

- Auto Select Booklet

(3) Setting item

- “Auto Select Booklet”
- User Defined
- Off

6.3.2 Auto Zoom for Combine/Booklet

(1) Use

- To select whether to adjust to a suitable zoom ratio automatically when selecting Page Combination or Booklet and selecting Auto in Paper.

(2) Default setting

- Auto Display Zoom Ratio

(3) Setting item

- “Auto Display Zoom Ratio”
- Off

6.3.3 Booklet Short Cut Mode

(1) Use

- To select whether to set [ON] automatically to the booklet function when transferring to the booklet setting screen.

(2) Default setting

- OFF

(3) Setting item

- ON
- “OFF”

6.3.4 Auto Sort/Group Selection

(1) Use

- Selects whether to use the auto sort/group selection function when a job has output of two or more sheets.

Yes	Automatically disables the Auto sort/group selection when a sheet of original is placed on the ADF and the start key is pressed. Automatically enables the Auto sort/group selection when two or more sheets of originals are placed on the ADF and the start key is pressed.
No	Disable the Auto sort/group selection.

(2) Default setting

- Yes

(3) Setting item

- “Yes”
- No

6.3.5 Default Copy Settings

- This menu is unavailable if user authentication is not made while either of authentication device 2 is set to Set in the [Service Mode] -> [Billing Setting] -> [Management Function Choice].
- This menu is not available when the key counter is set or when a warning appears to inform that the vendor’s main power switch needs to be checked or coins (a card) are not inserted under the condition where the vendor 2 is set to Set in the [Service Mode] -> [Billing Setting] -> [Management Function Choice].

(1) Use

- To make default settings for the copy mode.

Current Setting	The settings made on the control panel before entering the setting menu screens are registered as the default settings of copy functions.
Factory Default	The settings made at the time of shipment from the factory are registered as the default settings of copy functions.

- * The machine is initialized at the following timings:
  - The main power switch is turned ON.
  - Panel is reset.
  - In an Interrupt mode.
  - Auto Reset
  - The password entry screen for account track is changed.

(2) Default setting

- Factory Default

(3) Setting item

- Current Setting
- “Factory Default”

6.3.6 Default Enlarge Display Settings

- Displayed only when you select [Utility] -> [User Settings] -> [Copier Settings] in the enlarge display mode.

(1) Use

- To make default settings for the enlarge display mode.

Current Setting	The settings made on the control panel before entering the setting menu screens are registered as the default settings of copy functions.
Factory Default	The settings made at the time of shipment from the factory are registered as the default settings of copy functions.

- * The machine is initialized at the following timings:
  - The main power switch is turned ON.
  - Panel is reset.
  - In an Interrupt mode.
  - Auto Reset
  - The password entry screen for account track is changed.

(2) Default setting

- Factory Default

(3) Setting item

- Current Setting
- “Factory Default”

6.3.7 When AMS Direction is Incorrect

(1) Use

- To set whether to print when the original is set in different direction from the set paper during auto zoom select.

Print	To print according to the selected direction and size of paper.
Delete Job	To display alarm and cancel the job.

(2) Default setting

- Print

(3) Setting item

- “Print”
- Delete Job

6.3.8 Separate Scan Output Method

(1) Use

- To set the output mode at Separate Scan setting.

Page Print	Print consecutively during the read operation.
Batch print	• Print all at once after reading all data. • Copy setting can be changed after the read operation.

(2) Default setting

- Page Print

(3) Setting item

- “Page Print”
- Batch Print

6.3.9 Enlargement Rotation

(1) Use

- Sets whether to rotate images of which length is more than 297 mm in the main scan direction (in the horizontal direction on the ADF or the Original glass) in the copying process.

Allow	Copy an original image enlarged by automatically rotating.
Restrict	No rotation and no enlargement.

(2) Default setting

- Allow

(3) Setting item

- “Allow”
- Restrict

6.3.10 Auto Zoom (Platen)

- It will be displayed only when the following setting is set to “Level 1” or “Level 2.”
  [Administrator Settings] -> [Security Settings] -> [Administrator Security Levels]

(1) Use

- To set whether to function the auto magnification when the feed tray is selected with document set on the original glass (excepting at automatic paper selection mode.)

(2) Default setting

- OFF

(3) Setting item

- ON
- “OFF”

6.3.11 Auto Zoom (ADF)

- It will be displayed only when the following setting is set to “Level 1” or “Level 2”.
  [Administrator Settings] -> [Security Settings] -> [Administrator Security Levels]

(1) Use

- To set whether to function the auto magnification when the feed tray is selected with document set on the ADF (excepting at automatic paper selection mode.)

(2) Default setting

- ON

(3) Setting item

- “ON”
- OFF

6.3.12 Specify Default Tray when APS Off

- It will be displayed only when the following setting is set to “Level 1” or “Level 2.”
  [Administrator Settings] -> [Security Settings] -> [Administrator Security Levels]

(1) Use

- To set the tray to be used when APS is cancelled.

(2) Default setting

- Tray Before APS ON

(3) Setting item

- “Tray Before APS ON”
- Default Tray

6.3.13 Select Tray for Insert Sheet

(1) Use

- To select the default setting of the tray for cover sheet paper.

(2) Default setting

- Tray 2

6.3.14 Tri-Fold Print Side

- It will be displayed only when the following setting is set to “Level 1” or “Level 2.”
  [Administrator Settings] -> [Security Settings] -> [Administrator Security Levels]
- It will be displayed only when the optional saddle stitcher SD-511 is installed in the finisher FS-534.

(1) Use

- Specifies the side of copies to be folded.

Inside	Folds paper in three with the printed side in.
Outside	Folds paper in three with the printed side out.

(2) Default setting

- Inside

(3) Setting item

- Outside
- “Inside”

6.3.15 Print Jobs During Copy Operation

- It will be displayed only when the following setting is set to “Level 2.”
  [Administrator Settings] -> [Security Settings] -> [Administrator Security Levels]

(1) Use

- To set whether to accept the printing job for print job or fax job during copy operation.

Accept	Receives the print job or fax job to print.
Receive Only	Print job or fax job will be printed when the copy operation is finished.

(2) Default setting

- Accept

(3) Setting item

- “Accept”
- Receive Only

6.3.16 Automatic Image Rotation

- [It will be displayed only when the following setting is set to “Level 1” or “Level 2.”
  [Administrator Settings] -> [Security Settings] -> [Administrator Security Levels]

(1) Use

- To select which setting to rotate the original image automatically when the direction of paper is different form that of original.

When Auto Paper/Auto Zoom/Reduce is set	Rotates the original image automatically when selecting Auto for paper and Auto or Reduce for zoom ratio.
When Auto Paper/Auto Zoom is set	Rotates the original image automatically when selecting Auto for paper and Auto for zoom ratio.
When Auto Zoom/Reduce is set	Rotates the original image automatically when selecting Auto for paper and Reduce for zoom ratio.
When Auto Zoom is set	Rotates the original image automatically when selecting Auto for zoom ratio.

(2) Default setting

- When Auto Paper/Auto Zoom is set

(3) Setting item

- When Auto Paper/Auto Zoom/Reduce is set
- “When Auto Paper/Auto Zoom is set”
- When Auto Zoom/Reduce is set
- When Auto Zoom is set

6.3.17 Finishing Program

- It will be displayed only when the optional finisher FS-533/534 is mounted.

(1) Use

- Configure whether to display the Finishing Program button in the basic settings screen.
  To display the button, register the contents of the finishing program.

Register frequently used finishing functions so that you can set them at once by using the button that appears in the basic settings screen.

(2) Default setting

- ON

(3) Setting item

- "ON"
- OFF

NOTE

- **When selecting "ON," select the contents to be registered in the finishing program.**

6.3.18 Card Shot Settings

(1) Layout

(a) Use

- To set the initial copy layout setting in card shot mode.

(b) Default setting

- Top/Bottom

(c) Setting item

- "Top/Bottom"
- Left/Right (Upper Half)
- Left/Right

(2) Zoom

(a) Use

- To set the initial zoom setting in card shot mode.

(b) Default setting

- Full Size

(c) Setting item

- "Full Size"
- x 1.0

(3) Store Original Size

(a) Use

- To pre-register original sizes that are used in card shot mode.

(b) Procedure

- Enter an original size, name it, and register the data.

6.4 Scan/Fax Settings

6.4.1 JPEG Compression Level

(1) Use

- To set the JPEG compression method when scanning with JPEG while in scan/fax mode.

High Quality	Lowers the compression rate and puts priority in quality while scanning.
Standard	Compression rate and quality are normally balanced while scanning.
High Compression	Makes the compression rate higher and puts priority in lowering the data volume while scanning.

(2) Default setting

- Standard

(3) Setting item

- High Quality
- "Standard"
- High Compression

6.4.2 Black Compression Level

(1) Use

- To set the black compression method for scanning in the black mode while in scan/fax mode.

(2) Default setting

- MMR

(3) Setting item

- MH
- "MMR"

6.4.3 TWAIN Lock Time

(1) Use

- To set the period of time for unlocking the operation panel while in TWAIN scanning.

(2) Default setting

- 120 sec.

(3) Setting range

- 30 to 300 sec.

6.4.4 Default Scan/Fax Settings

- This menu is unavailable if user authentication is not made while either of authentication device 2 is set to set in the [Service Mode] -> [Billing Setting] -> [Management Function Choice].
- This menu is not available when the key counter is set or when a warning appears to inform that the vendor's main power switch needs to be checked or coins (a card) are not inserted under the condition where the vendor 2 is set to Set in the [Service Mode] -> [Billing Setting] -> [Management Function Choice].

(1) Use

- To make default settings for the scan/fax mode.

Current Setting	The settings made on the control panel before entering the setting menu screens are registered as the default settings of scan/fax functions.
Factory Default	The settings made at the time of shipment from the factory are registered as the default settings of scan/fax functions.

- * The machine is initialized at the following timings:
  - The main power switch is turned ON.
  - Panel is reset.
  - In an Interrupt mode.
  - Auto Reset
  - The password entry screen for account track is changed.

(2) Default setting

- Factory Default

(3) Setting item

- Current Setting
- "Factory Default"

6.4.5 Default Enlarge Display Settings

- Displayed only when you select [Utility] -> [User Settings] -> [Scan/Fax Settings] in the enlarge display mode.

(1) Use

- To make default settings for the enlarge display mode.

Current Setting	The settings made on the control panel before entering the setting menu screens are registered as the default settings of scan/fax functions.
Factory Default	The settings made at the time of shipment from the factory are registered as the default settings of scan/fax functions.

- * The machine is initialized at the following timings:
  - The main power switch is turned ON.
  - Panel is reset.
  - In an Interrupt mode.
  - Auto Reset
  - The password entry screen for account track is changed.

(2) Default setting

- Factory Default

(3) Setting item

- Current Setting
- "Factory Default"

6.4.6 Compact PDF/XPS Compression Level

(1) Use

- Selects a compression method applied to scanned data that is produced with the use of Compact PDF/XPS in the scan/fax mode.

High Quality	Lowers the compression rate and puts priority in quality while scanning.
Standard	Compression rate and quality are normally balanced while scanning.
High Compression	Makes the compression rate higher and puts priority in lowering the data volume while scanning.

(2) Default setting

- Standard

(3) Setting item

- High Quality
- "Standard"
- High Compression

6.4.7 Color TIFF Type

(1) Use

- Select the compression level used for saving TIFF format data in color.

TIFF (TTN2)	Scan in TTN2.
TIFF (modified TAG)	Scan in modified TAG.

(2) Default setting

- TIFF (TTN2)

(3) Setting item

- "TIFF (TTN2)"
- TIFF (modified TAG)

6.4.8 OCR Operation Setting

- It will be displayed only when the optional i-Option (LK-105) is activated.
- To specify the file type to DOCX or XLSX, the optional i-Option LK-110 and Upgrade Kit UK-204 are required.

(1) Use

- To set prioritize between the quality of character recognition and processing speed, when creating a searchable PDF file or a searchable PPTX, DOCX and XLSX file.

(2) Default setting

- Prioritize Speed

(3) Setting item

- Prioritize Quality
- "Prioritize Speed"

6.4.9 Graphic Outlining

(1) Use

- To set the precision of outline conversion where outline PDFs are created.
- To set the processing level where scanned document is divided into text areas and image areas and the text is converted to outlines.

(2) Default setting

- OFF

(3) Setting item

- HIGH
- MIDDLE
- LOW
- "OFF"

6.4.10 Auto Rename Function

(1) Use

- To avoid duplicate file names being created in the destination when the file name is specified by the user, select whether to automatically add text to the file name.
- When [ON] is selected, the following text is added automatically.
  [Device Name] + [lower 2 digits of year] + [2 digits in month] + [2 digits in date] + [2 digits in hour] + [2 digits in minute] + [2 digits in sequential number]
  However, if a file name is automatically created, the text is not added.

(2) Default setting

- OFF

(3) Setting item

- ON
- "OFF"

6.5 Printer Settings

6.5.1 Basic Settings

(1) PDL Setting

(a) Use

- To set the PDL (Page Description Language) for PC printing.

(b) Default setting

- Auto

(c) Setting item

- "Auto"
- PCL
- PS

(2) Number of Copies

(a) Use

- To set the number to be copied when not specified by the printer driver during PC printing.
- To use when the number cannot be specified by the printer driver during printing from Windows DOS, etc.

(b) Default setting

- 1 Copies

(c) Setting range

- "1" to 9999 Copies

(3) Original Direction

(a) Use

- To set the default setting for the direction of the original during PC printing.

(b) Default setting

- Portrait

(c) Setting item

- "Portrait"
- Landscape

(4) Spool Print Jobs in HDD before RIP

(a) Use

- To set whether to store the print job to HDD when receiving the next job during RIP process of the current job.

(b) Default setting

- ON

(c) Setting item

- "ON"
- OFF

(5) A4/A3 <--> LTR/LGR Auto Switch

(a) Use

- To set whether to switch between A4 and Letter (8 $^{1}/_{2}$ x 11) size paper, and A3 and Ledger (11 x 17) size paper in reading.

NOTE

- **When switching the size, the image will be printed in the same magnification.**
- **The image will not be reduced when there is image deficiency.**

(b) Default setting

- OFF

(c) Setting item

- ON
- "OFF"

(6) Banner Sheet Setting

(a) Use

- To set whether or not to print on the banner (front cover) page.

(b) Default setting

- OFF

(c) Setting item

- ON
- “OFF”

(7) Binding Direction Adjustment

(a) Use

- Specifies the alignment between the sides of paper (binding position adjustment) in duplex printing.
- To achieve faster printing performance, select Productivity Priority. To address misalignment problems between sides of copies in the horizontal and vertical directions, select Finishing Priority.

Finishing Priority	Able to optimize sides aligning operation as the process is performed after the machine receives all of the print job.
Productivity Priority	Able to accelerate print speed as sides alignment proceeds together with data reception and print operation.
Control Adjustments	Comply with the command from the printer driver and does not take the side alignment step.

(b) Default setting

- Finishing Priority

(c) Setting item

- “Finishing Priority”
- Productivity Priority
- Control Adjustments

(8) Line Width Adjustment

(a) Use

- To correct line width of the output data during PC print.

(b) Default setting

- Thin

(c) Setting item

- “Thin”
- Normal
- Thick

(9) Gray Background Text Correction

(a) Use

- Letters or lines on a gray background may look thicker than those on a non-gray background.

ON	Makes characters and lines on a grayscale background thicker and sharpens the outlines of characters and figures.
OFF	Makes grayscale background text correction by selecting Thin, Normal, or Thick in [Line Width Adjustment]. If selecting “ON” makes lines too thick, select “OFF.”

(b) Default setting

- ON

(c) Setting item

- “ON”
- OFF

(10) Minimal Print

(a) Use

- To set whether to slightly reduce the entire page when directly printing a PDF, PPML, or OOXML (docx, xlsx, or pptx) file.

(b) Default setting

- OFF

(c) Default setting

- ON

- "OFF"

(11) OOXML Print Mode

(a) Use

- To set whether to give priority to either the image quality or speed when directly printing an OOXML (docx, xlsx, or pptx) file.

(b) Default setting

- Prioritize Speed

(c) Setting item

- "Prioritize Speed"
- Prioritize Quality

(12) Fold Type Settings

(a) Use

- To set whether to fold the printed sheets. When you want to fold the printed sheets, set the folding mode.

(b) Default setting

- No

(c) Setting item

- "No"
- Half-Fold
- Tri-Fold

(13) Half-Fold/Tri-Fold Specification Settings

(a) Use

- To set the unit by which the paper is folded from [By Copy Job (Multiple Sheets)], [1 Unit], and [By Page].
- When you select [By Page], enter the number of pages to be folded at one time at [Per Page Setting].

(b) Default setting

- By Copy Job (Multiple Sheets)

(c) Setting item

- "By Copy Job (Multiple Sheets)"
- 1 Unit
- By Page

6.5.2 Paper Setting

(1) Paper Tray

(a) Use

- To set the paper feed tray when not specified by the printer driver during PC printing.
- To use when paper feed tray cannot be specified by the printer driver when printing from Windows DOS, etc.

(b) Default setting

- Auto

(2) Paper Size

(a) Use

- To set the paper size when not specified by the printer diver during printing.
- To use when the paper size cannot be specified by the printer driver during printing from Windows DOS, etc.

(3) 2-Sided Print

(a) Use

- To set whether to carry out duplex print during PC printing when not specified by the printer driver.
- To use when 2-sided printing cannot be specified by the printer driver while printing by Windows DOS, etc.

(b) Default setting

- OFF

(c) Setting item

- ON
- "OFF"

(4) Binding Position

(a) Use

- To set the binding direction during duplex printing when not specified by the printer driver during PC printing.
- To use when binding direction cannot be specified by the printer driver during printing by Windows DOS, etc.

(b) Default setting

- Left Bind

(c) Setting item

- Top Bind
- “Left Bind”
- Right Bind

(5) Staple

- It will be displayed only when the optional finisher is mounted.

(a) Use

- To set whether to staple or not when not specified by the printer driver during PC printing.
- To use hen staple is not specified by the printer driver during printing by the Windows DOS, etc.

(b) Default setting

- OFF

(c) Setting item

- 1 Position
- 2 Position
- “OFF”

(6) Punch

- It will be displayed only when the optional finisher and punch kit are mounted.

(a) Use

- To select whether to make punch-holes or not when not specified by the printer driver during PC printing.
- To use when the printer driver cannot specify punching during printing from Windows DOS, etc.

(b) Default setting

- OFF

(c) Setting item

- 2-Hole/3-Hole/4-Hole *
- “OFF”

*: The number of punch holes being set is available from [Service Mode] -> [Finisher].

(7) Banner Paper Tray

(a) Use

- To set the feed tray for printing on the banner (front cover) page.

(b) Default setting

- Auto

6.5.3 PCL Settings

(1) Font Settings

(a) Use

- To set the font when not specified by the printer driver during PC printing.
- To use when the printer driver cannot specify the font during printing from Windows DOS, etc.
- It can be selected from the Resident font or the download font.

(b) Procedure

1. When selecting from the Internal font, touch [Resident Font], and select the one from the displayed font list.

(c) Default setting

- Courier

(2) Symbol Set

(a) Use

- To set the font symbol set when not specified by the printer driver during PC printing.

- To use when the font symbol set cannot be specified by the printer driver during printing from Windows DOS, etc.

(b) Default setting

- Roman-8 or PC-8, Code Page 437

(3) Font Size

(a) Use

- To set the font size when not specified by the printer driver during PC printing.
- To set the font size when it cannot be specified by the printer driver during printing from Windows DOS, etc.
- To set scalable font (: Point) and bitmap font (: Pitch) respectively.

(b) Default setting

- Scalable Font: 12.00 points
- Bitmap Font: 10.00 pitch

(4) Line/Page

(a) Use

- To set the number of lines per page for printing the text data.

(b) Default setting

- 60 or 64 lines

NOTE

- **Default setting value differs depending on the values by the following two different settings.**
  [Utility] -> [User Setting] -> [Printer Setting] -> [Basic Settings] -> [Original Direction]
  [Utility] -> [User Setting] -> [Printer Setting] -> [Paper Setting] -> [Paper Size]

(c) Setting range

- 5 lines to 128 lines

(5) CR/LF Mapping

(a) Use

- To set the mode for replacing data when printing the text data.

Mode 1	CR -> CR-LF LF=LF FF=FF
Mode 2	CR=CR LF -> CR-LF FF -> CR-FF
Mode 3	CR -> CR-LF LF -> CR-LF FF -> CR-FF
No	Does not replace

(b) Default setting

- No

(c) Setting item

- Mode 1
- Mode 2
- Mode 3
- “No”

(6) Bar Code Font Settings

- This is displayed only when the optional i-Option LK-106 and upgrade kit UK-204 are enabled.

(a) Use

- To set line width and space width for the bar code font.

(b) Default setting

- 0%

(c) Setting range

- -50 to +50 (by 5%)

6.5.4 PS Setting

(1) Print PS Errors

(a) Use

- To set whether to print or not the error information when an error occurred during PS rasterizing.

(b) Default setting

- OFF

(c) Setting item

- ON
- "OFF"

6.5.5 Security Settings

(1) Verify XPS/OOXML Digital Signature

(a) Use

- To set whether to verify a digital signature when printing an XPS or OOXML (docx, xlsx, or pptx) file with a digital signature added.

(b) Default setting

- OFF

(c) Setting item

- ON
- "OFF"

6.5.6 OOXML Print Settings

(1) Print Sheet/Book

(a) Use

- To set whether to print the currently selected sheet or the entire book when handling an Excel file.

(b) Default setting

- Current Sheet

(c) Setting item

- "Current Sheet"
- All Sheets

(2) Paper Size

(a) Use

- To set a paper size to print an OOXML (docx, xlsx, or pptx) file.

(b) Default setting

- Auto Paper Select

(c) Setting item

- "Auto Paper Select", SRA3, A3, A4, A5, A6, B4, B5, B6, 12×18, 11×17, $8^1/_2$×14, $8^1/_2$×11, $7^1/_4$×$10^1/_2$, $5^1/_2$×$8^1/_2$, 8K, 8×13*, 16K, Post., 4×6, envB5, envC4, envC5, envC6, envDL, envCom10, envMonarch, Y3 Envelope, Y4 Envelope, L3 Envelope, L4 Envelope, K1 Envelope, K2 Envelope, K3 Envelope
- * The paper size selected in [Foolscap Size Setting] in service mode is displayed.

(3) Paper Type

(a) Use

- To set a paper type to print an OOXML (docx, xlsx, or pptx) file.

(b) Default setting

- Auto

(c) Setting item

- "Auto", Plain Paper, Single Side Only, Thin Paper, Transparency, Special Paper, Thick 1, Thick 1+, Thick 2, Thick 3, Thick 4, Letterhead, Colored Paper, Envelope, Index Paper, Recycled, User Paper 1, User Paper 2, User Paper 3, User Paper 4, User Paper 5, User Paper 6

6.5.7 Layout - Combination

(1) Use

- To set whether to reduce multiple pages onto one sheet for printing.

(2) Default setting

- No

(3) Setting item

- Yes

- "No"

6.5.8 Print Reports

- It will not be displayed when the following setting shows that vendor 2 is mounted.
  [Service Mode] -> [Billing Setting] -> [Management Function Choice]
  (It will be displayed when the key counter is mounted.)

(1) Use

- To output the report or demo page concerning the print setting.
- To check the setting concerning the printer.
  The types of report available for output are as follows.

Configuration Page	The list of printer setting will be output.
Demo Page	The test page will be output.
PCL Font List	PCL font list will be output.
PS Font List	PS font list will be output.

(2) Procedure

1. Touch [User Setting] -> [Printer Settings] -> [Print Reports].
2. Select the report to be output.
3. Select the paper tray.
4. Select simplex or duplex print, and touch the Start key.

6.5.9 TIFF Image Paper Setting

(1) Paper Selection

(a) Use

- Select this option to configure how to determine the paper size when directly printing TIFF or JPEG image data.

Auto Paper Select	• Select this option to calculate the size of the image based on its resolution and the number of pixels to print the image on paper that fits the image size. • Select this option to print images on paper of the same size as the image.
Priority Paper Size	• Select this option to print on paper of the priority paper size specified on the machine. • If the image size is larger than the paper size, it is automatically reduced.

NOTE

- **When "Auto Paper Select" is selected and paper larger than the image size is not in the paper trays, paper size error occurs.**

(b) Default setting

- Auto Paper Select

(c) Setting item

- "Auto Paper Select"
- Priority Paper Size

6.6 Change Password

- When conducting user authentication (Main body authentication only), it will be displayed only when login is authenticated as user.
- When conducting user authentication or account track input, it will be displayed only when login is authenticated as user box administrator.

6.6.1 Use

- To change the password of the user whose login is authenticated as user.

6.6.2 Procedure

- Enter the user authentication password with the keys on the control panel.
  1. Enter the user authentication password currently used.
  2. Password: Enter the new user authentication password to be used.
  3. Password Confirmation: Enter the new user authentication password again.

NOTE

- **When [Password Rules] which can be displayed by the following setting is set to "Enable", password using the single letter or the password same with the previous one, less than 8-digit will not be modified.**
  [Utility] -> [Administrator Settings] -> [Security Settings] -> [Security Details]
- **When the following setting is set to "ON", entering the incorrect password three times will cause access lock. When an access lock occurred, turn the main power switch OFF, and wait for 10 seconds or more and turn main power switch ON again to enter the password again.**
  [Administrator Settings] -> [Security Settings] -> [Enhanced Security Mode]

6.7 Change E-Mail Address

- When conducting user authentication (MFP only), it will be displayed only when the authentication is complete.
- It will be displayed only when the following setting is set to "Level 2."
  [Administrator Settings] -> [Security Settings] -> [Administrator Security Levels]

6.7.1 Use

- To modify the e-mail address which is registered as a user.

6.7.2 Procedure

- Enter the new e-mail address using the keys on the control panel.

6.8 Register Authentication Settings

- It will be displayed when user authentication (MFP) is completed and the following is met;
  [Biometric/IC Card Info. Registration] is set to “Allow” in [Administrator Settings] -> [System Settings] -> [Restrict User Access] -> [Restrict Access to Job Settings].
  [Biometric/IC Card Info. Registration] is set to “Allow” in [Administrator Settings] -> [User Authentication/Account Track] -> [User Authentication Settings] -> [User Registration] -> [Function Permission].

6.8.1 Use

- To enable users to register or delete their own biometric/IC card information.

6.9 Synchronize User Auth. and Account Track

- When conducting user authentication (ON (MFP), External Server Authentication, or Main + External Server), it will be displayed only when the authentication is complete.
- It will be displayed when the following setting is set to “Synchronize by User.”
  [Administrator Settings] -> [User Authentication/Account Track] -> [General Settings] -> [Synchronize User Authentication & Account Track]

6.9.1 Use

- To set whether to synchronize the user authentication and account track.

6.9.2 Default setting

- Synchronize

6.9.3 Setting item

- “Synchronize”
- Do Not Synchronize
- When selecting [Synchronize], set the account name.

6.10 Cellular Phone/PDA Setting

6.10.1 Link File Error Notification

- It will be displayed only when the optional local interface kit EK-607 is mounted.

(1) Use

- To set whether to print a job where a link error occurs when you are trying to print a web page and its links (page or file) from a cellular phone or PDA.

(2) Default setting

- Yes

(3) Setting item

- “Yes”
- No

6.10.2 Proxy Server Use

- It will be displayed only when the optional local interface kit EK-607 is mounted.

(1) Use

- To set whether to use a proxy server when communicating with a cellular phone or PDA.

(2) Default setting

- No

(3) Setting item

- Yes
- “No”

6.10.3 Print

- It will be displayed only when the optional local interface kit EK-607 is mounted.

(1) Use

- To set different print settings used when printing from a cell phone or PDA.

(2) Procedure

- The following items can be set.
  - Basic: 1-sided/2-sided, Paper, Finishing
  - Application: Page Margin, Stamp/Composition

7. UTILITY (ADMINISTRATOR SETTINGS)

Administrator Settings-Outline

- The Administrator Settings will be available by entering the administrator password (16 digits) set by the Administrator Settings or Service Mode. (The administrator password is initially set to "1234567812345678.")

NOTE

- **When the following setting is set to "ON", entering the incorrect administrator password three times will cause access lock.**
  [Administrator Settings] -> [Security Settings] -> [Enhanced Security Mode]
  The access lock is released after the lapse of a predetermined period of time after the main power switch is turned OFF and then ON more than 10 seconds later.
  The access lock can be released by touching keys as follows.
  [Service Mode] -> [Enhanced Security] -> [Administrator unlocking].

7.1 System Settings-Power Supply/Power Save Settings

7.1.1 Low Power Mode Settings

(1) Use

- To set the time until low power starts operating after the last key operation has been completed.
- Low power: To turn LED and LCD OFF, and lower the power consumption.

(2) Procedure

- Use the 10-key pad for setting.

(3) Default setting

- 15 min.
- When the marketing area setting is set to "Japan" or "Others3", the default setting is 1 min.

(4) Setting range

- 2 min. to 60 min.
- The upper limit can be set up to 240 min. only when the switch number "157" is specified to "02" with HEX by configuring the following settings.
  [Service Mode] -> [System 2] -> [Software Switch Setting]

7.1.2 Sleep Mode Settings

(1) Use

- To set the time until sleep mode starts operating after the last key operation has been completed.
- Turn all lines OFF except 5 V line for control.
- "No" will only be displayed when [Sleep ON/OFF Choice Setting] in Service Mode is set.

NOTE

- **The sleep mode will begin in 48 hours even if it sets it to "OFF."**

(2) Procedure

- Use the 10-key pad for setting.

(3) Default setting

- 20 min.
- When the marketing area setting is set to "Japan" or "Others3", the default setting is 1 min.

(4) Setting range

- 2 min. to 60 min.
- No
- The upper limit can be set up to 240 min. only when the switch number "157" is specified to "02" with HEX by configuring the following settings.
  [Service Mode] -> [System 2] -> [Software Switch Setting]

7.1.3 Power Key Setting

(1) Use

- To set whether to use the Power key on the control panel as a sub power off mode or power save mode.

Sub Power OFF	• Short time press the Power key to turn the sub power off. • Long time press the Power key, the power save mode shifts to the ErP Auto Power Off mode* (close to main power off mode), which offers a higher power saving effect than sub power off mode.
Power Save	• Short time press the Power key to shift to the Power Save mode (Low Power or Sleep mode). • Long time press the Power key to shift to sub power off mode.

NOTE

- ***: In ErP auto power OFF mode, this machine cannot receive data or faxes, and also it cannot scan or print an original.**

(2) Default setting

- Power Save (except for Europe)
- Sub Power OFF (Europe)

(3) Setting item

- Sub Power OFF
- Power Save

7.1.4 Power Save Settings

(1) Use

- To set the type of the power save mode when pressing the Power key on the Control Panel.

(2) Default setting

- Low Power

(3) Setting item

- “Low Power”
- Sleep

7.1.5 Enter Power Save Mode

(1) Use

- To set whether to immediately switch to the power save mode after printing in case of receiving the fax/PC print during power save mode.

Normal	Switches to the power save mode according to the normal power save mode after the printing.
Immediately	Switches to the power save mode immediately after the printing.

(2) Default setting

- Immediately

(3) Setting item

- Normal
- “Immediately”

7.1.6 Power Consumption in Sleep Mode

(1) Use

- To set whether to reduce the power consumption in the sleep mode.

Enabled	Further reduces the power consumption in the Sleep mode. Select [Enabled] in normal conditions.
Disabled	Select this option when a smooth network communication is not established while [Enabled] is enabled.

(2) Default setting

- Enabled

(3) Setting item

- “Enabled”
- Disabled

7.1.7 Power Saving Fax/Scan

- This function is available when the option other than “Copy” is selected in [Administrator Settings] -> [System Settings] -> [Reset Settings] -> [System Auto Reset] -> [Priority Mode].

(1) Use

- Select whether to give priority to the power saving when the machine returns from Sleep or sub power off mode to a mode other than copy mode.
- When returning to a mode that does not involve printing, such as scan/fax mode, power consumption can be reduced by not adjusting the temperature of the Fusing Unit on this machine.

Power Save	The temperature of Fusing Unit is not adjusted when the machine returns to the normal mode.
Standard	The temperature of Fusing Unit is adjusted when the machine returns to the normal mode.

(2) Default setting

- Standard

(3) Setting item

- Power Save
- “Standard”

7.1.8 Awake from Power Save Mode by Touching Control Panel

(1) Use

- When Low Power mode or Sleep mode has been established: if hands or man get closer to Touch Panel, you can select whether to restore or not from Low Power mode or Sleep mode.

- If you select [OFF], the machine returns to the normal mode only using the Power key.

(2) Default setting

- ON

(3) Setting item

- "ON"
- OFF
- If you select [ON], you can adjust the sensitivity of the sensor. Making a setting on the minus side decreases the sensitivity (shortens the sensing distance). Making a setting on the positive side increases the sensitivity (lengthens the sensing distance).

7.2 System Settings-Output Settings

7.2.1 Print/Fax Output Settings

(1) Use

- To set the timing for printing for the PC print job or fax received.

Batch Print	Starts printing when all data are received.
Page Print	Starts printing every time data for each page are received.

(2) Default setting

- Print: Page Print
- Fax: Batch Print

NOTE

- **[Fax] will be displayed only when the optional fax kit FK-511 is mounted.**

(3) Setting item

- Batch Print
- Page Print

7.2.2 Output Tray Settings

- It will be displayed when the optional finisher FS-534 or job separator JS-506 is mounted.

(1) Use

- To set the priority output tray for each application (Copy print, Printer, Fax and Print Reports).

(2) Default setting

- Copy: Tray 2
- Print: Tray 2
- Print Reports: Tray 1
- Fax: Tray 1

7.2.3 Shift Output Each Job

- It will be displayed when the optional finisher FS-533/534 is mounted.

(1) Use

- To set whether to offset each job when paper is printed using the finisher.
- Some paper type may fail to be discharged or get deteriorated loading when large volume copies are printed using the finisher. This function is used to print large volume copies when finisher is mounted. (When this function is set to "No", the paper is discharged without offsetting the paper to the center of the tray.)

(2) Default setting

- Yes

(3) Setting item

- "Yes"
- No

7.3 System Settings-Date/Time Settings

7.3.1 Use

- To set the date/time and the time zone to start the clock.
- This setting should be carried out for set up.

7.3.2 Procedure

- For time zone, set the time difference with the world standard time.
- Setting range for the time zone: -12:00 to +13:00 (by 30 minutes)
- When the following setting is set to "ON", [Set Date] will be displayed. Touch [Set Date] and modify the time.
  [Administrator Settings] -> [Network Settings] -> [Detail Settings] -> [Time Adjustment Setting]

7.4 System Settings-Daylight Saving Time

7.4.1 Enable Settings

(1) Use

- To set whether to set the daylight saving time.
- To set the time difference in setting the daylight saving time.

(2) Default setting

- No

(3) Setting item

- Yes
- “No”

NOTE

- **When setting to “Yes”, set the time difference to move up.**
  - **Default setting: 60 min.**
  - **Setting range: 1 to 150**

7.4.2 Start/End Settings

(1) Use

- To set the daylight saving time to be automatically enabled on this machine at the specified date.

Specify Method	Set the method to specify the date and time to start the daylight saving time and the date and time to end it.	
	Weekly	Set the start date and end date by week and day of the week.
	Daily	Set the start date and the end date by date.
Start Date/Time / End Date/Time	Respectively select the date and time to start the daylight saving time and the date and time to end it.	

7.5 System Settings-Weekly Timer Settings

- It will not be displayed when the following setting shows that vendor 2 is mounted.
  [Service Mode] -> [Billing Setting] -> [Management Function Choice]

7.5.1 Weekly Timer ON/OFF Settings

(1) Use

- To set whether to use or not to use the weekly timer.

(2) Default setting

- ON

(3) Setting item

- “ON”
- OFF

(4) Power Save Mode Setting

(a) Use

- To configure the operation setting applied when the weekly timer is used.

ErP Auto Power OFF	A mode that provides a higher more effective power saving effect. In this mode, you cannot receive all jobs.
Sleep	This mode has a lower power saving effect than the [ErP Auto Power OFF] mode; however, it allows you to receive print jobs from a fax machine or computer. The received jobs are printed when the machine returns to the normal mode.

(b) Default setting

- ErP Auto Power OFF (Europe and US)
- Sleep (except for Europe and US)

(c) Setting item

- ErP Auto Power OFF
- Sleep

7.5.2 Time Settings

(1) Use

- To set the time to turn ON/OFF the weekly timer for each day of the week.

(2) Procedure

1. Touch the key of the day to be set.
2. Using the 10-key pad, input the ON time and the OFF time.

3. For cancelling the setting, press [Delete].

7.5.3 Date Settings

(1) Use

- To select the date or the day of the week for the weekly timer to function.

(2) Procedure

1. Select the Year/Month with [+] / [-] keys.
2. For setting by the date, touch the appropriate key of the day.
3. For setting by the day of the week, touch the appropriate key of the week by [Daily Setting].
4. Check to make sure that the set key of the day is highlighted, and touch [OK].

7.5.4 Select Time for Power Save

(1) Use

- To set the time to turn power OFF/ON when the weekly timer is set and the power is ON.

(2) Default setting

- No

(3) Setting item

- Yes
- "No"

NOTE

- **When "Yes" is selected, using the 10-key pad, input the Power Save Start Time and Power Save End Time.**

7.5.5 Password for Non-Business Hours

(1) Use

- To set whether to input the password before using when the weekly timer is set.

(2) Default setting

- No

(3) Setting item

- Yes
- "No"

NOTE

- **When setting to "Yes", enter the password (eight digits).**

7.5.6 Tracking Function Settings

(1) Use

- To select whether or not to enable the tracking function.
- Select [Auto Standby Adjustment Level] to specify the level at which it is judged that this machine is inactive. The higher the level is, the more easily this machine is judged as inactive, resulting in setting of a longer OFF time.
- When the tracking function is enabled, the weekly timer operates in accordance with the ON and OFF time calculated by the tracking function.

Level	Description
1	Lower.: Resulting in setting of a shortter OFF time.
2	
3	Default setting
4	
5	Higher.: Resulting in setting of a longer OFF time.

(2) Default setting

- ON

(3) Setting item

- "ON"
- OFF

7.5.7 Display ON/OFF Time

(1) Default setting

- The ON time and OFF time of the weekly timer are displayed, reflecting data that has been obtained on each day of a week.
- Touch [Clear Usage Data] to clear MFP usage data and ON time and OFF time values that reflect data obtained on each day of a week.

(2) Setting item

- ON Time: 6:00

- OFF Time: 20:00

7.6 System Settings-Restrict User Access

7.6.1 Restrict Program Function Setting

(1) Use

- To set whether to allow the user to use the copy program or fax/scan program.

(2) Default setting

- Allow

(3) Setting item

- "Allow"
- Restrict

7.6.2 Copy Program Lock Settings

(1) Use

- Restricts a change or deletion of the registered copy or image adjustment program name.

(2) Procedure

1. Touch the key for the appropriate copy program or image adjustment program.
2. Touch [OK].

7.6.3 Delete Saved Copy Program

(1) Use

- To delete the registered copy program or image adjustment program.

(2) Procedure

1. Touch the key for the appropriate copy program or image adjustment program.
2. Touch [Delete].
3. Touch [Yes] on the check screen to delete the program job.

7.6.4 Restrict Access to Job Settings

- It will not be displayed when the following setting shows that vendor 2 is mounted.
  [Service Mode] -> [Billing Setting] -> [Management Function Choice]

(1) Changing Job Priority

(a) Use

- To set whether to allow or restrict the change on the print priority for the job.

(b) Default setting

- Allow

(c) Setting item

- "Allow"
- Restrict

(2) Delete Other User Jobs

(a) Use

- To set whether to allow or restrict job delete by other users when the user is authenticated.

(b) Default setting

- Restrict

(c) Setting item

- Allow
- "Restrict"

(3) Registering and Changing Addresses

(a) Use

- To set whether to allow or restrict the change of the registered address.

(b) Default setting

- Allow

(c) Setting item

- "Allow"
- Restrict

NOTE

- **If [Administrator Settings] -> [Security Settings] -> [Enhanced Security Mode] is set to "ON", selecting "Allow" in this setting cancels enhanced security mode.**

(4) Changing Zoom Ratio

(a) Use

- To set whether to allow or restrict the change on the registered magnification.

(b) Default setting

- Allow

(c) Setting item

- "Allow"
- Restrict

(5) Change the "From" Address

(a) Use

- To set whether or not to prohibit the registered from address to be changed.

Administrator E-Mail Address	Set the administrator's E-mail address to "From" address.
Login User Address	When user authentication is enabled, set the user's E-mail address to "From" address.

(b) Default setting

- Allow (without user authentication)
- Login User Address (with user authentication)

(c) Setting item

- Allow
- Administrator E-Mail Address
- "Login User Address"

(6) Change Registered Overlay

(a) Use

- Selects allow or restrict for the change of registered overlay.

(b) Default setting

- Allow

(c) Setting item

- "Allow"
- Restrict

(7) Biometric/IC Card Info. Registration

- It will be displayed when the optional authentication unit AU-102/AU-201 is installed.

(a) Use

- Allow or restrict the registration or deletion of authentication information.

(b) Default setting

- Restrict

(c) Setting item

- Allow
- "Restrict"

(8) Synchronize User Authentication & Account Track

- It will be displayed when the following setting is set to "Synchronize by User."
  [Administrator Settings] -> [User Authentication/Account Track] -> [General Settings] -> [Synchronize User Authentication & Account Track]

(a) Use

- Select whether to allow users to change the settings for synchronizing user authentication and account track when user authentication and account track are enabled.

(b) Default setting

- Allow

(c) Setting item

- "Allow"
- Restrict

7.6.5 Restrict Operation

(1) Restrict Broadcasting

(a) Use

- To set whether or not to prohibit sending the fax to more than one address.

(b) Default setting

- OFF

(c) Setting item

- ON
- "OFF"

7.7 System Settings-Expert Adjustment

- It will not be displayed when the following setting shows that vendor 2 is mounted.
  [Service Mode] -> [Billing Setting] -> [Management Function Choice]
  (It will be displayed when the Key Counter is mounted when the following setting shows that switch No.33 is set to [00000001] at Bit assignment/[01] at HEX assignment.
  [Service Mode] -> [System 2] -> [Software Switch Setting])

7.7.1 AE Level Adjustment

(1) Use

- To set the default setting for AE (Auto Exposure) the larger the value becomes the more emphasized the background will be.
  - To make the background level foggier: Increase the setting value
  - To make the background level less foggy: Decrease the setting value

(2) Default setting

- 2

(3) Setting range

- 0 to 4

7.7.2 Printer Adjustment-Leading Edge Adjustment

- This menu is unavailable when the key counter is not inserted while only the key counter is set to Set by [Service Mode] -> [Billing Setting] -> [Management Function Choice].

(1) Use

- To vary the print start position in the sub scan direction for each of different paper types in the manual bypass tray. (to adjust the timing where paper is sent out from the registration roller)
- This adjustment is made using a paper fed from the manual bypass tray and the adjusted value will be reflected to the other trays.
- The PH unit has been replaced.
- The paper type has been changed.
- The print image deviates in the sub scan direction.
- A faint image occurs on the leading edge of the image.
- Able to make an individual adjustment for each paper type of plain paper, thin paper, thick 1/1+, thick 2, thick 3, thick 4, transparency, and envelope.
- To set the paper in the tray 1 when selecting thin paper.

(2) Setting range

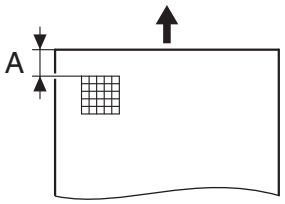

- Width A on the test pattern produced should fall within the following target.

Target	4.2 mm ± 1.0 mm
Setting range	-3.0 mm to +3.0 mm (in 0.2 mm increments)

(3) Procedure

1. Place A3/11 x 17 plain paper on the manual bypass tray.
2. Call the Administrator Settings to the screen.
3. Touch [System Settings] -> [Expert Adjustment] -> [Printer Adjustment] -> [Leading Edge Adjustment].
4. Select the plain paper.
5. Press the Start key to let the machine produce a test pattern.
6. Check the dimension of width A on the test pattern.
7. If width A falls outside the target, change the setting using the [+] / [-] key.
   - If width A is longer than the target, make the setting value smaller than the current one.
   - If width A is shorter than the target, make the setting value greater than the current one.
8. Press the Start key to let the machine produce a test pattern.
9. Check the dimension of width A on the test pattern.
10. If width A is outside the target, change the setting again and make a check again.
11. If width A falls within the target, touch [OK].
12. Following the same procedure, adjust for thin paper, thick 1 to 4, transparency, and envelope.

7.7.3 Printer Adjustment-Centering

- This menu is unavailable when the key counter is not inserted while only the key counter is set to Set by [Service Mode] -> [Billing Setting] -> [Management Function Choice].

(1) Use

- To vary the print start position in the main scan direction for each paper source.
- The PH unit has been replaced.
- A paper feed unit has been added.
- The print image deviates in the main scan direction.

(2) Setting range

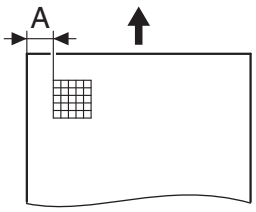

- Width A on the test pattern produced should fall within the following target.

Target	3.0 mm ± 1.0 mm
Setting range	-3.0 mm to +3.0 mm (in 0.2 mm increments)

(3) Procedure

1. Call the Administrator Settings to the screen.
2. Touch [System Settings] -> [Expert Adjustment] -> [Printer Adjustment] -> [Centering].
3. Select the paper source to be adjusted.
4. Press the Start key to let the machine produce a test pattern.
5. Check the dimension of width A on the test pattern.
6. If width A falls outside the target, change the setting using the [+] / [-] key.
   - If width A is longer than the target, make the setting value smaller than the current one.
   - If width A is shorter than the target, make the setting value greater than the current one.
7. Press the Start key to let the machine produce a test pattern.
8. Check the dimension of width A on the test pattern.
9. If width A is outside the target, change the setting again and make a check again.
10. If width A falls within the target, touch [OK].
11. Following the same procedure, adjust for all other paper sources.
    (Use A4 or 8 $^{1}/_{2}$ x 11 plain paper for the bypass.)

7.7.4 Printer Adjustment-Leading Edge Adjustment (Duplex Side 2)

- This menu is unavailable when the key counter is not inserted while only the key counter is set to Set by [Service Mode] -> [Billing Setting] -> [Management Function Choice].

(1) Use

- Makes an adjustment by changing the image write start position in the sub scan direction on the 2nd side of duplex printing for plain paper.
- This adjustment is made using a paper fed from the manual bypass tray and the adjusted value will be reflected to the other trays.
- When the 2nd side image on paper fed from the tray is shifted in the sub scan direction.
- Able to make an individual adjustment for each paper type of plain paper, thin paper, thick 1/1+, thick 2 and thick 3.
- To set the paper in the tray 1 when selecting thin paper.

(2) Setting range

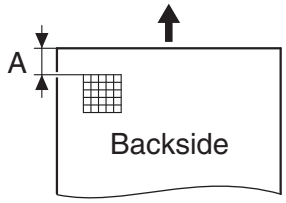

- Width A on the test pattern produced should fall within the following target.
- For measurement, use the image produced on the backside of the test pattern.

Target	4.2 mm ± 1.0 mm
Setting range	-3.0 mm to +3.0 mm (in 0.2 mm increments)

(3) Procedure

1. Place A3/11 × 17 plain paper on the manual bypass tray.
2. Call the Administrator Settings to the screen.
3. Touch [System Settings] -> [Expert Adjustment] -> [Printer Adjustment] -> [Leading Edge Adjustment (Duplex Side 2)].
4. Select the plain paper.
5. Press the Start key to let the machine produce a test pattern.
6. Check the dimension of width A on the test pattern.
7. If width A falls outside the target, change the setting using the [+] / [-] key.
   - If width A is longer than the target, make the setting value smaller than the current one.
   - If width A is shorter than the target, make the setting value greater than the current one.
8. Press the Start key to let the machine produce a test pattern.
9. Check the dimension of width A on the test pattern.
10. If width A is outside the target, change the setting again and make a check again.
11. If width A falls within the target, touch [OK].
12. Following the same procedure, adjust for thin paper and thick 1 to 3.

7.7.5 Printer Adjustment-Centering (Duplex 2nd Side)

- This menu is unavailable when the key counter is not inserted while only the key counter is set to set by [Service Mode] -> [Billing Setting] -> [Management Function Choice].

(1) Use

- To vary the print start position in the main scan direction for each paper source in the 2-sided mode.
- The image on the backside of the 2-sided copy deviates in the main scan direction.

(2) Setting range

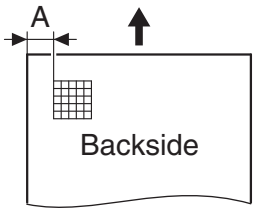

- Width A on the test pattern produced should fall within the following target.
- For measurement, use the image produced on the backside of the test pattern.

Target	3.0 mm ± 1.0 mm
Setting range	-3.0 mm to +3.0 mm (in 0.2 mm increments)

(3) Procedure

1. Call the Administrator Settings to the screen.
2. Touch [System Settings] -> [Expert Adjustment] -> [Printer Adjustment] -> [Centering (Duplex 2nd Side)].
3. Select the paper source to be adjusted.
4. Press the Start key to let the machine produce a test pattern.
5. Check the dimension of width A on the test pattern.
6. If width A falls outside the target, change the setting using the [+] / [-] key.
   - If width A is longer than the target, make the setting value smaller than the current one.
   - If width A is shorter than the target, make the setting value greater than the current one.
7. Press the Start key to let the machine produce a test pattern.
8. Check the dimension of width A on the test pattern on the backside of the copy.
9. If width A is outside the target, change the setting again and make a check again.
10. If width A falls within the target, touch [OK].
11. Following the same procedure, adjust for all other paper sources.
    (Use A4 or 8 $^{1}/_{2}$ x 11 plain paper for the manual bypass tray.)

7.7.6 Printer Adjustment-Erase Leading Edge

- It will be displayed only when the following setting is set to “Level 2”.

[Service Mode] -> [Enhanced Security] -> [Administrator Feature Level]

(1) Use

- To set the leading edge erase amount of the paper.
- To change the width of the area not printed along the leading edge of the paper.
- This adjustment can be made individually for Front, Back, Thin Paper Front, and Thin Paper Back.

(2) Default setting

- Front/Back: 4 mm
- Thin Paper Front/Thin Paper Back: 5 mm

(3) Setting item

Front/Back:

- "4 mm"
- 5 mm
- 7 mm

Thin Paper Front/Thin Paper Back:

- 4.0 mm to 10.0 mm (Step: 1.0 mm)

7.7.7 Printer Adjustment-Vertical Adjustment

- It will be displayed only when the following setting is set to "Level 2."
  [Service Mode] -> [Enhanced Security] -> [Administrator Feature Level]

(1) Use

- To synchronize the paper transport speed with the image writing speed.
- The printed image on the copy distorts (stretched, shrunk).
- When the printed image on the copy is stretched in the sub scan direction.
- Able to make an individual adjustment for each paper type of normal/thin paper, thick 1/1+, thick 2, thick 3 and thick 4.

(2) Setting range

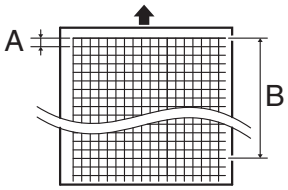

- Width A and width B on the test pattern produced should fall within the following target.
  NOTE
  - **Width A: equivalent to one grid**
  - **Width B: equivalent to 48 grids**

Target	A: 8.13 ± 0.2 mm
	B: 390.14 ± 2.0 mm
Setting range	A: -7 to +7
	B: -7 to +7

(3) Procedure

1. Load manual bypass tray with A3 or 11 x 17 plain paper.
2. Call the Administrator Settings to the screen.
3. Touch these keys in this order: [System Settings] -> [Expert Adjustment] -> [Vertical Adjustment].
4. Select [Normal/Thin Paper].
5. Press the Start key to let the machine produce a test pattern.
6. Check width A (equivalent to one grid) and width B (equivalent to 48 grids) on the test pattern.
7. Touch these keys in this order: [System Settings] -> [Expert Adjustment] -> [Printer Adjustment] -> [Vertical Adjustment].
8. If width of A or B falls outside the target, change the setting using the [+] / [-] keys.
   - If width A or B is longer than the target, make the setting value smaller than the current one.
   - If width A or B is shorter than the target, make the setting value greater than the current one.
9. Press the Start key to let the machine produce a test pattern again.
10. Check width A and width B on the test pattern.
11. If width A or B falls outside the target, change the setting value and make a check again.
12. If width A or B falls within the target, touch [OK].
13. Following the same procedure, adjust for thick paper.

7.7.8 Printer Adjustment-Media Adjustment

(1) Use

- Adjust the 2nd image transfer output (ATVC) on the 1st page and the 2nd page for each paper type.
- This function is provided to open [Transfer Voltage Fine Adj] -> [2nd transfer adj.] of Service Mode up to administrator and the fine-adjusted value is reflected in the Service Mode setting.
- To use when the transfer failure occurs.

- Touching [Auto] activates the 2nd image transfer amperage upper and lower limit control. In this case, the machine uses the voltage determined by the transfer voltage control and the 2nd image transfer voltage fine adj value does not take effect.

(2) Default setting

- Auto

(3) Setting item

- -8 to +7 (Step: 1*)
- *: step is equivalent to 100 V.
- “Auto”

(4) Procedure

1. Call the Administrator Settings to the screen.
2. Touch these keys in this order: [Expert Adjustment] -> [Printer Adjustment] -> [Media Adjustment].
3. Select the image side (1st or 2nd side) where transfer failure occurs.
   NOTE
   - **For envelopes, OHP film and banner thick paper, only [Front] can be selected.**
4. Select the paper type with the transfer failure.
5. Enter the new setting from the [+] / [-] keys.
   - To increase the ATVC value (in the direction of a foggier image), increase the setting value.
   - To decrease the ATVC value (in the direction of a less foggy image), decrease the setting value.
6. Touch [OK] to validate the setting value.
7. Check the print image for any image problem.
   NOTE
   - **To automatically control the 2nd image transfer output without using the 2nd image transfer voltage fine adj value, press [Auto].**

7.7.9 Finisher Adjustment-Center Staple Position

(1) Use

- Adjust the stapling position for each paper size when printing with the center staple function.

(2) Setting range

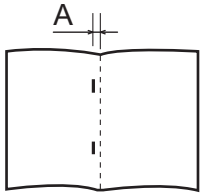

- Width A should fall within the following target.

Target	0 ± 1.0 mm
Setting range	-10.0 mm to +10.0 mm (1 step: 0.1 mm)

(3) Procedure

NOTE
- **After half-fold position adjustment, make this center staple position adjustment.**

1. Place five sheets of originals on the ADF.
2. Make a set of copy in the saddle stitching mode.
3. Check the amount of horizontal deviation (width A) between the staple and the half fold positions on the set of copy.
4. If width A is out of the target, make the following adjustment.
5. Call the Administrator Settings to the screen.
6. Touch [System Settings] -> [Expert Adjustment] -> [Finisher Adjustment] -> [Center Staple Position].
7. Touch the paper size where staple position is adjusted.
8. Look at the copy and adjust the staple position with the [+] / [-] key.

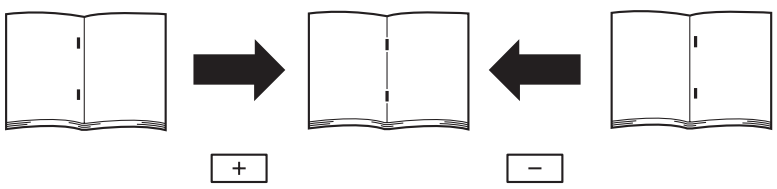

NOTE
- **The adjustment setting value used for each paper size is the value set with [All] plus the value set for each paper size.**

9. Touch [OK].
10. Make another set of copy sample and check the amount of width A.
11. Following the same procedure, adjust for each paper size.

7.7.10 Finisher Adjustment-Half-Fold Position

(1) Use

- Use this adjustment to adjust the half-fold position in half-fold printing.

(2) Setting range

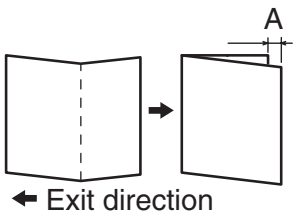

- Width A should fall within the following target.

Target	A = Less than 1.0 mm
Setting range	-10.0 mm to +10.0 mm (1 step: 0.1 mm)

(3) Procedure

1. Place two sheets of originals on the ADF.
2. Make a copy in the folding mode.
3. Fold the copies along the crease.
4. Measure the amount of width A.
5. If width A is out of the target, make the following adjustment.
6. Call the Administrator Settings to the screen.
7. Touch [System Settings] -> [Expert Adjustment] -> [Finisher Adjustment] -> [Half-Fold Position].
8. Touch the paper size where half-fold position is adjusted.
9. Look at the copy and adjust the half-fold position with the [+] / [-] key.

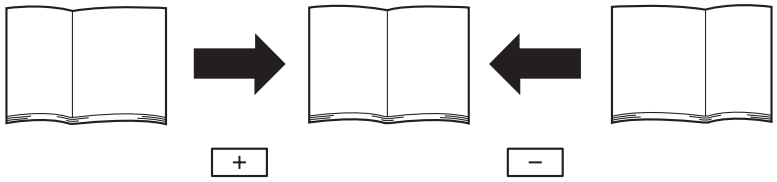

NOTE

- **The adjustment setting value used for each paper size is the value set with [All] plus the value set for each paper size.**

10. Touch [OK].
11. Make another set of copy sample and check the amount of width A.
12. Following the same procedure, adjust for each paper size.

7.7.11 Finisher Adjustment-1st Tri-Fold Position Adjustment/2nd Tri-Fold Position Adjustment

(1) Use

- To adjust the positions of the 1st Tri-fold and 2nd Tri-fold for the Tri-fold printing.

(2) Setting range

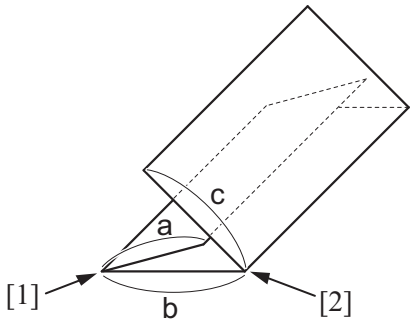

[1] Position of the first tri-fold	[2] Position of the second tri-fold

- The tri-fold widths "a" and "b" should fall within the following target.

Target	A4S	• Length a: 95 mm ± 2 mm • Length b: 102 mm ± 2 mm
	8.5 x 11S	• Length a: 89.4 mm ± 2 mm • Length b: 96.0. mm ± 2 mm
	16KS	• Length a: 88.0 mm ± 2 mm • Length b: 92.0 mm ±2 mm

Setting range	-10.0 mm to +10.0 mm (Step = 0.1 mm)

(3) Procedure

- Make copies in the tri-fold mode.
- Check whether the tri-fold widths "a" and "b" of ejected copy samples are within the target. Complete the adjustment, if the measured values fall within the target.

(a) If the width "a" is out of the target:

- Call the Administrator Settings to the screen.
- Touch these keys in this order: [System Settings] -> [Expert Adjustment] -> [Finisher Adjustment] -> [1st Tri-Fold Position Adjustment].
- Select a paper size where the tri-fold position needs adjustment.
- While looking at the copy samples, touch [+] or [-] to adjust the tri-fold position.
  - To increase the width a, enter a positive value with [+].
  - To decrease the width a, enter a negative value with [-].
- Touch [OK].
- Make copies in the tri-fold mode and check for possible deviation from the specified position.

(b) If the width “b” is out of the target:

- Call the Administrator Settings to the screen.
- Touch these keys in this order: [System Settings] -> [Expert Adjustment] -> [Finisher Adjustment] -> [2nd Tri-Fold Position Adjustment].
- Select a paper size where the tri-fold position needs adjustment.
- While looking at the copy samples, touch [+] or [-] to adjust the tri-fold position.
  - To increase the width b, enter a positive value with [+].
  - To decrease the width b, enter a negative value with [-].
- Touch [OK].
- Make copies in the tri-fold mode and check for possible deviation from the specified position.

7.7.12 Finisher Adjustment-Punch Horizontal Position Adjustment

(1) Use

- To change the horizontal position of the punch holes.

(2) Setting range

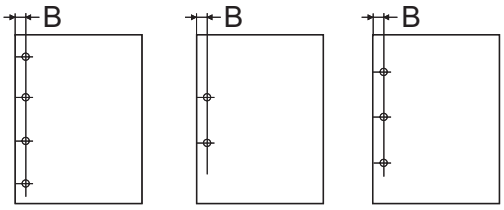

- Width B should fall within the following target.

Target	• B = 9.5 mm ± 1.0 mm (2-3 hole) • B = 11.0 mm ± 1.0 mm (2-4 hole) • B = 10.5 mm ± 1.0 mm (SWE4 hole)
Setting range	-5.0 mm to +5.0 mm (1 step: 0.1 mm)

(3) Procedure

1. Make a copy sample in the punch mode.
2. Check to see if the width from the paper end to the center of the punch hole in the copy sample falls within the target. Complete the adjustment, if the measured value falls within the target.
3. Call the Administrator Settings to the screen.
4. Touch [System Settings] -> [Expert Adjustment] -> [Finisher Adjustment] -> [Punch Horizontal Position Adjustment].
5. Touch the paper type where punch horizontal position is adjusted.
6. Look at the copy and adjust the punch horizontal position with the [+] / [-] key.
   - To make width B greater: Enter the value of [+]
   - To make width B smaller: Enter the value of [-]

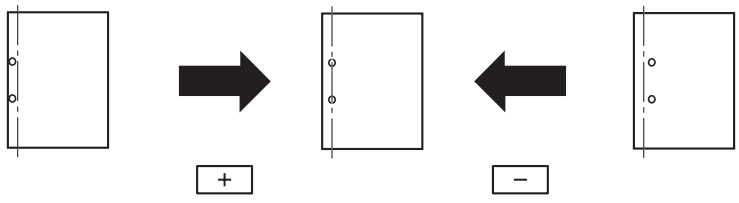

7. Touch [OK].
8. Make another set of copy sample and check the amount of width B.

7.7.13 Finisher Adjustment-Paper Alignment Plate Settings

- It will be displayed only when the optional finisher FS-533 is installed.

(1) Use

- Use this feature to fine adjust the aligning plate that aligns ejected paper.

(2) Procedure

1. Call the Administrator Settings to the screen.
2. Touch [System Settings] -> [Expert Adjustment] -> [Finisher Adjustment] -> [Paper Alignment Plate Settings].
3. Select the [Paper Alignment Plate Pos.(Back)] or [Paper Alignment Plate Pos.(Front)].
   - The default setting is 0.0 mm.
   - Setting range: -10.0 mm to +10.0 mm (in 0.1 mm increments)
4. Set the target using the [+]/[-] keys.
5. Touch [OK].

7.7.14 Finisher Adjustment-Punch Regist Loop Size Adjustment

(1) Use

- Adjusts the punch loop size used for paper exited from the main body.
- To address problems such as misaligned punch holes, wrinkled paper, and jam at the punch registration section.

(2) Procedure

1. Call the Administrator Settings to the screen.
2. Touch [System Settings] -> [Expert Adjustment] -> [Finisher Adjustment] -> [Punch Regist Loop Size Adjustment].
3. Touch the place and the paper size where punch regist loop size is adjusted.
4. Set the target using the [+] / [-] keys.
   - Misaligned punched holes: Enter the value of [+]
   - Wrinkled paper: Enter the value of [-]
5. Touch [OK].

7.7.15 Density Adjustment

(1) Use

- Adjust the density of images that are printed on thick paper, OHP transparencies, or envelops for each paper type.

[Thick Type1]	Thick 1/1+
[Thick Type2]	Thick2/3/4/Special Paper/Transparency/Envelope/1200dpi

(2) Default setting

- 0

(3) Setting range

- -5 to +5 (Step: 1)

(4) Procedure

1. Call the Administrator Settings to the screen.
2. Touch [System Settings] -> [Expert Adjustment] -> [Density Adjustment].
3. Select a thick paper that need to be adjusted.
4. Touch the Lighter or Darker key to correct the image density.
   - Light color: Touch the Darker key.
   - Dark color: Touch the Lighter key.

(5) Black Image Density

(a) Use

- To fine-adjust the density of the printed image for a black print.
- To vary the density of the printed image of a black print.

(b) Default setting

- 0

(c) Setting range

- -2 to +2 (Step: 1)

(d) Procedure

- Call the Administrator Settings to the screen.
- Touch [System Settings] -> [Expert Adjustment] -> [Density Adjustment] -> [Black Image Density].
- Touch the Lighter or Darker key as necessary to correct the image density.
  - If the black is light, touch the Darker key.
  - If the black is dark, touch the Lighter key.

7.7.16 Image Stabilization

(1) Image Stabilization Only-Initialize+Image Stabilization

(a) Use

- To carry out an image stabilization sequence after the historical data of image stabilization control has been initialized.
- Use if an image problem persists even after [Gradation Adjustment] has been executed.
- Use if tone reproduction and maximum density are faulty even after image stabilization has been executed.

(b) Procedure

1. Call the Administrator Settings to the screen.
2. Touch [System Settings] -> [Expert Adjustment] -> [Image Stabilization] -> [Image Stabilization Only] -> [Initialize+Image Stabilization].
3. Press the Start key to start Stabilizer.
   The Start key turns orange and stays lit up orange during the Stabilizer sequence.
4. Stabilizer is completed when the Start key turns blue.

(2) Image Stabilization Only-Image Stabilization Only

(a) Use

- The image stabilization sequence is carried out without clearing the historical data of image stabilization control.
- Use if an image problem persists even after [Gradation Adjustment] has been executed.
- When [Max Image Density Adj] and [Image Background Adj] of Service Mode are changed.

(b) Procedure

1. Call the Administrator Settings to the screen.
2. Touch [System Settings] -> [Expert Adjustment] -> [Image Stabilization] -> [Image Stabilization Only] -> [Image Stabilization Only].
3. Press the Start key to start Stabilizer.
   The Start key turns orange and stays lit up orange during the Stabilizer sequence.
4. Stabilizer is completed when the Start key turns blue.

7.7.17 Paper Separation Adjustment

(1) Use

- By changing the period between the activation of the registration roller and the 2nd image transfer output, the paper separation position can be adjusted for the 1st and 2nd sides of paper.
- To adjust the balance between paper separation and image transfer performances by changing the paper separation position in duplex printing of thin paper (52 to 59 g/m^2) in hot and humid conditions.

(2) Default setting

- 0

(3) Setting range

- -10 mm to +10 mm (step: 0.1 mm)

(4) Procedure

1. Call the Administrator Settings to the screen.
2. Touch [System Settings] -> [Expert Adjustment] -> [Paper Separation Adjustment].
3. Select [Front], [Back], [Thin Paper Front], or [Thin Paper Back].
4. Change the setting value with [+] or [-] key.
   - Priority on paper separation performance: Increase the setting value
   - Priority on image transfer performance: Decrease the setting value
5. Touch [OK] to determine the setting value.
6. Make a print and check the image.

7.7.18 Gradation Adjustment

- It will not be displayed when the following setting is set to “ON.”
  [Service Mode] -> [Imaging Process Adjustment] -> [Grad/Dev AC Bias V Selection]
- This menu is unavailable when the key counter is not inserted while only the key counter is set to set by [Service Mode] -> [Billing Setting] -> [Management Function Choice].

(1) Use

- To make an automatic adjustment of gradation based on the test pattern produced and the readings taken by the scanner.
- Use this adjustment when reproduction of gradations and density has deteriorated.
- The drum unit or developing unit has been replaced.
- The transfer belt unit has been replaced.

Print	The adjustment conforms to FEET (non-screen). And images and lines should be corrected with placing match value on the reproducibility (priority on resolution).
Copy	Priority is to increase the number of images that can be stored in the memory (priority on compression). And images should be corrected with making a priority on the graduation (priority on graduation).

(2) Procedure

NOTE

- **When executing the gradation adjustment, make sure to use the paper for copy (white).**

1. Touch [Image stabilization Only] and the Start key to perform image stabilization.
   NOTE
   - **Before executing Gradation adjust, be sure to perform Stabilizer.**
2. Call the Administrator Settings to the screen.
3. Touch [System Settings] -> [Expert Adjustment] -> [Gradation Adjustment].
4. Select Print or Copy and select the paper size on which test pattern is printed.
5. Press the Start key to let the machine produce a test pattern.
6. Place the test pattern produced on the original glass.
7. Place ten blank sheets of A3/11 x 17 paper on the test pattern and lower the original cover.
8. Press the Start key. (The machine will then start scanning the test pattern.)
9. Touch [OK] and repeat steps from 4 through 8 twice (a total of three times).

NOTE

- **If the image is faulty, perform the troubleshooting procedures for image problems.**

7.7.19 Scanner Area

- Use the following test chart for the adjustment of the scanner section.
- If the test chart is not available, a scale may be used instead.
- It will be displayed only when the following setting is set to “Level 2.”
  [Service Mode] -> [Enhanced Security] -> [Administrator Feature Level]
- This menu is unavailable when the key counter is not inserted while only the key counter is set to Set by [Service Mode] -> [Billing Setting] -> [Management Function Choice].

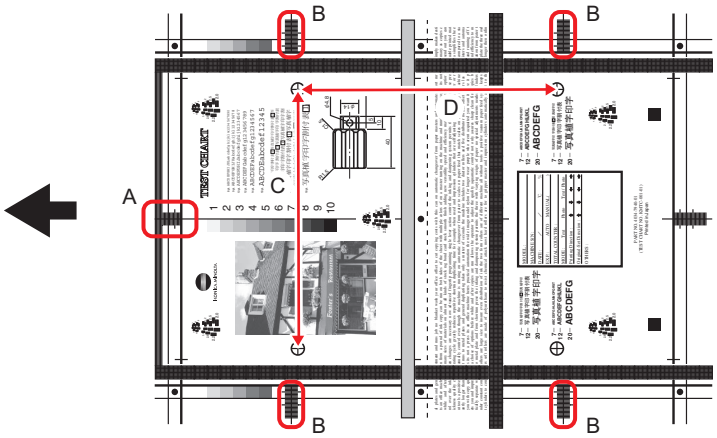

Adjustment item	Ref.
A: Scanner Adjustment: Leading Edge	I.7.7.20 Scanner Area-Scanner Adjustment: Leading Edge
B: Scanner Adjustment: Centering	I.7.7.21 Scanner Area-Scanner Adjustment: Centering
C: Horizontal Adjustment	I.7.7.22 Scanner Area-Horizontal Adjustment
D: Vertical Adjustment	I.7.7.23 Scanner Area-Vertical Adjustment

7.7.20 Scanner Area-Scanner Adjustment: Leading Edge

(1) Use

- To adjust variations in mounting accuracy and sensitivity of the scanner home sensor and in mounting accuracy of the original width scale by varying the scan start position in the main scan direction.
- When the original glass is replaced.
- When the original width scale is replaced.
- The scanner home sensor has been replaced.

(2) Setting range

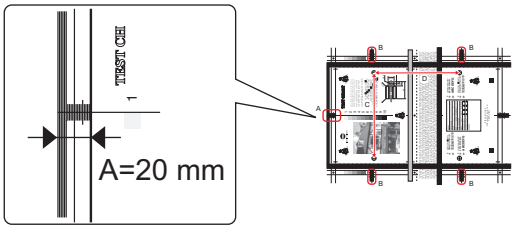

- A width on the test chart and one on the test pattern are measured and adjusted so that the difference of A width satisfies the target shown below.
- An adjustment must have been completed correctly of [Leading Edge Adjustment] of the Printer Adjustment.

Target	Width A: ± 1.5 mm

Setting range	-3.0 to +3.0 (in 0.1 mm increments)

(3) Procedure

1. Call the Administrator Settings to the screen.
2. Touch [System Settings] -> [Expert Adjustment] -> [Scanner Adjustment] -> [Scanner Adjustment: Leading Edge].
3. Position the test chart correctly so that the original reference point is aligned with the scale.
4. Press the Start key to make a copy.
5. Check point A on the image of the test pattern.
6. If the image falls outside the target, change the setting using the [+] / [-] key.
   - If the copy image is less than the target, increase the setting value.
   - If the copy image exceeds the target, decrease the setting value.
7. Press the Start key to make another test pattern.
8. Check the image on the test pattern to see if the specifications are met.
9. Make adjustments until the targets are met.

7.7.21 Scanner Area-Scanner Adjustment: Centering

(1) Use

- To adjust part-to-part variations in accuracy of scanner parts and their mounting accuracy by varying the scan start position in the main scan direction.
- When the CCD unit is replaced.
- When the original glass is replaced.

(2) Setting range

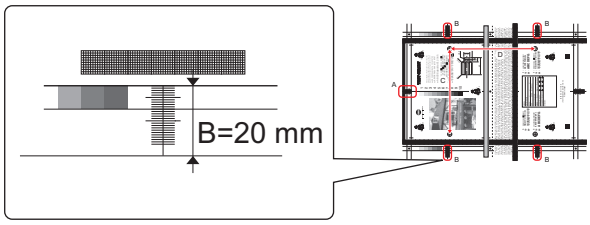

- B width on the test chart and one on the test pattern are measured and adjusted so that the difference of B width satisfies the target shown below.
- An adjustment must have been completed correctly of [Leading Edge Adjustment] of the Printer Adjustment.

Target	Width B: ± 1.5 mm
Setting range	-5.7 to +5.7 (in 0.1 mm increments)

(3) Procedure

1. Call the Administrator Setting to the screen.
2. Touch [System Settings] -> [Expert Adjustment] -> [Scanner Adjustment] -> [Scanner Adjustment: Centering].
3. Position the test chart correctly so that the original reference point is aligned with the scale.
4. Press the Start key to make a copy.
5. Check point B on the image of the test pattern.
6. If the image falls outside the target, change the setting using the [+] / [-] key.
   - If the copy image is less than the target, increase the setting value.
   - If the copy image exceeds the target, decrease the setting value.
7. Press the Start key to make another test pattern.
8. Check point B of the image on the test pattern to see if the specifications are met.
9. Make adjustments until the targets are met.

7.7.22 Scanner Area-Horizontal Adjustment

(1) Use

- To adjust the zoom ratio in the main scan direction for the scanner section.
- The CCD unit has been replaced.

(2) Setting range

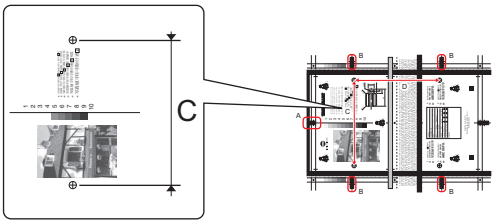

- Measure C width on the test chart and on the test pattern, and adjust the gap to be within the following target.

Target	± 1.0 mm
Setting range	0.990 to 1.010 (in 0.001 increments)

- * Standard size when using a scale: 200.0 mm

(3) Procedure

1. Call the Administrator Settings to the screen.
2. Touch [System Settings] -> [Expert Adjustment] -> [Scanner Adjustment] -> [Horizontal Adjustment].
3. Position the test chart correctly so that the original reference point is aligned with the scale.
4. Press the Start key to make a test pattern.
5. Check the C width on the image of the test pattern.
6. If the image falls outside the target, change the setting using the [+] / [-] key.
   - If the C width on the copy sample is less than one on test chart, increase the setting.
   - If the C width on the copy sample exceeds one on test chart, decrease the setting.
7. Press the Start key to make another test pattern.
8. Check the image on the test pattern to see if the specifications are met.
9. Make adjustments until the targets are met.

7.7.23 Scanner Area-Vertical Adjustment

(1) Use

- To adjust the zoom ratio in the sub scan direction for the scanner section.

(2) Setting range

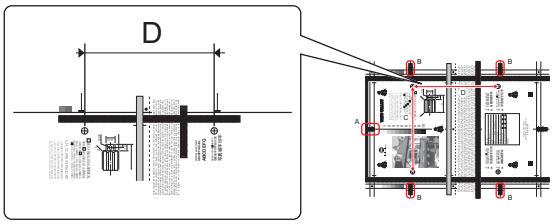

- Measure D width on the test chart and on the test pattern, and adjust the gap to be within the following target.

Target	± 1.5 mm
Setting range	0.990 to 1.010 (in 0.001 increments)

- * Standard size when using a scale: 300.0 mm

(3) Procedure

1. Call the Administrator Settings to the screen.
2. Touch [System Settings] -> [Expert Adjustment] -> [Scanner Adjustment] -> [Vertical Adjustment].
3. Position the test chart correctly so that the original reference point is aligned with the scale.
4. Press the Start key to make a test pattern.
5. Check the D width on the image of the test pattern.
6. If the image falls outside the target, change the setting using the [+] / [-] key.
   - If the D width on the copy sample is less than one on test chart, increase the setting.
   - If the D width on the copy sample exceeds one on test chart, decrease the setting.
7. Press the Start key to make another test pattern.
8. Check the image on the test pattern to see if the specifications are met.
9. Make adjustments until the targets are met.

7.7.24 ADF Adjustment

- It will be displayed only when the following setting is set to “Level 2.”
  [Service Mode] -> [Enhanced Security] -> [Administrator Feature Level]

(1) Centering

(a) Use

- To adjust the read position in the main scanning direction.
- When the result is Unable in the [Centering Auto Adjustment].
- When ADF has been replaced.

(b) Setting range

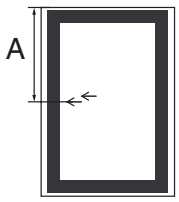

- The difference in the widths of A between the chart and the copy sample should fall within the following target.

Target	0 ± 2.0 mm
Setting range	-4.4 mm to +4.4 mm (1 step: 0.1 mm)

(c) Procedure

1. Place the chart in the document feed tray (with the side having an arrow facing up).
2. Make a full size copy of the chart.
3. Check that the difference in the widths of A between the chart and the copy sample falls within the target.
4. Call the Administrator Settings to the screen.
5. Touch [System Settings] -> [Expert Adjustment] -> [ADF Adjustment] -> [Centering].
6. Look at the copy and make adjustment with the [+] / [-] key.
   - If the difference in the widths of A is greater than the target, enter the [+] value.
   - If the difference in the widths of A is smaller than the target, enter the [-] value.
7. Touch [OK].
8. Make a copy of the chart again and check that the difference in the widths of A falls within the target.

(2) Original Stop Position

(a) Use

- To manually adjust the original stop position and the read position in each of the ADF modes.
- When the result is Unable in the [Auto Adj. of Stop Position].

(b) Setting range

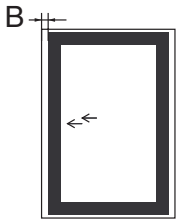

- The difference in the widths of B between the chart and the copy sample should fall within the following target.

Target	0 ± 2.0 mm
Setting range	-4.0 mm to +4.0 mm (1 step: 0.1 mm)

(c) Procedure

1. Place the chart in the document feed tray (with the side having an arrow facing up).
2. Make a full size copy of the chart.
   NOTE
   - **In the same way place the chart with the blank side facing up in the document feed tray in the duplex mode and make a copy. Check the difference in the widths of a between the chart and the second sided surface of the copy sample.**
3. Check that the difference in the widths of B between the chart and the copy sample falls within the target.
4. Call the Administrator Settings to the screen.
5. Touch [System Settings] -> [Expert Adjustment] -> [ADF Adjustment] -> [Original Stop position].
6. Look at the copy and adjust [Front] or [Back] with the [+] / [-] key.
   - If the difference in the widths of B is greater than the target, enter the [+] value.
   - If the difference in the widths of B is smaller than the target, enter the [-] value.
7. Touch [OK].
8. Make a copy of the chart again and check that the difference in the widths of B falls within the target.

(3) Centering Auto Adjustment

(a) Use

- To automatically adjust the read position in the main scanning direction.
- When ADF has been replaced.

(b) Procedure

1. Call the Administrator Settings to the screen.
2. Touch [System Settings] -> [Expert Adjustment] -> [ADF Adjustment] -> [Centering Auto Adjustment].
3. Place the chart in the document feed tray (with the side having an arrow facing up).
4. Press the Start key.
5. Make sure that result is OK. Then, touch [New].
6. Touch [Close].

NOTE

- **If the result is Unable:**
  Check and correct the skew of the document.
  Manually correct the value of [Original Stop Position].
  I.7.7.24.(2) Original Stop Position

(4) Auto Adj. of Stop Position

(a) Use

- To automatically adjust the read position for the sub scanning direction.
- To check skew feed.
- When ADF has been replaced.

(b) Procedure

1. Call the Administrator Settings to the screen.
2. Touch [System Settings] -> [Expert Adjustment] -> [ADF Adjustment] -> [Auto Adj. of Stop Position].
3. Touch [Front] or [Back].
4. Place the chart in the document feed tray.
   - [Front]: Set the chart with its arrow side facing upward.
   - [Back]: Set the chart with its blank side facing upward.
5. Press the Start key.
6. Make sure that result is OK. Then, touch [New].
7. Touch [Close].

NOTE

- **If the result is Unable:**
  Check and correct the skew of the document.
  Manually correct the value of [Original Stop Position].
  I.7.7.24.(2) Original Stop Position

7.7.25 Line Detection-Prior Detection Setting (Front Side, Back Side)

- Back Side can be set only when the optional DF-701 is mounted.

(1) Use

- To set whether or not to perform pre-detection of stain on the ADF original glass (or the CIS glass).
- To set the detection level of the pre-detection of stain on the ADF original glass (or the CIS glass).
- To set how to display the warning when stain on the ADF original glass (or the CIS glass) is detected.
- Use when changing the display of the warning which requests the cleaning of the stain on the glass detected by the pre-detection of the lines.

TYPE1	Warning will be displayed by the maintenance mark. (warning code: D-1 (Front Side), D-3 (Back Side))
TYPE2	Warning will be displayed on the message area on the basic screen.
TYPE3	Warning will be displayed on all screens.
OFF	Warning will not be displayed.

- Use when changing the detection level for the pre-detection of stain on the original glass.

Low	Stain on the glass will not be detected easily.
Std.	Normal detection level
High	Stain on the glass will easily be detected.

- Warning Display Time (Back Side Only)

Warning Detection	Displays the warning whenever contamination is detected.
During the Back Side Scan	Displays the warning only when back side scanning mode is selected.

(2) Default setting

- Yes

(3) Setting item

- “Yes”
- No

NOTE

- **[Warning Display], [Detection Level], and [Warning Display Time] (Back Side Only) can be set when “Yes” is selected.**

Warning Display	**Default setting**	**TYPE1**
	Setting item	**• “TYPE1” • TYPE2 • TYPE3 • OFF**
Detection level	**Default setting**	**Std.**
	Setting item	**• Low • “Std.” • High**
Warning Display Time (Back Side Only)	**Default setting**	**• During the Back Side Scan**
	Setting item	**• Warning Detection • “During the Back Side Scan”**

- **Be aware that selecting “No” and performing the pre-detection with the following setting will display “NG.”**
  [Service Mode] -> [Machine] -> [ADF Scan Glass Contamination]
- **When “No” is selected, the original glass cleaning operation after the job ends does not operate.**

7.7.26 Line Detection-Feed Cleaning Settings

(1) Use

- To set the operation for detection and removing operation of stain on the ADF original glass when feeding the original.
- Use when changing the operation for detection and removing operation of stain on the ADF original glass when feeding the original.

Do Not Clean	The DF original glass cleaning brush will stop rotating when the original is fed, and will not perform removing the stain.
Clean	The DF original glass cleaning brush will rotate between originals when feeding the original.

(2) Default setting

- Clean

(3) Setting item

- “Clean”
- Do Not Clean

7.7.27 Trail Edge Adjust

(1) Use

- To change the conveyance speed by the registration motor and executes fine-tune when an error in zoom ratio is detected at the rear edge of the print image on the thick paper.
- To use when an error in zoom ratio occurs at the image rear edge.
- This can be set for each paper type of normal/thin paper, thick 1/1+, and thick 2/3/4.

(2) Procedure

1. Call the Administrator Settings to the screen.
2. Touch [System Settings] -> [Expert Adjustment] -> [Trail Edge Adjust].
3. Load manual bypass tray with A3/11 x 17 or A4/8 $^{1}/_{2}$ x 11 normal paper.
4. Select a paper type that is set on the manual bypass tray.
5. Press the Start key.
6. Compare the error in zoom ratio at the rear edge side of the printed test paper to that at the leading edge side, and conduct the following adjustment if the error occurs at the rear edge side.
7. Using the [+] / [-] key, change the setting value as necessary.
   - Reduce the set value (to reduce the conveyance speed) if the zoom ratio at the rear edge side is larger.
8. Produce another test pattern and make sure that there is no deviation.

Check Procedure

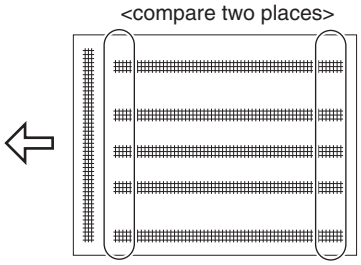

7.7.28 User Paper Settings

- It will be displayed only when the following setting is set to “Level 2.”
  [Service Mode] -> [Enhanced Security] -> [Administrator Feature Level]

(1) Use

- To set and register individual user paper that includes different basic weight and transfer output fine adjustment data.
- To register a paper type that is suitable for customer’s intended use and use environment.
- The feature available from [Service Mode] -> [System 2] -> [User Paper Settings] is extended to Administrator. However, the fusing temperature setting is not possible in Administrator Settings.
- The user paper registration keys and corresponding paper types are as follows:
  - User Paper 1, 2: Plain paper
  - User Paper 3: Thick 1
  - User Paper 4: Thick 1+
  - User Paper 5: Thick 2
  - User Paper 6: Thick 3

  NOTE
  - **[Service Mode] -> [System 2] -> [Software SW] -> [Switch No.: 147 HEX Assignment 04] allows the paper type for "User Paper 1" and "User Paper 2" to be changed. The change made of the paper type with the software SW is not, however, reflected in the paper type displayed on the screen and the screen shows [Plain paper], not [Thin paper] or [Plain paper/ Recycled paper].**
  - **This function can be used to reduce occurrence of blurred image, when the use of the user paper function does not eliminate blurred image on thin paper and recycled paper.**
  - **Following list the paper type assigned to each user paper registration key after the change.**

User Paper 1	**Thin paper**
User Paper 2	**Plain paper/Recycled paper**
User Paper 3	**Thick 1**
User Paper 4	**Thick 1+**
User Paper 5	**Thick 2**
User Paper 6	**Thick 3**

(2) Procedure

1. Call the Administrator Settings to the screen.
2. Touch [System Settings] -> [Expert Adjustment] -> [Forward] -> [User Paper Settings].
3. Select the desired key from [User Paper 1] to [User Paper 6] to register user paper.
4. Select [Basic Weight] and enter a value with the [+] / [-] key.
5. Select one from the following; [Media Front] or [Media Back]. Enter a 2nd transfer output value with the [+] / [-] key.
   Setting range: -8 to +7 (1 step: 1 increment or decrement)
6. Load the tray with A4S or 8 $^{1}/_{2}$ x 11S paper.
7. Touch [Test Pattern Output]. Specify a paper feed tray and select either 1st side or 2nd side.
8. Press the Start key and check the image of the output test pattern. If the image is not acceptable, adjust the settings, output and check a test pattern again.

(3) Test pattern in user paper settings

- The printable test pattern for user paper settings is provided to ease determining the most appropriate 2nd transfer output value used when customizing user paper.
- This test pattern changes output voltage as shown below based on the standard voltage A (voltage determined by the 2nd image transfer auto transfer voltage control) on a sheet of paper.

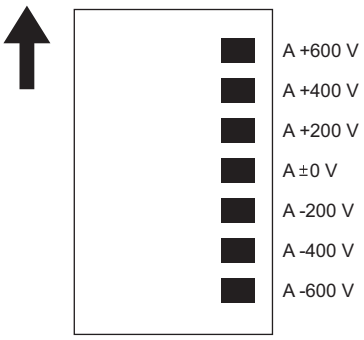

A: standard voltage

7.7.29 Erase Adjustment-Non-Image Area Erase Operation Settings

(1) Use

- Configure Non-Image Area operation settings.

Auto	Automatically detects the background density of the original, and selects either [Bevel] or [Rectangular] accordingly.
Specify	Allows you to manually specify an erase method and original density. As an erase method, select [Bevel] or [Rectangular]. Specify an original density from five levels.

(2) Default setting

- Specify

(3) Setting item

- Auto
- “Specify”

7.7.30 PS Designer Settings

(1) Use

- Selecting [Yes] does not use a simulation profile to output data.
- Selecting [No] uses a simulation profile based on your processing to correct an entered image with the same density as when an image is output using the PCL driver.

(2) Default setting

- No

(3) Setting item

- Yes
- “No”

7.8 System Settings-List/Counter

7.8.1 Management List

- It will not be displayed when the following setting shows that vendor 2 is mounted.
  [Service Mode] -> [Billing Setting] -> [Management Function Choice]
  (It will be displayed when the key counter is mounted or when the following setting shows that switch No.33 is set to [01] at HEX assignment.
  [Service Mode] -> [System 2] -> [Software Switch Setting])

(1) Job Settings List

(a) Use

- To output the value set by the setting menu.

(b) Procedure

1. Touch [Job Settings List].
2. Select the paper tray.
3. Select 1-Sided or 2-Sided print, and touch the Start key.

7.8.2 Paper Size/Type Counter

(1) Use

- To register the combination of the specific paper size and the paper type, and to set the count.

(2) Procedure

1. Press a key out of 1 to 10 registration keys.
2. Select the paper type.
3. Touch the paper size key to select the paper size.

7.8.3 Meter Counter List

- Setting will be available only when the following setting shows that management device 2 or vendor 2 is mounted.
  [Service Mode] -> [Billing Setting] -> [Management Function Choice]

(1) Use

- To output the meter counter list.
- To print out the list in this setting because counter list cannot be printed when vendor is mounted.
  Menu -> [Counter]

(2) Procedure

1. Touch [Meter Counter List].
2. Select the paper tray.
3. Select 1-Sided or 2-Sided print, and touch the Start key.

7.8.4 Check Consumables List

- Setting will be available only when the following setting shows that either authentication device 2, management device 2, vendor 2 is mounted.
  [Service Mode] -> [Billing Setting] -> [Management Function Choice]

(1) Use

- To output the consumable life list.
- To print out the list in this setting because the list cannot be printed when vendor is mounted.
  [Utility] -> [Check Consumable Life]

(2) Procedure

1. Touch [Check Consumable List].
2. Select the paper tray.
3. Select 1-Sided or 2-Sided print, and touch the Start key.

7.8.5 Transmission Meter Count and Device Information

(1) Use

- To select whether or not to allow the transmission of the information on the function use frequency counter and machine configuration information.
- The counter information is collected via CS Remote Care.
- Though this setting is set to [Allow], the information is not sent if [Service Mode] -> [System 2] -> [Acquiring Settings] is set to “OFF.”

(2) Default setting

- Restrict

(3) Setting item

- Allow

- "Restrict"

7.8.6 TX Operation Log Output

- This is displayed only when [Administrator Settings] -> [Security Settings] -> [Security Details] -> [TX Operation Log] is set to "Save."

(1) Use

- To select whether or not to output acquired TX operation logs.
- The logs can be printed or stored into a USB flash drive.

(2) Procedure

- Select [All] or [Set Range] in [Output Date Range]. When selecting [Set Range], specify the start and end dates in [Set Output Date Range].
- Select [Print] or [Save to External Memory].

7.9 System Settings-Reset Settings

7.9.1 System Auto Reset

- Specify whether to reset all settings (except registered settings) when this machine has not been operated for a certain period of time.
- The keys specified by [Administrator Settings] -> [System Settings] -> [Registered Key Settings] is displayed.
- Screen Saver Function is displayed only when the following two conditions are met: The optional i-Option LK-101 v3 and upgrade kit UK-204 are enabled. The screen saver application is registered.

(1) Use

- To set the period of time until system auto reset starts functioning.

(2) Procedure

- To set the functions displayed during system auto reset.

(3) Default setting

- Priority Mode: Copy
- System Auto Reset Time: 1 min.
- Screen Saver Function: No Limit

(4) Setting item

Priority Mode
- Main Menu
- "Copy"
- Scan/Fax
- User Box
- Web Browser

System Auto Reset Time
- "1" to 9
- OFF

Screen Saver Function
- Enable
- "No Limit"

7.9.2 Auto Reset

(1) Use

- To set the period of time until auto reset starts functioning in "Copy", "Scan/Fax", "User Box", and "Web Browser."

(2) Default setting

- 1 min.

(3) Setting item

- 1 to 9
- No

7.9.3 Job Reset

(1) When Account is changed

- It will not be displayed when the following setting shows that authentication device 2 is mounted.
  [Service Mode] -> [Billing Setting] -> [Management Function Choice]
  (It will be displayed when the key counter is mounted.)

(a) Use

- Selects whether to reset (initialize) a machine when the key counter is unplugged, a magnetic card is pulled out, or user authentication/account track is set.
- To select not to reset to the default settings even when the accounts are changed through the use of a data management device.

(b) Default setting

- Reset

(c) Setting item

- "Reset"
- Do Not Reset

(2) When Original is set on ADF

(a) Use

- Select whether to reset the function when originals are placed on the ADF.

(b) Default setting

- Do Not Reset

(c) Setting item

- Reset
- "Do Not Reset"

(3) Next Job: Staple Setting

(a) Use

- To set whether to cancel the staple setting when the staple setting job started and the next job setting has become available.

(b) Default setting

- OFF

(c) Setting item

- ON
- "OFF"

(4) Next Job: Original Set/Bind Direction

(a) Use

- To set whether to cancel the original set/bind direction when the job (which original set/bind direction is set) started and the next job setting has become available.

(b) Default setting

- OFF

(c) Setting item

- ON
- "OFF"

(5) Next Job: Reset Data After Job

(a) Use

- To set whether to cancel the setting for scanning or transmitting fax when the scanning is finished or fax is transmitted, making the next job setting available.

(b) Default setting

- Reset All

(c) Setting item

- "Reset All"
- Reset Destination Only
- Confirm with User

(6) Default Basic/Enlarge Display Common Setting

(a) Use

- To configure default copy or scan/fax settings for basic/enlarge display mode.

(b) Default setting

- Do not Apply

(c) Setting item

- "Do not Apply"
- Apply to all

7.10 System Settings-User Box Settings

7.10.1 Delete Unused User Box

(1) Use

- To delete the unused box without data.

(2) Procedure

1. Touch [Delete Unused User Box].
2. Touch [Yes] on the Check screen.
3. Touch [OK].

7.10.2 Delete Secure Print Documents

(1) Use

- To delete the whole secure documents in the secure print user box.

(2) Procedure

1. Touch [Delete Secure Documents].
2. Touch [Yes] on the Check screen.
3. Touch [OK].

7.10.3 Auto Delete Secure Document

(1) Use

- To set whether or not to delete the secure documents in the box after a certain period of time. It also sets the period of time to store data.

(2) Default setting

- 1 day

(3) Setting item

- “1 day”
- 2 days
- 3 days
- 7 days
- 30 days
- Time (5 min. to 12 hours)
- Save

7.10.4 Encrypted PDF Delete Time

(1) Use

- Specifies whether to delete encrypted PDF data stored in the box after a lapse of a predetermined period of time.
  Sets the time period for which encrypted PDF data can be stored.

(2) Default setting

- 1 day

(3) Setting item

- “1 day”
- 2 days
- 3 days
- 7 days
- 30 days
- Time (5 min. to 12 hours)
- Save

7.10.5 ID & Print Delete Time

- This is displayed only when [Administrator Settings] -> [User Authentication/Account Track] -> [User Authentication Settings] -> [Administrative Settings] -> [ID & Print Settings] is set to “ON.”

(1) Use

- Specifies whether to delete ID & print job stored in the box after a lapse of a predetermined period of time.
  Sets the time period for which ID & print job can be stored.

(2) Default setting

- 1 day

(3) Setting item

- “1 day”
- 2 days
- 3 days
- 7 days

- 30 days
- Time (5 min. to 12 hours)
- Save

7.10.6 Document Hold Setting

(1) Use

- Selects whether to store the document again in the box after it was retrieved from the box.
- If the function is set to No, the document is automatically deleted after it was retrieved.

(2) Default setting

- No

(3) Setting item

- Yes
- "No"
- When selecting "Yes", select whether or not to display the delete confirmation screen when the document is retrieved.

7.10.7 External Memory Function Settings

(1) Use

- This operation enables or disables functions using an external memory connected to this machine.
- Capability to enable [Save Document], [Print Document] and [External Memory Document Scan] separately.

Save Document	A function that saves scanned documents into the external memory in the box mode.
Print Document	A function that prints and sends documents saved in the external memory in the box mode.
External Memory Document Scan	A function that saves files imported from the external memory into User Box in User Box mode.

(2) Default setting

- Save Document: OFF
- Print Document: ON
- External Memory Document Scan: OFF

(3) Setting item

Save Document
- ON
- "OFF"

Print Document
- "ON"
- OFF

External Memory Document Scan
- ON
- "OFF"

7.10.8 Allow/Restrict User Box

(1) Use

- Specify whether to release functions so that the user can create, edit, or delete a User Box.

(2) Default setting

- Allow

(3) Setting item

- "Allow"
- Prohibit

7.10.9 ID & Print Delete after Print Setting

(1) Use

- Select whether to check that the document saved in the ID & Print User Box has been deleted after printed.

(2) Default setting

- Confirm with User

(3) Setting item

- "Confirm with User"
- Always Delete

7.10.10 Document Delete Time Setting

(1) Use

- This function enables the administrator to specify the time to delete a document from a User Box when you cannot specify the document deletion time.

(2) Default setting

- No

(3) Setting item

- Yes
- “No”
- When automatically specifying the document deletion time, select [Yes] and set the deletion time.

7.10.11 Document in MFP Shared Folder Delete Time Setting

- This option is displayed when [Administrator Settings] -> [Network Settings] -> [SMB Settings] -> [SMB Server Settings] -> [Share SMB File Setting] is set to “ON”.

(1) Use

- If files in the Public User Box are shared on the network using the Share SMB File function, specify the period from the time when files are saved in the SMB folder through the Public User Box to the time when they are deleted automatically.

(2) Default setting

- 1 day

(3) Setting item

- “1 day”
- 2 days
- 3 days
- 7 days
- 30 days
- Save

7.11 System Settings-Standard Size Setting

- It will be displayed only when the following setting is set to “Level 2.”
  [Service Mode] -> [Enhanced Security] -> [Administrator Feature Level]

7.11.1 Original Glass Original Size Detect

(1) Use

- To change the document size detection table.

(2) Default setting

- Table1

(3) Setting item

- “Table1”
- Table2

7.11.2 $8^1/_2$ × 14/Foolscap Size Detection

(1) Use

- To set whether paper of $8^1/_2$ × $13^1/_2$ size is detected as $8^1/_2$ × 14 or foolscap in original glass or ADF size detection.

(2) Default setting

- $8^1/_2$ × 14

(3) Setting item

- “$8^1/_2$ × 14”
- Foolscap

7.11.3 Foolscap Size Setting

(1) Use

- To set the size for foolscap paper.
- Upon setup.

(2) Procedure

- Select the size from among the following six.

(3) Default setting

- 8 × 13

(4) Setting item

- $8\frac{1}{2} \times 13\frac{1}{2}$
- 220 × 330 mm *
- $8\frac{1}{2} \times 13$
- $8\frac{1}{4} \times 13$
- $8\frac{1}{8} \times 13\frac{1}{4}$ *
- “8 × 13”

NOTE

- ***: Available for manual bypass tray.**

7.11.4 ADF Size Detection

- This setting is available only when “Others3” is selected in [Service Mode] -> [System 1] -> [Marketing Area].

(1) Use

- To set whether or not to give a priority to the detection of 8K/16K size when ADF is used.

(2) Default setting

- K Size (Taiwan)

(3) Setting item

- “K Size (Taiwan)”
- B Series (China)

7.12 System Settings-Stamp Settings

7.12.1 Header/Footer Settings

(1) Use

- Saves or deletes header/footer settings.
- Able to obtain registered header/footer data by [Application] -> [Stamp/Composition].

(2) Procedure

- Touch [New] to register new headers and footers.

7.12.2 Fax TX Settings

(1) Use

- Specifies whether to reset a stamp setting when fax is sent.

(2) Default setting

- Cancel

(3) Setting item

- “Cancel”
- Do Not Cancel

7.13 System Settings-Blank Page Print Settings

7.13.1 Use

- Specifies whether to print a stamp/page number on blank pages.

7.13.2 Default setting

- Do Not Print

7.13.3 Setting item

- Print
- “Do Not Print”

7.14 System Settings-Registered Key Settings

7.14.1 Use

- To select a function to be assigned to a register key on the control panel.
- The functions that can be assigned are as follows:

Copy, Scan/Fax, User Box, Web Browser, APP, 10 Keypad, Utility, Enlarge Display, Guidance, Voice Guidance, Menu, Access

7.14.2 Procedure

1. Select [Register Key 1], [Register Key 2], or [Register Key 3].
2. Select a function to which the key is assigned, and touch [OK].

7.15 System Settings-Job Priority Operation Settings

7.15.1 Fax RX Job Priority

(1) Use

- Configure whether to start processing for the next job when the current job stops due to running out of paper in the paper tray.

(2) Default setting

- No

(3) Setting item

- Yes
- "No"

7.15.2 Skip Job (Fax)

(1) Use

- Select whether to handle the subsequent job as long as it is a printing job for the received fax when printing has stopped because, for example, there is no paper.

(2) Default setting

- Yes

(3) Setting item

- "Yes"
- No

7.15.3 Skip Job (Copy, Print)

(1) Use

- Select whether to handle the subsequent job as long as it is not a printing job for the received fax when printing has stopped because, for example, there is no paper.

(2) Default setting

- Yes

(3) Setting item

- "Yes"
- No

7.16 System Settings-Default Bypass Paper Type Setting

7.16.1 Use

- Configure the initial settings for the paper type to be used for the bypass tray.
- When selecting [Yes], select a paper type.

7.16.2 Procedure

1. Touch [Default Bypass Paper Type Setting].
2. Select the desired paper type and touch [OK].

7.17 System Settings-Page Number Print Position

7.17.1 Use

- Specify a page number print position when printing page numbers after configuring 2-sided print or booklet settings. Select whether to print the page numbers on a same position on all pages or on positions symmetric with respect to the stapling position.

7.17.2 Procedure

1. Touch [Page Number Print Position].
2. Check test pattern and fine adjust the position.

7.18 System Settings-Preview Settings

7.18.1 Original Direction Confirmation Screen

(1) Use

- To set whether to display the screen where the original set direction can be selected after touching [Preview] when printing with the advanced preview function in Scan/Fax mode.

(2) Default setting

- ON

(3) Setting item

- “ON”
- OFF

7.18.2 Realtime Preview

(1) Use

- To set whether or not to display a preview image for each page when scanning an original in Scan/Fax mode.

(2) Default setting

- OFF

(3) Setting item

- ON
- “OFF”

7.18.3 Preview Display Conditions (Standard Application)

(1) Use

- To set the conditions for displaying preview images.

Job Executed	Shows a preview image when pressing Start to execute a job as well as when pressing Preview
Preview Settings Screen	Shows a preview image only when Preview is pressed

(2) Default setting

- Preview Settings Screen

(3) Setting item

- Job Executed
- “Preview Settings Screen”

7.18.4 Preview Display Conditions (Registered Application)

(1) Use

- To set conditions to display preview images when using an OpenAPI application.

(2) Default setting

- Preview Settings Screen

(3) Setting item

- Job Executed
- “Preview Settings Screen”
- Use Standard App. Settings

7.19 System Settings-Enlarge Display Settings

7.19.1 Display Default Setting

(1) Use

- To set whether to use Enlarge Display mode as the initial display of the control panel.

(2) Default setting

- No

(3) Setting item

- Yes
- “No”
- When [Yes] is selected , specify whether or not to enable Enlarge Display mode when Reset is pressed in the Normal Display mode. The default is [Normal Display].

7.19.2 Apply Basic Setting to Enlarge Display

(1) Use

- To set whether to inherit the settings configured on the normal screen display when switching the screen from Normal to Enlarge Display.

Mode 1	Inherit all normal mode settings.
Mode 2	In Copy mode, only inherit Normal mode settings that can be set in Enlarge Display mode. In Scan/Fax mode, reset the settings.

(2) Default setting

- Mode 2

(3) Setting item

- Mode 1
- “Mode 2”

7.20 System Settings-Scan File Name Settings

7.20.1 Function Mode Initial

(1) Use

- To set whether to use an initial of the relevant function as a prefix for the scan file name.
- The following letters are used as a prefix for the file name.

C	Copy
S	Scan/Fax or User Box
P	Print

(2) Default setting

- Attach

(3) Setting item

- “Attach”
- Do not Attach

7.20.2 Supplementary File Name

(1) Use

- To set whether to add a device name or desired text to the file name.

Device Name	Use the name of this machine for the file name. The name of this machine can be changed from, in the Administrator Settings, [Administrator/Machine Settings] - [Input Machine Address] - [Device Name].
Arbitrary Characters	Use any desired text for the file name. Enter a text to be added to the [Arbitrary Characters] (using up to 10 characters).

(2) Default setting

- Device Name

(3) Setting item

- “Device Name”
- Arbitrary Characters

7.21 System Settings-PDF Settings

PDF Settings

- This is displayed only when the optional i-Option LK-102 v3 and upgrade kit UK-204 are enabled.

7.21.1 PDF/A Default Settings

(1) Use

- To set the default value of PDF/A.

(2) Default setting

- Disable

(3) Setting item

- PDF/A-1a
- PDF/A-1b
- “Disable”

7.21.2 PDF Web Optimization Default Settings

(1) Use

- To set whether to optimize display of the PDF in the web browser.

(2) Default setting

- Invalid

(3) Setting item

- Enable
- “Invalid”

7.21.3 Searchable PDF Settings

- This is displayed only when the optional i-Option LK-105 v3 and upgrade kit UK-204 are enabled.

(1) Use

- To set whether to automatically generate a document name by automatically extracting a character string from OCR character recognition during creation of searchable PDF.

(2) Default setting

- Enable

(3) Setting item

- “Enable”
- No Limit
- When selecting [Enable], configure the following settings.

<Doc. Name Max. Length Settings>

- Set the maximum length of the extracted document name.

<Confirm Document Name Settings>

- Set whether to display a screen that allows you to check and edit the document name automatically assigned from OCR results.

7.22 System Settings-Set Paper Name by User

7.22.1 Set Paper Name by User

(1) Use

- Register a paper name and paper type as custom paper. Custom paper can be added to the paper type option.
- When selecting [ON], set a user paper name.

(2) Procedure

1. Touch one of the keys in [Custom 1 to 19].
2. Touch [Paper Name], enter the paper name (using up to 12 characters).
3. Touch [Paper Type], Select a paper type. [Plain Paper] is specified by default.

7.23 System Settings-Custom Display Settings

7.23.1 Main Menu Default Settings

(1) Use

- To set a shortcut key that appears when Menu is pressed and that has a specific function assigned to it.
- The top menu can be extended to 2 screens and up to 23 shortcut keys can be created.

Function	Create a shortcut key to the main screen such as Copy mode or Scan/Fax mode.
Copy Function Settings	Create a shortcut key to the setting screen for copy function.
Scan/Fax Function Settings	Create a shortcut key to the setting screen for scan/fax function.
Copy Program	Create a shortcut key to a copy program. This category can be selected when a copy program is registered on this machine.
Fax/Scan Program	Create a shortcut key to a scan/fax program. This category can be selected when a scan/fax program is registered on this machine.
System User Box	Create a shortcut key to the System User Box.
Sound Setting	Create a shortcut key to the Sound Setting.

(2) Procedure

1. Touch one of the keys in [Main Menu Key 1 to 23].
2. Select [ON] and select a function of which shortcut key is created.

7.23.2 Main Menu Display Settings

(1) Use

- The background of the main menu can be changed according to your preference.

(2) Default setting

- Theme 1

(3) Setting item

- "Theme 1"
- Theme 2
- Theme 3

7.23.3 Custom Function Pattern Selection

(1) Use

- To set the display pattern of functions provided in each mode.

Copy/Print	To change a display pattern of function keys to be displayed in the print settings screen in copy or User Box mode.
Send/Save	To change a display pattern of function keys to be displayed in the send or save settings screen in scan/fax or User Box mode.

- The display pattern can be changed to any of the above three types depending on function key usage conditions. Touch [Details] to check the functions to be displayed.
- [Standard Functions] is not displayed in the USA model.

Full Functions	Displays all function keys
Standard Functions	Displays the standard function keys
Basic Functions	Displays the more basic function keys than [Standard Functions]

NOTICE

- When a custom function pattern is registered or imported in [Service Mode] -> [System 2] -> [Custom Pattern], the pattern ([Custom 1] to [Custom 3]) also can be selected.

(2) Default setting

- Full Functions

(3) Setting item

- "Full Functions"
- Standard Functions
- Basic Functions

7.23.4 User/Admin Function Permissions

(1) Use

- To set whether to allow changes of the function key display pattern by user/account.

(2) Default setting

- Restrict

(3) Setting item

- Allow
- "Restrict"

7.23.5 Function Display Key Permission Setting-Copy/Print

(1) Use

- To set whether or not to allow a change of function keys to be displayed on the main screen in the copy mode and the print settings screen in the User Box mode.
- When selecting [Allow], [Function Display Key (Copy/Print)] is displayed in [User Settings] -> [Custom Display Settings] and you can configure the setting.

(2) Default setting

- Restrict

(3) Setting item

- Allow
- "Restrict"

7.23.6 Function Display Key Permission Setting-Send/Save

(1) Use

- To set whether or not to allow a change of function keys to be displayed on the main screen in the scan/fax mode and the send or save settings screen in the User Box mode.
- When selecting [Allow], [Function Display Key (Send/Save)] is displayed in [User Settings] -> [Custom Display Settings] and you can configure the setting.

(2) Default setting

- Restrict

(3) Setting item

- Allow
- "Restrict"

7.23.7 Temporary Change Language Setting

(1) Use

- To select whether or not to display the [Language] key, which is used to temporarily change the language for the control panel, on the top screen in each mode.
- The temporarily enabled language is returned to the language configured in [User Settings] after any of the following operations.
  - Main power switch
  - Power key
  - Sleep mode
  - Low power mode
  - System Auto Reset
  - Logout

(2) Default setting

- OFF

(3) Setting item

- ON
- "OFF"

7.23.8 Display 10 Keypad when entering Number of Sets

(1) Use

- To set whether to always display the Keypad on the screen, on which you can enter the number of copies, when you have tapped the number of copies.

(2) Default setting

- When Number of Sets is pressed

(3) Setting item

- Always
- "When Number of Sets is pressed"

7.24 Administrator/Machine Settings

7.24.1 Administrator Registration

(1) Use

- Registers administrator information displayed Help service/Administrator information screen as well as sender addresses used for E-mail transmission from the machine.

(2) Procedure

1. Touch [Administrator Name], [E-Mail Address] to input them.
2. Using the 10-key pad, enter the extension No.

7.24.2 Input Machine Address

(1) Use

- To register the name of the machine and e-mail address.

Device Name	When the file name of the transmitted file or the document name of document registered in Box is generated automatically, it is added.
E-Mail Address	To be used as from address at internal Fax transmission.

(2) Procedure

1. Touch [Device Name] and input the name.
2. Touch [E-Mail Address] and input the E-mail address.

7.25 One-Touch/User Box Registration-Create One-Touch Destination

7.25.1 Address Book (Public)/(Personal)

(1) E-Mail

(a) Use

- To register/change the e-mail address for transmitting the scanned data by e-mail.

(b) Procedure

- Touch [New] to register the new address.
- Select any displayed address to check, edit, or delete the setting.

(2) User Box

- It will not be displayed when the following setting shows that authentication device 2 or the vendor 2 is mounted.
  [Service Mode] -> [Billing Setting] -> [Management Function Choice]

(a) Use

- To register or change the box address for storing the scanned data to the box in the hard disk of the machine.

(b) Procedure

- Touch [New] to register the new address.
- Select any displayed address to check, edit, or delete the setting.
- At least one user box must be registered in order to register the box address.

(3) Fax

- It will be displayed only when the following setting shows that fax is set to “Set”.
  [Service Mode] -> [System 2] -> [Option Board Status]

(a) Use

- To register or change the fax number for transmitting the fax.

(b) Procedure

- Touch [New] to register the new address.
- Select any displayed address to check, edit, or delete the setting.

(4) PC (SMB)

(a) Use

- To register or change the SMB address for transmitting the scanned data by SMB.

(b) Procedure

- Touch [New] to register the new address.
- Select any displayed address to check, edit, or delete the setting.

(5) FTP

(a) Use

- To register and change the FTP address for transmitting the scanned data by FTP.

(b) Procedure

- Touch [New] to register the new address.
- Select any displayed address to check, edit, or delete the setting.

(6) WebDAV

(a) Use

- To register and change the WebDAV address for transmitting the scanned data by WebDAV.

(b) Procedure

- Touch [New] to register the new address.
- Select any displayed address to check, edit, or delete the setting.

(7) IP Address Fax

- It will be displayed only when the following setting is set to “ON”.
  [Administrator Settings] -> [Network Settings] -> [Network Fax Settings] -> [Network Fax Function Settings] -> [IP Address Fax Function]

(a) Use

- To register/change the IP address fax destination when transmitting the IP address fax data.

(b) Procedure

- A new address can be registered by touching [New].
- Select any displayed address to check, change or delete the setting.

(8) Internet Fax

- It will be displayed only when the following setting is set to “ON”.
  [Administrator Settings] -> [Network Settings] -> [Network Fax Settings] -> [Network Fax Function Settings] -> [Internet Fax Function]

(a) Use

- To register/change the Internet fax address when transmitting the internet fax data.

(b) Procedure

- A new address can be registered by touching [New].
- Select any displayed address to check, change or delete the setting.

7.25.2 Group

(1) Use

- To register or change the group with a number of addresses to transmit data simultaneously.

(2) Procedure

- Touch [New] to register the new group.
- Select any displayed group to check, edit, or delete the setting.
- At least one address must be registered in order to register the group.

7.25.3 E-Mail Settings

(1) E-Mail Subject

(a) Use

- To register the e-mail subject for transmitting the scanned data by e-mail.

(b) Procedure

- Touch [New] to register the new subject.
- Select any displayed subject to detail check, edit, or delete the setting.
- The subject can be set as default by selecting the subject displayed on the screen and pressing [Set as Default].

(2) E-mail Body

(a) Use

- To register the e-mail message for transmitting the scanned data by e-mail.

(b) Procedure

- Touch [New] to register the new message.
- Select any displayed message to detail check or delete the setting.
- The text can be set as default by selecting the text displayed on the screen and pressing [Set as Default].

7.26 One-Touch/User Box Registration-Create User Box

7.26.1 Public/Personal User Box

(1) Use

- To register or change the box for storing the text data in the hard disk of the machine.

(2) Procedure

- Touch [New] to register the new box.
- Select any displayed box to edit or delete it.

7.26.2 Bulletin Board User Box

- It will be displayed when the optional fax kit FK-511 is installed.

(1) Use

- To register or change the bulletin board user box.

(2) Procedure

- Touch [New] to register the new box.
- Select any displayed box to edit or delete it.

7.26.3 Relay User Box

- It will be displayed when the optional fax kit FK-511 is installed.

(1) Use

- To register/change the Relay User Box.

(2) Procedure

- A new box can be registered by touching [New].
- Select any displayed box to change or delete it.

7.26.4 Annotation User Box

(1) Use

- To register or change the annotation user box.
- To attach the image of the date, time, and/or filing number to the document data stored in the scanner mode, and to distribute them.

(2) Procedure

- Touch [New] key to register the new box.
- Select any displayed box to change or delete it.

7.27 One-Touch/User Box Registration-One-Touch/User Box Registration List

7.27.1 Address Book List

(1) Use

- To output the address book list.

(2) Procedure

1. Select the destination type to be output in [Print Destination List by Type].
2. Touch [Starting Destination No.] and enter the number from which output starts.
3. Touch [Number of Destinations] and specify the number of destinations to be output.
4. Touch [Print], and select the paper feed tray.
5. Select the simplex or duplex print, and press the Start key to output the list of abbreviated addresses.

7.27.2 Group List

(1) Use

- To output the group list.

(2) Procedure

1. Touch [Starting Destination No.] and enter the number from which output starts.
2. Touch [Number of Destinations] and specify the number of destinations to be output.
3. Touch [Print], and select the paper feed tray.
4. Select the simplex or duplex print, and press the Start key to output the list of abbreviated addresses.

7.27.3 Program List

(1) Use

- To output the program list.

(2) Procedure

1. Select the destination type to be output in [Print Destination List by Type].
2. Touch [Starting Destination No.] and enter the number from which output starts.
3. Touch [Number of Destinations] and specify the number of destinations to be output.
4. Touch [Print], and select the paper feed tray.
5. Select the simplex or duplex print, and press the Start key to output the list of abbreviated addresses.

7.27.4 E-Mail Subject/Text List

(1) Use

- To output the subject or the text list.

(2) Procedure

1. Select the paper feed tray.
2. Select [1-Sided] or [2-Sided] and touch [Start] to output Subject/Text List.

7.28 One-Touch/User Box Registration-Maximum Number of User Boxes

7.28.1 Use

- To set the maximum number of user boxes that can be created for each user or not.
- A user box type ([Public]/[Personal Use Box]/[Group]) can be selected according to the user authentication and account settings.

7.28.2 Procedure

1. To set an upper limit of user boxes, select a user box type, and select the user name or account name.
2. Select [ON].
3. To enter the maximum number of user boxes to create.
4. Select [Apply].

NOTE

- **If the maximum number of user boxes is set to "0", you cannot create new ones.**
- **If the selected user has already created three user boxes, for example, you can set the maximum number of user boxes within the range of 3 to 1000.**

7.29 User Authentication/Account Track-General Settings

- It will not be displayed when the following setting shows that key counter or vendor 2 is mounted.

[Service Mode] -> [Billing Setting] -> [Management Function Choice]

NOTE

- **Before registering a user, select an authentication method. If all management data is cleared after the authentication method was selected, the histories of the registered users, print, send, receive, and save jobs are deleted.**

7.29.1 User Authentication

(1) Authentication Method

(a) Use

- To set the user authentication method.

ON (MFP)	The authentication function of this machine is used for user authentication. This authentication method only allows users registered on this machine to use it.
External Server Authentication	Interacts with the authentication server used for user authentication in the operating environment. This authentication method only allows users registered on the authentication server to use this machine. Register the authentication server beforehand from [Administrator Settings] - [User Authentication/Account Track] - [External Server Settings].
Main + External Server	Select this option to enable login using the authentication function of the MFP in case a trouble occurs on the external authentication server.
Enhanced Server Authentication	Interacts with the enhanced server such as Authentication Manager. This authentication method only allows users registered on the enhanced server to use this machine.
Main + Enhanced Server	Select this option to enable login using the authentication function of the MFP in case a trouble occurs on the enhanced server such as Authentication Manager.

(b) Default setting

- OFF

(c) Setting item

- Authenticate
- “OFF”

(2) Default Authentication Method

(a) Use

- To set your preferred authentication method if [Main + External Server] or [Main + Enhanced Server] is selected with [Authentication Method].

(b) Default setting

- External Server Authentication ([Main + External Server])
- Enhanced Server Authentication ([Main + Enhanced Server])

(c) Setting item

- “External Server Authentication” ([Main + External Server])
- “Enhanced Server Authentication” ([Main + Enhanced Server])
- ON (MFP)

NOTE

- **If [Administrator Settings] -> [Security Settings] -> [Enhanced Security Mode] is set to “ON”, selecting “OFF” in this setting cancels enhanced security mode.**
- **[External Server Authentication] cannot be selected when external servers are not registered in the following setting.**
  [Administrator Settings] -> [User Authentication/Account Track] -> [External Server Settings]
- **Neither [External Server Authentication] or [ON (MFP)] can be selected when the presence of management device is set in the following setting.**
  [Service Mode] -> [Billing Setting] -> [Management Function Choice]

(3) Overwrite User Info

(a) Use

- To set whether to allow the user to overwrite registered user information
- When the external server authentication is used, authenticated user information is also managed on this machine. If the number of users who have executed the external server authentication reaches the maximum number of users this machine can manage, authentication of any new users will not be permitted. If you select [Allow], the oldest authenticated user information is erased and the new user is registered.
- If [Enhanced Server Authentication] or [Main + Enhanced Server] is selected with [Authentication Method], [Allow] is specified forcibly.

(b) Default setting

- Restrict

(c) Setting item

- Allow
- “Restrict”

(4) Temporarily Save Authentication Info.

- This is displayed only when [Main + External Server] is selected as user authentication method.

(a) Use

- To select whether or not to cache the information used in the external server authentication into the MFP and to use it when the server is down.

(b) Default setting

- OFF

(c) Setting item

- Enable
- "OFF"

(5) Temporarily Save Authentication Info.-Reconnection Settings

(a) Use

- To change the time to reconnect to the authentication server.
- When selecting [Set Reconnect Interval], set the reconnection time.

Reconnect for every login	If the authentication server is in the shutdown state, first confirm that the authentication server is down, and use the temporarily saved authentication information to log in to this machine.
Set Reconnect Interval	Connect to the authentication server at the time specified in [Reconnection Time], and check the status of the authentication server. If the authentication server is in the shutdown state, use the authentication information temporarily saved in the main unit to log in.

(b) Default setting

- Set Reconnect Interval

(c) Setting item

- Reconnect for every login
- "Set Reconnect Interval"

(6) Temporarily Save Authentication Info. - Expiration Date Settings

(a) Use

- Select whether to set the validity period to the temporarily saved authentication information.
- When selecting [Enable], set the expiration date.

(b) Default setting

- Invalid

(c) Setting item

- Enable
- "Invalid"

7.29.2 Public User Access

(1) Use

- To set whether to allow or prohibit the nonregistered user to use the system when User authentication has been set.
- Able to use the machine without authentication by logging in as a public user when [ON (Without Login)] is selected.

(2) Default setting

- Restrict

(3) Setting item

- "Restrict"
- ON (With Login)
- ON (Without Login)

NOTE

- **This setting is not available without user authentication.**
- **If [Administrator Settings] -> [Security Settings] -> [Enhanced Security Mode] is set to "ON", selecting "ON" in this setting cancels enhanced security mode.**

7.29.3 Prohibited Function Login Setting

(1) Use

- To set whether to appear the login screen when a public user attempts to use a restricted function.

(2) Default setting

- Do Not Request

(3) Setting item

- Request
- “Do Not Request”

7.29.4 Account Track

(1) Use

- To set whether to enable the account track function or not.

(2) Default setting

- OFF

(3) Setting item

- “OFF”
- ON

7.29.5 Account Track Input Method

(1) Use

- To set the authentication method for the account track.
- To select whether to authenticate by password or by account name & password.

(2) Default setting

- Account Name & Password

(3) Setting item

- “Account Name & Password”
- Password Only

NOTE

- **This setting is not available without the account track.**
- **“Password Only” cannot be set when using both user authentication and account track.**

7.29.6 Synchronize User Authentication & Account Track

(1) Use

- To set whether to synchronize the user authentication and account track.

(2) Default setting

- Synchronize

(3) Setting item

- “Synchronize”
- Do Not Synchronize
- Synchronize by User

NOTE

- **The setting is available only when carrying out the user authentication and account track.**

7.29.7 When # of Jobs Reach Maximum

(1) Use

- To set whether to stop the currently printing job and start the next job, or to stop the machine, when reaching to the upper limit for the number of printed pages set by the user authentication and the account track.
- To stop the machine when the number of printed pages reach the upper limit set by the user authentication and the account track.

(2) Default setting

- Skip Job

(3) Setting item

- “Skip Job”
- Stop Job

7.29.8 Number of User Counters Assigned

- It will not be displayed when the following setting shows that management device 2 is mounted.
  [Service Mode] -> [Billing Setting] -> [Management Function Choice]

(1) Use

- To set the number available to be assigned for the user registration and account registration.

(2) Procedure

- The total number to be registered for the user authentication and account track is 1000.
  The number for the user registration will be set.
  When setting the [Number of User Counters Assigned] to 50, the number available for Account Track will be 950.

NOTE

- **The setting is available only when carrying out the user authentication and account track.**

(3) Default setting

- 500

(4) Setting range

- 1 to 999

7.29.9 Ticket Hold Time Setting

(1) Use

- Specify the desired length of holding time of Kerberos authentication ticket.

NOTE

- **This setting takes effect only when the authentication server type is set to active directory.**

(2) Default setting

- 600 min.

(3) Setting range

- 1 to “600 min.”

7.29.10 LDAP-IC Card Authentication Setting

- Configure settings for authentication by the LDAP server using the card ID registered on authentication cards in an environment with IC card-based user authentication implemented by connecting the Authentication Unit (IC card type).
- When [Administrator Settings] -> [User Authentication/Account Track] -> [General Settings] -> [User Authentication] is set to [External Server Authentication] or [Main + External Server], this function is available.

(1) LDAP-IC Card Authentication Setting

(a) Use

- To set whether to enable authentication by the LDAP server using the card ID registered on authentication cards.

(b) Default setting

- OFF

(c) Setting item

- ON
- “OFF”

(2) Setting Up LDAP

- Register the LDAP server to be used for authenticating the user ID of the IC card.
- Touch the [Check Connection] to try connecting to the LDAP server using the entered information and check if the information registered is correct.
- Touch the [Reset All Settings] to reset all the information entered.

(3) Setting Up LDAP-User Name Acquisition

(a) Use

- To set the method for obtaining the user name for logging in to this machine.

(b) Default setting

- Use Card IC

(c) Setting item

- “Use Card IC”
- Acquiring
- When [Acquiring] is selected, enter the attribute to be searched as the user name (such as “uid”) in [User Name Attribute].

(4) Setting Up LDAP-Timeout

(a) Use

- To set the timeout period for LDAP search.

(b) Procedure

1. Touch [Input].

2. Touch Clear, and enter the timeout period using the 10-key pad.

(5) Setting Up LDAP-Search Attribute(s)

(a) Use

- To enter the search attribute to be used for search of a user using the LDAP server (using up to 63 characters).

(b) Default setting

- uid

(6) Setting Up LDAP-Server Address

(a) Use

- To set the LDAP server address.

(b) Procedure

1. Touch [Server Address].
2. Select [Input Host Name], [IPv4 Address Input] or [IPv6 Address Input], and enter the server address.

(7) Setting Up LDAP-Search Base

(a) Use

- To set the directory path for LDAP server.

(b) Procedure

1. Touch [Search Base].
2. Enter the search base (up to 255 characters) on the on-screen keyboard, and touch [OK].

(8) Setting Up LDAP-SSL Setting

(a) Use

- To set whether to use SSL (data encryption) for connecting to LDAP server.

(b) Default setting

- OFF

(c) Setting item

- ON
- “OFF”

(9) Setting Up LDAP-Port Number

(a) Use

- To set the LDAP server port number.

(b) Procedure

1. Touch [Input].
2. Touch Clear.
3. Enter the port number between 1 and 65535 using the 10-Key pad.

(10) Setting Up LDAP-Port Number (SSL)

(a) Use

- To set the port number for LDAP server when using SSL.

(b) Procedure

1. Touch [Input].
2. Touch Clear.
3. Enter the port number between 1 and 65535 using the 10-Key pad.

(11) Setting Up LDAP-Certificate Verification Level Settings

(a) Use

- To verify the server certificate, configure settings to verify the certificate.

(b) Procedure

Expiration Date	Select whether to check that the server certificate is within the validity period.
Key Usage	Select whether to check that the server certificate is used according to the purpose approved by the issuer.
Chain	• Select whether to check that the server certificate chain (certification path) is correct. • The chain is validated by referencing the external certificates managed on this machine.
Expiration Date Confirmation	• Select whether to check that the server certificate is within the validity period.

	• The OCSP service and CRL (Certificate Revocation List) are checked in this order when the expiration date of the certificate is checked.
CN	Select whether to check that the CN of the server certificate matches the server address.

(12) Setting Up LDAP-Authentication Type

(a) Use

- To set the authentication method to logon to LDAP server.

Simple	Simple method which needs the user name and the password.
Digest-MD5	Method available with normal LDAP server. When failing to authenticate with Digest-MD5, it automatically switches to CRAM-MD5.
GSS-SPNEGO	Method available with Windows active directory (Kerberos authentication).
NTLM v1	Standard user authentication format used for Windows NT, etc.
NTLM v2	Standard user authentication format used for Windows NT, etc. It has been applied to the Windows NT4.0 SP4 and later versions. Its security has been enhanced compared to v1.

(b) Default setting

- Simple

(c) Setting item

- “Simple”
- Digest-MD5
- GSS-SPNEGO
- NTLM v1
- NTLM v2

(13) Setting Up LDAP-Referral Setting

(a) Use

- To set whether or not to use the referral setting.
- To use when tracing the server with referral at the time of LDAP connection.

(b) Default setting

- ON

(c) Setting item

- “ON”
- OFF

(14) Setting Up LDAP-Login Name

(a) Use

- To set the login name to connect to LDAP server.

(b) Procedure

1. Touch [Login Name].
2. Enter the login name (up to 64 characters) on the on-screen keyboard, and touch [OK].

(15) Setting Up LDAP-Password

(a) Use

- To set the password for connecting to LDAP server.

(b) Procedure

1. Touch [Password].
2. Enter the password (up to 64 characters) on the on-screen keyboard, and touch [OK].

(16) Setting Up LDAP-Domain Name

(a) Use

- To set the domain name for connecting to LDAP server.

(b) Procedure

1. Touch [Domain Name].
2. Enter the domain name (up to 64 characters) on the on-screen keyboard, and touch [OK].

(17) LDAP Server Connection Settings

- Select the name of the external server to be used as authentication information saved in this machine.

- The authentication information is saved in this machine when the LDAP-IC card authentication is successfully completed. This authentication information includes the user name and the external server name. As for the external server name in authentication information to be saved in this machine, you can register the name of external server registered on this machine.

7.30 User Authentication/Account Track-User Authentication Settings

- This setting is not available without user authentication.

7.30.1 Administrative Settings

(1) User Name List

(a) Use

- To set whether to display or not the list key for user names on user authentication screen.

(b) Default setting

- OFF

(c) Setting item

- ON
- “OFF”

NOTE

- **If [Administrator Settings] -> [Security Settings] -> [Enhanced Security Mode] is set to “ON”, selecting “ON” in this setting cancels enhanced security mode.**

(2) Default Function Permission

(a) Use

- To set the default value for the function permission in user authentication by the external server.
- To set the function which authenticated user can use when initially authenticating the user by the external server.
- Items available for setting:
  Copy, Scan, Fax, Print, User Box, Print Scan/Fax TX, Save to External Memory, External Memory Document Scan, Manual Destination Input, and Cellular Phone/PDA, Web Browser

(b) Default setting

- Allow

(c) Setting item

- “Allow”
- Restrict

(3) ID & Print Settings

(a) Use

- Selects whether to handle the print job normally output with the printer driver as the ID & Print job.

(b) Default setting

- ID & Print: OFF
- Public User: Print Immediately

(c) Setting item

ID & Print
- ON
- “OFF”

Public User
- “Print Immediately”
- Save

(4) ID & Print Operation Settings

- It will be displayed only when the following setting shows that authentication device 2 is mounted.
  [Service Mode] -> [Billing Setting] -> [Management Function Choice]

(a) Use

- To set whether to print all the jobs or each job by the single authentication when using ID & Print.

(b) Default setting

- Print All Jobs

(c) Setting item

- “Print All Jobs”
- Print Each Job

(5) Default Operation Selection

(a) Use

- To set the default for the operation after user authentication login.
  The Print & Access Basic Screen prints the ID & Print job. The Access Basic Screen logs in without printing.

(b) Default setting

- Print & Access Basic Screen

(c) Setting item

- "Print & Access Basic Screen"
- Access

7.30.2 User Registration

(1) Use

- To conduct Register/Edit of the user information. Also to set the function limitation and the upper limit of number of printing copies for each user.

(2) Procedure

1. Select the user, and touch [Edit].
2. Input the [User Name], [Password], and [E-Mail Address].
   NOTE
   - **It cannot be entered when conducting authentication by external server.**
3. Set the [Max. Allowance Set], [Function Permission], [Pause], [Register Auth. Info.], [Custom Pattern Function], [Synchronize Account Track] and touch [OK].

NOTE

- **When the public users are allowed, the output permission and the function permission can be set.**
- **[Register Auth. Info.] does not appear when the presence of Authentication Device 2 is unset in the following setting.**
  [Service Mode] -> [Billing Setting] -> [Management Function Choice]
- **[Custom Pattern Function] does not appear when the following setting is unset to "Allow."**
  [Administrator Settings] -> [System Settings] -> [Custom Display Settings] -> [User/Admin Function Permissions]
- **[Synchronize Account Track] does not appear when the following setting is unset to "Synchronize by User."**
  [Administrator Settings] -> [User Authentication/Account Track] -> [General Settings] -> [Synchronize User Authentication & Account Track]

7.30.3 User Counter

(1) Use

- To display the status of use of the copy+print, copy, print and scan/fax for each user.

(2) Procedure

1. Select the user and touch [Counter Details].
2. Select the key to check to see the status of use.
3. For clearing the counter, touch [Clear Counter].
4. For clearing the all counters, touch [Reset All Counters].

7.31 User Authentication/Account Track-Account Track Settings

- The settings are available only when carrying out the account track.

7.31.1 Account Track Registration

(1) Use

- To conduct Register/Edit of the department information. Also to set the function limitation and the upper limit of number of printing copies for each department.

(2) Procedure

1. Select the proper Account and touch [Edit].
2. Input the [Account Name], [Password] and [Name].
3. Set the [Max. Allowance Set], [Function Permission], [Pause], [Custom Pattern Function] and touch [OK].

NOTE

- **When the "Password Only" is selected for [Account Track Input Method], [Account Name] does not appear.**
- **When the "Account Name & Password" is selected for [Account Track Input Method], [Name] does not appear.**
- **[Custom Pattern Function] does not appear when the following setting is unset to "Allow."**
  [Administrator Settings] -> [System Settings] -> [Custom Display Settings] -> [User/Admin Function Permissions]

7.31.2 Account Track Counter

(1) Use

- To display the status of use of the copy+print, copy, print and scan/fax for each account.

(2) Procedure

1. Select the account and touch [Counter Details].

2. Select the key for the item to be checked.
3. For clearing the counter, touch [Clear Counter].
4. For clearing the all counters, touch [Reset All Counters].

7.32 User Authentication/Account Track-Print without Authentication

- If [Administrator Settings] -> [Security Settings] -> [Enhanced Security Mode] is set to “ON”, selecting “Allow” in this setting cancels enhanced security mode.

7.32.1 Use

- To set whether to allow or restrict the print job which user and account are not specified.
- To allow or restrict printing which user and account are not specified.
- When Allow is selected, pages printed by unidentified users are counted and included in the count of the public user.

7.32.2 Default setting

- Restrict

7.32.3 Setting item

- Allow
- “Restrict”

7.33 User Authentication/Account Track-Print Counter List

- The setting is available only when carrying out the user authentication or account track.
- It will not be displayed when the following setting shows that key counter, vendor 2, or management device 2 is mounted.
  [Service Mode] -> [Billing Setting] -> [Management Function Choice]

7.33.1 Use

- To print out the User counter and the account counter.

7.33.2 Procedure

1. Touch [Print Counter List].
2. Select a paper tray.
3. Select the simplex or duplex print.
4. Select All Data or Print Data Only as print item, and touch [Start] to output a list.

7.34 User Authentication/Account Track-External Server Settings

7.34.1 External Server Settings

(1) New

(a) Use

- Registers and sets an external server that is used for user authentication.

(b) Procedure

1. Select one from No. 1 to No. 20 and touch [NEW].
2. Set [Server Name] and [Server Type].
3. To change settings, select an external server to be edited and touch [Edit].

(c) Setting item

Server Type:

- Active Directory
- NTLM v1
- NTLM v2
- NDS over IPX
- NDS over TCP/IP
- LDAP

NOTE

- **Neither [NTLM v1] nor [NTLM v2] appear when “OFF” is selected in the following setting.**
  [Administrator Settings] -> [Network Settings] -> [SMB Settings] -> [Client Settings] -> [User Authentication (NTLM)]
- **[NDS over IPX] and [NDS over TCP/IP] do not appear when “OFF” is selected in the following setting.**
  [Administrator Settings] -> [Network Settings] -> [NetWare Settings] -> [User Authentication Setting (NDS)]
- **[NDS over IPX] does not appear when "OFF" is selected in the following setting.**
  [Administrator Settings] -> [Network Settings] -> [NetWare Settings] -> [IPX Settings]

7.35 User Authentication/Account Track-Limiting Access to Destinations

7.35.1 Create Group

(1) Use

- Registers and edits groups of destinations for limiting access.

(2) Procedure

1. Select a group and touch [Edit].

2. Enter [Group Name].
3. Set the Access Allowed Level and touch [OK].

7.35.2 Apply Levels/Groups to Destinations

(1) Use

- Sets Apply Level and Apply Group for individual destinations.

(2) Procedure

1. Select one from Address Book, Group, and Program.
2. Select a registered address. Touch [Apply Group] and [Apply Level] independently to make each settings.

7.35.3 Apply Levels/Groups to Users

(1) Use

- Sets Apply Level or Apply Group for individual users.

(2) Procedure

1. Select a registered user. Touch [Apply Group] and [Apply Level] independently to make each settings.

7.36 User Authentication/Account Track-Authentication Device Settings

- The function can be displayed when the authentication device 2 is set to Set by [Service Mode] -> [Billing Setting] -> [Management Function Choice].
- It will be displayed when the following setting is set to “ON.”
  [Administrator Settings] -> [Network Settings] -> [IWS Settings]

7.36.1 General Settings

(1) Use

- Specifies a device used for user authentication.

<table>
<tr><td rowspan="5">Card Authentication</td><td rowspan="3">Card settings</td><td rowspan="2">IC Card type setting</td><td colspan="2">Select the type of the required IC card.
• To use the Felica card, select [Felica], [SSFC], [FCF], or [FCF (Campus)]. When [SSFC] is selected, detailed information such as the company code or company identification code is registered.
• To use the Type A card, select [Type A].
• To use the Felica and Type A cards together, select [Felica+TypeA], [SSFC+TypeA], [FCF+Type A], or [FCF(Campus)+Type A]. When [SSFC+TypeA] is selected, detailed information such as the company code or company identification code is registered.</td></tr>
<tr><td>IC Card Detail Settings</td><td>The registered settings of the loadable driver used for the IC card can be changed on the Web browser of this main body This will be hidden when any of the following conditions is satisfied.
• The loadable driver used for models other than AU-201 has been installed.</td></tr>
<tr><td>IC Card Type</td><td colspan="2">The type of the IC card which has been set will be displayed.
• This is displayed only when the loadable driver used for the YSoft card reader has been installed.</td></tr>
<tr><td colspan="2">Operation Settings</td><td colspan="2">Set how to log in to this machine.
• [Card Authentication]: Pass the IC card over the authentication unit to log in.
• [Card Authentication + Password]: Pass the IC card over the authentication unit, and enter the password to log in.
[Card Authentication] is specified by default.</td></tr>
<tr><td colspan="2">Authentication Card ID Number</td><td colspan="2">• Specify whether to notify the counter, which collects the use status of this machine, of the authentication card ID.
• [Ignore] is specified by default.</td></tr>
<tr><td rowspan="2">Bio Authentication</td><td colspan="2">Beep Sound</td><td colspan="2">• Set whether to give a "blip" sound when the finger vein pattern is scanned successfully.
• [ON] is specified by default.</td></tr>
<tr><td colspan="2">Operation Settings</td><td colspan="2">Set how to log in to this machine.
• [1-to-many authentication]: A user simply needs to place his or her finger to log in.
• [1-to-1 authentication]: A user needs to enter the user name and place his or her finger to log in.
[1-to-many authentication] is specified by default.</td></tr>
</table>

(2) Procedure

- Select either one of the authentication devices and press the corresponding key to go to the individual operation setting screen.
- The screen displays the authentication device that is selected in [Service Mode] -> [Billing Setting] -> [Management Function Choice] -> [Authentication Device 2].
- If SSFC (Shared Security Formats Cooperation) is selected in Card Authentication, set [Company Code], [Company Identification Code], [Area No.], [Building No.], [Floor No.], [Room No.], and [Security Level].

(3) Setting items for SSFC card information

When using SSFC card, acquire the following information from the administrator and convert the value to input using the control panel.

Information to be obtained from the administrator		
Items of Felica SSFC detail setting	Sample-data (decimal number)	Setting value (hexadecimal number)
Room number	37	00 25
Floor number	15	00 0F
Building number	50	00 32
Area number	85	00 55
Security level	2	00 02
Company identification code (CL code) *1	06BGLQVX17 (ASCII code)	30 36 42 47 4C 51 56 58 31 37
Company code *2	CompanyA (ASCII code)	CompanyA

*1: The character length of the company code is 10 bytes.
*2: Use alphabetical upper case/lower case characters and numeric characters for Company code. When the company code is not set, this space will be left blank.

7.36.2 Logoff Settings

(1) Use

- Select whether or not the user is logged off after a scan or fax is sent or after the copy document is scanned.

(2) Default setting

- Do not log off

(3) Setting item

- “Do not log off”
- Log off

7.37 User Authentication/Account Track-User/Account Common Setting

7.37.1 Logout Confirmation Screen Display Setting

(1) Use

- Select whether or not to display the logout confirmation screen.
- If the setting is made not to display the confirmation screen, the logout sequence is performed only through the access key operation with no confirmation screen appearing.

(2) Default setting

- ON

(3) Setting item

- “ON”
- OFF

7.37.2 Counter Remote Control

(1) Use

- To select whether or not to allow the Center to acquire counter information managed by the MFP when CS Remote Care is used.
- This setting is available if you use the CS Remote Care, and user authentication and account track is installed on this machine.

(2) Default setting

- Restrict

(3) Setting item

- Allow
- “Restrict”

7.38 User Authentication/Account Track-Scan to Home Settings

7.38.1 Use

- To set whether or not to enable the Scan to Home function that is used to send scanned data to user’s home folder.

7.38.2 Default setting

- Disable

7.38.3 Setting item

- Enable
- “Disable”

7.39 User Authentication/Account Track-Scan to Authorized Folder Settings

7.39.1 Use

- Use to restrict specification of sending destinations by users.
- Enabling this item disables manual entry of destinations except for recipients of faxes or IP address faxes. Therefore users can specify sending destinations only by accessing the address book. Enabling this item also applies the following restrictions.
  - Users cannot save documents to User Boxes
  - Users cannot transmit documents from User Boxes
  - Users cannot use annotation User Boxes
  - Users cannot use the image panel
  - Users cannot select addresses from the transmission history
  - Users cannot use the URL notification function

7.39.2 Default setting

- Do Not Limit

7.39.3 Setting item

- Limit
- “Do Not Limit”

7.40 User Authentication/Account Track-Print Simple Auth.

7.40.1 Authentication Setting

(1) Use

- To select whether or not to allow simple authentication for print jobs.
- When MFP authentication is selected, you can print from the printer driver using authentication that requires only your user name (without password).

(2) Default setting

- Restrict

(3) Setting item

- Allow
- “Restrict”

7.40.2 Register Authentication Server

- To register the LDAP server to check user names when external server authentication is implemented.
- When [Administrator Settings] -> [User Authentication/Account Track] -> [General Settings] -> [User Authentication] is set to [External Server Authentication], this function is available.
- Touch the [Check Connection] to try connecting to the LDAP server using the entered information and check if the information registered is correct.
- Touch the [Reset All Settings] to reset all the information entered.

(1) Register Authentication Server-External Server Authentication

(a) Use

- Select the external server name to be used as a part of user information when authentication using the LDAP server is successfully completed from the external servers registered on this machine.

(b) Procedure

1. Touch [Select Servers].
2. Select the external server to be used.

(2) Register Authentication Server-Timeout

(a) Use

- To set the timeout period for LDAP search.

(b) Procedure

1. Touch Clear, and enter the timeout period using the 10-key pad.

(3) Register Authentication Server-Search Attributes

(a) Use

- To enter the search attribute to be used for search of a user using the LDAP server (using up to 63 characters).

(b) Default setting

- uid

(4) Register Authentication Server-Server Address

(a) Use

- To set the LDAP server address.

(b) Procedure

1. Touch [Server Address].
2. Select [Input Host Name], [IPv4 Address Input] or [IPv6 Address Input], and enter the server address.

(5) Register Authentication Server-Search Base

(a) Use

- To set the directory path for LDAP server.

(b) Procedure

1. Touch [Search Base].
2. Enter the search base (up to 255 characters) on the on-screen keyboard, and touch [OK].

(6) Register Authentication Server-SSL Setting

(a) Use

- To set whether to use SSL (data encryption) for connecting to LDAP server.

(b) Default setting

- OFF

(c) Setting item

- ON
- “OFF”

(7) Register Authentication Server-Port Number

(a) Use

- To set the LDAP server port number.

(b) Procedure

1. Touch [Input].
2. Touch Clear.
3. Enter the port number between 1 and 65535 using the 10-Key pad.

(8) Register Authentication Server-Port Number (SSL)

(a) Use

- To set the port number for LDAP server when using SSL.

(b) Procedure

1. Touch [Input].
2. Touch Clear.
3. Enter the port number between 1 and 65535 using the 10-Key pad.

(9) Register Authentication Server-Certificate Verification Level Settings

(a) Use

- To verify the server certificate, configure settings to verify the certificate.

(b) Procedure

Expiration Date	Select whether to check that the server certificate is within the validity period.
Key Usage	Select whether to check that the server certificate is used according to the purpose approved by the issuer.
Chain	• Select whether to check that the server certificate chain (certification path) is correct. • The chain is validated by referencing the external certificates managed on this machine.
Expiration Date Confirmation	• Select whether to check that the server certificate is within the validity period. • The OCSP service and CRL (Certificate Revocation List) are checked in this order when the expiration date of the certificate is checked.
CN	Select whether to check that the CN of the server certificate matches the server address.

(10) Register Authentication Server-Authentication Type

(a) Use

- To set the authentication method to logon to LDAP server.

Simple	Simple method which needs the user name and the password.

Digest-MD5	Method available with normal LDAP server. When failing to authenticate with Digest-MD5, it automatically switches to CRAM-MD5.
GSS-SPNEGO	Method available with Windows active directory (Kerberos authentication).
NTLM v1	Standard user authentication format used for Windows NT, etc.
NTLM v2	Standard user authentication format used for Windows NT, etc. It has been applied to the Windows NT4.0 SP4 and later versions. Its security has been enhanced compared to v1.

(b) Default setting

- Simple

(c) Setting item

- "Simple"
- Digest-MD5
- GSS-SPNEGO
- NTLM v1
- NTLM v2

(11) Register Authentication Server-Referral Setting

(a) Use

- To set whether or not to use the referral setting.
- To use when tracing the server with referral at the time of LDAP connection.

(b) Default setting

- ON

(c) Setting item

- "ON"
- OFF

(12) Register Authentication Server-Login Name

(a) Use

- To set the login name to connect to LDAP server.

(b) Procedure

1. Touch [Login Name].
2. Enter the login name (up to 64 characters) on the on-screen keyboard, and touch [OK].

(13) Register Authentication Server-Password

(a) Use

- To set the password for connecting to LDAP server.

(b) Procedure

1. Touch [Password].
2. Enter the password (up to 64 characters) on the on-screen keyboard, and touch [OK].

(14) Register Authentication Server-Domain Name

(a) Use

- To set the domain name for connecting to LDAP server.

(b) Procedure

1. Touch [Domain Name].
2. Enter the domain name (up to 64 characters) on the on-screen keyboard, and touch [OK].

7.41 User Authentication/Account Track - Max. Allowance when Enhanced Server down

7.41.1 Use

- To set whether to manage the maximum allowance for the number of printed sheets or the number of registered user boxes on this machine when the enhanced server has shut down.

7.41.2 Default setting

- ON

7.41.3 Setting item

1. "ON"
2. OFF

3. When selecting [ON], set the maximum value for [Print (Total)], [Personal User Box Allowance], and [Billing Allowance]. To omit setting of the maximum, select [Restrict].

7.42 User Authentication/Account Track - Update Billing Information

7.42.1 Use

- To set whether to overwrite existing billing information if the billing information that can be managed on this machine reached the upper limit when the enhanced server shut down.

7.42.2 Default setting

- OFF

7.42.3 Setting item

- ON
- "OFF"

7.43 Network Settings-TCP/IP Settings

7.43.1 TCP/IP Settings

(1) Use

- To set whether to enable or disable TCP/IP settings.

(2) Default setting

- ON

(3) Setting item

- "ON"
- OFF

7.43.2 IPv4 Settings

(1) Use

- To set whether to enter the IP address (IPv4) directly or to obtain it automatically.

(2) Default setting

- Auto Input

(3) Setting item

- Manual Input
- "Auto Input"

NOTE

- **When it is set to [Auto Input], select the method to obtain it automatically.**

DHCP Settings	• **ON** • **OFF**
BOOTP Settings	• **ON** • **OFF**
ARP/PING Settings	• **ON** • **OFF**
AUTO IP Settings	• **ON** • **OFF**

- **[ARP/PING Settings] and [Auto IP Settings] cannot be set to "OFF" simultaneously.**
- **They will all be set to "ON" when [Manual Input] is changed to [Auto Input].**
- **When it is set to [Manual Input], set the IP address, subnet mask and default gate way.**

7.43.3 IPv6 Settings

(1) IPv6 Settings

(a) Use

- To set whether or not to use IP address (IPv6).
- To set whether to enter the IP address (IPv6) directly or to obtain it automatically.

(b) Default setting

- ON

(c) Setting item

- "ON"
- OFF

(2) Auto IPv6 Settings

(a) Use

- To set whether or not to automatically obtain IP address (IPv6).
  When selecting [OFF], set a global address or gateway address.

(b) Default setting

- ON

(c) Setting item

- "ON"
- OFF

(3) DHCPv6 Setting

(a) Default setting

- ON

(b) Setting item

- "ON"
- OFF

7.43.4 DNS Host

(1) DNS Host Name

(a) Use

- To set the DNS host name.

(b) Procedure

1. Touch [DNS Host Name].
2. Enter the DNS host name on the screen key board, and touch [OK].

(2) Dynamic DNS Settings

(a) Use

- To set whether or not to enable the dynamic DNS setting.

(b) Default setting

- Disable

(c) Setting item

- Enable
- "Disable"

7.43.5 DNS Domain

(1) Domain Name Auto Retrieval

(a) Use

- To set whether or not to enable the auto obtaining for the DNS domain name.
- To set the DNS default domain name.

(b) Default setting

- Enable

(c) Setting item

- "Enable"
- Disable

(2) Search Domain Name Auto Retrieval

(a) Use

- To set whether or not to enable the auto obtaining for the DNS domain name.
- To set the DNS search domain name.

(b) Default setting

- Enable

(c) Setting item

- "Enable"
- Disable

(3) Procedure

- Touch [Default DNS Domain Name] or [DNS Search Domain Name 1 to 3], and enter the domain name using the keyboard on the screen and touch [OK].

7.43.6 DNS Server Settings (IPv4)

(1) DNS Server Auto Obtain

(a) Use

- To set whether or not to enable the auto obtaining of the DNS server address.

(b) Default setting

- Enable

(c) Setting item

- “Enable”
- Disable

(2) Priority/Secondary DNS Server

(a) Use

- To set the Priority DNS server address, Secondary DNS server1 address, and Secondary DNS server 2 address.

(b) Procedure

- Touch the corresponding key, and input the server address.

7.43.7 DNS Server Settings (IPv6)

(1) DNS Server Auto Obtain

(a) Use

- To set whether or not to enable the auto obtaining of the DNS server address.

(b) Default setting

- Enable

(c) Setting item

- “Enable”
- Disable

(2) Priority/Secondary DNS Server

(a) Use

- To set the Priority DNS server address, Secondary DNS server1 address, and Secondary DNS server 2 address.

(b) Procedure

- Touch the corresponding key, and input the server address.

7.43.8 IPsec Settings

(1) Use

- To set whether to use IPsec protocol for IP network communication.

7.43.9 IPsec Settings-IKE Settings-IKEv1 Settings

- To configure the IKE (Internet Key Exchange) protocol settings for IPsec communication.

(1) Encryption Algorithm

(a) Use

- Set an encryption algorithm used for IPsec communication.

(b) Setting item

- DES_CBC
- 3DES_CBC
- AES_CBC

(2) Authentication Algorithm

(a) Use

- Set an authentication algorithm used for IPsec communication.

(b) Setting item

- MD5
- SHA-1

- SHA-2

(3) Diffie-Hellman Group

(a) Use

- To set the Diffie-Hellman group.

(b) Default setting

- Group 2

(c) Setting item

- Groups 1 to 24

(4) Key Validity Period

(a) Use

- Set a key validity period.

(b) Default setting

- 28800 (sec.)

(c) Setting range

- 600 to 604800 (sec.)

(5) Negotiation Mode

(a) Use

- To set the method to securely generate a common key used for encrypted communication.

(b) Default setting

- Main Mode

(c) Setting item

- “Main Mode”
- Aggressive Mode

7.43.10 IPsec Settings-IKE Settings-IKEv2 Settings

(1) Encryption Algorithm

(a) Use

- Set an encryption algorithm used for IPsec communication.

(b) Setting item

- DES_CBC
- 3DES_CBC
- AES_CBC

(2) Authentication Algorithm

(a) Use

- Set an authentication algorithm used for IPsec communication.

(b) Setting item

- MD5
- SHA-1
- SHA-2
- AES-XCBC

(3) Diffie-Hellman Group

(a) Use

- To assign priorities to the Diffie-Hellman groups.

(b) Procedure

- Touch Priority 1 to 4 and assign priorities to the groups.

(4) Key Validity Period

(a) Use

- Set a key validity period.

(b) Default setting

- 28800 (sec.)

(c) Setting range

- 600 to 604800 (sec.)

7.43.11 IPsec Settings-IPsec Settings-IPsec SA Settings

(1) IPsec SA Settings

(a) Use

- To make the settings that relate to IPsec SA (Security Association) which is used for IPsec communication.
- Settings can be made independently for ten different sets (Group 1 to 10).

(2) Group Set Number

(a) Procedure

1. Among Group 1 to 10, select a group where settings are made and touch [Edit].
2. Touch [ON].
3. After touching the key of the Group, make the following settings.
   (If the combination of each selection is not allowed among different settings, the key operation of the corresponding option is locked.)

(3) Group Name

(a) Procedure

- Select [Group Name], enter the SA name (using up to 10 characters).

(4) Encapsulation Mode

(a) Use

- To configure encapsulation mode used in IPsec communication.

(b) Default setting

- Transport Mode

(c) Setting item

- Tunnel Mode
- “Transport Mode”

(5) Tunnel End Point

(a) Use

- If [Tunnel Mode] is selected in [Encapsulation Mode], enter the IP address of the IPsec gateway that is used as a peer.

(b) Procedure

- Touch [IP Address] and enter the IP address with IPv4 or IPv6 format.

(6) Security Protocol

(a) Use

- Set a security protocol.

(b) Setting item

- AH
- ESP

(7) Key Exchange Method-IKEv1/IKEv2

(a) Use

- To set IKE settings used for SA.

General Settings (IKEv1) Local Authentication Method (IKEv2)	• Select an authentication method. • [Pre-Shared Key] is specified by default.
ESN	• Select whether to enable or invalidate the use of ESN (Extended Sequence Number). • [Invalid] is specified by default.
Replay Detection	• Select whether to enable or invalidate replay detection. • [Invalid] is specified by default.
Peer Authentication Method (IKEv2)	• Specify the peer authentication method. • [Pre-Shared Key] is specified by default.
ESP Encryption Algorithm	• Specify an encryption algorithm used in ESP protocol. • [OFF] is specified by default.
ESP Authentication Algorithm	• Specify an authentication algorithm used in ESP protocol. • [OFF] is specified by default.

AH Authentication Algorithm	• Specify an authentication algorithm used in AH protocol. • [OFF] is specified by default.
Perfect Forward Secrecy	• Configure this setting to increase the IKE strength. • [OFF] is specified by default.
Diffie-Hellman Group	• Select the Diffie-Hellman group.

(8) Key Exchange Method-Manual Key

(a) Use

- When using a device that does not support automatic key exchange using IKE, configure each parameter manually.

Encryption Algorithm	• Select the algorithm to be used for encryption.
Authentication Algorithm	• Select the algorithm to be used for authentication.
SA Index	• Specify the SA Security Parameter Index to be added to the IPsec header.
Common Key Encryption	• Specify the common key used for encryption. • You can specify different common keys respectively for send and receive.
Common Key Authentication	• Specify the common key used for authentication. • You can specify different common keys respectively for send and receive.

(9) Lifetime After Establishing SA

(a) Procedure

- Set the period of time starting from when SA connection is established and ending when the SA connection is cut.

(b) Default setting

- 3600 (sec.)

(c) Setting range

- 600 to 604800 (sec.)

7.43.12 IPsec Settings-IPsec Settings-Peer

(1) Peer

(a) Use

- To register destinations used for IPsec communication.
- Settings can be made independently for different ten sets (Group 1 to 10).

(2) Registered Peer

(a) Procedure

1. Among Group 1 to 10, select a group where settings are made and touch [Edit].
2. Touch [ON].
3. After touching the key of the Group, make the following setting.

(3) Group Name

(a) Procedure

- Enter a peer name (using up to 10 characters).

(4) Addressing Mode

(a) Procedure

- To set the addressing mode

(b) Default setting

- Unicast

(c) Setting item

- “Unicast”
- Subnet Settings
- Set Range

(5) IP Address

(a) Use

- Specify the IP address of destinations.

(b) Procedure

- Touch [IP Address] and enter the IP address with IPv4 or IPv6 format.

(6) Pre-Shared Key Text

(a) Use

- Specify a Pre-shared key (Key data).

(b) Procedure

- Touch [Input] and enter the Pre-shared key.

(7) Key-ID String

(a) Use

- Enter the Key-ID to be specified for the Pre-Shared Key

(b) Procedure

- Touch [Input], enter the Key-ID.

7.43.13 IPsec Settings-IPsec Settings-Protocol Setting

(1) Protocol Setting

(a) Use

- To set a protocol used for IPsec communication.
- Settings can be made independently for ten different sets (Group 1 to 10).

(2) Group Set Number

(a) Procedure

1. Among Group 1 to 10, select a group where settings are made and touch [Edit].
2. Touch [ON].
3. After touching the key of the Group, make the following settings.
   (If the combination of each selection is not allowed among different settings, the key operation of the corresponding option is locked.)

(3) Group Name

(a) Procedure

- Select a Group Name and enter a name for the protocol configuration. (Up to 10 one-byte characters)

(4) Protocol Identification Setting

(a) Use

- To set a protocol used for IPsec communication.

(b) Default setting

- Do Not Set

(c) Setting item

- TCP
- UDP
- ICMP
- ICMPv6
- “Do Not Set”

(5) Port Specification Method

(a) Use

- If [TCP] or [UDP] has been selected in [Protocol Identification Setting], specify the port number used for IPsec communication.

Port Number	• To set the Sender Port Number (Setting range 1 to 65535) • To set the Sender Port Number (Setting range 1 to 65535)
Set Range	• To set the Start Number and End Number of the Sender Port Number (Setting range 1 to 65535) • To set the Start Number and End Number of the Sender Port Number (Setting range 1 to 65535)

(6) Message Type

(a) Use

- If [ICMP] or [ICMPv6] is selected in [Protocol Identification Setting], specify the type of ICMP message.

(b) Default setting

- Do Not Set

(c) Setting item

- Echo Request/Reply
- “Do Not Set”

7.43.14 IPsec Settings-Enable IPsec

- This function allows you to select whether or not to use the IPsec protocol in IP network communication.
- This function is used when you use the IPsec protocol to perform encrypted communication.

(1) IPsec Policy

(a) Use

- You can specify criteria used for IP packets so that the IP packets that meet individual criteria can be passed or allowed.
- Settings can be made independently for ten different sets (Group 1 to 10).

(2) Group Set Number

(a) Procedure

1. Select [ON] and touch [IPsec Policy].
2. Among Group 1 to 10, select a group where settings are made and touch [Edit].
3. Touch [ON].
4. After touching the key of the Group, make the following settings.
   (If the combination of each selection is not allowed among different settings, the key operation of the corresponding option is locked.)

(3) Group Name

(a) Procedure

- Enter a name for the IPsec policy (using up to 10 characters).

(4) action

(a) Use

- Select an action to be taken for the IP packets that met [Peer], [Protocol], and [Communication Type].

(b) Default setting

- Protected

(c) Setting item

- “Protected”
- Allow
- Deny
- Cancel

(5) Select Group

(a) Use

- To configure the group settings.

Peer	• Select a peer setting. • Select the setting from those registered in [Peer] in [IPsec Settings].
Protocol	• Select a protocol. • Select the setting from those registered in [Protocol Setting] in [IPsec Settings].
IPsec Setting	• Select a peer setting. • Select the setting from those registered in [IPsec SA Settings] in [IPsec Settings].

(6) Communication Type

(a) Use

- To set a direction of IPsec communication.

(b) Default setting

- Send and Receive

(c) Setting item

- “Send and Receive”
- Send
- Receive

(7) Common Settings

- Configure common settings for IPsec policy.

Cookies	To set whether to enable the defense using Cookies against denial-of-service attacks. [Invalid] is specified by default.
ICMP Pass Settings	To set whether to apply IPsec to the Internet Control Message Protocol (ICMP). Set [Enable] to allow the ICMP packets to pass without applying IPsec to the ICMP. [Invalid] is specified by default.
ICMPv6 Pass Settings	To set whether to apply IPsec to the Internet Control Message Protocol for IPv6 (ICMPv6). Set [Enable] to allow the ICMPv6 packets to pass without applying IPsec to the ICMPv6. [Invalid] is specified by default.
Default action	To set an action to be taken if no settings meet the [IPsec Policy] while IPsec communication is enabled. Set [Deny] to discard IP packets that do not meet the [IPsec Policy] settings. [Allow] is specified by default.
Expiration Date	Select whether to check that the server certificate is within the validity period.
Key Usage	Select whether to check that the server certificate is used according to the purpose approved by the issuer.
Chain	Select whether to check that the server certificate chain (certification path) is correct.
Expiration Date Confirmation	Select whether to check that the server certificate is within the validity period. The OCSP service and CRL (Certificate Revocation List) are checked in this order when the expiration date of the certificate is checked.
Dead Peer Detection	If no response can be confirmed from the peer within a certain period, the SA with the peer is deleted. Set a time that elapses before sending survival confirmation information to the peer who has not responded. [15 sec.] is specified by default.

7.43.15 IPsec Settings-Communication Check

(1) Communication Error Log

(a) Use

- To display IPsec communication error logs.
- By touching [Details], you can check details of logs.

7.43.16 IP Filtering (Permit Access)

(1) Use

- To set the IP filtering (Permit Access).
- To set whether to allow only IP addresses that are within a specified range.

(2) Procedure

1. Select [Enable] or [Disable].
2. When [Enable] is set, select one from Set 1 to Set 5 and specify the range of IP addresses to be allowed using the 10-key pad.
3. Touch [OK].

7.43.17 IP Filtering (Deny Access)

(1) Use

- To set the IP filtering (Deny Access).
- When [Enable] is set, select one from Set 1 to Set 5 and specify the range of IP addresses to be allowed using the 10-key pad.

(2) Procedure

1. Select [Enable] or [Disable].
2. When [Enable] is set, select one from Set 1 to Set 5 and enter the range of IP addresses to be denied using the 10-key pad.
3. Touch [OK].

7.43.18 RAW Port Number

(1) Use

- To set the RAW port number.
- Several data can be accepted at the same time by selecting several ports.

(2) Procedure

1. Select the necessary port number.
2. When using the selected port, touch Clear to clear the value, and enter the RAW port number using the 10-key pad.
3. Touch [OK].

7.43.19 LLMNR Setting

(1) Use

- To set whether or not to enable LLMNR (Linklocal Multicast Name Resolution) setting.
- To perform the name resolution to send data to a computer with Windows Vista/Server 2008 installed, select [Enable].
  To perform the name resolution especially in the IPv6-only communication environment, enable this setting.

(2) Default setting

- Disable

(3) Setting item

- Enable
- “Disable”

7.44 Network Settings-NetWare Settings

7.44.1 IPX Settings

(1) IPX Settings

(a) Use

- To enable or disable the NetWare (IPX) setting.

(b) Default setting

- OFF

(c) Setting item

- ON
- “OFF”

(2) Ethernet Frame Type

(a) Use

- To set the Ethernet frame type.

(b) Default setting

- Auto Detect

(c) Setting item

- “Auto Detect”
- 802.2
- 802.3
- Ethernet II
- 802.3SNAP

7.44.2 NetWare Print Settings

(1) NetWare Print Settings

(a) Use

- To set whether to use the NetWare print mode.

(b) Default setting

- OFF

(c) Setting item

- ON
- “OFF”

(2) NetWare Print Mode

(a) Use

- To set the NetWare print mode.

(b) Default setting

- PServer

(c) Setting item

- “PServer”
- Nprinter/Rprinter

NOTE

- **After selecting either key in the NetWare print mode setting, proceed to each setting screen.**

(3) Status

(a) Use

- To display NetWare status.

(b) Procedure

1. Touch [Status].
2. Touch up/down arrow keys to select the server to check.
3. Check the NetWare status.

7.44.3 PServer Settings: Print Server Name/Print Server Password

(1) Use

- To set the print server name and print server password.

(2) Procedure

1. Touch [Print Server name] or [Print Server Password].
2. Enter the print server name or the print server password (up to 63 characters) using the on-screen keyboard, and touch [Close].

7.44.4 PServer Settings: Polling Interval

(1) Use

- To set the polling interval.
- To set the interval to search the print queue.

(2) Procedure

1. Touch Clear.
2. Enter the polling interval between 1 and 65535 using the 10-key pad.

7.44.5 PServer Settings: NDS/Bindery Setting

(1) Use

- To set whether to enable or disable the bindery setting when using NetWare4.x model and after.
- To enable the bindery service.

(2) Default setting

- NDS

(3) Setting item

- “NDS”
- NDS&Bindery

7.44.6 PServer Settings: File Server Name

(1) Use

- To set the full server name for the print server to logon.

(2) Procedure

1. Touch [File Server Name].
2. Enter the File server name (up to 47 characters) on the on-screen keyboard, and touch [Close].

7.44.7 PServer Settings: NDS Context Name

(1) Use

- To set the NDS context name (context name to register NDS print server).

(2) Procedure

1. Touch [NDS Context name].
2. Enter the NDS context name (up to 191 characters) on the on-screen keyboard, and touch [Close].

7.44.8 PServer Settings: NDS Tree Name

(1) Use

- To set the NDS tree name (name to login).

(2) Procedure

1. Touch [NDS Tree Name].
2. Enter the NDS tree name (up to 63 characters) on the on-screen keyboard, and touch [Close].

7.44.9 Nprinter/Rprinter Settings: Print Server Name

(1) Use

- To set the print server name.

(2) Procedure

1. Touch [Print Server Name].
2. Enter the printer name (up to 63 characters) on the on-screen keyboard, and touch [Close].

7.44.10 Nprinter/Rprinter Settings: Printer Number

(1) Use

- To set the printer number.

(2) Procedure

1. Touch [Auto] and cancel the reverse display.
2. Touch Clear.
3. Enter the number between 0 and 254 using the 10-key pad.

7.44.11 User Authentication Setting (NDS)

(1) Use

- To set whether or not to use the user authentication setting.
- To conduct user authentication in netware environment.

(2) Default setting

- ON

(3) Setting item

- “ON”
- OFF

7.45 Network Settings-HTTP Server Settings

- It will not be displayed when the following setting shows that authentication device 2 is mounted.
  [Service Mode] -> [Billing Setting] -> [Management Function Choice]

7.45.1 HTTP Server Settings

(1) Use

- To set whether or not to use the http server setting.

(2) Default setting

- ON

(3) Setting item

- “ON”
- OFF

7.45.2 PSWC Settings

(1) Use

- To set whether to use the PageScope Web Connection.

NOTE

- **To use the PageScope Web Connection, enable "JavaScript" and "Cookie" of the Web browser.**
- **If this machine is connected to the internet via a proxy server, register the Proxy Settings of the Web browser as "Exceptions".**
- **When the PageScope Web Connection is not displayed properly even if the above settings have been conducted, delete the cache of the Web browser.**

(2) Default setting

- ON

(3) Setting item

- “ON”
- OFF

7.45.3 IPP Settings

(1) Use

- To set whether to enable or disable IPP (Internet Printing Protocol) setting.

(2) Default setting

- ON

(3) Setting item

- “ON”
- OFF

7.45.4 Accept IPP Jobs

(1) Use

- To set whether to allow or restrict the IPP job.

(2) Default setting

- ON

(3) Setting item

- “ON”
- OFF

7.45.5 Support Information

(1) Use

- To set the operation support information.
- For the response setting to see if IPP transmission supports each function.

(2) Procedure

1. Touch [Support Information].
2. Set “ON” or OFF for each item.

7.45.6 Printer Information

(1) Use

- To set the printer information.

(2) Procedure

1. Touch [Printer Information].
2. Enter the printer name, printer location, and printer information on the on-screen keyboard.
3. Touch [Print URI] to check the printer URI information.

7.45.7 IPP Authentication Settings

(1) Use

- To set whether or not to use the IPP authentication setting.

(2) Default setting

- ON

(3) Setting item

- “ON”
- OFF

7.45.8 General Settings

(1) Use

- To set the authentication method for IPP authentication.

(2) Default setting

- requesting-user-name

(3) Setting item

- “requesting-user-name”
- basic
- digest

7.45.9 User Name

(1) Use

- To set the User name for IPP authentication.

(2) Procedure

1. Touch [User Name].
2. Enter the user name on the on-screen keyboard, and touch [OK].

7.45.10 Password

(1) Use

- To set the password for IPP authentication.

(2) Procedure

1. Touch [Password].
2. Enter the password on the on-screen keyboard, and touch [OK].

7.45.11 realm

(1) Use

- To set the realm for identifying the authentication setting for IPP authentication.

(2) Procedure

1. Touch [realm].
2. Enter the realm on the on-screen keyboard, and touch [OK].

7.46 Network Settings-FTP Settings

7.46.1 FTP TX Settings

(1) Use

- To set whether to use FTP TX settings.

(2) Default setting

- ON

(3) Setting item

- "ON"
- OFF

7.46.2 FTP TX Settings: Proxy Server Address

(1) Use

- To set the proxy server address.

(2) Procedure

1. Touch [Host Address].
2. Select [Input Host Name], [IPv4 Address Input], or [IPv6 Address Input] and enter a host address.

7.46.3 FTP TX Settings: Proxy Server Port Number

(1) Use

- To set the proxy server port number.

(2) Procedure

1. Touch Clear.
2. Enter the proxy server port number between 1 and 65535 using the 10-key pad.

7.46.4 FTP TX Settings: Port No.

(1) Use

- To set the port number to be used for transmission with FTP server.

(2) Procedure

1. Touch [Input].
2. Touch Clear.
3. Enter the proxy server port number between 1 and 65535 using the 10-Key pad.

7.46.5 FTP TX Settings: Connection Timeout

(1) Use

- To set the timeout period for connecting to FTP server.

(2) Procedure

1. Touch [Input].
2. Touch Clear.
3. Enter the connecting timeout period between 5 and 300 using the 10-key pad.

7.46.6 FTP Server Settings

(1) Use

- To set whether to use the FTP server of the machine for acquiring the print job data saved with Print Data Capture function.

(2) Default setting

- ON

(3) Setting item

- "ON"
- OFF

NOTE

- **If [Administrator Settings] -> [Security Settings] -> [Enhanced Security Mode] or [Image Log Transfer Settings] is set to "ON", selecting "ON" in this setting cancels enhanced security mode.**

7.46.7 FTP Server Settings-Deny Reception Command

(1) Use

- Select a command to deny a receiving job from an FTP client when using the FTP server of this machine.

(2) Default setting

- Allow

(3) Setting item

- “Allow”
- PASV/EPSV
- PORT/EPRT

7.46.8 FTP Server Settings-PORT Command Enhanced Security

(1) Use

- To set whether to enable the security of this machine against FTP bounce attacks.
- This option is not available if [Deny Reception Command] is set to [PORT/EPRT].

(2) Default setting

- Enable

(3) Setting item

- Invalid
- “Enable”

7.47 Network Settings-SMB Settings

SMB Setting

- It will not be displayed when the following setting shows that authentication device 2 is mounted.
  [Service Mode] -> [Billing Setting] -> [Management Function Choice]

7.47.1 Client Settings

(1) Client Settings

(a) Use

- To set whether or not to use the SMB transmission setting.

(b) Default setting

- ON

(c) Setting item

- “ON”
- OFF

(2) SMB Authentication Setting

(a) Use

- To set the NTLM version for the user authentication.
  NTLM has v1 and v2. Select the version which suits the network environment.
- [Kerberos]: Select this to use the function in the Active Directory domain environment.

(b) Default setting

- NTLM v1

(c) Setting item

- “NTLM v1”
- NTLM v2
- NTLM v1/v2
- Kerberos

(3) Authentication Setting if Kerberos Fails

(a) Use

- To specify the operation enabled when Kerberos authentication fails.

(b) Default setting

- Disable NTLM

(c) Setting item

- Enable NTLM v1/v2

- "Disable NTLM"

(4) User Authentication (NTLM)

(a) Use

- To set whether or not to enable the user authentication setting by NTLM.

(b) Default setting

- ON

(c) Setting item

- "ON"
- OFF

(5) DFS Setting

(a) Default setting

- ON

(b) Setting item

- "ON"
- OFF

NOTE

- **Select [ON] when using SMB transmission under an environment that uses a distributed file system (DFS).**
- **DFS function is supported only in the environment that structured with the following Windows server operating systems.**
  - **Windows Server 2003 each edition, Windows Server 2008, Windows Server 2008 R2, Windows Server 2012**

(6) Single Sign-on Setting-Default Domain Name

(a) Use

- Enter the default domain name to be added to the host name of the destination at SMB transmission (using up to 64 characters).
- If the domain name of the destination is not specified by the user when sending data using SMB, the domain name specified here is added.
- This item is not required when Active Directory is used as an authentication server.

(b) Procedure

- Touch [Default Domain Name], enter the default domain name.

(7) Single Sign-on Setting-SMB User Credential Setting

(a) Use

- To set whether to use the user authentication information (login name and password) of this machine as SMB destination authentication information (host name and password).

(b) Default setting

- OFF

(c) Setting item

- ON
- "OFF"

(8) Single Sign-on Setting-Edit SMB User Credentials

(a) Use

- If you have selected [ON] at [SMB User Credential Setting], select whether to allow registration of the SMB destination including authentication information same as that for user authentication.

(b) Default setting

- Restrict

(c) Setting item

- Allow
- "Restrict"

7.47.2 SMB Server Settings

(1) SMB Server Settings

- Configure the settings to operate this machine as the SMB server.
- Specify the SMB protocol to be supported, or configure the setting for SMB printing or SMB file sharing.

(a) Default setting

- OFF

(b) Setting item

- ON
- "OFF"

(2) SMB Server Common Settings

- Configure common settings to use the machine as an SMB server.

<SMB Host Name>

- Enter the host name of this machine (using up to 15 characters).

<Workgroup>

- Enter the name of the workgroup that contains this machine (using up to 15 characters).

<SMB Authentication Protocol>

- [WORKGROUP] is specified by default. SMB Authentication Protocol Select the SMB authentication protocol to be used in the machine. In Windows Vista and after, select [SMB1.0/SMB2.0] to use the SMB2.0 protocol. [SMB1.0] is specified by default.

(3) SMB Print Setting

(a) Use

- To set whether to use the SMB print function.

(b) Default setting

- OFF

(c) Setting item

- ON
- "OFF"
- If [ON] is selected, enter a print service name (using up to 12 characters)

(4) Share SMB File Setting

(a) Use

- To set whether to use the Share SMB File function.
- Using the Share SMB File function allows you to share the scanned files by Box/Scan/Fax functions in the Public User Box of this machine with PCs on the network.

(b) Default setting

- OFF

(c) Setting item

- ON
- "OFF"

NOTE

- **How to use Share SMB file function**
  1. **Set 'ON' of the 'Auto Save Document to MFP Shared Folder' in the Public User Box setting.**
  2. **Scan and save a file by Box/Scan/Fax function into the Public User Box which is configured with 'ON' of the 'Auto Save Document to MFP Shared Folder'.**
  3. **Browse the Public User Box as '\\SMB_host_ame (or IP address of MFP)\9-digit User Box number_User Box name' from PC.**
  4. **Put ID: User Box number, Password: Password specified for the Public User Box for the authentication to open the folder.**
- **Refer to I.7.10.11 Document in MFP Shared Folder Delete Time Setting for the data deletion setting.**

7.47.3 WINS/NetBIOS Settings

(1) Use

- To set whether or not to enable the WINS setting.
- To use the WINS (Windows Internet Name Service) setting is necessary.
- By using the WINS, the traffic by broadcast can be reduced, and the communication becomes available with the network where broadcast does not reach.

(2) Default setting

- ON

(3) Setting item

- "ON"
- OFF

7.47.4 WINS/NetBIOS Settings: Automatic Retrieval Settings

(1) Use

- To set whether or not to enable the auto obtaining of the WINS server address.
- To acquire the WINS server address automatically.
- To obtain the WINS server address from DHCP server. If there are more than on address settings, up to two can be acquired.

(2) Default setting

- Enable

(3) Setting item

- “Enable”
- Disable

7.47.5 WINS/NetBIOS Settings: WINS Server Address1, 2

(1) Use

- To set the WINS server address.
- To use when manually entering the WINS server address.
- The primary address and the secondary address can be set.
  (The primary address has the priority during operation.)

(2) Procedure

1. Touch [1] or [2].
2. Enter the WINS server address.

7.47.6 WINS/NetBIOS Settings: Node Type Setting

(1) Use

- To set a node type.

(2) Default setting

- H Node

(3) Setting item

- B Node
- P Node
- M Node
- “H Node”

7.47.7 Direct Hosting Setting

(1) Use

- To set whether or not to enable the direct hosting setting.

(2) Default setting

- ON

(3) Setting item

- “ON”
- OFF

7.48 Network Settings-LDAP Settings

- It will not be displayed when the following setting shows that authentication device 2 is mounted.
  [Service Mode] -> [Billing Setting] -> [Management Function Choice]

7.48.1 Enabling LDAP

(1) Use

- To set whether to enable or disable the LDAP function.

(2) Default setting

- OFF

(3) Setting item

- ON
- “OFF”

7.48.2 Setting Up LDAP

- Registration and/or setting concerning the LDAP server can be conducted.
- Touch [Setting Up LDAP], and select the optional blank key to register and/or set.

7.48.3 Setting Up LDAP-LDAP Server Name

(1) Use

- Set the LDAP server name.

(2) Procedure

1. Touch [Server Name].
2. Enter the server name (up to 32 one-byte characters) on the on-screen keyboard, and touch [OK].

7.48.4 Setting Up LDAP-Max. Search Results

(1) Use

- To set the Max. results of address for LDAP search.

(2) Procedure

1. Touch [Max. Search Results].
2. Touch Clear.
3. Enter the Max. Search result numbers between 5 and 1000 using the 10-key pad.

7.48.5 Setting Up LDAP-Timeout

(1) Use

- To set the timeout period for LDAP search.

(2) Procedure

1. Touch [Timeout].
2. Touch Clear.
3. Enter the timeout period between 5 and 300 using the 10-key pad.

7.48.6 Setting Up LDAP-Initial Setting for Search Details

(1) Use

- To set the initial items for search conditions in LDAP detail search.

(2) Procedure

1. Touch [Initial Setting for Search Details].
2. Touch the key about condition for each search item, and select the condition.

7.48.7 Setting Up LDAP-Change Search Attribute

(1) Use

- To set attributes to be specified when performing the LDAP search.

(2) Default setting

- Name

(3) Setting item

- “Name”
- Nickname

7.48.8 Setting Up LDAP-Search

(1) Use

- Select [ON] to display candidate destinations when entering a part of the name to search for a destination via the LDAP server.

(2) Default setting

- OFF

(3) Setting item

- ON
- “OFF”

7.48.9 Setting Up LDAP-Check Connection

- It will not be displayed when [Enabling LDAP] is set to “OFF.”
- It will not be displayed when the following is set to “Restrict.”
  [Administrator Settings] -> [Security Settings] -> [Security Details] -> [Manual Destination Input]

(1) Use

- To check the connection with the LDAP server which has been set.

(2) Procedure

1. Touch [Check Connection].
2. Confirm a proper connection and touch [Close].

7.48.10 Setting Up LDAP-Reset All Settings

(1) Use

- To return the contents registered in the LDAP server to what they were prior to the shipping.

(2) Procedure

1. Touch [Reset All Settings].
2. Check the message and touch [Yes].
3. Touch [OK].

7.48.11 Setting Up LDAP-Server Address

(1) Use

- To set the LDAP server address.

(2) Procedure

1. Touch [Server Address].
2. Select [Input Host Name], [IPv4 Address Input] or [IPv6 Address Input], and enter the server address.

7.48.12 Setting Up LDAP-Search Base

(1) Use

- To set the directory path for LDAP server.

(2) Procedure

1. Touch [Search Base].
2. Enter the search base (up to 255 characters) on the on-screen keyboard, and touch [OK].

7.48.13 Setting Up LDAP-SSL Setting

(1) Use

- To set whether to use SSL (data encryption) for connecting to LDAP server.

(2) Default setting

- OFF

(3) Setting item

- ON
- “OFF”

7.48.14 Setting Up LDAP-Port Number

(1) Use

- To set the LDAP server port number.

(2) Procedure

1. Touch [Input].
2. Touch Clear.
3. Enter the port number between 1 and 65535 using the 10-Key pad.

7.48.15 Setting Up LDAP-Port Number (SSL)

(1) Use

- To set the port number for LDAP server when using SSL.

(2) Procedure

1. Touch [Input].
2. Touch Clear.
3. Enter the port number between 1 and 65535 using the 10-Key pad.

7.48.16 Setting Up LDAP-Certificate Verification Level Settings

(1) Use

- To verify the server certificate, configure settings to verify the certificate.

(2) Procedure

Expiration Date	Select whether to check that the server certificate is within the validity period.
Key Usage	Select whether to check that the server certificate is used according to the purpose approved by the issuer.
Chain	• Select whether to check that the server certificate chain (certification path) is correct. • The chain is validated by referencing the external certificates managed on this machine.
Expiration Date Confirmation	• Select whether to check that the server certificate is within the validity period.

	• The OCSP service and CRL (Certificate Revocation List) are checked in this order when the expiration date of the certificate is checked.
CN	Select whether to check that the CN of the server certificate matches the server address.

7.48.17 Setting Up LDAP-Authentication Type

(1) Use

- To set the authentication method to logon to LDAP server.

Anonymous	User name and password are not necessary. (Dynamic authentication will be invalid when anonymous is selected.)
Simple	Simple method which needs the user name and the password.
Digest-MD5	Method available with normal LDAP server. When failing to authenticate with Digest-MD5, it automatically switches to CRAM-MD5.
GSS-SPNEGO	Method available with Windows active directory (Kerberos authentication).
NTLM v1	Standard user authentication format used for Windows NT, etc.
NTLM v2	Standard user authentication format used for Windows NT, etc. It has been applied to the Windows NT4.0 SP4 and later versions. Its security has been enhanced compared to v1.

(2) Default setting

- Anonymous

(3) Setting item

- “Anonymous”
- Simple
- Digest-MD5
- GSS-SPNEGO
- NTLM v1
- NTLM v2

7.48.18 Setting Up LDAP-Select Server Authentication Method

(1) Use

- To set the authentication system when conducting LDAP server authentication.
- To use when changing the server authentication system.

Use Settings	It conducts authentication with the setting value set by [LDAP Server Registration].
Use User Authentication	It conducts authentication with the registration data for the copier’s user authentication.
Dynamic Authentication	It conducts authentication by dynamic authentication.

(2) Default setting

- Use Settings

(3) Setting item

- “Use Settings”
- Use User Authentication
- Dynamic Authentication

7.48.19 Setting Up LDAP-Referral Setting

(1) Use

- To set whether or not to use the referral setting.
- To use when tracing the server with referral at the time of LDAP connection.

(2) Default setting

- ON

(3) Setting item

- “ON”
- OFF

7.48.20 Setting Up LDAP-Login Name

(1) Use

- To set the login name to connect to LDAP server.

(2) Procedure

1. Touch [Login Name].
2. Enter the login name (up to 64 characters) on the on-screen keyboard, and touch [OK].

NOTE
- **The setting is not available when authentication method is set to anonymous.**

7.48.21 Setting Up LDAP-Password

(1) Use
- To set the password for connecting to LDAP server.

(2) Procedure
1. Touch [Password].
2. Enter the password (up to 64 characters) on the on-screen keyboard, and touch [OK].

NOTE
- **The setting is not available when authentication method is set to anonymous.**

7.48.22 Setting Up LDAP-Domain Name

(1) Use
- To set the domain name for connecting to LDAP server.

(2) Procedure
1. Touch [Domain Name].
2. Enter the domain name (up to 64 characters) on the on-screen keyboard, and touch [OK].

7.48.23 Setting Up LDAP-Search Attributes Authentication

(1) Use
- To set whether to enable the attribute-based authentication when [Authentication Type] is set to [Simple] and [Select Server Authentication Method] to [Dynamic Authentication].

(2) Default setting
- No Limit

(3) Setting item
- Enable
- “No Limit”

7.48.24 Setting Up LDAP-Search Attribute(s)

(1) Use
- To enter the search attribute to be automatically added before the user name.

(2) Procedure
1. Touch [Edit].
2. In normal circumstances, specify “uid” before the user name, however, depending on your environment, you need to specify other attribute such as “cn”.

7.48.25 Default LDAP Server Setting

(1) Use
- To set the server to be used as the default when searching LDAP.

(2) Procedure
1. Touch [Default LDAP Server Setting].
2. Select the optional server.

7.48.26 Default Search Result Display Setting

(1) Use
- Select which of the following must be preferentially displayed, the fax number or E-mail address, as a result of LDAP search.

(2) Default setting
- E-Mail

(3) Setting item
- “E-Mail”
- Fax

7.49 Network Settings-E-Mail Settings-E-Mail TX (SMTP)

- It will not be displayed when the following setting shows that authentication device 2 is mounted.
  [Service Mode] -> [Billing Setting] -> [Management Function Choice]

7.49.1 E-Mail TX (SMTP)

(1) Use

- To set whether to enable or disable the e-mail transmission setting.

(2) Default setting

- OFF

(3) Setting item

- ON
- “OFF”

7.49.2 Scan to E-mail

(1) Use

- To set whether or not to transfer scanned data by e-mail.

(2) Default setting

- OFF

(3) Setting item

- ON
- “OFF”

7.49.3 Status Notification

(1) Use

- To set whether or not to inform the status by e-mail.

(2) Default setting

- OFF

(3) Setting item

- ON
- “OFF”

7.49.4 Total Counter Notification

(1) Use

- To set whether or not to inform the total counter by e-mail.

(2) Default setting

- OFF

(3) Setting item

- ON
- “OFF”

7.49.5 SMTP Server Address

(1) Use

- To set the SMTP server address.

(2) Procedure

1. Touch [Host Address].
2. Select [Input Host Name], [IPv4 Address Input] or [IPv6 Address Input], and enter the server address.

7.49.6 Binary Division

(1) Use

- To set whether to carry out binary division for data to be transmitted.

(2) Default setting

- OFF

(3) Setting item

- ON
- “OFF”

7.49.7 Divided Mail Size

(1) Use

- To set the dividing size when carrying out the binary division for data to be transmitted.
- To change the dividing size of the data.

(2) Procedure

1. Touch Clear.
2. Enter the dividing mail size between 100 and 15000 (in 100 increments) using the 10-key pad.

7.49.8 Connection Timeout

(1) Use

- To set the timeout period for connection in transmitting e-mail to SMTP server.

(2) Procedure

- Select the timeout period using [+] / [-] keys.

(3) Default setting

- 60 sec.

(4) Setting range

- 30 to 300, in 30 sec. increments

7.49.9 Server Capacity

(1) Use

- To set the Max. capacity per mail which SMTP server can receive.

(2) Default setting

- No Limit

(3) Setting item

- “No Limit”
- 1 to 100

7.49.10 SSL/TLS Settings

(1) Use

- To set whether or not to use SSL/TLS when sending an e-mail.

(2) Default setting

- OFF

(3) Setting item

- SMTP over SSL
- Start TLS
- “OFF”

7.49.11 Port No.

(1) Use

- To set the port number for transmission with SMTP server.

(2) Procedure

1. Touch [Input].
2. Touch Clear.
3. Enter the port number between 1 and 65535 using the 10-key pad.

7.49.12 Port Number (SSL)

(1) Use

- To set the port number when using SSL.

(2) Procedure

1. Touch [Input].
2. Touch Clear.
3. Enter the port number (SSL) between 1 and 65535 using the 10-key pad.

7.49.13 Certificate Verification Level Settings

(1) Use

- To verify the server certificate, configure settings to verify the certificate.

(2) Procedure

Expiration Date	Select whether to check that the server certificate is within the validity period.
Key Usage	Select whether to check that the server certificate is used according to the purpose approved by the issuer.
Chain	Select whether to check that the server certificate chain (certification path) is correct. The chain is validated by referencing the external certificates managed on this machine.
Expiration Date Confirmation	Select whether to check that the server certificate is within the validity period. The OCSP service and CRL (Certificate Revocation List) are checked in this order when the expiration date of the certificate is checked.
CN	Select whether to check that the CN of the server certificate matches the server address.

7.49.14 Detail Settings: SMTP Authentication

(1) Use

- To set whether or not to enable SMTP authentication.

(2) Default setting

- OFF

(3) Setting item

- ON
- “OFF”

NOTE

- **When set to "ON", enter the [User ID], [Password], [Domain Name], [Authentication Setting], and [SMTP Authentication Method].**

7.49.15 Detail Settings: POP Before SMTP Authentication

(1) Use

- To set whether or not to enable the POP Before SMTP authentication.

(2) Default setting

- OFF

(3) Setting item

- ON
- “OFF”

7.49.16 Detail Settings: POP Before SMTP Time

(1) Use

- To set the time necessary for POP Before SMTP authentication.

(2) Procedure

1. Touch [Input].
2. Touch Clear.
3. Enter the time for POP Before SMTP between 0 and 60 using the 10-key pad.

7.50 Network Settings-E-Mail Settings-E-Mail RX (POP)

- It will not be displayed when the following setting shows that authentication device 2 is mounted.
  [Service Mode] -> [Billing Setting] -> [Management Function Choice]

7.50.1 E-Mail RX (POP)

(1) Use

- To set whether to enable or disable the e-mail reception setting.

(2) Default setting

- ON

(3) Setting item

- “ON”
- OFF

7.50.2 POP Server Address

(1) Use

- To set the POP server address.

(2) Procedure

1. Touch [Host Address].
2. Select [Input Host Name], [IPv4 Address Input] or [IPv6 Address Input], and enter the server address.

7.50.3 Connection Timeout

(1) Use

- To set the timeout period for connection in receiving e-mail to POP server.

(2) Procedure

- Select the timeout period of connection using [+] / [-] keys.

(3) Default setting

- 30 sec.

(4) Setting range

- 30 to 300, in 30 sec. increments

7.50.4 SSL Setting

(1) Use

- To set whether or not to use SSL when receiving an e-mail.

(2) Default setting

- OFF

(3) Setting item

- ON
- “OFF”

7.50.5 Port No.

(1) Use

- To set the port No. for transmitting with POP server.

(2) Procedure

1. Touch [Input].
2. Touch Clear.
3. Enter the port No. between 1 and 65535 using the 10-key pad.

7.50.6 Port Number (SSL)

(1) Use

- To set the port number when using SSL.

(2) Procedure

1. Touch [Input].
2. Touch Clear.
3. Enter the port number (SSL) between 1 and 65535 using the 10-key pad.

7.50.7 Certificate Verification Level Settings

(1) Use

- To verify the server certificate, configure settings to verify the certificate.

(2) Procedure

Expiration Date	Select whether to check that the server certificate is within the validity period.
Key Usage	Select whether to check that the server certificate is used according to the purpose approved by the issuer.
Chain	• Select whether to check that the server certificate chain (certification path) is correct. • The chain is validated by referencing the external certificates managed on this machine.
Expiration Date Confirmation	• Select whether to check that the server certificate is within the validity period. • The OCSP service and CRL (Certificate Revocation List) are checked in this order when the expiration date of the certificate is checked.
CN	Select whether to check that the CN of the server certificate matches the server address.

7.50.8 Login Name

(1) Use

- To enter a login name used for POP server authentication.

(2) Procedure

1. Touch [Login Name].
2. Enter a login name.

7.50.9 Password

(1) Use

- To enter a login name used for POP server authentication.

(2) Procedure

1. Touch [Password].
2. Enter a password.

7.50.10 APOP Authentication

(1) Use

- To set whether to use APOP authentication.

(2) Default setting

- OFF

(3) Setting item

- ON
- “OFF”

7.50.11 Check for New Messages

- It will not be displayed when either [Internet Fax Function] is set to “OFF” in the following settings.
  [Administrator Settings] -> [Network Setting] -> [Network Fax Settings] -> [Network Fax Function Settings]

(1) Use

- To set whether to automatically check a POP server for new messages.

(2) Default setting

- Yes

(3) Setting item

- “Yes”
- No

7.50.12 Polling Interval

- It will not be displayed when either [Internet Fax Function] is set to “OFF” in the following settings.
  [Administrator Settings] -> [Network Setting] -> [Network Fax Settings] -> [Network Fax Function Settings]

(1) Use

- To set a polling interval at which a POP server is checked for new messages.

(2) Default setting

- 15 minutes

(3) Setting range

- 1 to 60 minutes

7.51 Network Settings-E-Mail Settings-E-Mail RX Print

7.51.1 E-mail RX Print

- This is displayed only when the optional i-Option LK-110 and the Upgrade Kit UK-204 have been activated.

(1) Use

- To set whether to use the E-mail RX Print function.
- To print an E-mail attachment, send an E-mail to the E-mail address of this machine.

(2) Default setting

- OFF

(3) Setting item

- ON
- "OFF"

7.51.2 E-mail RX Permission

(1) Use

- To set whether to restrict E-mail addresses that are available for the E-mail RX Print function.

(2) Default setting

- OFF

(3) Setting item

- ON
- "OFF"
- If [ON] is selected, enter the E-mail address to permit the E-mail RX Print function, or enter the E-mail domain.

7.51.3 Save in User Box

(1) Use

- To set whether to save the E-mail attachment received on this machine to a User Box.

(2) Default setting

- OFF

(3) Setting item

- ON
- "OFF"
- If [ON] is selected, specify the number of the User Box to save an E-mail attachment in. When you receive an encrypted PDF file as an E-mail attachment, the file is saved in the Password Encrypted PDF User Box.

7.51.4 E-Mail Body Print

- This is displayed only when Switch No. "152" is set to "01" in HEX Assignment in [Service Mode] -> [System 2] -> [Software Switch Setting].
- This function supports the following languages.
  - English, French, Italian, Germany, Spanish

(1) Use

- To set whether to print the E-mail body received on this machine.

(2) Default setting

- OFF

(3) Setting item

- ON
- "OFF"

7.52 Network Settings-E-Mail Settings-S/MIME Communication Settings

7.52.1 S/MIME Communication Settings

(1) Use

- To set whether to activate S/MIME communication that provides encrypted E-mail transmission.

(2) Default setting

- OFF

(3) Setting item

- ON
- "OFF"

7.52.2 Digital Signature

(1) Use

- Set whether to add a digital signature to S/MIME messages.

(2) Default setting

- Do not add signature

(3) Setting item

- "Do not add signature"
- Always add signature

- Select when sending

7.52.3 E-Mail Text Encryption Method

(1) Use

- To select an encryption method used for S/MIME E-mail text.

(2) Default setting

- 3DES

(3) Setting item

- RC2-40
- RC2-64
- RC2-128
- DES
- “3DES”
- AES-128
- AES-192
- AES-256

7.52.4 Print S/MIME Information

(1) Use

- To select whether to print S/MIME information when sending and receiving E-mail.

(2) Default setting

- No

(3) Setting item

- Yes
- “No”

7.52.5 Automatically Obtain Certificates

(1) Use

- To set whether to automatically acquire a certificate when sending or receiving E-mail.

(2) Default setting

- No

(3) Setting item

- Yes
- “No”

7.52.6 Certificate Verification Level Settings

(1) Use

- To verify the server certificate, configure settings to verify the certificate.

(2) Procedure

Expiration Date	Select whether to check that the server certificate is within the validity period.
Key Usage	Select whether to check that the server certificate is used according to the purpose approved by the issuer.
Chain	• Select whether to check that the server certificate chain (certification path) is correct. • The chain is validated by referencing the external certificates managed on this machine.
Expiration Date Confirmation	• Select whether to check that the server certificate is within the validity period. • The OCSP service and CRL (Certificate Revocation List) are checked in this order when the expiration date of the certificate is checked.

7.52.7 Digital Signature Type

(1) Use

- To add digital signature when sending E-mails, select a digital signature type.

(2) Default setting

- SHA-1

(3) Setting item

- “SHA-1”
- SHA-256

7.53 Network Settings-SNMP Settings

7.53.1 SNMP Settings

(1) SNMP Settings

(a) Use

- To set whether to use SNMP (Simple Network Management Protocol) or not.
- To set the SNMP version to be used.
- To readout management information base and to enter community name for writing.

(b) Default setting

- ON

(c) Setting item

- "ON"
- OFF

(2) SNMP v1/v2c (IP)

(a) Use

- To set whether or not to use SNMP v1/v2c (IP).

(b) Default setting

- ON

(c) Setting item

- "ON"
- OFF

(3) SNMP v3 (IP)

(a) Use

- To set whether or not to use SNMP v3 (IP).

(b) Default setting

- ON

(c) Setting item

- "ON"
- OFF

(4) SNMP v1 (IPX)

(a) Use

- To set whether or not to use SNMP v1 (IPX).

(b) Default setting

- ON

(c) Setting item

- "ON"
- OFF

7.53.2 UDP Port Number

(1) Use

- To set the UDP standby port number which is used for SNMP (IP).

(2) Procedure

1. Touch Clear.
2. Enter the port number between 1 and 65535 using the 10-key pad.

7.53.3 SNMP v1/v2c Settings

(1) Use

- To conduct setting when using SNMP v1/v2c.
- To use when entering the community name for reading the Management Information Base (MIB) and writing to it.

(2) Read Community Name Settings

(a) Procedure

- Enter a read community name.

(3) Write Setting

(a) Default setting

- Enable

(b) Setting item

- "Enable"
- Invalid

NOTE

- **If [Administrator Settings] -> [Security Settings] -> [Enhanced Security Mode] is set to "ON", selecting "Enable" in this setting cancels enhanced security mode.**

(4) Write Community Name Settings

(a) Procedure

- Enter a write community name.

7.53.4 SNMP v3 Settings

(1) Context Name Settings

(a) Use

- Set the context name which is used for SNMP v3.

(b) Procedure

1. Touch [Context Name].
2. Enter the context name (up to 64 characters) on the on-screen key board, and touch [OK].

(2) Discovery User Permissions

(a) Use

- To set whether or not to enable the discovery authority user which is used for SNMP v3.

(b) Default setting

- ON

(c) Setting item

- "ON"
- OFF

(3) Discovery User Name Settings

(a) Use

- To set the name of the discovery authority users which is used for SNMP v3.

(b) Procedure

1. Touch [Discovery User Name].
2. Enter the discovery user name (up to 32 characters) on the on-screen keyboard, and touch [OK].

NOTE

- **The user name same with the read user name or the write user name cannot be set.**

(4) Read User Name Settings

(a) Use

- To set the read-only user name used for SNMP v3.

(b) Procedure

1. Touch [Read User Name].
2. Enter the read user name (up to 32 characters) on the on-screen keyboard, and touch [OK].

NOTE

- **The user Name same with the discovery user name cannot be used.**

(5) Security Level

(a) Use

- To set the security level of the read-only user used for SNMP v3.

OFF	No authentication will be conducted when the read-only user accesses.
auth-password	Conducts authentication only for the authentication password when the read-only user accesses.
auth-password/priv-password	Conducts authentication by authentication password and privacy password when read-only user accesses.

(b) Default setting

- auth-password/priv-password

(c) Setting item

- OFF
- auth-password
- “auth-password/priv-password”

(6) Password Setting

(a) Use

- To set the authentication password for the read-only user which is used for SNMP v3.

(b) Procedure

1. Select a type of password.
2. Enter the password (up to 32 characters) on the on-screen keyboard, and touch [OK].

(7) Write User Name Settings

(a) Use

- To set the name of the reading/writing authority user which is used for SNMP v3.

(b) Procedure

1. Touch [Write User Name].
2. Enter the write user name (up to 32 characters) on the on-screen keyboard, and touch [OK].

NOTE

- **The user name same with the discovery use name cannot be used.**

(8) Security Level

(a) Use

- To set the security level for the reading/writing authority user which is used for SNMP v3.

OFF	Authentication will not be conducted when reading/writing authority user accesses.
auth-password	Conducts authentication only with authentication password when reading/writing authority user accesses.
auth-password/priv-password	Conducts authentication by authentication password and privacy password when reading/writing authority user accesses.

(b) Default setting

- auth-password/priv-password

(c) Setting item

- OFF
- auth-password
- “auth-password/priv-password”

NOTE

- **If [Administrator Settings] -> [Security Settings] -> [Enhanced Security Mode] is set to “ON”, selecting “OFF” in this setting cancels enhanced security mode.**

(9) Password Setting

(a) Use

- To set the authentication password for the read-only user which is used for SNMP v3.

(b) Procedure

1. Select a type of password.
2. Enter the password (up to 32 characters) on the on-screen keyboard, and touch [OK].

(10) Encryption Algorithm

(a) Use

- To set the encryption algorithm in SNMPv3 communication.

(b) Default setting

- DES

(c) Setting item

- “DES”
- AES-128

(11) Authentication Algorithm

(a) Use

- To set the authentication algorithm in SNMPv3 communication.

(b) Default setting

- MD5

(c) Setting item

- “MD5”
- SHA-1

7.53.5 TRAP Setting

(1) Use

- To set whether or not to allow the TRAP function.

(2) Default setting

- Allow

(3) Setting item

- “Allow”
- Restrict

7.53.6 TRAP Setting When Authentication Failed

(1) Use

- To set whether or not to enable the TRAP function when authentication failed.

(2) Default setting

- Invalid

(3) Setting item

- Enable
- “Invalid”

7.54 Network Settings-AppleTalk Settings

- It will not be displayed when the following setting shows that authentication device 2 is mounted.
  [Service Mode] -> [Billing Setting] -> [Management Function Choice]

7.54.1 AppleTalk Settings

(1) Use

- To set whether to enable or disable the AppleTalk setting.

(2) Default setting

- OFF

(3) Setting item

- ON
- “OFF”

7.54.2 Printer Name

(1) Use

- To set the printer name displayed on the AppleTalk network.

(2) Procedure

1. Touch [Printer Name].
2. Enter the printer name (up to 31 characters) on the on-screen keyboard, and touch [OK].

7.54.3 Zone Name

(1) Use

- To set the zone name connected with AppleTalk network.

(2) Procedure

1. Touch [Zone Name].
2. Enter the zone name (up to 31 characters) on the on-screen keyboard, and touch [OK].

7.54.4 Current Zone

(1) Use

- To display the current zone on AppleTalk network.

7.55 Network Settings-Bonjour Setting

7.55.1 Bonjour Setting

(1) Use

- To use when operating under the Bonjour service environment.

(2) Default setting

- OFF

(3) Setting item

- ON
- “OFF”

7.55.2 Bonjour Name

(1) Use

- To set the name for identifying over the bonjour network.

(2) Procedure

1. Touch [Bonjour Name].
2. Enter the Bonjour name (up to 64 characters) on the on-screen keyboard, and touch [OK].

7.56 Network Settings-TCP Socket Settings

7.56.1 TCP Socket

(1) TCP Socket

(a) Use

- To set whether or not to set the TCP socket.

(b) Default setting

- ON

(c) Setting item

- “ON”
- OFF

(2) Use SSL/TLS

(a) Use

- Select to use SSL communication.

(b) Default setting

- ON

(c) Setting item

- “ON”
- OFF

(3) Port Number

(a) Use

- To set the port number for TCP socket transmission.

(b) Procedure

1. Touch [Input].
2. Touch Clear.
3. Enter the port number between 1 and 65535 using the 10-key pad.

(4) Port Number (SSL/TLS)

(a) Use

- To change the SSL communication port number.

(b) Procedure

1. Touch [Input].
2. Touch Clear.

3. Enter the port number between 1 and 65535 using the 10-key pad.

7.56.2 TCP Socket (ASCII Mode)

(1) TCP Socket/ASCII Mode

(a) Use

- To set whether or not to set the TCP socket for ASCII mode.
- This function is used to use applications that perform TCP socket communications in ASCII mode.

(b) Default setting

- ON

(c) Setting item

- "ON"
- OFF

(2) Port Number (ASCII Mode)

(a) Use

- To set the port number which is used for TCP socket transmission by ASCII mode.

(b) Procedure

1. Touch Clear.
2. Enter the port number between 1 and 65535 using the 10-key pad.

7.57 Network Settings-Network Fax Settings

- It will not be displayed on the screen when all items are set to "OFF" in the following settings.
  [Service Mode] -> [System 2] -> [Network Fax Settings]

7.57.1 Network Fax Function Settings

(1) IP Address Fax Function

- Setting will be available only when [IP Address Fax] is set to "ON" in the following settings.
  [Service Mode] -> [System 2] -> [Network Fax Settings]

(a) Use

- To set whether or not to use IP address fax function.

(b) Default setting

- OFF

(c) Setting item

- ON
- "OFF"

(2) Internet Fax Function

- Setting will be available only when [Internet Fax] is set to "ON" in the following settings.
  [Service Mode] -> [System 2] -> [Network Fax Settings]

(a) Use

- To set whether or not to use Internet fax function.

(b) Default setting

- OFF

(c) Setting item

- ON
- "OFF"

7.57.2 SMTP TX Settings

(1) Use

- To set SMTP TX when network fax function is being used.
- To set SMTP TX port number and connecting time out period when network fax function is being used.

(2) Port No.

(a) Procedure

1. Touch [Input].
2. Enter the port number between 1 and 65535 using the 10-key pad.

(3) Connection Timeout

(a) Procedure

1. Touch [Input].
2. Enter the connection timeout time between 5 and 1000 (sec.) using the 10-key pad.

7.57.3 SMTP RX Settings

(1) Use

- To set SMTP RX when network fax function is being used.
- To set SMTP RX port number and connecting time out period when network fax function is being used.

(2) SMTP RX

(a) Default setting

- ON

(b) Setting item

- "ON"
- OFF

(3) Port No.

(a) Procedure

1. Touch [Input].
2. Enter the port number between 1 and 65535 using the 10-key pad.

(4) Connection Timeout

(a) Procedure

1. Touch [Input].
2. Enter the connection timeout time between 5 and 1000 (sec.) using the 10-key pad.

7.58 Network Settings-WebDAV Settings-WebDAV Client Settings

7.58.1 WebDAV Client Setting

(1) Use

- To set whether to use WebDAV Client Settings.

(2) Default setting

- ON

(3) Setting item

- "ON"
- OFF

7.58.2 Proxy Server Address

(1) Use

- To set the proxy server address.

(2) Procedure

1. Touch [Host Address].
2. Select [Input Host Name], [IPv4 Address Input], or [IPv6 Address Input] and enter a host address.

7.58.3 Proxy Server Port Number

(1) Use

- To set the proxy server port number.

(2) Procedure

1. Touch Clear.
2. Enter the proxy server port number between 1 and 65535 using the 10-key pad.

7.58.4 User Name

(1) Use

- To set the user name for WebDAV authentication.

(2) Procedure

1. Touch [User Name].
2. Enter the user name on the on-screen keyboard, and touch [OK].

7.58.5 Password

(1) Use

- To set the password for WebDAV authentication.

(2) Procedure

1. Touch [Password].
2. Enter the password on the on-screen keyboard, and touch [OK].

7.58.6 Chunk Transmission

(1) Use

- To set whether to transmit data by dividing it into some chunks.

(2) Default setting

- No

(3) Setting item

- Yes
- “No”

7.58.7 Connection Timeout

(1) Use

- To set the timeout period for connecting to WebDAV server.

(2) Procedure

1. Touch Clear.
2. Enter the connecting timeout period between 5 and 300 using the 10-key pad.

7.58.8 Server Auth. Character Code

(1) Use

- To set a character code used during WebDAV server authentication.

(2) Default setting

- UTF-8

(3) Setting item

- “UTF-8”
- Windows Code page

7.58.9 Certificate Verification Level Settings

(1) Use

- To verify the server certificate, configure settings to verify the certificate.

(2) Procedure

Expiration Date	Select whether to check that the server certificate is within the validity period.
Key Usage	Select whether to check that the server certificate is used according to the purpose approved by the issuer.
Chain	• Select whether to check that the server certificate chain (certification path) is correct. • The chain is validated by referencing the external certificates managed on this machine.
Expiration Date Confirmation	• Select whether to check that the server certificate is within the validity period. • The OCSP service and CRL (Certificate Revocation List) are checked in this order when the expiration date of the certificate is checked.
CN	Select whether to check that the CN of the server certificate matches the server address.

7.59 Network Settings-WebDAV Settings-WebDAV Server Settings

7.59.1 WebDAV Server Settings

(1) Use

- To set whether to use WebDAV Server Settings.
- Using this machine as a WebDAV server allows you to associate this machine with an application that operates as a WebDAV client.

(2) Default setting

- ON

(3) Setting item

- “ON”

- OFF

7.59.2 SSL Setting

- It is displayed only when SSL Certificate is registered.

(1) Use

- To set whether to use SSL/TLS for communications when using the machine as WebDAV server.

(2) Default setting

- Non-SSL Only

(3) Setting item

- "Non-SSL Only"
- SSL Only
- SSL/Non-SSL

NOTE

- **If [Administrator Settings] -> [Security Settings] -> [Enhanced Security Mode] is set to "ON", selecting other than "SSL Only" in this setting cancels enhanced security mode.**

7.59.3 Password Setting

(1) Use

- To set a password to access WebDAV server.

(2) Procedure

1. Touch [Password Setting].
2. Enter a password with the keyboard on the screen, and touch [OK].

NOTE

- **Touching [Initial Password] can restore the default password setting.**
  (Default password: sysadm)

7.60 Network Settings-WebDAV Settings-Proxy Setting for Remote Access

7.60.1 Proxy Setting for Remote Access

(1) Use

- To configure the settings of the proxy server used for CS Remote Care. When selecting [ON], the settings below are available.
- To configure the settings when a proxy server is used in http connection in CS Remote Care.
- To configure the settings of the proxy server used when MFP accesses to KM license server via WebDAV connection from [Administrator Settings] -> [License Settings] -> [Install License] (WebDAV connection) or [Service Mode] -> [Billing Setting] to activate i-Option function.

WebDAV Client Settings and Synchronization	Select whether to use the proxy server used for WebDAV transmission as a proxy server for remote diagnosis.
Individual Settings	To use a different proxy server for remote diagnosis, enter the proxy server information.

(2) Default setting

- OFF

(3) Setting item

- ON
- "OFF"

7.61 Network Settings-DPWS Settings-DPWS Common Settings

7.61.1 Friendly Name

(1) Use

- To define a friendly name that is used when printing a job with WSD (Web Service on Devices) function.

(2) Procedure

1. Touch [Friendly Name].
2. Enter the friendly name (up to 62 characters) on the on-screen keyboard, and touch [Close].

7.61.2 Publication Service

(1) Use

- To set whether or not to enable Publication Service.
- Select [Enable] when using this machine under an environment where communication is possible only with Windows Vista's IPv6.

(2) Default setting

- Invalid

(3) Setting item

- Enable
- “Invalid”

7.61.3 Enable SSL

- It will be displayed only when SSL Certificate is registered.

(1) Use

- To set whether to use SSL when using WSD (Web Service on Devices) function.

(2) Default setting

- OFF

(3) Setting item

- ON
- “OFF”

7.61.4 Certificate Verification Level Settings

- It will be displayed only when SSL Certificate is registered.

(1) Use

- To verify the server certificate, configure settings to verify the certificate.

(2) Procedure

Expiration Date	Select whether to check that the server certificate is within the validity period.
Key Usage	Select whether to check that the server certificate is used according to the purpose approved by the issuer.
Chain	• Select whether to check that the server certificate chain (certification path) is correct. • The chain is validated by referencing the external certificates managed on this machine.
Expiration Date Confirmation	• Select whether to check that the server certificate is within the validity period. • The OCSP service and CRL (Certificate Revocation List) are checked in this order when the expiration date of the certificate is checked.

7.62 Network Settings-DPWS Settings-DPWS Extension Settings

DPWS Extension Settings

- This function allows you to configure the settings that enable the MFP to be used as a scanner via the discovery proxy defined by WS-Discovery under the condition where multicast communication is restricted.

7.62.1 Enable Proxy

(1) Use

- To set whether to use the discovery proxy.

(2) Default setting

- OFF

(3) Setting item

- ON
- “OFF”

7.62.2 Register Proxy

- To set the discovery proxy server used on this machine.

(1) Register Proxy-Host Name

(a) Use

- Enter the discovery proxy server address. Select [Input Host Name], [IPv4 Address Input], or [IPv6 Address Input] and enter a host address.

(2) Register Proxy-File Path

(a) Use

- Enter the service name at the path part of the URL where the WS-Discovery service is published in the discovery proxy server (using up to 255 characters).

(3) Register Proxy-SSL Setting

(a) Use

- To set whether to use SSL to encrypt a communication with the discovery proxy server, select [ON].

(b) Default setting

- OFF

(c) Setting item

- ON
- “OFF”

(4) Register Proxy-Port Number

(a) Use

- To set the port number of the discovery proxy server.

(b) Procedure

- Touch Clear.
- Enter the port number between 1 and 65535 using the 10-key pad.

7.63 Network Settings-DPWS Settings-Printer Settings

7.63.1 Printer Settings

(1) Use

- To set whether to use this printer as a WSD printer.

(2) Default setting

- OFF

(3) Setting item

- ON
- “OFF”

7.63.2 Printer Name

(1) Use

- To set the WS printer name.

(2) Procedure

1. Touch [Printer Name].
2. Enter the friendly name (up to 63 characters) on the on-screen keyboard, and touch [Close].

7.63.3 Printer Location

(1) Use

- To set the WS printer location.

(2) Procedure

1. Touch [Printer Location].
2. Enter the friendly name (up to 63 characters) on the on-screen keyboard, and touch [Close].

7.63.4 Printer Information

(1) Use

- To set the WS printer information.

(2) Procedure

1. Touch [Printer Information].
2. Enter the friendly name (up to 63 characters) on the on-screen keyboard, and touch [Close].

7.64 Network Settings-DPWS Settings-Scanner Settings

7.64.1 Scanner Settings

(1) Use

- To set whether to use this machine as a WSD scanner.

(2) Default setting

- OFF

(3) Setting item

- ON
- “OFF”

7.64.2 Scanner Name

(1) Use

- To set the WS scanner name.

(2) Procedure

1. Touch [Scanner Name].
2. Enter the friendly name (up to 63 characters) on the on-screen keyboard, and touch [Close].

7.64.3 Scanner Location

(1) Use

- To set the WS scanner location.

(2) Procedure

1. Touch [Scanner Location].
2. Enter the friendly name (up to 63 characters) on the on-screen keyboard, and touch [Close].

7.64.4 Scanner Information

(1) Use

- To set the WS scanner information.

(2) Procedure

1. Touch [Scanner Information].
2. Enter the friendly name (up to 63 characters) on the on-screen keyboard, and touch [Close].

7.64.5 Connection Timeout

(1) Use

- To set the timeout period for connection of WS scanner.

(2) Procedure

1. Touch Clear.
2. Enter the connecting timeout period between 30 and 300 using the 10-key pad.

7.65 Network Settings-Distributed Scan Settings

7.65.1 Distributed Scan Settings

(1) Use

- Used to use scan server service provided by the server under the environment where Windows Server 2008 R2 is a predominant system that includes Active Directory.
- MFP can be integrated into the system where distributed scan management is used.

(2) Default setting

- OFF

(3) Setting item

- ON
- “OFF”
- The following settings are necessary for setting the [ON].
  - It will be displayed when the following setting is set to “ON.”
    [Administrator Settings] -> [Network Settings] -> [DPWS Settings] -> [Scanner Settings]
  - It will be displayed when the following setting is set to “ON.”
    [Administrator Settings] -> [Network Settings] -> [DPWS Settings] -> [DPWS Common Settings] -> [Enable SSL]

7.66 Network Settings-ThinPrint Setting

7.66.1 ThinPrint Setting

- This is displayed only when the optional i-Option LK-111 has been activated.

(1) Use

- To set whether to use the ThinPrint function.
- To shorten the printing time by performing data compression or broadband control when sending a print data to this machine.

(2) Default setting

- ON

(3) Setting item

- "ON"
- OFF

7.66.2 Port Number

(1) Use

- To enter the port number of ThinPrint Engine (.print Engine) to be connected.

(2) Procedure

1. Touch Clear.
2. Enter the port number between 1 and 65535 using the 10-key pad.

7.66.3 Data Size before Compression

(1) Use

- To specify the maximum packet size to compress data in the ThinPrint Engine (.print Engine) side.
  ThinPrint Engine (.print Engine) compresses data in these sizes before sending a print job to this machine.

(2) Procedure

1. Touch Clear.
2. Enter the number using the keypad.

7.66.4 Connection Timeout

(1) Use

- To enter the connection timeout period to send a print job from ThinPrint Engine (.print Engine).

(2) Procedure

1. Touch Clear.
2. Enter the number using the 10-key pad.

7.66.5 Printer Name/Printer Class Name

(1) Use

- Enter the printer name and the printer class name of this machine to be used in ThinPrint Engine (.print Engine).

7.66.6 Certificate Verification Level Settings

(1) Use

- To verify the certificate verification level.

(2) Procedure

Expiration Date	Select whether to check that the server certificate is within the validity period.
Key Usage	Select whether to check that the server certificate is used according to the purpose approved by the issuer.
Chain	Select whether to check that the server certificate chain (certification path) is correct.
Expiration Date Confirmation	Select whether to check that the server certificate is within the validity period. The OCSP service and CRL (Certificate Revocation List) are checked in this order when the expiration date of the certificate is checked.
CN	Select whether to check that the CN of the server certificate matches the server address.

7.66.7 Connection Service Setting

(1) Use

- To select whether to use Connection Service. [OFF] is specified by default.

(2) Default setting

- OFF

(3) Setting item

- ON
- "OFF"
- Configure the following settings when [ON] is selected.

<Server Address>
- Enter the address of the server that supplies Connection Service.

<Port Number>
- Enter the number of the port that is used for Connection Service.

<AYT Interval>
- Enter the reconnection interval to check Connection Service operations in seconds.

<Client ID>
- Enter the client ID of this machine to be used for Connection Service.

<Authentication Key>
- Enter the authentication key used to connect to Connection Service.

7.66.8 Checking Connection Service Setting

(1) Use

- To display the status of the connection with Connection Service.

7.67 Network Settings-Detail Settings-Device Setting

7.67.1 MAC Address

(1) Use

- To display the MAC address of the machine.

(2) Procedure

- The address cannot be changed.

7.67.2 Network Speed

(1) Use

- To set the network speed.

(2) Default setting

- Auto (10M/100Mbps)

(3) Setting item

- “Auto (10M/100Mbps)”
- Auto (10M/100Mbps/1Gbps)
- 10Mbps Full Duplex
- 10Mbps Half Duplex
- 100Mbps Full Duplex
- 100Mbps Half Duplex
- 1Gbps Full Duplex

7.67.3 LLTD Setting

(1) Use

- To set whether or not to enable LLTD (Link Layer Topology Discovery).
- By enabling LLTD, Windows Vista's Network Map can show this machine's location on the network.

(2) Default setting

- Enable

(3) Setting item

- “Enable”
- Disable

7.68 Network Settings-Detail Settings-Time Adjustment Setting

7.68.1 Time Adjustment Setting

(1) Use

- To set whether to enable or disable the NTP setting.
- To synchronize the time between the server and the client.

(2) Default setting

- OFF

(3) Setting item

- ON
- “OFF”

7.68.2 Auto IPv6 Retrieval

(1) Use

- To set whether or not to automatically obtain NTP server's IPv6 address.

(2) Default setting

- On

(3) Setting item

- “On”

- Off

7.68.3 NTP Server Setting

(1) Host Address

(a) Use

- To set the NTP server address.

(b) Procedure

1. Touch [Host Address].
2. Select [Input Host Name], [IPv4 Address Input], or [IPv6 Address Input] and enter a host address.

(2) Port Number

(a) Procedure

1. Touch Clear.
2. Enter the port number between 1 and 65535 using the 10-key pad.

7.68.4 Auto Time Adjustment

(1) Use

- To set whether or not to automatically adjust time.

(2) Default setting

- Off

(3) Setting item

- On
- “Off”

7.68.5 Polling Interval

(1) Use

- To set a polling interval when Auto Time Adjustment is set to ON.

(2) Procedure

1. Touch Clear.
2. Enter a polling interval within the range between 1 to 240 hours with the 10-key pad.

7.69 Network Settings-Detail Settings-Status Notification Setting

- It will not be displayed when the following setting shows that authentication device 2 is mounted.
  [Service Mode] -> [Billing Setting] -> [Management Function Choice]
- To notify status, notifications both by E-mail and by SNMP TRAP function can be set. For E-mail, up to ten IP addresses and one IPX address can be set. For SNMP TRAP function, up to five IP addresses and one IPX can be set.

7.69.1 Register Notification Address (IP Address)

(1) Use

- To set IP addresses to which machine status notifications are sent.
- Up to 5 addresses can be registered.

(2) Procedure

1. From IP address 1 to 5, select an IP address where settings are made.
2. Touch [Host Address].
3. Select [Input Host], [IPv4 Address Input] or [IPv6 Address Input] and enter a host address.
4. Touch Clear and enter a port number within the range of 1 to 65535 using the 10-key pad.
5. Touch [Community Name] and enter a community name.
6. Touch [Notification Items] and set the items to be notified to [ON].
7. Touch [OK] and finish the settings.

7.69.2 Register Notification Address (IPX Address)

(1) Use

- To set IPX addresses to which machine status notifications are sent.

(2) Procedure

1. Touch [IPX Address].
2. Touch [Network Address] or [Node Address] and enter an address.
3. Touch [Community Name] and enter a community name.
4. Touch [Notification Items] and set the items to be notified to [ON].
5. Touch [OK] and finish the settings.

7.69.3 Register Notification Address (E-mail Address)

(1) Use

- To set E-mail addresses to which machine status notifications are sent.
- Up to 10 addresses can be registered.

(2) Procedure

1. Touch [Forward].
2. From E-mail addresses 1 to 10, select an E-mail address where settings are made.
3. Touch [Edit E-Mail Address].
4. Enter an E-mail address (up to 320 one-byte characters) using the keyboard on the screen and touch [OK].
5. Touch [Notification Items] and set the items to be notified to [ON].
6. Touch [OK] and finish the settings.

7.70 Network Settings-Detail Settings-Total Counter Notification Settings

7.70.1 Notification Schedule Setting

(1) Use

- To set the schedule for informing the total counter value.
- Two different schedules can be set for reporting.

(2) Procedure

1. Touch [Schedule 1] or [Schedule 2].
2. Select the reporting cycle from [Daily], [Weekly] or [Monthly].
3. When selecting [Daily] for the reporting cycle, set the Interval of day(s).
4. When selecting [Weekly] for the reporting cycle, set the Interval of week(s) and day of the Week.
5. When selecting [Monthly] for the reporting cycle, set the Interval of month(s) and date of the month.

7.70.2 Notification Address Setting

(1) Use

- To set the e-mail address for reporting the total counter value.
- Up to three e-mail addresses can be set.
- It can be selected whether to apply the schedule of the [Set Schedule] to each address.

(2) Procedure

1. Touch [Address 1], [Address 2] or [Address 3].
2. Touch [Edit E-Mail Address].
3. Enter the e-mail address (up to 320 one-byte characters) on the on-screen keyboard, and touch [OK].
4. Select whether to notify or ignore Eco-related information.
5. Touch [Schedule Settings].
6. Select ON/OFF for each schedule.

7.70.3 Model Name

(1) Use

- To set the device name for identifying the copier when reporting the total counter.

(2) Procedure

1. Touch [Model Name].
2. Enter the model name (up to 20 one-byte characters) on the on-screen keyboard, and touch [OK].

7.70.4 Send Now

(1) Use

- To transfer the current total counter value to the set address.

7.71 Network Settings-Detail Settings-PING Confirmation

7.71.1 Use

- To set the TCP/IP network diagnosis by PING.

7.71.2 Procedure

1. Touch [Host Address] for PING transmission.
2. Select [Input Host Name], [IPv4 Address Input], or [IPv6 Address Input] and enter a host address.
3. Touch [Check Connection] key to check the connection.

7.72 Network Settings-Detail Settings-SLP Setting

7.72.1 Use

- To set whether to use SLP or not.

7.72.2 Default setting

- Enable

7.72.3 Setting item

- "Enable"
- Disable

7.73 Network Settings-Detail Settings-LPD Setting

7.73.1 Use

- To set whether to use LPD during printing or not.

7.73.2 Default setting

- Enable

7.73.3 Setting item

- "Enable"
- Disable

7.74 Network Settings-Detail Settings-Prefix/Suffix Setting

7.74.1 ON/OFF Setting

(1) Use

- To set whether to add prefix or suffix to the address when calling or entering an address.

(2) Default setting

- OFF

(3) Setting item

- ON
- "OFF"

7.74.2 Prefix/Suffix Setting

(1) Use

- To register or change the prefix or suffix.
- Eight types of prefix and suffix can be added.

Prefix	Letters added to the top of the text (header part)
Suffix	Letters added to the bottom of the text (footer part)

(2) Procedure

- Available number to be registered as prefix is up to 20 characters.
- Available number to be registered as suffix is up to 64 characters.

7.75 Network Settings-Detail Settings-Error Code Display Setting

7.75.1 Use

- To set whether or not to display an error code when a network-related error occurs.
- To help to identify the cause of network error by displaying an error code.

7.75.2 Default setting

- OFF

7.75.3 Setting item

- ON
- "OFF"

7.76 Network Settings-IEEE802.1X Authentication Settings

NOTE

- **IEEE802.1X authentication settings are made with PageScope Web Connection.**

7.76.1 IEEE802.1X Authentication Settings

(1) Use

- To set whether or not to use IEEE802.1X authentication.

(2) Default setting

- OFF

(3) Setting item

- ON
- “OFF”

7.76.2 Auth. Status

(1) Use

- Displays present IEEE802.1X authentication status.

7.76.3 Reset Job Settings

(1) Use

- Returns all IEEE802.1X authentication settings to initial values.

7.76.4 Certificate Verification Level Settings

(1) Procedure

- Sets a certificate verification method for server certificate verification.

Expiration Date	Select whether to check that the server certificate is within the validity period.
CN	Select whether to check that the CN of the server certificate matches the server address.
Chain	• Select whether to check that the server certificate chain (certification path) is correct. • The chain is validated by referencing the external certificates managed on this machine.

7.77 Network Settings-Web Browser Setting

- This is displayed only when the optional i-Option LK-101 v3 and upgrade kit UK-204 are enabled.

7.77.1 Use

- To set whether to use the web browser function.

7.77.2 Default setting

- Enable

7.77.3 Setting item

- “Enable”
- Invalid

7.78 Network Settings-Bluetooth Setting

- It will be displayed only when the following setting is set to “Invalid.”
  [Service Mode] -> [System 2] -> [Bluetooth Settings]

7.78.1 Use

- To set whether to enable or disable the Bluetooth function.

7.78.2 Default setting

- Enable

7.78.3 Setting item

- “Enable”
- Invalid

7.79 Network Settings-Single Sign-On Setting

Single Sign-On Setting

- Under the environment of authentication by Active Directory, single sign-on authentication can be enabled.
- When [Administrator Settings] -> [User Authentication/Account Track] -> [General Settings] -> [User Authentication] is set to [External Server Authentication] or [Main + External Server], this function is available.

7.79.1 Domain Login Setting

(1) Use

- To set whether to use the single sign-on function or not.
- To configure the settings on the Active Directory domain that allows single sign-on login.

(2) Default setting

- OFF

(3) Setting item

- ON
- “OFF”

(4) Procedure

- When selecting [ON], configure the following settings.

<Host Name>

- Enter the host name of this machine (using up to 253 characters, including only - and . for symbol marks).
  Enter the DNS host name specified in [Administrator Settings] -> [Network Settings] -> [TCP/IP Settings] -> [DNS Host].

<Domain Name>

- Enter the domain name of Active Directory (using up to 64 characters).

<Account Name>

- Enter the account name that has a privilege to participate users in the Active Directory domain (using up to 64 characters).

<Password>

- Enter the password of the account that has a privilege to participate users in the Active Directory domain (using up to 64 characters, excluding spaces and ”).

<TX Timeout>

- To set the time-out time (30 Second is specified by default).

7.79.2 Applications and Settings

(1) Use

- To check the list of the MFP services available in the registered Active Directory domain.

7.79.3 Auto Log Out Time

(1) Use

- To set the time period during which single sign-on authentication information is kept.

(2) Default setting

- 1 Hour

(3) Setting item

- 15 Minutes
- 30 Minutes
- “1 Hour”
- 5 Hours
- 10 Hours
- 24 Hours

7.80 Network Settings-Extended Network Settings

7.80.1 Extended Network Settings

- It is displayed when this machine is equipped with an optional Upgrade Kit UK-208.
- An optional Upgrade Kit UK-209 is required to connect this machine to an Android tablet terminal. However, when the dual scan document feeder DF-701 is installed, no installation of the upgrade kit UK-209 is required.

(1) Use

- To configure the setting to return the machine from the ErP Auto Power Off mode via the wireless network when the machine is connected to an Android tablet terminal.

7.80.2 Operating Mode

(1) Use

- To set whether to return the machine from the ErP Auto Power Off mode via the wireless network.

(2) Default setting

- OFF

(3) Setting item

- “OFF”
- Awake from ErP Only

7.80.3 Awake from ErP

(1) Use

- To select the method to return the machine from the ErP Auto Power Off mode.

Awake with Magic Packet	The machine returns from the ErP Auto Power Off mode when receiving a magic packet.
Awake with ARP + Unicast Communication	The machine returns from the ErP Auto Power Off mode when receiving a unicast communication packet.

(2) Default setting

- Awake with Magic Packet

(3) Setting item

- “Awake with Magic Packet”

- Awake with ARP + Unicast Communication

7.80.4 Wireless LAN Adapter

(1) Use

- To configure the setting to operate the machine as a wireless LAN adapter.

(2) Procedure

SSID	Enter the SSID of the wireless LAN access point connected to the machine (using up to 32 characters).
40 to 20 MHz Auto Switch	Select [ON] to try a high-speed communication with 40MHz. [OFF] is specified by default.
Authentication/Encryption Algorithm	Select the algorithm used for authentication or encryption. • If [WEP] is selected, specify [Key Input Method] and [WEP Key]. To specify multiple WEP keys, select the required WEP keys in [Use key settings]. • If an algorithm other than WEP is selected, specify [Key Input Method] and [Passphrase]

7.80.5 Device Setting

(1) Use

- To display the MAC address of the wireless network adapter.

7.81 Network Settings-IWS Settings

7.81.1 IWS Settings

NOTE

- **It will be displayed when the following setting is set to "Invalid."**
  [Administrator Settings] -> [Security Settings] -> [FIPS Settings]

(1) Use

- To configure the settings of the WebDAV server which is used to transfer data in the IWS (Internal Web Server) function.

(2) Default setting

- OFF

(3) Setting item

- ON
- "OFF"

(4) Procedure

- When selecting [ON], configure the following settings.

1. Set the port number in [Port Number] (Web server/Application Installation) using the 10-key pad.
2. Set Allow/Restrict for the connection of application in [Connected IWS Apps to Network].

- The following settings are available when the IWS application has been registered.

<Print Data Conversion Setting>
- Select a print data conversion application.

<Authentication Screen Setting>
- Select an authentication screen application.

<Background Application Setting>
- Select a background application.

<Application List>
- Display the list of the registered applications (up to 50 applications)

7.82 Network Settings-Remote Panel Settings

Remote Panel Settings

- It will not be displayed when [CE Authentication] is set to "OFF" in the following settings.
  [Service Mode] -> [Enhanced Security]
- Issue and install the self-signed certificate from Device Certificate Setting under Security Setting of PageScope Web Connection.
- Enable CE Password.
- The control panel of this machine can be operated remotely from a computer on the network.
- The following two methods are available for operating the control panel.

Using the dedicated software	This method uses the dedicated software that collects screen information of the control panel of this machine periodically, and operates the control panel from a computer on the network. You must prepare a dedicated remote control software program and server. Despite the burden, this method enables you to control the machine remotely even from a computer located outside the router network.
Accessing the machine directly	This method accesses this machine directly from another computer on the network, and operates the control panel of the machine using a Web browser. A dedicated remote control software program is not required, but the computer used for the remote control must be able to access this machine.

- During remote operations, display on the control panel can be masked to thereby lock the operation on the MFP side (the MFP control panel is forced into the locked state when the machine is set into the service mode through remote operation).

- The control panel can also be unlocked through remote operation. The MFP control panel is enabled when unlocked remotely.
- Operations performed through the MFP control panel while it is in the unlocked state can be reflected in the remote panel side.
- The remote operations are disabled under the following conditions:
  - Service mode operations are being performed on the MFP.
  - Remote operations are already performed from another PC.

7.82.1 Server Settings

(1) Use

- To access this machine directly and control the control panel of the machine remotely, select [ON].

(2) Default setting

- OFF

(3) Setting item

- ON
- “OFF”

(4) Procedure

- When selecting [ON], configure the following settings.

<Server Settings - Password Authentication>

- Select whether to request password entry for connecting with this machine. To request for a password entry, select [Yes], and enter the password (using up to 64 characters).

<Server Settings - IP Filtering (Permit Access)>

- Select [Enable] to specify IP addresses allowed to access. Also enter the range of IP addresses allowed to access.

<Port Number>

- To set the port number.

<Connection Timeout>

- To set the time-out time (60 Second is specified by default).

Starting the remote operations

Access the MFP web server (URL: https://IP_address_of_MFP:Port_Number/panel/top.html) through the web browser.

- If Password Authentication is set, enter the set password.
- If IP Filtering is enabled, connection can be established only through the authorized address.

7.82.2 Client Settings

(1) Use

- To control the control panel of this machine remotely using the dedicated software, select [ON].

(2) Default setting

- OFF

(3) Setting item

- ON
- “OFF”

(4) Procedure

- When selecting [ON], configure the following settings.

<Port No.>

- To set the port number.

<Connection Timeout>

- To set the time-out time (60 Second is specified by default).

<Server Address>

- Enter the address of the server where the dedicated software was installed.

<Certificate Verification Level Settings>

- To verify the server certificate, configure settings to verify the certificate.

Expiration Date	Select whether to check that the server certificate is within the validity period.
Key Usage	Select whether to check that the server certificate is used according to the purpose approved by the issuer.
Chain	Select whether to check that the server certificate chain (certification path) is correct.
Expiration Date Confirmation	Select whether to check that the server certificate is within the validity period. The OCSP service and CRL (Certificate Revocation List) are checked in this order when the expiration date of the certificate is checked.
CN	Select whether to check that the CN of the server certificate matches the server address.

<Synchronize WebDAV Client Setting>

- Select whether to use the proxy server for WebDAV transmission as a proxy server for the server where the dedicated software was installed.
- To use a different proxy server, select [Individual Settings] and enter the proxy server information.

7.83 Network Settings-Machine Update Settings

7.83.1 Internet ISW Settings

- This is displayed when [Function Setting] is set to [Set] in [Service Mode] -> [Machine Update Setting] -> [Internet ISW] -> [Internet ISW Set].

(1) Update Firmware at Specified Time

- This is displayed when [Open Mode Settings] is set to [Set] in [Service Mode] -> [Machine Update Setting] -> [Internet ISW] -> [Internet ISW Set].

(a) Use

- To update the downloaded firmware at the specified time.

(b) Default setting

- No

(c) Setting item

- Yes
- "No"
- If [Yes] is selected, set the time to update the firmware.

(2) FTP Server Settings

- This is displayed when [FTP data acquisition setting] is set to [ON] in [Service Mode] -> [Machine Update Setting] -> [Internet ISW] -> [FTP Setting].

(a) Use

- To set whether to connect via a proxy server to access the FTP server.
- To configure the settings related to the server for connection via a proxy server.

(b) Default setting

- OFF

(c) Setting item

- ON
- "OFF"

(d) Produce

- If [ON] is selected, configure the following settings.

1. Touch [Host Address] in [Proxy Server Address] to set the host address of the proxy server.
2. Set the port number used to access the proxy server in [Proxy Server Port Number].

(3) Firmware Update Parameters

- This is displayed when [Open Mode Settings] is set to [Set] in [Service Mode] -> [Machine Update Setting] -> [Internet ISW] -> [Internet ISW Set].

(a) Use

- To download and update the firmware.
- When you wish to update the firmware at the specified time, after downloading it in the way described here, you can specify the time in [Update Firmware at Specified Time].

(b) Procedure

1. Touch [Download] in [Administrator Settings] -> [Network Settings] -> [Machine Update Settings] -> [Internet ISW Settings] -> [Firmware Update Parameters].
2. Select [Yes] in the confirmation screen and touch [OK].
3. The firmware download starts.
4. The message to show the status will be displayed on the screen while connecting and transferring data.
5. Select [Upgrade] or [Delete].
   - Touching [Upgrade] starts updating using the downloaded firmware data. Select [Yes] in the confirmation screen and touch [OK].
   - Touching [Delete] will delete the downloaded firmware data. Select [Yes] in the confirmation screen and touch [OK].
6. When the firmware is normally upgraded, the main body will automatically be restarted to complete the Internet ISW.

NOTE

- **To download the firmware, in addition to the necessary proxy settings configured in [FTP Server Settings], you need to configure appropriate settings in [Service Mode] -> [Machine Update Setting] ->[Internet ISW] -> [HTTP Setting], [FTP Setting], and [Forwarding Access Setting].**

7.83.2 Machine Auto Update setting

- Obtain the update file for this machine from the file storage server to update the firmware or settings of the machine.
- This function is same as that of the service mode, but it will not be used together with the function of the service mode.
- Refer to J-4 for how to create an update file.

(1) Auto Update Settings for This Machine

(a) Use

- To obtain the update file from the specified location, and configure settings to update the machine at the specified time.

(b) Default setting

- OFF

(c) Setting item

- ON
- "OFF"

(d) Procedure

- If [ON] is selected, configure the following settings.

When configuring the settings for SMB with the download protocol *1
<Host Name>
- Set the host name of the SMB server.

<File Path>
- Set the file path used in the SMB server communication. *2

<User Name>
- Set the user name used to access the SMB server.

<Password>
- Set the password used to access the SMB server.

<Number of retries>
- Set the number of times to retry when failed to obtain.

<Update Time>
- Touch Clear to set the time to update the machine.

<Polling Interval>
- Set the polling period for obtaining the update list.

<Retry Interval>
- Set the period for retrying when failed to obtain.

*1: If the MFP relay server is used as a server on the data providing side, the SMB protocol will not be used.
*2: Specify the folder in which C_UpdateList.ini is stored. Refer to J-4 for details.

When configuring the settings for HTTP with the download protocol
<URL>
- Set the address of the http server. *1

<User Name>
- Set the user name used to access the http server.

<Password>
- Set the password used to access the http server.

<Proxy>
- Select whether to use the proxy server. *2

<Connection Timeout>
- Set the timeout period for connecting to the server.

<Update Time>
- Touch Clear to set the time to update the machine.

<Polling Interval>
- Set the polling period for obtaining the update list.

<Retry Interval>
- Set the period for retrying when failed to obtain.

*1: Specify the folder in which C_UpdateList.ini is stored. Refer to J-4 for details.
*2: If [ON] is selected, set the proxy with [Administrator Settings] -> [Network Settings] -> [Machine Update Settings] -> [HTTP Proxy Settings].

(2) Relay Server Function Setting

- Obtain an update relay data, and configure settings for the relay server function which enables the file to be shared with the other MFP.

(a) Update File Download

- Set a relay server to obtain the update relay data from file storage server.
- When [ON] is selected, configure the following settings. [OFF] is default.

<URL>
- Set the address of the file storage server. *1

<User Name>
- Set the user name used to access the file storage server.

<Password>
- Set the password used to access the file storage server.

<Proxy>
- Select whether to use the proxy server. *2

<Polling Interval>
- Set the polling period for obtaining the update list.

<Retry Interval>
- Set the period for retrying when failed to obtain.

<Connection Timeout>
- Set the timeout period for connecting to the server.

*1: Specify the folder in which S_UpdateList.csv is stored. Refer to J-5 for details.

*2: If [ON] is selected, set the proxy with [Administrator Settings] -> [Network Settings] -> [Machine Update Settings] -> [HTTP Proxy Settings].

(b) Authentication Setting

- Configure the authentication settings of access management works as an update relay data sharing server.
- When [ON] is selected, configure the following settings. [OFF] is default.

DO NOT use the SMB setting
For HTTP Setting
<User Name>
- Set the user name used to access the relay server by http protocol.

<Password>
- Set the password used to access the relay server.

NOTE
- **Once a password is set, be sure not to forget it. It is required for reset.**
- **Please refer to J.5.3.3 Download the firmware opened from the relay server by using the Auto Update function on the other MFP. for the file path of relayed data.**

(3) Log TX setting

(a) Update File Download/Update Log

- Save the update file download log for auto update of the machine, and send it to the specified location.
- When [ON] is selected, configure the settings for transmission protocol. [OFF] is default.

For PC (SMB)
<Host Name>
- Set the host name of the SMB server.

<File Path>
- Set the file path used for SMB server communication.

<User Name>
- Set the user name used to access the SMB server.

<Password>
- Set the password used to access the SMB server.

For WebDAV
<URL>
- Set the address of the WebDAV server.

<User Name>
- Set the user name used to access the WebDAV server.

<Password>
- Set the password used to access the WebDAV server.

<Proxy>
- Select whether to use the proxy server. *1

*1: If [ON] is selected, set the proxy with [Administrator Settings] -> [Network Settings] -> [Machine Update Settings] -> [HTTP Proxy Settings].

(b) Relay Update File Download Log

- Save the log related to update relay data download for the relay server, and send it to the specified location.
- When [ON] is selected, configure the settings for transmission protocol. [OFF] is default.

For PC (SMB)
<Host Name>
- Set the host name of the SMB server.

<File Path>
- Set the file path used for SMB server communication.

<User Name>
- Set the user name used to access the SMB server.

<Password>
- Set the password used to access the SMB server.

For WebDAV
<URL>
- Set the address of the WebDAV server.

<User Name>
- Set the user name used to access the WebDAV server.

<Password>
- Set the password used to access the WebDAV server.

<Proxy>
- Select whether to use the proxy server. *1

*1: If [ON] is selected, set the proxy with [Administrator Settings] -> [Network Settings] -> [Machine Update Settings] -> [HTTP Proxy Settings].

(4) Log Confirmation

- Check the log related to update file download for auto update of the machine or update relay data download for relay server.
- The latest five logs can be checked.

(5) Immediate Update

- This is displayed when [Auto Update Settings for This Machine] is set to [ON] in, [Administrator Settings] -> [Network Settings] -> [Machine Update Settings] with the following condition.

- This is displayed when the update file for auto update settings has been downloaded in HDD.

(a) Use

- To conduct Machine Auto Update manually.

(b) Procedure

1. Touch [Immediate Update] to start update.
2. Touch [Yes] on the confirmation screen, and touch [OK].

NOTE

Do not set the power to OFF under the following state.

- **It takes about 45 seconds from touching [Immediate Update] -> [Start] to the next operation of the MFP (Auto Power OFF).**
- **About one minute after the download completed screen being displayed, the MFP will restart.**
- **When rewriting configuration files followed by the firmware, the MFP will restart again.**

(6) Machine Update Password

(a) Use

- To set a password used to decrypt the configuration file(s) of the machine.

(b) Procedure

- Enter the decryption password using the on-screen keyboard.

1. Current Password: Enter the currently used decryption password (only when the decryption password has been set).
2. Password: Enter the new decryption password.
3. Password Confirmation: Enter the new decryption password again.

NOTE

- **Once a password is set, be sure not to forget it. It is required for reset.**
- **Please refer to J-4 for how to make the configuration file(s).**

7.83.3 HTTP Proxy Settings

(1) Use

- To select whether to connect via a proxy server to access the http server.
- To configure the settings of the server related to connection via a proxy server

(2) Default setting

- OFF

(3) Setting item

- ON
- “OFF”

(4) Produce

- If [ON] is selected, configure the following settings.

1. Touch [Host Address] in [Proxy Server Address] to set the host address of the proxy server.
2. Set the port number used to access the proxy server in [Proxy Server Port Number].
3. Select whether to perform an authentication to access a proxy server. If [ON] is set, enter the user name and password.

7.84 Network Settings-Tablet Settings

- An optional Upgrade Kit UK-209 is required to connect this machine to an Android tablet terminal. However, when the dual scan document feeder DF-701 is installed, no installation of the upgrade kit UK-209 is required.

7.84.1 Use

- To connect the machine to an Android tablet terminal, then configure a communication setting to transfer image data or operation contents of the control panel.

Connection Method	Compresses image data of the Control Panel of this machine before sending it to a tablet terminal. Select whether to give priority to the operation speed at a tablet terminal or give priority to the image quality of the tablet terminal screen.
Connection Timeout	If necessary, change the timeout period to close a communication with a tablet terminal.

7.84.2 Default setting

- Connection Method: Standard
- Connection Timeout: 20 min.

7.84.3 Setting item

- Connection Method: Prioritize Speed, "Standard", Prioritize Quality
- Connection Timeout: 1 min. to 240 min.

7.85 Copier Settings

7.85.1 Auto Zoom (Platen)

(1) Use

- To set whether to function the auto zoom when the tray is selected with document set on the original glass (excepting at automatic paper selection mode.)

(2) Default setting

- OFF

(3) Setting item

- ON
- “OFF”

7.85.2 Auto Zoom (ADF)

(1) Use

- To set whether to function the auto zoom when the feed tray is selected with document set on the ADF (excepting at automatic paper selection mode.)

(2) Default setting

- ON

(3) Setting item

- “ON”
- OFF

7.85.3 Specify Default Tray when APS Off

(1) Use

- To set the tray to be used when APS is cancelled.
- To set the tray (tray 1) for the default setting when cancelling APS.

(2) Default setting

- Tray Before APS ON

(3) Setting item

- “Tray Before APS ON”
- Default Tray

7.85.4 Print Jobs During Copy Operation

(1) Use

- To set whether to receive printing jobs for print job or fax job during copy operation.
- To restrict receiving printing jobs for print data or fax data during copy operation.

Accept	Receives the print job or fax job and print.
Receive Only	Print job or fax job will be printed when the copy operation is finished.

(2) Default setting

- Accept

(3) Setting item

- “Accept”
- Receive Only

7.85.5 Tri-Fold Print Side

- It will be displayed only when the optional finisher is mounted.

(1) Use

- Specifies the side of copies to be folded.

Inside	Folds paper in three with the printed side in.
Outside	Folds paper in three with the printed side out.

(2) Default setting

- Inside

(3) Setting item

- Outside

- “Inside”

7.85.6 Automatic Image Rotation

(1) Use

- Select whether or not the image is automatically rotated when the document and copy paper orientations are different.

When Auto Paper / Auto Zoom / Reduce is set	If the “Auto” Paper setting, “Auto” Zoom setting or a Reduce setting is selected, the image is automatically rotated to fit the orientation of the paper.
When Auto Paper / Auto Zoom is set	If the “Auto” Paper setting or “Auto” Zoom setting is selected, the image is automatically rotated to fit the orientation of the paper.
When Auto Zoom / Reduce is set	If the “Auto” Zoom setting or a Reduce setting is selected, the image is automatically rotated to fit the orientation of the paper.
When Auto Zoom is set	If the “Auto” Zoom setting is selected, the image is automatically rotated to fit the orientation of the paper.

(2) Default setting

- When Auto Paper / Auto Zoom is set

(3) Setting item

- When Auto Paper / Auto Zoom / Reduce is set
- “When Auto Paper / Auto Zoom is set”
- When Auto Zoom / Reduce is set
- When Auto Zoom is set

7.86 Printer Settings

7.86.1 USB Timeout

(1) Use

- To set a period of time that elapses before input and output timeouts of communication are activated.

(2) Default setting

- 60 seconds

(3) Setting range

- 10 to 1000 seconds

7.86.2 Network Timeout

(1) Use

- To set a period of time that elapses before input and output timeouts of communication are activated.

(2) Default setting

- 60 seconds

(3) Setting range

- 10 to 1000 seconds

7.86.3 Print XPS/OOXML Errors

(1) Use

- To set whether to print error information when an error occurs while printing a XPS or OOXML (Office Open XML) file.

(2) Default setting

- Yes

(3) Setting item

- “Yes”
- No

7.86.4 Assign Account to Acquire Device Info

(1) Use

- Specify whether this machine requests the password from the Windows printer driver when the Windows printer driver acquires device information, for example, which options are installed in this machine.

Yes	Sets a password. By setting a password, the speed at which the printer driver obtains the machine information increases.
No	Does not set a password. The machine authenticates the printer driver with the OpenAPI feature.

(2) Default setting

- No

(3) Setting item

- Yes
- “No”

7.87 Fax Settings

- It will be displayed only when the optional fax kit FK-511 is mounted.

7.87.1 Header Information

(1) Sender

(a) Use

- To register the name of the sender which will be printed when transmitting the fax.
- The name of the sender can register up to 20 can be selectively.

(b) Procedure

1. To register a new sender name, select a “Not Registered” column, touch [New].
   If change the settings of the registered name of sender, select the name of sender and touch [Edit].
2. Enter the sender name (up to 30 characters) on the on-screen keyboard.
3. To set the default value, select the sender name and touch [Set as Default].

NOTE

- **If multiple lines are used, the required sender name can be specified as the default for each line when the following setting is set to “ON.”**
  [Administrator Settings] -> [Fax Settings] -> [TX/RX Settings] -> [Individual Sender Line Setup]

(2) Sender Fax No.

(a) Use

- To register the sender fax number which will be printed when transmitting the fax.

(b) Procedure

- Enter Sender Fax No. (up to 20 characters) using the 10-key pad and [+], [Space] displayed on the screen.

7.87.2 Header/Footer Position

(1) Header Position

(a) Use

- To set the position at which a header position is printed on the fax to be sent.

Inside Body Text	Prints the sender information inside the original image.
Outside Body Text	Prints the sender information outside the original image.
OFF	Prints nothing for sender information.

(b) Default setting

- Outside Body Text

(c) Setting item

- Inside Body Text
- “Outside Body Text”
- OFF

NOTE

- **[Outside Body Text] cannot be selected for Internet Fax/IP Address Fax.**
- **The displays are different depending on the country.**

(2) TTI Print Position and Character Size

(a) Use

- To set the size of characters used for printing sender information.

Normal	Prints the sender information in the normal text size.
Minimal	Reduces the text height to a half of the size set with [Normal].

NOTE

- **If [Normal] is selected for the scanning resolution for sending a fax, it is converted into [Normal] to prevent characters from becoming corrupted and unreadable.**

(b) Default setting

- Minimal

(c) Setting item

- Normal

- "Minimal"

(3) Print Receiver's Name

- It will not be displayed on the screen when [Fax Target] is set to beside "US" or "HK" in the following settings.
  [Service Mode] -> [System 1] -> [Marketing Area] -> [Fax Target]

(a) Use

- To set whether to print destination fax number as header position. If [OFF] is selected, the fax number of this machine is printed instead of the fax number of the destination.

(b) Default setting

- ON

(c) Setting item

- "ON"
- OFF

(4) Footer Position

(a) Use

- To set the position reception information (date, time and reception transaction number) on faxes received on this machine.

Inside Body Text	Prints the receiver information inside the original image.
Outside Body Text	Prints the receiver information outside the original image.
OFF	Prints nothing for receiver information.

(b) Default setting

- OFF

(c) Setting item

- Inside Body Text
- Outside Body Text
- "OFF"

NOTE

- **[Outside Body Text] cannot be selected for the color mode of IP Address Fax.**

7.87.3 Line Parameter Setting

(1) Dialing Method

(a) Use

- To set the dialing method.

(b) Default setting

- PB

(c) Setting item

- "PB"
- 10 pps

NOTE

- **The displays are different depending on the country.**

(2) Receive Mode

- It will not be displayed when the following setting shows that management device 2 is mounted.
  [Service Mode] -> [Billing Setting] -> [Management Function Choice]

(a) Use

- To set the fax reception mode.
- To change to manual reception when using the remote reception function, etc. when connected to the external telephone.

(b) Default setting

- Auto RX

(c) Setting item

- "Auto RX"
- Manual RX

(3) Number of RX Call Rings (Receive Time Interval Setting)

- When the following setting is set to "Time", [Receive Time Interval Setting] will be displayed.
  [Service Mode] -> [FAX] -> [Line1] -> [Network] -> [Network Setting 1] -> [Receive Signal Detection Mode]

(a) Use

- To set the number of times (times) to receive call rings.
- To change the number of times (times) of the fake ringback tone after it starts calling until it starts receiving.

(b) Default setting

- Number of RX Call Rings: 2 X
- Receive Time Interval Setting: 6 sec.

(c) Setting range

- Number of RX Call Rings: 0 to 15 X
- Receive Time Interval Setting: 0 to 45 sec.

(4) Number of Redials

- It will not be displayed when the following setting shows that vender 2 is mounted.
  [Service Mode] -> [Billing Setting] -> [Management Function Choice]

(a) Use

- To set the number of redials.
- To change the number of times to redial when the line is busy, etc.

(b) Default setting

- The default setting is different depending on the country.

(c) Setting range

- 0 to 7 X

NOTE

- **The line which can be set up is different depending on the country.**

(5) Redial Interval

- It will not be displayed when the following setting shows that vender 2 is mounted.
  [Service Mode] -> [Billing Setting] -> [Management Function Choice]

(a) Use

- To set the interval for redialing.

(b) Default setting

- 3 min.

(c) Setting range

- 1 to 15 min.

(6) Line Monitor Sound

(a) Use

- To set whether to output the line monitor sound from the speaker or not.

(b) Default setting

- OFF

(c) Setting item

- ON
- “OFF”

(7) Line Monitor Sound Volume (Send)

(a) Use

- To set the volume of the speaker for the sent signal sound.

NOTE

- **When communicating with fax, monitoring sound is generated even if send or receive monitoring sound of this machine is set to “0” since the sound is generated both on this machine and on the destination side.**
  For setting to mute, set both [Line Monitor Sound Volume (Send)] and [Line Monitor Sound Volume (Receive)] to “0”, or set [Line Monitor Sound] to “OFF”.

(b) Procedure

- Change the volume by touching the [Lower] or [Higher].

(c) Default setting

- 10

(d) Setting range

- 0 to 31

(8) Line Monitor Sound Volume (Receive)

(a) Use

- To sets the volume for the speaker of this machine when outputting the communication sound created on destination side (including exchange equipments or terminals).

NOTE

- **When communicating with fax, monitoring sound is generated even if send or receive monitoring sound of this machine is set to "0" since the sound is generated both on this machine and on the destination side.**
  For setting to mute, set both [Line Monitor Sound Volume (Send)] and [Line Monitor Sound Volume (Receive)] to "0", or set [Line Monitor Sound] to "OFF".

(b) Procedure

- Change the volume by touching the [Lower] or [Higher].

(c) Default setting

- 20

(d) Setting range

- 0 to 31

7.87.4 TX/RX Settings

(1) Duplex Print (RX)

- It will not be displayed when the following setting is set to "ON."
  [Administrator Settings] -> [Fax Settings] -> [TX/RX Settings] -> [Print Separate Fax Pages]

(a) Use

- To set whether to carry out the duplex print for the received document when receiving the fax.

(b) Default setting

- OFF

(c) Setting item

- ON
- "OFF"

(2) Letter/Ledger over A4/A3

(a) Use

- To set whether to use the inch paper priority when receiving the fax.

(b) Default setting

- The default setting is different depending on the country.

(c) Setting item

- ON
- OFF

(3) Print Paper Selection

(a) Use

- To set the priority for paper feed tray when receiving the fax.

Auto Select	Selected automatically.
Fixed Size	Printed only on the fixed size.
Priority Size	Printed on size with priority. When the size is not set, it will be printed on the closest size.

(b) Default setting

- Auto Select

(c) Setting item

- "Auto Select"
- Fixed Size
- Priority Size

(4) Print Paper Size

(a) Use

- To set the paper size to print the received document when receiving the fax.
- To make the setting of [Print Paper Size] enable, set [Administrator Settings] -> [Fax Settings] -> [TX/RX Settings] -> [Tray Selection for RX Print] to “Auto.”

(b) Default setting

- A4

(c) Setting item

- A3
- B4
- “A4”

NOTE

- **The displays are different depending on the country.**

(5) Incorrect User Box No. Entry

(a) Use

- To set the operation when the unregistered box number is entered.

(b) Default setting

- Print

(c) Setting item

- “Print”
- Show Error Message
- Auto Create User Box

(6) Tray Selection for RX Print

(a) Use

- To select the paper tray to be fixed when printing the received document.

(b) Default setting

- Auto

(c) Setting item

- “Auto”
- Tray 1
- Tray 2
- Tray 3
- Tray 4
- LCT

NOTE

- **Tray 3 and Tray 4 will be displayed only when the optional paper feed cabinet PC-110/PC-210/PC-410 is mounted.**
- **LCT will be displayed only when the optional large capacity unit LU-204/LU-301 is mounted.**

(7) Min. Reduction for RX Print

(a) Use

- To set the print magnification for received document.

(b) Default setting

- 96 %

(c) Setting item

- 87 to “96” %
- Full Size

(8) Print Separate Fax Pages

- It will not be displayed when the following setting is set to “ON.”
  [Administrator Settings] -> [Fax Settings] -> [TX/RX Settings] -> [Duplex Print (RX)]

(a) Use

- To set whether to divide the original into pages when it is longer than the standard size.

(b) Default setting

- OFF

(c) Setting item

- ON
- "OFF"

(9) File After Polling TX

(a) Use

- To set whether to delete the original which polling transmission has been completed.

(b) Default setting

- Delete

(c) Setting item

- "Delete"
- Save

(10) No. of Sets (RX)

(a) Use

- To set the number of copies to be printed with the received document.

(b) Default setting

- 1 set.

(c) Setting range

- "1" to 10 set.

(11) Individual Receiving Line Setup

- It will be displayed only when multiple lines are used and the following setting is set to "TX and RX" or "RX Only".
  [Administrator Settings] -> [Fax Settings] -> [Multi Line Settings] -> [Fax Line 2 to 4] -> [Multi Line Settings] -> [Line 2 to 4 Setting]

(a) Use

- Specify whether to configure the individual receiving line setup.
- When this setting is set to "ON," the following settings can be made separately for each fax line:
  Forward TX Setting, TSI User Box Setting, PC-Fax RX Setting, Memory RX Setting, Closed Network RX

(b) Default setting

- OFF

(c) Setting item

- ON
- "OFF"

(12) Individual Sender Line Setup

- It will be displayed only when multiple lines are used and the following setting is set to "TX and RX" or "TX Only".
  [Administrator Settings] -> [Fax Settings] -> [Multi Line Settings] -> [Fax Line 2 to 4] -> [Multi Line Settings] -> [Line 2 to 4 Setting]

(a) Use

- Specify whether to configure the individual sender line setup.
- When this setting is set to "ON," the following settings can be made separately for each fax line:
  Header Information

(b) Default setting

- OFF

(c) Setting item

- ON
- "OFF"

7.87.5 Function Settings-Function ON/OFF Setting

(1) F-Code TX

(a) Use

- To set whether to use the F code transmission.

(b) Default setting

- ON

(c) Setting item

- "ON"
- OFF

NOTE

- **When the setting is changed, turn off the main power switch and turn it on again more than 10 seconds after.**

(2) Relay RX

- It will be displayed only when the following setting is set to "ON."
  [Service Mode] -> [FAX] -> [Line1] -> [System] -> [Display Setting] -> [Relay]

(a) Use

- To set whether to use the relay RX function.
- To use the machine as the relay delivery station during relay TX.

(b) Default setting

- ON

(c) Setting item

- "ON"
- OFF

(3) Relay Printing

- It will be displayed only when the following setting is set to "ON."
  [Service Mode] -> [FAX] -> [Line1] -> [System] -> [Display Setting] -> [Relay]

(a) Use

- To set whether to use the relay print function.
- To print out the document that the machine relayed during relay TX.
- The relay print will be output in the following case.
  1. When the relay delivery completes appropriately.
  2. When the delivery job is cancelled halfway by turning OFF sub power.
  3. When the delivery job is cancelled due to redial over.
  4. When main power switch is turned OFF/ON during relay print error.
  5. When delivery job is deleted in user operation during redialing.
  6. When delivery job is deleted in user operation during relay delivery.

(b) Default setting

- OFF

(c) Setting item

- ON
- "OFF"

(4) Destination Check Display Function

(a) Use

- To set whether or not to display the list of specified addresses when sending the fax.

(b) Default setting

- OFF

(c) Setting item

- ON
- "OFF"

NOTE

- **When set to "ON," set the TX Approval Password (using up to 64 characters).**

(5) Confirm Address (TX)

(a) Use

- To set whether to use Confirm Address (the machine displays the screen where the user reenters the fax number for confirmation when the user faxes by entering the fax number directly with the keys).

(b) Default setting

- OFF

(c) Setting item

- ON
- "OFF"

(6) Confirm Address (Register)

(a) Use

- To set whether to use Confirm Address (the machine displays the screen where the user reenters the fax number for confirmation when the user faxes by entering the fax number directly with the keys).

(b) Default setting

- OFF

(c) Setting item

- ON
- "OFF"

7.87.6 Function Settings-Memory RX Setting

- It will be displayed only when the following setting is set to "ON."
  [Service Mode] -> [FAX] -> [Line1] -> [System] -> [Display Setting] -> [Compulsory Memory RX]
- It will not be displayed when any one of the following settings is set to "ON."
  [Administrator Settings] -> [Fax Settings] -> [Function Settings] -> [PC-Fax RX Setting], [Forward TX Setting] or [TSI User Box Setting]
- If multiple lines are used, you can specify whether to use the Memory RX function for each line when the following setting is set to "ON."
  [Administrator Settings] -> [Fax Settings] -> [TX/RX Settings] -> [Individual Receiving Line Setup]

(1) Use

- To set whether to use the forced memory RX function.
- To store the received document in the hard disk without printing, and print it out when ordered.

(2) Default setting

- No

NOTE

- **When use the memory RX, enter the password (up to 8 digits) for printing.**

(3) Setting item

- Yes
- "No"

NOTE

- **When set to "Yes," enter the password (up to 8 digits) for printing.**

7.87.7 Function Settings-Closed Network RX

- It will be displayed only when the following setting is set to "ON."
  [Service Mode] -> [FAX] -> [Line1] -> [System] -> [Display Setting] -> [Closed area RX]
- If multiple lines are used, you can specify whether to use the Closed Network RX function for each line when the following setting is set to "ON."
  [Administrator Settings] -> [Fax Settings] -> [TX/RX Settings] -> [Individual Receiving Line Setup]

(1) Use

- To set whether to use the closed network function.
- To receive data only from the device which password matches.

(2) Default setting

- No

NOTE

- **When use the closed network RX, enter the password (4 digits) to be used.**

(3) Setting item

- Yes
- "No"

NOTE

- **When set to "Yes," enter the password (4 digits) to be used.**

7.87.8 Function Settings-Forward TX Setting

- It will not be displayed when any one of the following settings is set to "ON."
  [Administrator Settings] -> [Fax Settings] -> [Function Settings] -> [PC-Fax RX Setting], [Memory RX Setting] or [TSI User Box Setting]
- It will not be displayed when the following setting shows that vendor 2 or authentication device 2 is mounted.
  [Service Mode] -> [Billing Setting] -> [Management Function Choice]
- If multiple lines are used, you can specify whether to use the Forward TX function for each line when the following setting is set to "ON."
  [Administrator Settings] -> [Fax Settings] -> [TX/RX Settings] -> [Individual Receiving Line Setup]

(1) Forward TX Setting

(a) Use

- To set whether to use the forward fax function.
- To forward the received document to the receiver which has been specified.

(b) Default setting

- No

(c) Setting item

- Yes
- "No"

NOTE

- **When set to "Yes," set the Output Method and Forward Dest.**

(2) Output Method

(a) Use

- Select whether to print a received document on this machine when forwarding it.

Forward & Print	Forward the received document, and print all out.
Forward & Print (If TX Fails)	Forward the received document, and prints out only when fails to be forwarded.

(b) Default setting

- Forward & Print (If TX Fails)

(c) Setting item

- Forward & Print
- "Forward & Print (If TX Fails)"

(3) Forward Dest.

(a) Use

- To set a forwarding destination for a received document.

(b) Procedure

- Directly enter a fax number using the 10-key, touch [Select from Address Book] and select one of the destinations that are registered in the machine.

NOTE

- **A forwarding address except a case of the fax, specify [File Type] a fax can be converted into a file. The file types able to be specified are PDF, XPS, and TIFF. Other file types can be specified only for the line 1. To specify other file types, the following setting shows that switch No.124 is set to [00000001] at Bit assignment/[01] at HEX assignment.**
  [Service Mode] -> [System 2] -> [Software Switch Setting])
- **If the forward destination is a fax machine, you cannot forward the received network fax. Printing is always carried out on this machine regardless of the setting of output method.**

(4) Select Line

(a) Use

- If multiple lines are used, select the line used to send a fax. If [No Selection] is selected, either line, whichever is not busy, is used for transmission.

(b) Default setting

- No Selection

(c) Setting item

- "No Selection"
- Line 1
- Line 2
- Line 3
- Line 4

7.87.9 Function Settings-Incomplete TX Hold

- It will be displayed only when the following setting is set to "ON."
  [Service Mode] -> [FAX] -> [Line1] -> [System] -> [Display Setting] -> [Re-Transmission]
- It will not be displayed when the following setting shows that key counter or vendor 2 is mounted.
  [Service Mode] -> [Billing Setting] -> [Management Function Choice]

(1) Use

- To set whether to use incomplete TX hold function.
- To re-send the data failed to be sent after a given time.

(2) Default setting

- No

(3) Setting item

- Yes

- "No"

NOTE

- **When set to Yes, specify the File Storage Duration.**

7.87.10 Function Settings-PC-Fax Permission Setting

(1) Use

- Select whether to allow PC-Fax TX using the fax driver.

(2) Default setting

- Allow

(3) Setting item

- "Allow"
- Restrict

7.87.11 Function Settings-PC-Fax RX Setting

- It will not be displayed when any one of the following settings is set to "ON."
  [Administrator Settings] -> [Fax Settings] -> [Function Settings] -> [Forward TX Setting], [Memory RX Setting] or [TSI User Box Setting]
- If multiple lines are used, you can specify whether to use the PC-Fax RX function for each line when the following setting is set to "ON."
  [Administrator Settings] -> [Fax Settings] -> [TX/RX Settings] -> [Individual Receiving Line Setup]

(1) Use

- To set whether to use the PC-Fax reception function.
- To store the received document file in the box in the hard disk.

(2) Default setting

- Restrict

(3) Setting item

- Allow
- "Restrict"

NOTE

- **When "Allow" is selected, make the settings of Receiving User BOX Destination, Print ON/OFF, and Password check ON/OFF.**

7.87.12 Function Settings-TSI User Box Setting

- It will not be displayed when any one of the following settings is set to "ON."
  [Administrator Settings] -> [Fax Settings] -> [Function Settings] -> [Forward TX Setting], [Memory RX Setting] or [PC-Fax RX Setting]
- If multiple lines are used, you can specify whether to use the TSI user Box function for each line when the following setting is set to "ON."
  [Administrator Settings] -> [Fax Settings] -> [TX/RX Settings] -> [Individual Receiving Line Setup]

(1) TSI User Box Setting

(a) Use

- To set whether to use TSI distribution or not.

(b) Procedure

- Touch the [TSI User Box Registration] and register the distribution.

(c) Default setting

- No

(d) Setting item

- Yes
- "No"

(2) Action when TSI User Box is not set

(a) Use

- To set setting method when there is no matched box at receiving.

Automatically Print	To print the received data.
Memory RX Use Box	To store the received data in the forced memory receiving box.
Specified User Box	To store the received documents in a User Box of this machine.

(b) Default setting

- Automatically Print

(c) Setting item

- "Automatically Print"

- Memory RX User Box
- Specified User Box

(3) Print

(a) Use

- To set whether to use Print function or not.

(b) Default setting

- No

(c) Setting item

- Yes
- "No"

(4) TSI User Box Registration

(a) Use

- To register the forwarding destination for each sender's fax number (TSI).

(b) Procedure

1. Select the registered number, touch [Edit].
2. Touch [Sender (TSI)], and enter a sender's fax number.
3. Touch [Select from Address Book] and select a destination, or touch [Search by User Box Number], then enter the number of the User Box you want to save received faxes in.

NOTE

- **When you want to specify a destination from the address book when the optional upgrade kit UK-204 and i-Option LK-110 are enabled, tap File Type to specify the file type for forwarding. The file types able to be specified are PDF, XPS, and TIFF.**

7.87.13 Function Settings-TSI All File Type Settings

- This is displayed only when the optional i-Option LK-110 and upgrade kit UK-204 are enabled.
- It will not be displayed when any one of the following settings is set to "ON."
  [Administrator Settings] -> [Fax Settings] -> [Function Settings] -> [Forward TX Setting], [Memory RX Setting] or [PC-Fax RX Setting]
- It will not be displayed when the following setting shows that vendor 2 or key counter IF vendor is mounted.
  [Service Mode] -> [Billing Setting] -> [Management Function Choice]

(1) File Type

(a) Use

- To set the file type to automatically forward a received fax using the TSI distribution function.

(b) Default setting

- PDF

(c) Setting item

- "PDF"
- TIFF
- XPS

(2) Scan Setting

(a) Use

- To set a filing page unit when a received fax contains multiple pages.

Multi Page	To convert all pages to a single file.
Page Separation	To the specified number of pages to perform conversion.

(b) Default setting

- Multi Page

(c) Setting item

- "Multi Page"
- Page Separation

(3) E-mail Attachment Method

(a) Use

- To set the E-mail attachment method when "Page Setting" is set to "Page Separation".

All Files Sent as one (1) E-mail	Attaches all files to one E-mail.
One (1) File per E-Mail	Sends one E-mail for each file.

(b) Default setting

- All Files Sent as one (1) E-mail

(c) Setting item

- "All Files Sent as one (1) E-mail"
- One (1) File per E-Mail

(4) PDF Detail Setting

(a) Use

- To set the PDF option settings when you select PDF as the file format.

(b) Default setting

- PDF Web Optimization: No Limit
- Searchable PDF: OFF
- PDF/A: OFF

(c) Setting item

PDF Web Optimization
- Enable
- "No Limit"

Searchable PDF
- ON
- "OFF"

PDF/A
- PDF/A-1a
- PDF/A-1b
- "OFF"

7.87.14 Function Settings-TX-Line Auto Switch Setting

(1) Use

- To set whether to automatically switch to the required line when the required line is not specified to send a fax while multiple lines are used.

Yes	The available line is searched from Line 1 to send a fax.
No	The job is discarded.

(2) Default setting

- Yes

(3) Setting item

- "Yes"
- No

NOTE

- **If the line specified to send a fax is not available, the job is discarded.**

7.87.15 PBX Connection Setting

(1) Use

- To set whether to use PBX connection setting or not.
- This will be used when the machine is connected to PBX line.

(2) Default setting

- No

NOTE

- **When use PBX connection setting, enter the external number between 0 and 9999.**

7.87.16 Report Settings

(1) Activity Report

- It will not be displayed when the following setting shows that vendor 2 is mounted.
  [Service Mode] -> [Billing Setting] -> [Management Function Choice]

(a) Use

- To set whether to print out the activity report or not, and also the timing for printing.

(b) Default setting

- ON

(c) Setting item

- "ON"

- OFF

NOTE

- **When this setting is set to ON, make the setting of Output Setting and Output Time Settings.**

(d) Output Setting

Default setting

- Every 100 Comm.

Setting item

- Daily
- "Every 100 Comm."
- 100/ Daily

(e) Remark Column Print Setup

Use

- To set whether or not to print user or account name in the remarks column of the activity report if user authentication or account track is enabled on this machine.

Default setting

- Normal Printing

Setting item

- "Normal Printing"
- User Name Printing
- Account Name Printing

(2) TX Result Report

(a) Use

- To set whether to print out the TX report, and also the timing for printing.

(b) Default setting

- If TX Fails

(c) Setting item

- ON
- "If TX Fails"
- OFF

(3) Sequential TX Report

(a) Use

- To set whether to print out the sequential TX report or not.

(b) Default setting

- ON

(c) Setting item

- "ON"
- OFF

(4) Timer Reservation TX Report

(a) Use

- To set whether to print out the reservation TX or not.

(b) Default setting

- ON

(c) Setting item

- "ON"
- OFF

(5) Confidential RX Report

(a) Use

- To set whether to print out the confidential RX report.

(b) Default setting

- ON

(c) Setting item

- "ON"
- OFF

(6) Bulletin TX Report

(a) Use

- To set whether to print out the bulletin TX report or not.

(b) Default setting

- ON

(c) Setting item

- "ON"
- OFF

(7) Relay TX Result Report

- It will be displayed only when the following setting is set to "ON."
  [Service Mode] -> [FAX] -> [Line1] -> [System] -> [Display Setting] -> [Relay]

(a) Use

- To set whether to print out the relay TX result report or not.
- To print out the relay TX result report after the relay delivery is completed when the machine is used as the relay delivery station.

(b) Default setting

- ON

(c) Setting item

- "ON"
- OFF

(8) Relay Request Report

- It will be displayed only when the following setting is set to "ON."
  [Service Mode] -> [FAX] -> [Line1] -> [System] -> [Display Setting] -> [Relay]

(a) Use

- To set whether to print out the relay request RX report or not.
- To print out the relay request RX report during relay request RX when the machine is used as the relay delivery station.

(b) Default setting

- ON

(c) Setting item

- "ON"
- OFF

(9) PC-Fax TX Error Report

(a) Use

- To set whether to print out the PC-Fax TX error report or not.

(b) Default setting

- OFF

(c) Setting item

- ON
- "OFF"

(10) Broadcast Result Report

(a) Use

- To set the format to output the broadcast result report.

All Destinations	Outputs all reports after transmitting to all addresses.
Each Destination	Outputs a report after each transmission.

(b) Default setting

- All Destinations

(c) Setting item

- "All Destinations"
- Each Destination

(11) TX Result Report Check

(a) Use

- To set whether to display the TX result report screen.

(b) Default setting

- OFF

(c) Setting item

- ON
- “OFF”

(12) Network Fax RX Error Report

- It will be displayed only when either [IP Address Fax Function] or [Internet Fax Function] is set to “ON” in the following settings.
  [Administrator Settings] -> [Network Settings] -> [Network Fax Settings] -> [Network Fax Function Settings]

(a) Use

- To set whether to print RX error report when network fax function is being used.
- To print the error report at unusual situation such as receiving the image data that cannot be processed.

(b) Default setting

- ON

(c) Setting item

- “ON”
- OFF

(13) Print Job Number

- It will not be displayed when the report addition information is set to “Diagnosis Code” or “Dial Number” by the following setting.
  [Service Mode] -> [FAX] -> [Line1] -> [List Output] -> [Report Addition Information]
- It will not be displayed when the following setting shows that switch No.77 is set to [00000100] at Bit assignment/[04] at HEX assignment.
  [Service Mode] -> [System 2] -> [Software Switch Setting]

(a) Use

- To set whether to display a job number on the report to be printed.
- The following shows the report of target.
  Activity Report, TX Report, RX Report, TX Result Report, Broadcast Result Report

(b) Default setting

- OFF

(c) Setting item

- ON
- “OFF”

(14) MDN Message

- It will be displayed only when [Internet Fax Function] is set to “ON” in the following settings.
  [Administrator Settings] -> [Network Settings] -> [Network Fax Settings] -> [Network Fax Function Settings]

(a) Use

- To set whether to print message when receiving response message to MDN request when internet fax function is being used.

(b) Default setting

- ON

(c) Setting item

- “ON”
- OFF

(15) DSN Message

- It will be displayed only when [Internet Fax Function] is set to “ON” in the following settings.
  [Administrator Settings] -> [Network Settings] -> [Network Fax Settings] -> [Network Fax Function Settings]

(a) Use

- To set whether to print message when receiving response message to DSN request when network fax function is being used.

(b) Default setting

- OFF

(c) Setting item

- ON
- "OFF"

(16) Print E-mail Message Body

- It will be displayed only when [Internet Fax Function] is set to "ON" in the following settings.
  [Administrator Settings] -> [Network Settings] -> [Network Fax Settings] -> [Network Fax Function Settings]

(a) Use

- To set whether to print mail text received normally as the report when internet fax function is being used.

(b) Default setting

- ON

(c) Setting item

- "ON"
- OFF

7.87.17 Job Settings List

- It will not be displayed when the following setting shows that vendor 2 is mounted.
  [Service Mode] -> [Billing Setting] -> [Management Function Choice]
  (It will be displayed when the key counter is mounted or when the following setting shows that switch No.33 is set to [00000001] at Bit assignment/[01] at HEX assignment.
  [Service Mode] -> [System 2] -> [Software Switch Setting])

(1) Use

- The set value list of the fax set up into this machine can be printed.

(2) Procedure

1. Touch [Administrator Settings] -> [Fax Settings] -> [Job Settings List].
2. Select the feed tray.
3. Select the 1-Sided or 2-Sided, and press the Start key or touch [Start].

NOTE

- **When multiple lines are used, specify a line in line settings to print the setting value of the specified line on the list.**

7.87.18 Multi Line Settings-PC-FAX TX Line Setting

- It will be displayed only when the optional fax kit FK-511 (line 2) or FK-508 (line 3 or line 4) is mounted.
- It will be not displayed when [PC-Fax Permission Setting] is set to "Restrict" in the following setting.
  [Administrator Settings] -> [Fax Settings] -> [Function Settings] -> [PC-Fax Permission Setting]

(1) Use

- To set the number of the line used for PC-Fax transmission.

(2) Default setting

- No Selection

(3) Setting item

- Line 1
- Line 2
- Line 3
- Line 4
- "No Selection"

NOTE

- **Line 2 to 4 will be displayed only when the following setting is set to "TX and RX" or "TX Only".**
  [Administrator Settings] -> [Fax Settings] -> [Multi Line Settings] -> [Fax Line 2 to 4] -> [Multi Line Settings] -> [Line 2 to 4 Setting]

7.87.19 Multi Line Settings-Fax Line 2 to 4-Line Parameter Setting

- It will be displayed only when the optional fax kit FK-511 (line 2) or FK-508 (line 3 or line 4) is mounted.

(1) Dialing Method

(a) Use

- To set the dial method for the expanded line.

(b) Default setting

- PB

(c) Setting item

- "PB"
- 10 pps

NOTE

- **The displays are different depending on the country.**

(2) Number of Rx Call Rings (Receive Time Interval Setting)

- When the following setting is set to "Time", [Receive Time Interval Setting] will be displayed.
  [Service Mode] -> [FAX] -> [Line2 to 4] -> [Network] -> [Network Setting 1] -> [Receive Signal Detection Mode]

(a) Use

- To set the number of times (times) to receive call rings for the expanded line.
- To change the number of times (times) of the fake ringback tone with expanded line after it starts calling until it starts receiving.

(b) Default setting

- Number of RX Call Rings: 2 X
- Receive Time Interval Setting: 6 sec.

(c) Setting range

- Number of RX Call Rings: 0 to 15 X
- Receive Time Interval Setting: 0 to 45 sec.

(3) Line Monitor Sound

(a) Use

- To set whether or not to output the line monitor sound of the expanded line from the speaker.

(b) Default setting

- OFF

(c) Setting item

- ON
- "OFF"

7.87.20 Multi Line Settings-Fax Line 2 to 4-Function Settings

- Not used.

7.87.21 Multi Line Settings-Fax Line 2 to 4-Multi Line Settings

- It will be displayed only when the optional fax kit FK-511 (line 2) or FK-508 (line 3 or line 4) is mounted.

(1) Multi Line Usage

(a) Procedure

- When selecting [Normal], perform the transmission setting for Line 2 to 4.

(2) Line 2 to 4 Setting

(a) Default setting

- TX and RX

(b) Setting item

- "TX and RX"
- RX Only
- TX Only

7.87.22 Multi Line Settings-Fax Line 2 to 4-Sender Fax No.

- It will be displayed only when the optional fax kit FK-511 (line 2) or FK-508 (line 3 or line 4) is mounted.

(1) Use

- To register/change the fax ID of the line 2 to 4 when using multiple lines.

(2) Procedure

- Enter Sender Fax No. (up to 20 characters) using the 10-key pad and [+], [Space] displayed on the screen.

7.87.23 Network Fax Settings-Internet Fax Self Rx Ability

- It will be displayed only when [Internet Fax Function] is set to "ON" in the following settings.

[Administrator Settings] -> [Network Settings] -> [Network Fax Settings] -> [Network Fax Function Settings]

(1) Use

- To set image data compression system, paper size and resolution, which can be received by the machine with internet fax.

(2) Procedure

- The following shows the options of each setting item.

Compression Type	Paper Size	Resolution
JPEG Color	A3	Ultra Fine
JPEG (Grayscale)	B4	Super Fine
MMR	A4	Fine
MR	-	Std.
MH	-	-

7.87.24 Network Fax Settings-Internet Fax Advanced Settings

- It will be displayed only when [Internet Fax Function] is set to “ON” in the following settings.
  [Administrator Settings] -> [Network Settings] -> [Network Fax Settings] -> [Network Fax Function Settings]
- To set advanced functions of internet fax.

NOTE

- **Only MDN Request will be sent when both MDN Request and DSN Request are set to “Yes.”**

(1) MDN Request

(a) Use

- To set whether to send MDN (Message Disposition Notification) request when transmitting through internet fax.

(b) Default setting

- Yes

(c) Setting item

- “Yes”
- Do Not Send

(2) DSN Request

(a) Use

- To set whether to send DSN (Delivery Status Notification) request when transmitting through internet fax.

(b) Default setting

- Do Not Send

(c) Setting item

- Yes
- “Do Not Send”

(3) MDN Response

(a) Use

- To set whether to response for MDN request made by the other machine when receiving through internet fax.

(b) Default setting

- Yes

(c) Setting item

- “Yes”
- Do Not Send

(4) MDN/DSN Response Monitoring Time

(a) Use

- To set the period to observe the response from the other machine when sending MDN/DSN request.
  In the case of time over, time out message is notified.

(b) Default setting

- 24 hours

(c) Setting item

- 1 to 99 hours

- Do Not Monitor

(5) Maximum Resolution

(a) Use

- To set maximum resolution for reading, TX/RX and record when internet fax function is being used.

(b) Default setting

- Ultra Fine

(c) Setting item

- “Ultra Fine”
- Super Fine

(6) Add Content-Type Information

(a) Use

- To set whether or not to add Content-Type information when using Internet fax.
  When “Yes” is selected, “application=faxbw” is added as sub-type to MIME Content-Type header.

(b) Default setting

- Do Not Send

(c) Setting item

- Yes
- “Do Not Send”

7.87.25 Network Fax Settings-IP Address Fax Operation Settings

- It will be displayed only when [IP Address Fax Function] is set to “ON” in the following settings.
  [Administrator Settings] -> [Network Settings] -> [Network Fax Settings] -> [Network Fax Function Settings]

(1) Operation Mode

(a) Use

- To set the operational mode applied to IP address fax.

Mode1	This mode allows communication between Konica Minolta models capable of transmitting IP address faxes and models compatible with the Direct SMTP standard defined by CIAJ. However, a unique method developed for Konica Minolta models is used to transmit a color fax.
Mode2	This mode allows communication between Konica Minolta models capable of transmitting IP address faxes and models compatible with the Direct SMTP standard defined by CIAJ. The transmission in color mode is performed in the communication mode (Profile-C format) compatible with the Direct SMTP standard.

(b) Default setting

- Mode1

(c) Setting item

- “Mode1”
- Mode2

NOTE

- **When set to “Mode2”, to set whether to allow the transmission of color originals.**

7.87.26 Fax Print Quality Settings

(1) Use

- To set whether to correct the received document of G3 fax according to the resolution.

Prioritize Quality	Corrects and outputs the received image.
Prioritize Speed	Does not correct the received image, which results in a shorter output time.

(2) Default setting

- Low Resolution: Prioritize Quality
- High Resolution: Prioritize Speed

(3) Setting item

Low Resolution

- “Prioritize Quality”
- Prioritize Speed

High Resolution

- Prioritize Quality
- “Prioritize Speed”

7.88 System Connection

7.88.1 OpenAPI Settings-Access Setting

(1) Use

- To select Allow or Restrict for access from the PageScope Data Administrator or the other systems that use OpenAPI.

(2) Default setting

- Allow

(3) Setting item

- "Allow"
- Restrict

7.88.2 OpenAPI Settings-SSL/Port Settings

(1) Use

- To set the SSL/access port for other systems with OpenAPI.

(2) SSL Setting

(a) Default setting

- Non-SSL Only

(b) Setting item

- "Non-SSL Only"
- SSL Only
- SSL/Non-SSL

(3) Port No./Port Number (SSL)

(a) Procedure

1. Select Port No. or Port Number (SSL), and touch [Input].
2. Touch Clear.
3. Enter the port number between 1 and 65535 using the 10-key pad.

(4) Client Certificate

(a) Default setting

- Invalid

(b) Setting item

- Enable
- "Invalid"

(5) Certificate Verification Level Settings

Expiration Date	Select whether to check that the server certificate is within the validity period.
Key Usage	Select whether to check that the server certificate is used according to the purpose approved by the issuer.
Chain	• Select whether to check that the server certificate chain (certification path) is correct. • The chain is validated by referencing the external certificates managed on this machine.
Expiration Date Confirmation	• Select whether to check that the server certificate is within the validity period. • The OCSP service and CRL (Certificate Revocation List) are checked in this order when the expiration date of the certificate is checked.
CN	Select whether to check that the CN of the server certificate matches the server address.

7.88.3 OpenAPI Settings-Authentication

(1) Use

- To select ON or OFF for authentication applied when the PageScope Data Administrator or the other systems that use OpenAPI access MFP.
- To set authentication of the access from other systems using OpenAPI.

(2) Default setting

- OFF

(3) Setting item

- ON
- "OFF"

NOTE

- **When setting to [ON], enter the login name and the password to be set.**

7.88.4 OpenAPI Settings-External Application Connection

(1) Use

- To select whether or not to use external application connection of the OpenAPI.

(2) Default setting

- Yes

(3) Setting item

- “Yes”
- No

7.88.5 OpenAPI Settings-Proxy Settings

- Register your proxy server when using a proxy server to associate this machine with a different system that supports OpenAPI.

(1) Port Number (HTTP)

(a) Use

- To set a port number of the proxy server used for HTTP.

(b) Procedure

1. Touch [Input].
2. Touch Clear.
3. Enter the port number using the 10-key pad whin the range of 1 to 65535.

(2) Port Number (HTTPS)

(a) Use

- To set a port number of the proxy server used for HTTPS.

(b) Procedure

1. Touch [Input].
2. Touch Clear.
3. Enter the port number using the 10-key pad whin the range of 1 to 65535.

(3) Port Number (FTP)

(a) Use

- To set a port number of the proxy server used for FTP.

(b) Procedure

1. Touch [Input].
2. Touch Clear.
3. Enter the port number using the 10-key pad whin the range of 1 to 65535.

(4) Proxy Server Address/Proxy Authentication

(a) Use

- To register information on the proxy server to be used.

<Host Address>

- Enter the proxy server address.

<User Name>

- Enter the user name to log in to the proxy server (using up to 63 characters).

<Password>

- Enter the password (using up to 63 characters).

7.88.6 OpenAPI Settings-Specified Application Start Setting

- This is displayed when the following setting is set to "Permit". [Service Mode] -> [System 2] -> [Application Change Setting].

(1) Use

- Configure a setting to launch only the prespecified OpenAPI application when this machine has started up.

(2) Default setting

- Invalid

(3) Setting item

- Enable
- “Invalid”
- When [Enable] is selected, configure the following settings.

<Default Startup Application Selection>

(a) Use

- Specify the OpenAPI application to be launched when using this function.

(b) Default setting

- Displays the application name with the lowest number among the activable applications.

<Basic Functions Setting>

(a) Use

- To set whether to use the basic functions of this machine when using this function.

(b) Default setting

- Restrict

(c) Setting item

- Allow
- “Restrict”

7.88.7 Call Remote Center

- It will be displayed when the setup at the CS Remote Care center is complete.

(1) Use

- To call the CS Remote Care center from the administrator, when the CS Remote Care setup is complete.

(2) Procedure

- For details, see “I.11.6 CS Remote Care (Outlines).”

7.88.8 Prefix/Suffix Automatic Setting

(1) Use

- Select whether to automatically add prefix and suffix to a destination number.

(2) Default setting

- OFF

(3) Setting item

- ON
- “OFF”

7.88.9 Printer Information

- It will be displayed only when the optional local interface kit EK-607 is mounted.

(1) Use

- Specify [Printer Name], [Printer Location], [Printer Information], and [Printer URI].
  The [Printer Information] setting is linked to [Printer Information] in [HTTP Server Settings].

(2) Procedure

1. Touch [Printer Information].
2. Enter the printer name, printer location and printer information using the keyboard on the display.
3. Touch [Printer URI], and confirm the printer URI information.

7.88.10 Cellular Phone/PDA Setting

- It will be displayed only when the optional local interface kit EK-607 is mounted.

(1) Use

- Specify whether to allow the user to print data in a cellular phone or PDA or save such data in a User Box.

(2) Default setting

- Allow

(3) Setting item

- “Allow”
- Restrict

7.89 Security Settings-Administrator Password

7.89.1 Use

- To set/change the administrator password.

7.89.2 Procedure

- Enter the administrator password on the on-screen keyboard.
  1. Enter the current administrator password
  2. Password: Enter the new administrator password to be used
  3. Password Confirmation: Re-enter the new administrator password

NOTE

- **When "Enable" is selected in [Administrator Settings] -> [Security Settings] -> [Security Details] -> [Password Rules], the following passwords cannot be accepted: password of single repeated characters, password same as the one before being changed, and password where the number of characters is less than the minimum number specified in [Set Minimum Password Length].**

7.90 Security Settings-User Box Administrator Setting

- Setting is disabled if user authentication or account track is not performed.

7.90.1 Use

- To set whether to allow or restrict the box administrator to use the system.
- To allow the box administrator to use the system.
  The box administrator is the special administrator for box, who is allowed to browse contents in common box / individual box without the password.

7.90.2 Default setting

- Restrict

7.90.3 Setting item

- Allow
- "Restrict"

NOTE

- **[Allow] cannot be selected when user authentication and account track are not conducted.**
- **If [Administrator Settings] -> [Security Settings] -> [Enhanced Security Mode] is set to "ON", selecting "Allow" in this setting cancels enhanced security mode.**
- **Set the password when setting to [Allow].**
- **When "Enable" is selected in [Administrator Settings] -> [Security Settings] -> [Security Details] -> [Password Rules], the following passwords cannot be accepted: password of single repeated characters, password same as the one before being changed, and password where the number of characters is less than the minimum number specified in [Set Minimum Password Length].**

7.91 Security Settings-Administrator Security Levels

- It will not be displayed when the following setting shows that vendor 2 is mounted.
  [Service Mode] -> [Billing Setting] -> [Management Function Choice]

7.91.1 Use

- To set the level for administrator settings item open to the user.
- To make part of the administrator settings items open to the user.

Level 1	Allows users to configure [Low Power Mode Settings], [Sleep Mode Settings], [Auto Zoom (Platen)], [Auto Zoom (ADF)], [Specify Default Tray when APS Off], [Tri-Fold Print Side], and [Automatic Image Rotation].
Level 2	Allows users to configure the items contained in [Level 1], [Print/Fax Output Settings], [Output Tray Settings], [AE Level Adjustment], [Blank Page Print Settings], [Page Number Print Position], [Change E-mail Address], and [Print Jobs During Copy Operation].
Prohibit	Not to allow the user to set neither Level 1 nor Level 2

7.91.2 Default setting

- Prohibit

7.91.3 Setting item

- Level 1
- Level 2
- "Prohibit"

7.92 Security Settings-Security Details

7.92.1 Password Rules

(1) Use

- To set whether to apply the password rules.
- To apply the password rule to enhance security.

- Passwords to be covered: CE password, administrator password, user password, account track password, public user box password, user box administrator password, passwords for confidential documents, WebDAV server password, SNMPv3 Write User password, remote panel server password, Encryption Passphrase
- Details of the password rules:
  - Minimum number of characters specified in [Set Minimum Password Length] (Default: 12 characters)
  - Upper- and lower-case letters are distinguished in alphabetical letters.
  - Only one-byte symbols can be used.
  - Password with only the same letter is prohibited.
  - Password same with the one prior to change is prohibited.

  NOTE
  - **When the password rule is set to [Enable], the password cannot be changed or registered unless it follows the above conditions.**

- When [Enable] is selected, it is possible to determine the minimum number of characters that a password can contain. (8 to 64 characters, Default: 12 characters)

(2) Default setting

- Invalid

(3) Setting item

- Enable
- "Invalid"

NOTE

- **If [Administrator Settings] -> [Security Settings] -> [Enhanced Security Mode] is set to "ON", selecting "Invalid" in this setting cancels enhanced security mode.**
- **[Enable] cannot be selected when the following setting is set to "OFF."**
  [Service Mode] -> [Enhanced Security] -> [CE Authentication]
  "OFF" setting of [CE Authentication] will not be displayed and cannot be set to "OFF" when [Password Rules] is set to "Enable."

7.92.2 Prohibited Functions When Authentication Error

(1) Use

- To set the function for prohibiting authentication operation in order to prevent the unauthorized access.
- To use when setting the system to prohibit authentication failure when conducting authentication by password, etc.
- Authentications which are subjected to this function: CE authentication, administrator authentication, user+ accounts authentication, SNMP authentication, secure print authentication, user box authentication.

<table>
<tr><td>Mode 1</td><td>When failed to authenticate, authentication operation (entering the password) will be prohibited for a certain period of time.</td></tr>
<tr><td>Mode 2</td><td>When failed to authenticate, authentication operation (entering the password) will be prohibited for a certain period of time.
The number of times failure occurred will be counted, and when the number reaches to the specified time, authentication will be prohibited and the access will be locked.
When the access is locked, touch [Release] on the main body, or turn main power switch OFF/ON to cancel it.
For CE authentication and administrator authentication, only turning main power switch OFF/ON will cancel it.
When the machine goes into an access lock condition, release the lock in the following procedure.</td></tr>
<tr><td>User & Accounts authentication</td><td rowspan="6">• Touch keys in the following order. [Administrator Settings] -> [Security Setting] -> [Security Details] -> [Prohibited Functions When Authentication Error]. Then touch [Release].</td></tr>
<tr><td>Secure print authentication</td></tr>
<tr><td>User Box authentication</td></tr>
<tr><td>SNMP authentication</td></tr>
<tr><td>WebDAV Server authentication</td></tr>
<tr><td>Remote Panel authentication</td></tr>
<tr><td rowspan="2">Administrator authentication</td><td>• After the main power switch is turned OFF and ON, the access lock is released automatically after the lapse of a predetermined period of time.</td></tr>
<tr><td>• [Service Mode] -> [Enhanced Security] -> [Administrator unlocking]</td></tr>
<tr><td>CE authentication</td><td>• Main power switch is turned OFF and ON.
• Menu -> [Counter] -> [Print List]
• Touch [Display Keypad], displaying 10-key pad.
• The lock release timer starts to operate by input the Stop -> 0 -> 9 -> 3 -> 1 -> 7
• When the timer reaches the time specified in this setting, the access lock is released.</td></tr>
</table>

(2) Default setting

- Mode 1

(3) Setting item

- "Mode 1"
- Mode 2

NOTE
- **If [Administrator Settings] -> [Security Settings] -> [Enhanced Security Mode] is set to "ON", selecting "Mode 1" in this setting cancels enhanced security mode.**
- **Only the number of times for trials up to the access lock can be changed.**
- **When [Mode 2] is selected, set the number of times where checks are made before access is locked.**

(4) Procedure
- Touch [Release Time Settings] and set a period of time that elapses before access lock is released.

7.92.3 Confidential Document Access Method
(1) Use
- To display the status of the authentication system on the control panel for the confidential document access.
- It cannot be changed at the operator's option since it will automatically be set according to the [Prohibit Functions When Auth. Error] setting.
- It will be set to [Mode 1] when [Prohibit Functions When Auth. Error] is set to [Mode 1].
  It will be set to [Mode 2] when [Prohibit Functions When Auth. Error] is set to [Mode 2].

Mode 1	This mode is for authentication by confidential document ID and password. It displays the list of the corresponding confidential document to print them.
Mode 2	This mode is for authentication by confidential document ID. It displays the list of the corresponding confidential document, and print them with authentication by password.

(2) Default setting
- Mode 1

(3) Setting item
- "Mode 1"
- Mode 2

NOTE
- **[Mode 2] is selected when the following setting is set to "ON."**
  [Administrator Settings] -> [Security Settings] -> [Enhanced Security Mode]

7.92.4 Manual Destination Input
(1) Use
- To set whether to allow or prohibit to manually enter the destination address on the destination Input screen.

Allow All	Allows manual destination input in all transmission options.
Individual Allowance	Allows manual destination input only for fax and restricts it in other transmission options.
Restrict	Hides the [Direct Input] tab to prevent you from directly entering destinations.

(2) Default setting
- Allow All

(3) Setting item
- "Allow All"
- Individual Allowance
- Restrict

7.92.5 Print Data Capture
(1) Use
- To set whether to allow or restrict capturing the print job data.
- To be used when carrying out [Service Mode] -> [System 2] -> [Data capture].

(2) Default setting
- Allow

(3) Setting item
- "Allow"
- Restrict

NOTE
- **If [Administrator Settings] -> [Security Settings] -> [Enhanced Security Mode] is set to "ON", selecting "Allow" in this setting cancels enhanced security mode.**

7.92.6 Job Log Settings
(1) Use
- Selects whether to keep logs of operations and access made by users and service engineers.
- To set whether to overwrite existing logs.
- To ensure security, this settings is used to keep logs of operations and access including security settings changes, authentication, and job executions by users and service engineers.

- Logs are saved in HDD.

(2) Job Log Settings

(a) Default setting

- No

(b) Setting item

- Yes
- "No"

NOTE

- **After selecting "Yes", the main power switch must be turned OFF and ON so that the new setting takes effect.**
- **When "ON" is selected in [Administrator Settings] -> [Security Settings] -> [Enhanced Security Mode], this setting is automatically set to "Yes."**

(3) Overwrite

(a) Use

- Set whether to allow or restrict overwriting existing logs when saving audit logs.

(b) Default setting

- Allow

(c) Setting item

- "Allow"
- Restrict

NOTICE

- To erase audit logs, press [Erase Job Log].

7.92.7 Restrict Fax TX

(1) Use

- To set whether or not to prohibit sending fax.

(2) Default setting

- OFF

(3) Setting item

- ON
- "OFF"

7.92.8 Personal Data Security Settings

(1) Use

- Selects whether to display file names and destinations in Job History/Current Job.
- To retain security, this function is used to hide file names and destinations displayed in Job History/Current Job.

(2) Default setting

- Yes (with user authentication)
- No (without user authentication)

(3) Setting item

- "Yes" (with user authentication)
- "No" (without user authentication)
- When selecting [Yes], configure the following settings.

Job History	Select whether to hide personal information, such as destination and file name, in [Log] in the [Job List] screen. The default is [No] (without user authentication/account track) or [Yes] (with user authentication/account track).
Current Job	Select whether to hide personal information, such as destination and file name, in [Active] in the [Job List] screen. The default is [No] (without user authentication/account track) or [Yes] (with user authentication/account track).

- When you have selected [Yes], select items you want to hide.

Display Settings	Mode 1	Doc. Name/Destination, User Box
	Mode 2	Doc. Name/Destination, User Box, User Name

- Select how to display items you specified in [Display Settings] per Public User, User Authentication, and Authentication Track.

Mode 1	Hide all display items.
Mode 2	Hide only display items other than for login user/login account.

Mode 3	Hide only display items other than for a public user, login user/public user, and login account.
Mode 4	Show all display items.

7.92.9 Hide Personal Information (MIB)

- If [Administrator Settings] -> [Security Settings] -> [Enhanced Security Mode] is set to “ON”, selecting “OFF” in this setting cancels enhanced security mode.

(1) Use

- Specify whether to display the file name, address, or User Box number as MIB information in Job List.

(2) Default setting

- ON

(3) Setting item

- “ON”
- OFF

7.92.10 Display Activity Log

(1) Use

- Selects whether to display communication logs for scan/fax transmission.

(2) Default setting

- ON

(3) Setting item

- “ON”
- OFF

7.92.11 Initialize

(1) Use

- All data of selected items is cleared.
- Data of the following items can be cleared.
  - Job History
  - Copy Program
  - Network Settings
  - Address Registration
  - Enhanced Server Information

(2) Procedure

1. Touch [Initialize].
2. Select the desired item to clear its data and touch [OK].
3. Select [Yes] on the confirmation screen and touch [OK] to initialize the data.

7.92.12 Secure Print Only

(1) Use

- To set whether or not to allow only Secure Print for print jobs from PC.
  When “ON” is selected in this setting, the Secure Print feature must be always used for printing from a printer driver. As all print jobs require ID or a password, output documents remains private.

(2) Default setting

- No

(3) Setting item

- Yes
- “No”

7.92.13 Copy Guard

- It will be displayed only when the optional security kit SC-508 is mounted.

(1) Use

- Specify whether to use the Copy Guard function.
  If [Copy Guard] is selected in [Application], you can embed copy inhibit information on paper.
- This is used upon set-up of the optional security kit SC-508.

(2) Default setting

- No

(3) Setting item

- Yes
- "No"

7.92.14 Password Copy

- It will be displayed only when the optional security kit SC-508 is mounted.

(1) Use

- Specify whether to use the Password Copy function.
  If [Password Copy] is selected in [Application], you can embed a password on paper. You can also detect a password embedded on paper.
- This is used upon set-up of the optional security kit SC-508.

(2) Default setting

- No

(3) Setting item

- Yes
- "No"

7.92.15 Web browser contents access

- It will be displayed only when an extended function of the web browser via OpenAPI application is enabled.

(1) Use

- To set whether to enable or disable access to locally-stored files (pre-installed contents, image files, and help files) from the web browser that is interacting with MFP via OpenAPI applications.

(2) Default setting

- Allow

(3) Setting item

- "Allow"
- Restrict

NOTE

- **When using the application where server authentication is carried out by web browser extensions, [Allow] is automatically selected.**

7.92.16 TX Operation Log

(1) Use

- To select whether or not to save the history of operations performed on the control panel to send scanned files or faxes as TX operation logs.
- To print the saved sending operation logs or save them in USB memory, select [Utility] -> [Administrator Settings] -> [System Settings] -> [List/Counter] -> [TX Operation Log Output] on the Control Panel.
- [TX Operation Log Erase] is available only when [Save] is selected. When changing from [Save] to [Do Not Save], check in with users about erasing TX operation logs.

(2) Default setting

- Do Not Save

(3) Setting item

- Save
- "Do Not Save"

7.92.17 Hardware Encryption

(1) Use

- To set whether to encrypt communications using the hardware.
- To enhances the communication speed using the hardware for communication encryption compared with using the software for communication encryption.

ON (SSL/TLS)	To encrypt an SSL/TLS communication using the hardware.
ON (IPsec)	To encrypt an IPsec communication using the hardware.
OFF	To encrypt an SSL/TLS or IPsec communication using the software. [OFF] is specified by default.

7.92.18 Export Debug Log

- This is displayed only when Switch No. "155" is set to "01" in HEX Assignment in [Service Mode] -> [System 2] -> [Software Switch Setting].

(1) Use

- To select whether or not allow CE to export debug information (logs) from the MFP to use the information to analyze problem in the MFP.

(2) Default setting

- Restrict

(3) Setting item

- Allow
- “Restrict”

7.92.19 Write the Configuration from USB

(1) Use

- To set whether to permit a change on the settings of this machine by loading the configuration file saved in USB memory.

(2) Default setting

- Allow

(3) Setting item

- “Allow”
- Restrict

7.92.20 HDD backup data Settings.

(1) Use

- To set whether to permit our service representative to back up or restore the hard disk on this machine.
- Refer to I.12.3.11 HDD Data Backup for detail.

(2) Default setting

- Restrict

(3) Setting item

- Allow
- “Restrict”

7.93 Security Settings-Enhanced Security Mode

7.93.1 Use

- To set whether or not to enhance security.
- To use when enhancing the security function at user’s option.
- The following settings are necessary for setting the security enhancement “ON”.

Administrator Password	Change it with the one which meets password rules.
User Authentication	Set to “ON (MFP)”, “External Server Authentication”, or “Main + External Server”.
HDD encryption word	Set the encryption word with 20 characters.
SSL Certificate	Register self-certificate for SSL communication from the PSWC.
CE Password	Change it with the one which meets password rules.
CE Authentication	Set to [ON].
Image Controller Setting	Set to [Controller 0].
Management Function Choice	Set to “Unset.”

7.93.2 Default setting

- OFF

7.93.3 Setting item

- ON
- “OFF”

NOTE

- **Note that setting Enhanced Security Mode to “ON” disables the following functions.**
  - **Print Data Capture (forcibly prohibited when Enhanced Security Mode is set to “ON”)**
  - **In CS Remote Care, the following operation is prohibited.**
    - **Rewriting instructions of firmware, communication of the account track counter information, the setting renewal of the machine.**
    - **Firmware upgrading through Internet ISW (When the Enhanced Security Mode is set to ON, the setting of this function cannot be changed from “OFF.”)**
- **Setting the Enhanced Security Mode “ON” will change the setting values for the following functions.**
- **In addition, the indicator of “not be changed” below indicates that the settings cannot be changed while Enhanced Security Mode is maintained “ON”.**

Function Name		Default Setting	When Enhanced Security mode is set to [ON]
Password Rules	To apply the password rule to enhance security.	Invalid	Enable (not to be changed)
Prohibit Functions When Authentication Error	To set the function for prohibiting Authentication operation in order to prevent the unauthorized access.	Mode 1	Mode 2 (not to be changed): Three times is set. * The number of times can be changed to once, twice, or three times. (It is twice, four or six times for WebDAV server password.)
Confidential Document Access Method	To display the status of the Authentication system on the control panel for the Confidential document access.	Mode 1	Mode 2 (not to be changed) * In association with Prohibit Functions When Auth. Error, the method is changed from authentication using Secure Document ID and password (Mode 1) to that using the password with the Secure Document first narrowed down by Secure Document ID (Mode 2).
Public User Access	To permit use by a public user having no user registration if user authentication setting has been made.	Restrict	Restrict (not to be changed)
User Name List	To display the list key for User names on User Authentication screen.	OFF	OFF (not to be changed)
Print without Authentication	To allow or restrict printing which user and account are not specified.	Restrict	Restrict (not to be changed)
User Box Administrator Setting	To set whether to allow or restrict the Box Administrator to use the system.	Restrict	Restrict (not to be changed)
SSL	To set whether to encrypt access by SSL.	OFF	ON (not to be changed)
SSL Encryption Strength	To set the SSL encryption strength for the SSL encryption communication.	AES-256, 3DES-168, RC4-128, DES-56, RC4-40	AES/3DES (not to be changed to one containing strength lower than AES/3DES)
Automatically Obtain Certificates of S/MIME	-	No	No (not to be changed)
S/MIME Encryption Method	-	3DES	3DES (not to be changed to DES or RC-2)
FTP Server	To set whether to use FTP server or not.	ON	OFF (not to be changed)
SNMPv1/v2c	To use when changing Write setting.	Read/Write enable	Only Read is enabled (not to be changed)
SNMP v3 Security Level and auth/priv-password	To set the security level for the Reading/Writing Authority User which is used for SNMP v3.	auth/priv-password	• The security level can be selected from among [authpassword] and [auth/priv-password]. • An 8-digit-or-more auth-password and priv-password can both be set.
Print Data Capture	To set whether to allow or restrict capturing the Print Job Data.	Allow	Restrict (not to be changed)
Network Setting Clear	To clear the network setting through PageScope Web Connection.	Enabled	Restrict
Release Time Settings	To set the period of time to be elapsed before the access lock state is released.	5 min.	The setting value should be 5 min. or more (no value less than 5 can be set)
Destination Registration Change by User (Address Book and Program destination)	-	Allow	Restrict (not to be changed)
Secure Print User Box Preview	-	Thumbnail View, Detail View, and Document Details are enabled	Only Detail View is enabled before password authentication (Mode 2)
Initialize (Network Settings)	To clear the network related settings.	Enabled	Restrict (not to be changed)
Image Log Transfer Settings	Specifies whether to transfer the input or output image data	OFF	OFF (not to be changed)

Function Name		Default Setting	When Enhanced Security mode is set to [ON]
	to the server using whenever MFP inputs or outputs image data.		
Machine Update Settings	**To set firmware upgrading by Internet ISW, and enable or disable various settings.**	**No**	**No (not to be changed)**
operation Ban release time	**To set the period of time to be elapsed before the access lock state is released in CE password authentication.**	**5 min.**	**The setting value should be 5 min. or more (no value less than 5 can be set)**
E-mail RX Print	**To print an E-mail attachment, send an E-mail to the E-mail address of this machine.**	**OFF**	**OFF (not be changed)**
IWS Settings	**Set the operating environment of IWS (Internal Web Server) function.**	**OFF**	**OFF (not be changed)**
HDD backup data Settings	**Set whether to permit our service representative to back up or restore the hard disk on this machine.**	**Restrict**	**Restrict (not be changed)**

7.94 Security Settings-HDD Settings

7.94.1 Check HDD Capacity

(1) Use

- To display the used space capacity, total space capacity, and the remaining capacity of the hard disk.
- To check the capacity and the status of use of the hard disk.

7.94.2 Overwrite HDD Data

- When the image becomes unnecessary, temporary data overwrite function will write meaningless data over all area where images are stored, and destroy the image data itself.
  The structure of image data will be destroyed so that in case HDD is stolen, the remaining data included in the image data will not leak.
  Using the HDD lock password function or HDD encryption function along with this function will provide a high level of security which prevents images of great importance from leaking. It is recommended to use HDD lock password function or HDD encryption function along with this function for those who require high level of security.

(1) Overwrite HDD Data

(a) Use

- To set whether or not to use overwrite temporary data.
- To use when making temporary data overwrite function valid.
- All data are temporarily written into HDD during PC print, copy, scanning and fax transmission. When the operation is complete, perform overwriting to the area data were once written in HDD in order to enhance security.

(b) Default setting

- No

(c) Setting item

- Yes
- “No”

NOTE

- **When selecting [Yes], select an overwrite method.**

(2) Overwrite Method

(a) Use

- To set overwriting method to use temporary data overwrite function.
- To change overwriting method to use temporary data overwrite function.

Mode 1	To overwrite 0x00 one time.
Mode 2	Overwrite 0x00 -> overwrite 0xff -> overwrite 0x61 -> validation

(b) Default setting

- Mode 1

(c) Setting item

- “Mode 1”
- Mode 2

(3) Encryption Priority/Overwrite Priority

(a) Use

- "Encryption Priority/Overwrite Priority" can be selected.

Encryption Priority	When the encryption word is set, the security level of the data will be enhanced before writing to HDD. When erasing data, they will all be converted into encryption data before overwritten. Therefore, overwriting will be executed with the value besides the value specified by the selected mode.
Overwrite Priority	• Standard encryption method will be applied to data written to HDD even when the encryption word is set, so overwriting and erasing will be performed without fail using the specified value in the selected mode. • It is used for performing the overwriting and erasing according to the HDD data erase standard.

NOTE

- **It is necessary to make HDD format when encryption priority/overwrite priority setting is changed. Make sure to configure the following settings after formatting the HDD.**
  - **The movie data, voice data, OCR dictionary data and the PDF/A font will be reinstalled by using the data install function on the service mode.**
    [Service Mode] -> [System 2] -> [Install Data]

(b) Default setting

- Encryption Priority

(c) Setting item

- "Encryption Priority"
- Overwrite Priority

7.94.3 Overwrite All Data

(1) Use

- To delete the whole data in the hard disk by overwriting.
- To initialize the area of use for the user stored in SSD board.
- To use when disposing of the hard disk.
- Select the overwriting method from Mode 1 through 8.

Mode 1	It overwrites 0x00 once.
Mode 2	Overwrites with random numbers -> overwrites with random numbers -> overwrites with 0x00
Mode 3	Overwrites with 0x00 -> overwrites with 0xff -> overwrites with random numbers -> verifies
Mode 4	Overwrites with random numbers -> overwrites with 0x00 -> overwrites with 0xff
Mode 5	Overwrites with 0x00 -> overwrites with 0xff -> overwrites with 0x00 -> overwrites with 0xff
Mode 6	Overwrites with 0x00 -> overwrites with 0xff -> overwrites with 0x00 -> overwrites with 0xff -> overwrites with 0x00 -> overwrites with 0xff -> overwrites with random numbers
Mode 7	Overwrites with 0x00 -> overwrites with 0xff -> overwrites with 0x00 -> overwrites with 0xff -> overwrites with 0x00 -> overwrites with 0xff -> overwrites with 0xaa
Mode 8	Overwrites with 0x00 -> overwrites with 0xff -> overwrites with 0x00 -> overwrites with 0xff -> overwrites with 0x00 -> overwrites with 0xff -> overwrites with 0xaa -> verifies

(2) Procedure

1. Touch [Overwrite All Data].
2. Select a mode and touch [Delete].
3. Select [Yes] on the confirmation screen and touch [OK].
4. Turn off the main power switch and turn it on again more than 10 seconds after.

7.94.4 HDD Lock Password

(1) Use

- To set the lock password for the hard disk.
- To enter, change or delete the lock password for the hard disk.

NOTE

- **Don't forget the password.**
- **After setting a lock password, if you replace the HDD due to its breakage or other reasons and install a new HDD, an error message is displayed. In that case, clear the HDD lock password and set a new password using this function.**

(2) Procedure

1. Touch [HDD Lock Password].
2. Enter the password (20 characters) on the on-screen keyboard, and touch [OK].
   NOTE
   - **Password using only a single letter is not acceptable.**
   - **Don't forget the password. When the password is forgotten, the replacement of hard disk is needed.**
3. Re-enter the password to confirm.
4. Turn OFF the main power switch and turn it ON again more than 10 seconds after.

7.94.5 Format HDD

(1) Use

- To conduct logical formatting of HDD.

NOTE

- **It is subject to logical formatting here, therefore if starting with physical formatting, follow as [Service Mode] -> [State Confirmation] -> [Memory/HDD Adj.] -> [HDD Format].**
- **Make sure to configure the following settings after formatting the HDD.**
  - **The movie data, voice data, OCR dictionary data and the PDF/A font will be reinstalled by using the data install function on the service mode.**
    [Service Mode] -> [System 2] -> [Install Data]

(2) Procedure

1. Touch [Format HDD].
2. Select [Yes] on the confirmation screen and touch [OK].
3. Turn off the main power switch and turn it on again more than 10 seconds after.

7.94.6 HDD Encryption Setting

(1) Use

- To re-set encrypting passphrase due to exchange of SSD board or etc.

NOTE

- **HDD formatting is required after this setting. Therefore it is necessary to retrieve certain data from HDD in advance.**
  The following data will be lost after HDD formatting.
  1. **Address data**
  2. **Authentication data: Authentication mode, user authentication setting, account track setting**
  3. **Box setting data: Box and text in the box, setting information of each box, box for fax**
  4. **Job history, fax transmission history**

  And after setting the HDD encryption key, the movie data, voice data, OCR dictionary data, PDF/A font, OCR font, and Unicode font need to be reinstalled as necessary since these data will be deleted by HDD format.
- **If you replace the HDD due to its breakage or other reasons, you can automatically reset the encryption passphrase by installing a new HDD and performing the logical format.**
- **Make sure to configure the following settings after formatting the HDD.**
  - **The movie data, voice data, OCR dictionary data and the PDF/A font will be reinstalled by using the data install function on the service mode.**
    [Service Mode] -> [System 2] -> [Install Data]

(2) Procedure

1. Press [HDD Encryption Setting].
2. Enter encryption passphrase (20 characters) with the keyboard on the operation panel and press [OK].
   NOTE
   - **Double-byte and identical characters are not acceptable.**
3. Turn off the main power switch and turn it on again more than 10 seconds after.
4. Open [Administrator Settings] and conduct HDD formatting according to the instruction appeared on the panel.
5. Turn off the main power switch and turn it on again more than 10 seconds after.

7.94.7 Debug Log Encryption Settings

(1) Use

- To set a password used to encrypt debug data when storing it into the HDD.

(2) Default setting

- 01234567890123456789

(3) Procedure

- Enter an encryption passphrase from the on-screen keyboard.
  1. Enter the encryption passphrase currently in use.
  2. Encryption Passphrase: Enter a new encryption passphrase.
  3. Encryption Passphrase Confirmation: Re-enter the new encryption passphrase.

7.95 Security Settings-Function Management Settings

7.95.1 Usage Settings for Each Function

- It will be displayed only when the following setting shows that vendor 2 or management device 2 is mounted.
  [Service Mode] -> [Billing Setting] -> [Management Function Choice]

(1) Use

- To set whether to use management function for each item of [Copy], [Print], [Send Data] and [Other Prints].
  [Other Prints] is not displayed when vendor 2 is connected.

ON	Can be used after authentication or coin insertion.
OFF	Can be used without authentication or coin insertion.

(2) Default setting

- ON

(3) Setting item

- "ON"
- OFF
- Restrict

7.95.2 Maximum Job Allowance

- It will be displayed only when the following setting shows that vendor 2 is mounted.
  [Service Mode] -> [Billing Setting] -> [Management Function Choice]

(1) Use

- To set the upper limit of the number of copy or PC print when management function has been set.

(2) Default setting

- 9999

(3) Setting range

- 1 to "9999"

7.95.3 Network Function Usage Settings

(1) Use

- To set whether to use network function or not when management function has been set.
- Not to use the network function whose counter is difficult to be managed when management function has been set.
- The following are target functions.
  PC-FAX transmission/Using the HDD TWAIN driver to view and retrieve documents in user boxes/Using PageScope Box Operator to view and retrieve documents in user boxes/Box operations using the PageScope Web Connection.

(2) Default setting

- ON

(3) Setting item

- "ON"
- OFF

NOTE

- **However, when the vendor or management device setting in the Service Mode is set, this setting is set to OFF.**
  Exercise caution since it will stay in "OFF" setting even when "unset" is selected on vendor or management device setting in Service Mode later.

7.96 Security Settings-Stamp Settings

7.96.1 Apply Stamps

(1) Use

- Selects whether to add a stamp to documents when jobs are printed or scanned/fax data is sent.

(2) Default setting

- Do Not Apply

(3) Setting item

- Apply
- "Do Not Apply"

(4) Procedure

- Touch "Apply" to make stamp settings independently for print and transmission modes.

7.96.2 Delete Registered Stamp

(1) Use

- Deletes registered stamps, and copy protect/repeat stamps.

(2) Procedure

1. Touch [Delete Registered Stamp].
2. Select [Stamp] or [Copy Protect/Stamp Repeat].
3. Select [Yes] on the confirmation screen and touch [OK] to delete the registered stamps.

7.97 Security Settings-Image Log Transfer Settings

7.97.1 Image Log Transfer Settings

- This is displayed only when Switch No. “63” is set to [00000001] at Bit assignment/[01] at HEX assignment (Type 1) or [00000010] at Bit assignment/[02] at HEX assignment (Type 2) in [Service Mode] -> [System 2] -> [Software Switch Setting].

7.97.2 Image Log Transfer Settings (Type1)

(1) Use

- Specifies whether to transfer the input or output image data to the server using whenever MFP inputs or outputs image data. Makes the settings of the WebDAV Server, the FTP Server, or the SMB Server where image data are transferred.
- Use this settings to keep logs of input and output image data for security purpose.

(2) Default setting

- OFF

(3) Setting item

- ON
- “OFF”

(4) Procedure

- When selecting [ON], configure the following settings.

1. Select Forwarding Destination and configure the sever settings.

WebDAV Server setting	Host Name, File Path, User Name, Password, Port Number, Proxy, SSL Settings
FTP Server setting	Host Name, File Path, User Name, Password, Port Number, PASV, and Proxy
SMB Server setting	Host Name, File Path, User Name, Password

2. Specify Audit Item.

All Items	Applied to Fax TX, Fax RX, Scan, and Others.
Individual Item	Can be selected from Fax, Fax RX, and Scan.

7.97.3 Image Log Transfer Settings (Type2)

(1) Use

- To select whether or not to transfer only input/output images in Fax TX/RX to the server when image data is input or output to or from MFP.

(2) Default setting

- OFF

(3) Setting item

- ON
- “OFF”

(4) Procedure

- When selecting [ON], configure the following settings.

1. Configure the file type and scan setting.
2. Select Forward or Do Not Forward for Fax TX/RX. To transfer data, select [Forwarding Dest.] and configure the server settings.

FTP Server setting	Host Name, File Path, User Name, Password, Port Number, PASV, and Proxy
SMB Server setting	Host Name, File Path, User Name, Password
WebDAV Server setting	Host Name, File Path, User Name, Password, Port Number, Proxy, SSL Settings

7.98 Security Settings-Driver Password Encryption Setting

7.98.1 Use

- To set whether to use the factory default encryption word or user-defined one as a common key that encrypts a password used for a print job.

User-Defined	Sets an encryption word. Enter an encryption word of 20 letters.
Use Factory Default	Uses the factory default encryption word (undisclosed predefined encryption key).

NOTE

- **When selecting [User-Defined], set an encryption key being consisted of the same letters in the printer driver. If the encryption word set in the main body differs from the encryption key set in the printer driver, different encrypted passwords are created and printing cannot be made.**
- **The use of OpenAPI allows an encryption key to be obtained from the main body.**

7.98.2 Default setting

- Use Factory Default

7.98.3 Setting item

- User-Defined
- “Use Factory Default”

7.99 Security Settings-FIPS Settings

7.99.1 FIPS Settings

(1) Use

- To set whether to enable the Fips mode.
- To disable using specific ciphers (RC4, RC2, DES, etc.) and specific hash functions (MD5, MD4, etc.) by enabling FIPS mode.

(2) Default setting

- Invalid

(3) Setting item

- Enable
- “Invalid”

7.100 License Settings

7.100.1 Get Request Code

(1) Use

- To display and print a request code and serial number used to activate i-Option.
- Used to confirm the request code and serial number.

(2) Procedure

1. Touch [Get Request Code], and [Yes].
2. A serial number and request code are issued.
3. By touching [Print], the serial number and request code are printable.

7.100.2 Install License

- This is displayed only when the optional upgrade kit UK-204 is installed.

(1) Use

- To allow administrator to activate functions provided by i-Option.
- The functions can be activated by entering Function/License Code or Token Code.
- By making settings in [Service Mode] -> [Billing Setting], CE can also activate functions provided by i-Option.

NOTE

- **When activating i-Option, MFP accesses to KM license server via WebDAV connection. Set the proxy server setting in [Administrator Settings] -> [Network Settings] -> [WebDAV Settings] -> [Proxy Setting for Remote Access] as occasion demands.**
- **For accessing to KM license server, it is necessary to select “Fixed Address” in [Service Mode] -> [Billing Setting] -> [WebDAV Server Setting].**
- **When the server connection error “MAE001” is displayed, check the network settings.**

(2) Procedure (Function/License Code)

1. Touch [Install License].
2. Touch [Function/License Code].
3. Touch [Function Code].
4. Enter the Function Code.
5. Touch [OK].
6. Touch [License Code].
7. Enter the license code that was issued in the license management server using the key board on the control panel, and touch [OK].
8. Touch [Install].
9. Confirm the message, select [Yes], and touch [OK].
10. Turn OFF and ON the main power switch.

(3) Procedure (Token Code)

1. Touch [Token Code].
2. Touch one of the Token Codes 1 to 10.
3. Enter the Token Code.
4. Touch [OK].
5. Touch [Install].
6. Confirm the message, select [Yes], and touch [OK].
7. Turn OFF and ON the main power switch.

7.100.3 List of Enabled Functions

- This is displayed only when the optional upgrade kit UK-204 is mounted.

(1) Use

- To display currently activated functions.

7.101 Voice Guidance Settings-Voice Guidance

7.101.1 Use

- To select whether or not to enable the voice guidance function.
- Selecting [Yes] allows you to configure the settings on the voice guidance function in the [Accessibility] screen.

NOTE

- **To use voice guidance, the optional upgrade kit UK-204 and i-Option LK-104 v3 must be activated, and the optional local interface kit EK-606 or EK-607 is mounted.**

7.101.2 Default setting

- No

7.101.3 Setting item

- Yes
- "No"

7.102 OpenAPI Certification Management Setting

7.102.1 Restriction Code Settings

(1) Use

- These are communication settings for the application which is developed by the third vendor.
  Do not set or change these settings without vendor's instructions.

7.103 External Memory Backup

7.103.1 Import/Export

- This is displayed only when Switch No. 72 is set to [00000100] at Bit assignment/[04] at HEX assignment in [Service Mode] -> [System 2] -> [Software Switch Setting].

(1) Use

- To export various types of setting information to an external memory (USB memory).
- To import various types of setting information from other machine via the USB memory.
- Types of data that can be exported and imported: Address Book, Authentication Data, Network Settings, Remote Access Setting, User Setting, Administrator Setting

(2) Procedure (Import)

1. Connect the external memory to the machine.
2. Touch [Import].
3. Touch [Password], enter the password previously set for the import data, and touch [OK].
4. Touch [Start].
5. Import results appear.

(3) Procedure (Export)

1. Connect the external memory to the machine.
2. Touch [Export].
3. Select the item to be exported.
4. Touch [Password], enter the password of the export data, and touch [OK].
5. Touch [Start].
6. Export results appear.

7.104 Remote Access Setting

7.104.1 Import/Export User Data

(1) Use

- To set whether to remotely rewrite (import or export) user data such as address information using the CS Remote Care.

(2) Default setting

- Restrict

(3) Setting item

- Allow
- "Restrict"

8. UTILITY (OTHER SETTINGS)

8.1 Banner Printing

- It will not be displayed when the following setting shows that vendor 2 is mounted.
  [Service Mode] -> [Billing Setting] -> [Management Function Choice]

8.1.1 Use

- To shift to the banner printing mode.
- To use when printing on the long size paper.

8.1.2 Procedure

1. Set the long size paper to the bypass tray.
2. Touch [Banner Printing], and touch [Allow].
3. Send the job for the long paper print.
4. Touch [Exit] to finish banner printing mode.

NOTE

- **Only PC print is available for the long paper print.**
- **Normal job cannot be accepted during banner printing mode.**

8.2 My Panel Settings

- It is displayed when the optional upgrade kit UK-204 is validated and PageScope My Panel Manager is installed.
- This is displayed only when a registered user is logging in after user authentication.
  However, this is not displayed when both management device 2 and user authentication are used.

8.2.1 Use

- To make various settings about My Panel.
- To customize My Panel screen for individual registered users.
- Items that can be set are as follows:
  Language Setting, Measurement Unit Setting, Copier Settings, Scan/Fax Settings, User Box Settings, Color Selection Setting, Main Menu Settings, and Initial Screen Setting

8.2.2 Procedure

1. Touch [My Panel Settings].
2. Touch a key that represents a desirable item and change its settings.

NOTE

- **Registering, editing, and deleting My Panel settings are allowed only when logging in as a registered user.**
- **When My Panel is not customized, the settings for MFP take effect in the three of the control panel settings, Language setting, Measurement unit setting, and Color selection setting.**
- **Depending on the functions provided by each MFP and the optional device configuration, not all My Panel settings may not take effect.**

8.3 Device Information

8.3.1 Use

- To display the function version of the firmware installed in MFP and the IP address.

8.3.2 Procedure

- Touch [Device Information] to check the function version and IP address.
  About function version
  - Model: bizhub 364e/284e/224e
  - Function version: Version 3

8.4 Remote Panel Operation

- It will be displayed only when the following setting is set to “ON.”
  [Administrator Settings] -> [Network Settings] -> [Remote Panel Settings] -> [Client Settings]

8.4.1 Use

- To start remote operations of the control panel of the machine.

9. ADJUSTMENT ITEM LIST

9.1 Replace feed roller, pick-up roller, separation roller (tray 1, tray 2)

Replacement part/Service job	Adjustment/setting items	Setting order
Replace feed roller, pick-up roller, separation roller (tray 1, tray 2)	[Service Mode] / [Counter] / [Life] / [Counter Clear]	1

9.2 Replace feed roller, separation roller assy (manual bypass tray)

Replacement part/Service job	Adjustment/setting items	Setting order
Replace feed roller, separation roller assy	[Service Mode] / [Counter] / [Life] / [Counter Clear]	1

9.3 Install LCT (Built-in)

Replacement part/Service job	Adjustment/setting items	Setting order
Install LCT (Built-in)	[Service Mode] / [System2] / [LCT (Built-in) Size Settings]	1
	[Service Mode] / [Machine] / [Printer Area] / [Printer Image Centering Side 1]	2
	[Service Mode] / [Machine] / [Printer Area] / [Prt. Image Center. Side 2 (Dup)]	3
	[Service Mode] / [Machine] / [Printer Area] / [Tray Printing Position: Tip]	4

9.4 Replace CCD unit

Replacement part/Service job	Adjustment/setting items	Setting order
Replace CCD unit	[Service Mode] / [System2] / [CCD Calibration]	1
	[Service Mode] / [System2] / [Line Mag Setting]	2
	[Service Mode] / [Machine] / [Printer Area] / [Paper Feed Direction Adj.]	3
	[Service Mode] / [Machine] / [Scan Area] / [Main Scan Zoom Adj.]	4
	[Service Mode] / [Machine] / [Scan Area] / [Scanner Image Side Edge]	5

9.5 Replace developing unit

Replacement part/Service job	Adjustment/setting items	Setting order
Replace developing unit	[Service Mode] / [Imaging Process Adjustment] / [Gradation Adjust]	1

9.6 Replace drum unit

Replacement part/Service job	Adjustment/setting items	Setting order
Replace drum unit	[Service Mode] / [Imaging Process Adjustment] / [Gradation Adjust]	1

9.7 Replace transfer belt unit

Replacement part/Service job	Adjustment/setting items	Setting order
Replace transfer belt unit	[Service Mode] / [Counter] / [Life] / [New Release]	1
	[Service Mode] / [Imaging Process Adjustment] / [Gradation Adjust]	2

9.8 Replace PH unit

Replacement part/Service job	Adjustment/setting items	Setting order
Replace PH unit	[Service Mode] / [Machine] / [Printer Area] / [Leading Edge Adjustment]	1
	[Service Mode] / [Machine] / [Printer Area] / [Printer Image Centering Side 1]	2

9.9 Replace original size detection sensor

Replacement part/Service job	Adjustment/setting items	Setting order
Replace original size detection sensor	Installation of original size sensor	1
	[Service Mode] / [State Confirmation] / [Table Number]	2

9.10 Replace scanner motor

Replacement part/Service job	Adjustment/setting items	Setting order
Replace scanner motor	Scanner motor belt adjustment	1

9.11 Replace scanner home sensor

Replacement part/Service job	Adjustment/setting items	Setting order
Replace scanner home sensor	[Service Mode] / [Machine] / [Scan Area] / [Image position: Leading Edge]	1

9.12 Replace printer control board

Replacement part/Service job	Adjustment/setting items	Setting order
Replace printer control board	Installing the firmware	1
	[Service Mode] / [Enhanced Security] / [Engine Data Backup] / [Engine Data Reflect Mode]	2

9.13 Replace MFP board

Replacement part/Service job	Adjustment/setting items	Setting order
Replace MFP board	Entering the machine type information	1
	Installing the firmware	2
	Restore (backup) data	3
	[Service Mode] / [Imaging Process Adjustment] / [Gradation Adjust]	4

9.14 Replace SSD board

Replacement part/Service job	Adjustment/setting items	Setting order
Replace SSD board	Installing the firmware.	1

NOTE

- **Contact Konica Minolta technical support, if the SSD board needs a replacement.**

9.15 Replace original glass

Replacement part/Service job	Adjustment/setting items	Setting order
Replace original glass	[Service Mode] / [Machine] / [Scan Area] / [Scanner Image Side Edge]	1
	[Service Mode] / [Machine] / [Scan Area] / [Image Position: Leading Edge]	2

9.16 Replace hard disk

Replacement part/Service job	Adjustment/setting items	Setting order
Replace hard disk	[Service Mode] / [State Confirmation] / [Memory/HDD Adj.] / [HDD Format]	1
	[Service Mode] / [State Confirmation] / [Memory/HDD Adj.] / [HDD R/W Check]	2
	Install Data	3

9.17 Replace control panel unit

Replacement part/Service job	Adjustment/setting items	Setting order
Replace control panel unit	Touch panel calibration	1
	[Accessibility] / [Touch Panel Adjustment]	2

9.18 Replace DF control board (DF-701/DF-624)

Replacement part/Service job	Adjustment/setting items	Setting order
Replace DF control board	Installing the firmware	1
	[Service Mode] / [ADF] / [Original Tray Width]	2
	[Service Mode] / [ADF] / [Mixed original Size adjustment]	3

9.19 Add key counter

Replacement part/Service job	Adjustment/setting items	Setting order
Add key counter	Re-entry of Enhanced Security settings	1

9.20 Execute initialize

Replacement part/Service job	Adjustment/setting items	Setting order
Execute initialize	[Service Mode] / [System 2] / [HDD] / [Installed]	1
	Re-entry of Utility settings	2
	[Service Mode] / [System 1] / [Serial Number]	3
	[Service Mode] / [System 1/2] and re-entry of setting values	4
	Re-entry of Enhanced Security settings	5
	[Accessibility] / [Touch Panel Adjustment]	6

9.21 Add an optional device

Replacement part/Service job	Adjustment/setting items	Setting order
Add an optional device	[Service Mode] / [Firmware Version]	1

9.22 Execute F/W update

Replacement part/Service job	Adjustment/setting items	Setting order
Execute F/W update	[Service Mode] / [Firmware Version]	1

9.23 Add fax board

Replacement part/Service job	Adjustment/setting items	Setting order
Add fax board	[Service Mode] / [System2] / [Option Board Status]	1
	Installing the firmware	2
	[Service Mode] / [System1] / [Marketin Area] / [Fax Target]	3

9.24 Mount DF-624

Replacement part/Service job	Adjustment/setting items	Setting order
Mount DF-624	ADF adjusting the height	1
	Adjusting front side skew feed on ADF	2
	[Service Mode] / [ADF] / [Read Pos Adj]	3
	[Service Mode] / [ADF] / [Feed Zoom]	4

9.25 Mount DF-701

Replacement part/Service job	Adjustment/setting items	Setting order
Mount DF-701	ADF adjusting the height	1
	Adjusting front side skew feed on ADF	2
	Adjusting back side skew feed on ADF	3
	[Service Mode] / [ADF] / [Original Tray Width]	4
	[Service Mode] / [ADF] / [Original Stop Position]	5
	[Service Mode] / [ADF] / [Feed Zoom]	6
	[Service Mode] / [ADF] / [FD-Mag. Adj. (B)]	7
	[Service Mode] / [ADF] / [Main Scanning Direction Zoom]	8
	[Service Mode] / [ADF] / [Read Pos Adj]	9
	[Service Mode] / [System 2] / [CIS Image Adjustment]	10

9.26 Replace CIS module

Replacement part/Service job	Adjustment/setting items	Setting order
Replace CIS module	Adjusting back side skew feed on ADF	1
	[Service Mode] / [ADF] / [Feed Zoom]	2

Replacement part/Service job	Adjustment/setting items	Setting order
	[Service Mode] / [ADF] / [FD-Mag. Adj. (B)]	3
	[Service Mode] / [ADF] / [Auto Stop Position Adjustment]	4
	[Service Mode] / [ADF] / [Main Scanning Direction Zoom]	5
	[Service Mode] / [ADF] / [Read Pos Adj]	6
	[Service Mode] / [System 2] / [CIS Image Adjustment]	7

10. LIST OF SERVICE MODE

10.1 List of service mode (outline)

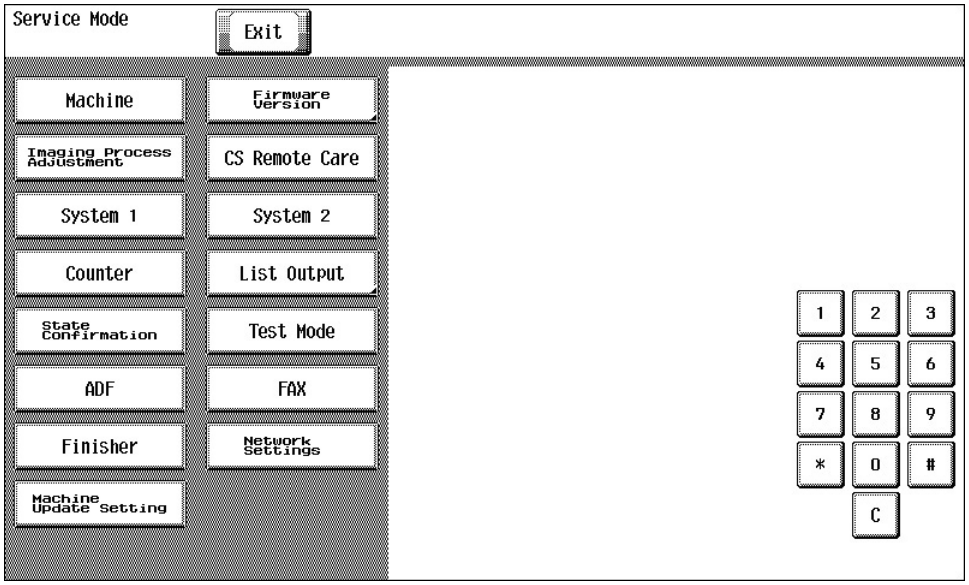

NOTE

- **After exiting Service Mode, you must turn OFF the main power switch. Turning ON the main power switch again after waiting 10 seconds makes the changes to the Service Mode setting take effect.**
- **The function tree is shown to comply with the format displayed on the screen.**

Service Mode	Machine	I.10.2.1 Machine
	Firmware Version	I.11.4 Firmware Version
	Imaging Process Adjustment	I.10.2.2 Imaging Process Adjustment
	CS Remote Care	I.10.2.3 CS Remote Care
	System 1	I.10.2.4 System 1
	System 2	I.10.2.5 System 2
	Counter	I.10.2.6 Counter
	List Output	I.10.2.7 List Output
	State Confirmation	I.10.2.8 State Confirmation
	Test Mode	I.10.2.9 Test Mode
	ADF *1	I.10.2.10 ADF
	FAX *2	I.10.2.11 FAX
	Finisher *3	I.10.2.12 Finisher
	Network Settings	I.10.2.13 Network Settings
	Machine Update Setting	I.10.2.14 Machine Update Setting

- *1: It will be displayed only when the optional automatic document feeder DF-701 or DF-624 is mounted.
- *2: It will be displayed only when the optional fax kit FK-511 is mounted.
- *3: It will be displayed only when the optional finisher FS-533 or FS-534 is mounted.

10.2 List of service mode (detail)

10.2.1 Machine

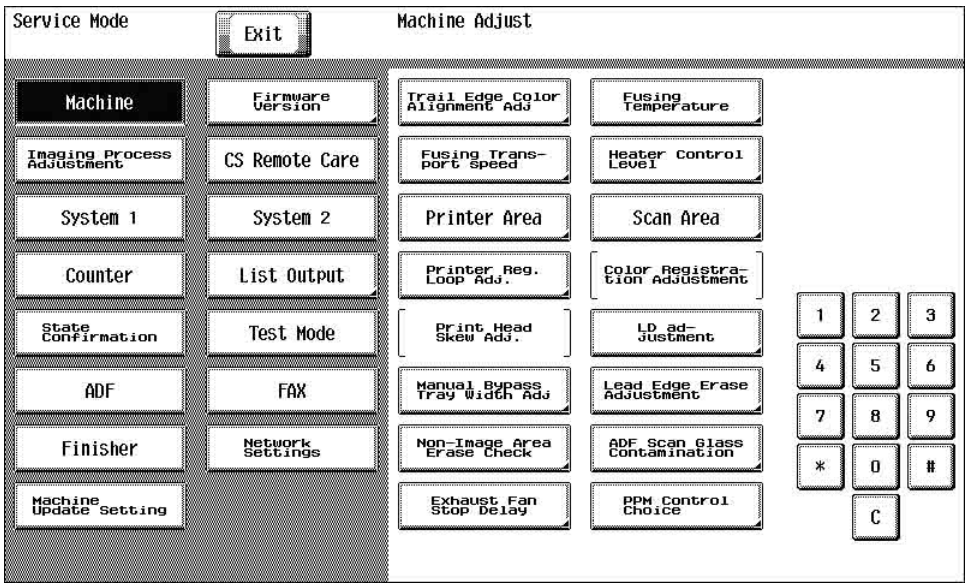

NOTE

- **After exiting Service Mode, you must turn OFF the main power switch. Turning ON the main power switch again after waiting 10 seconds makes the changes to the Service Mode setting take effect.**
- **The function tree is shown to comply with the format displayed on the screen.**

Machine		Ref. Page
Trail Edge Color Alignment Adj		I.11.3.1 Trail Edge Color Alignment Adj
Fusing Temperature		I.11.3.2 Fusing Temperature
Fusing Transport Speed		I.11.3.3 Fusing Transport Speed
Heater Control Level		I.11.3.4 Heater Control Level
Printer Area	Leading Edge Adjustment	I.11.3.5.(1) Leading Edge Adjustment
	Printer Image Centering Side 1	I.11.3.5.(2) Printer Image Centering Side 1
	Leading Edge Adj. Side 2 (Duplex)	I.11.3.5.(3) Leading Edge Adj. Side 2 (Duplex)
	Prt. Image Center. Side 2 (Dup)	I.11.3.5.(4) Prt. Image Center. Side 2 (Dup)
	Paper Feed Direction Adj.	I.11.3.5.(5) Paper Feed Direction Adj.
	Tray Printing Position: Tip	I.11.3.5.(6) Tray Printing Position: Tip
Scan Area	Image Position: Leading Edge	I.11.3.6.(1) Image Position: Leading Edge
	Scanner Image Side Edge	I.11.3.6.(2) Scanner Image Side Edge
	Main Scan Zoom Adj.	I.11.3.6.(3) Main Scan Zoom Adj.
	Sub Scan Zoom Adj.	I.11.3.6.(4) Sub Scan Zoom Adj.
Printer Reg. Loop Adj.		I.11.3.7 Printer Reg. Loop Adj.
Color Registration Adjustment		Not used
Print Head Skew Adj.		Not used
LD adjustment	LD Timing Adj.	I.11.3.10.(1) LD Timing Adj.
	LD 1/2 Balance Adj.	I.11.3.10.(2) LD 1/2 Balance Adj.
	LD Light Width Adjustment	I.11.3.10.(3) LD Light Width Adjustment
Manual Bypass Tray Width Adj		I.11.3.11 Manual Bypass Tray Width Adj
Lead Edge Erase Adjustment		I.11.3.12 Lead Edge Erase Adjustment
Non-Image Area Erase Check		I.11.3.13 Non-Image Area Erase Check
ADF Scan Glass Contamination		I.11.3.14 ADF Scan Glass Contamination
Exhaust Fan Stop Delay		I.11.3.15 Exhaust Fan Stop Delay
PPM Control Choice		I.11.3.16 PPM Control Choice

10.2.2 Imaging Process Adjustment

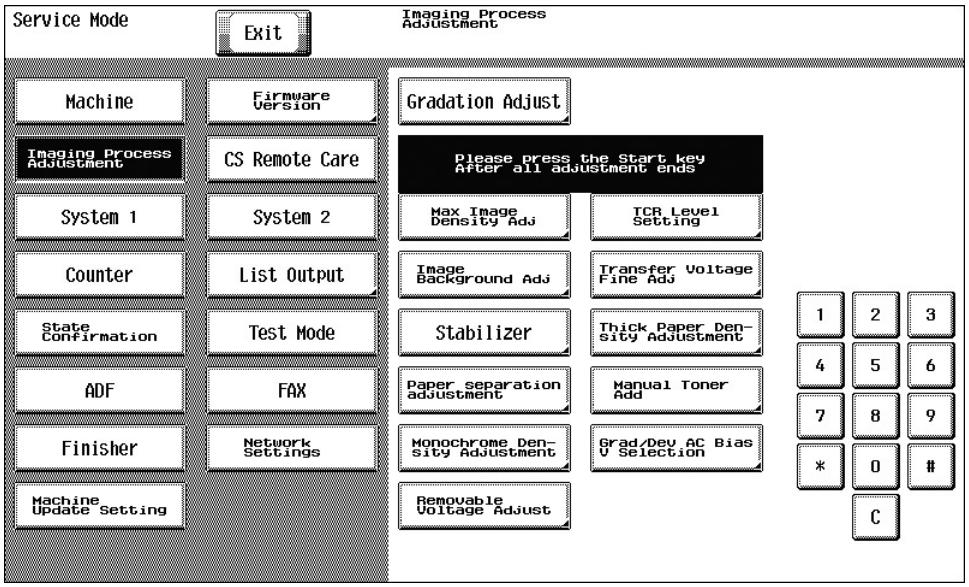

NOTE

- **After exiting Service Mode, you must turn OFF the main power switch. Turning ON the main power switch again after waiting 10 seconds makes the changes to the Service Mode setting take effect.**
- **The function tree is shown to comply with the format displayed on the screen.**

Imaging Process Adjustment		Ref. Page
Gradation Adjust		I.11.5.1 Gradation Adjust
Max Image Density Adj	Copy	I.11.5.2 Max Image Density Adj
	Printer	
TCR Level Setting		I.11.5.3 TCR Level Setting
Image Background Adj		I.11.5.4 Image Background Adj
Transfer Voltage Fine Adj	Primary transfer adj.	I.11.5.5.(1) Primary transfer adj.
	2nd Transfer Adj.	I.11.5.5.(2) 2nd Transfer Adj
Stabilizer	Stabilization Only	I.11.5.6.(1) Stabilization Only
	Initialize+Image Stabilization	I.11.5.6.(2) Initialize+Image Stabilization
Thick Paper Density Adjustment	Thick Type1	I.11.5.7 Thick Paper Density Adjustment
	Thick Type2	
Paper separation adjustment		I.11.5.8 Paper separation adjustment
Manual Toner Add	Manual Toner Add	I.11.5.9 Manual Toner Add
	Hopper Toner Filling	
Monochrome Density Adjustment		I.11.5.10 Monochrome Density Adjustment
Grad/Dev AC Bias V Selection		I.11.5.11 Grad/Dev AC Bias V Selection
Removable Voltage Adjust		I.11.5.12 Removable Voltage Adjust

10.2.3 CS Remote Care

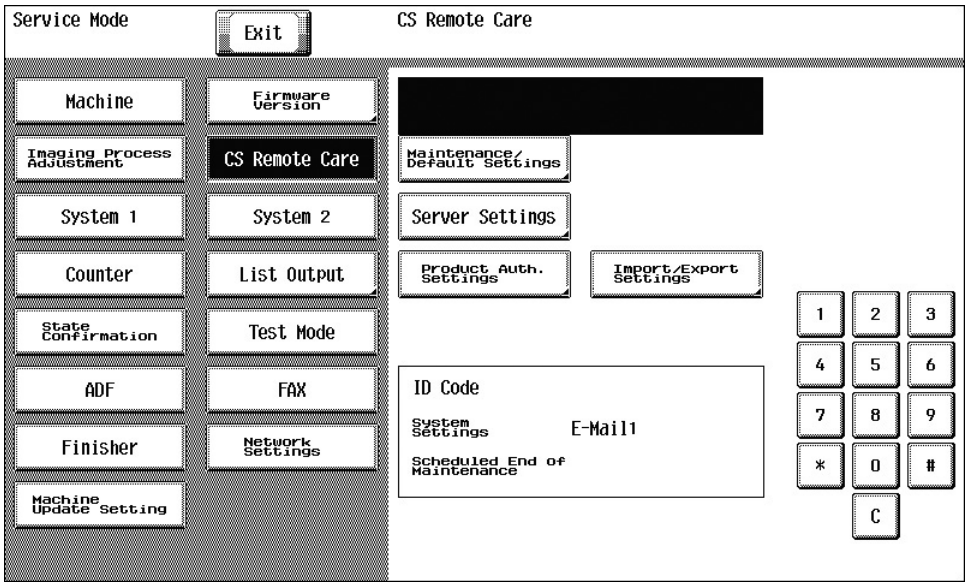

NOTE

- **After exiting Service Mode, you must turn OFF the main power switch. Turning ON the main power switch again after waiting 10 seconds makes the changes to the Service Mode setting take effect.**

CS Remote Care	Ref. Page
Maintenance / Default Settings	I.11.13.1 Maintenance/Default Settings - System Selection
Maintenance Start	-
Maintenance Complete	-
Detail Setting	I.11.13.3 Maintenance/Default Settings - Detail Setting
Server Settings	I.11.13.4 Maintenance/Default Settings - Server Setting (E-Mail1 or E-mail2 is selected.) I.11.13.5 Maintenance/Default Settings - Server Setting (http1 or http2 is selected)
Product Auth. Settings	I.11.13.6 Product Auth. Settings
Import/Export Settings	I.11.13.7 Import/Export Settings

(1) Setting up the CS Remote Care

NOTE

- **The function tree is shown to comply with the format displayed on the screen.**

CS Remote Care		Ref. Page
Using the telephone line modem		I.11.7.1 Using the telephone line modem
Using the fax line modem		I.11.7.2 Using the Fax line modem
Using the E-mail		I.11.7.3 Using E-mail
When using a WebDAV server in http communication	http (bilateral communication)	I.11.7.4.(1) Bilateral communication
	http (unilateral communication: Device to Center)	I.11.7.4.(2) Unilateral communication: Device to Center

(2) List of software SW for CS Remote Care

SW No.	Functions		Ref. Page
01	Communication settings	Dial Mode	I.11.8.3 SW No. 01
		Line for send only	
		Baud rate	
02	Auto call	Emergency transmission	I.11.8.4 SW No. 02
		Date specified transmission	
		Call parts replace date	
		Call drum replace date	
		Call regular service date (PM)	
		Auto call on the Drum Unit Life	
		Auto call of the IR shortage	
		Auto call on the zero reset of the fixed parts replacement	
03	Trouble display setting	Trouble display setting	I.11.8.5 SW No. 03
		Auto call on the toner empty	
		Auto call on the waste toner bottle full	
04	CS Remote Care communication mode		I.11.8.6 SW No. 04
05	Modem redial interval		I.11.8.7 SW No. 05
06	Modem redial times		I.11.8.8 SW No. 06
07	Redial for response time out		I.11.8.9 SW No. 07
08	Retransmission interval on E-Mail/http delivery error		I.11.8.10 SW No. 08
09	Retransmission times on E-Mail/http delivery error		I.11.8.11 SW No. 09
10	Time zone settings		I.11.8.12 SW No. 10
11	Timer 1	RING reception -> CONNECT reception	I.11.8.13 SW No. 11
12	Timer 2	Dial request completed -> CONNECT reception	I.11.8.14 SW No. 12
13	Reservation		-
14	Timer 4	Line connection -> Start request telegram delivery	I.11.8.15 SW No. 14
15	Timer 5	Wait time for other side's response	I.11.8.16 SW No. 15
16	Reservation		-
17	Reservation		-
18	Attention display	To set whether to give the alarm display when using the modem but the power for the modem is OFF.	I.11.8.17 SW No. 18
19	Reservation		-

SW No.	Functions		Ref. Page
20	Reservation		-
21	Transmission of misfeed frequent occurrence warning	Transmission of paperbased misfeed frequent occurrence warning	I.11.8.18 SW No. 21
		Transmission of originalbased misfeed frequent occurrence warning	
		Automatic transmission of chronological misfeed data at the time of transmission of misfeed frequent occurrence warning	
22	Misfeed frequent occurrence threshold value	Paper-based misfeed frequent occurrence threshold value	I.11.8.19 SW No. 22
23		Original-based misfeed frequent occurrence threshold value	I.11.8.20 SW No. 23
24 to 40	Reservation		-

10.2.4 System 1

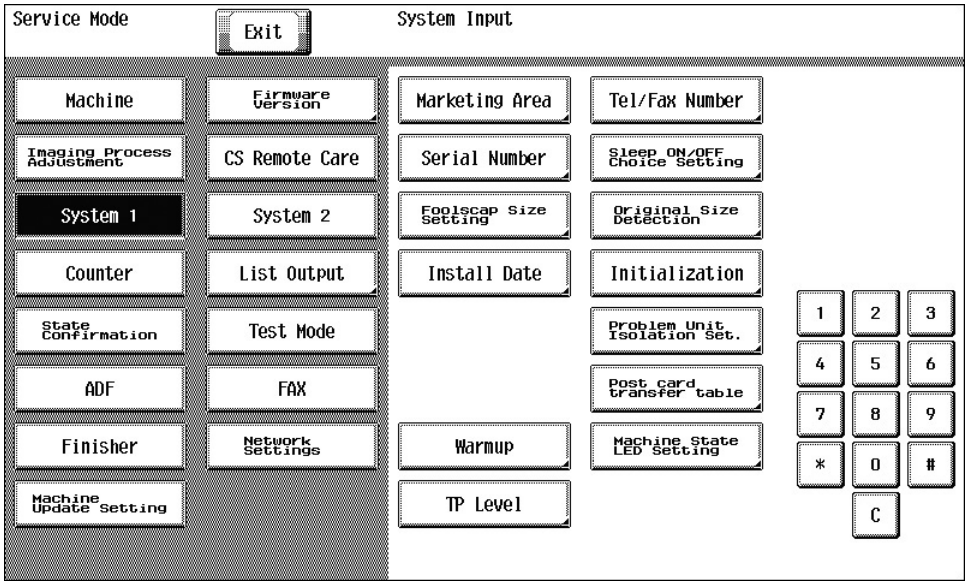

NOTE

- **After exiting Service Mode, you must turn OFF the main power switch. Turning ON the main power switch again after waiting 10 seconds makes the changes to the Service Mode setting take effect.**
- **The function tree is shown to comply with the format displayed on the screen.**

System 1			Ref. Page
Marketing Area			I.11.14.1 Marketing Area
Tel/Fax Number			I.11.14.2 Tel/Fax Number
Serial Number			I.11.14.3 Serial Number
Sleep ON/OFF Choice Setting			I.11.14.4 Sleep ON/OFF Choice Setting
Foolscap Size Setting			I.11.14.5 Foolscap Size Setting
Original Size Detection			I.11.14.6 Original Size Detection
Install Date			I.11.14.7 Install Date
Initialization	Clear All Data		I.11.14.8 Initialization-Clear All Data
	Clear Individual Data	Copy Program Data	I.11.14.9.(1) Copy Program Data
		Address Registration Data	I.11.14.9.(2) Address Registration Data
		Fax Setting Data	I.11.14.9.(3) Fax Setting Data
		All History Data	I.11.14.9.(4) All History Data
		Network Setting Data	I.11.14.9.(5) Network Setting Data
		Server Cache Data	I.11.14.9.(6) Server Cache Data
	System Error Clear		I.11.14.10 Initialization-System Error Clear
Problem Unit Isolation Set.			I.11.14.11 Problem Unit Isolation Set.
Post card transfer table			I.11.14.12 Post card transfer table
Warmup			I.11.14.13 Warmup
Machine State LED Setting			I.11.14.14 Machine State LED Setting
TP Level			I.11.14.15 TP Level

10.2.5 System 2

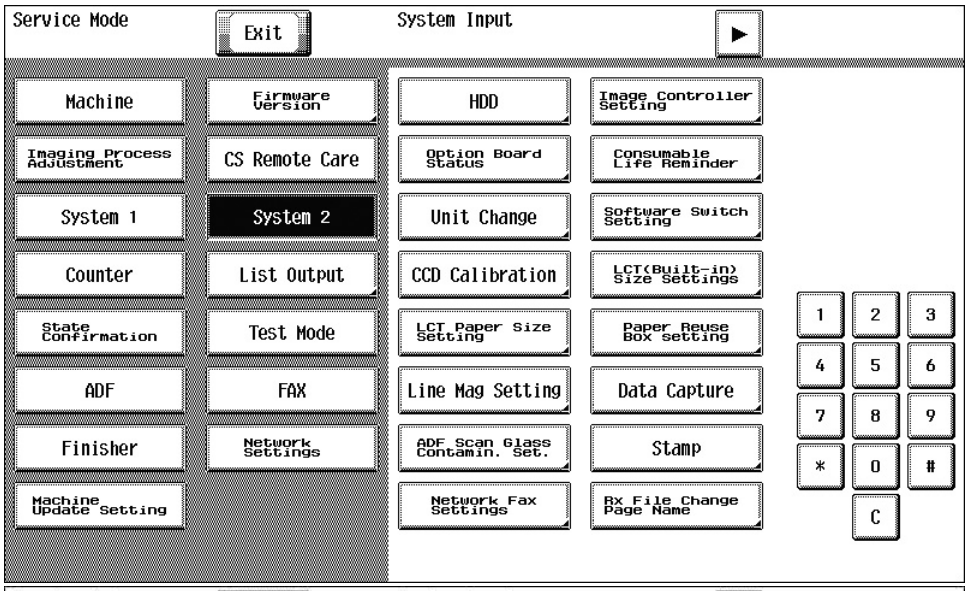

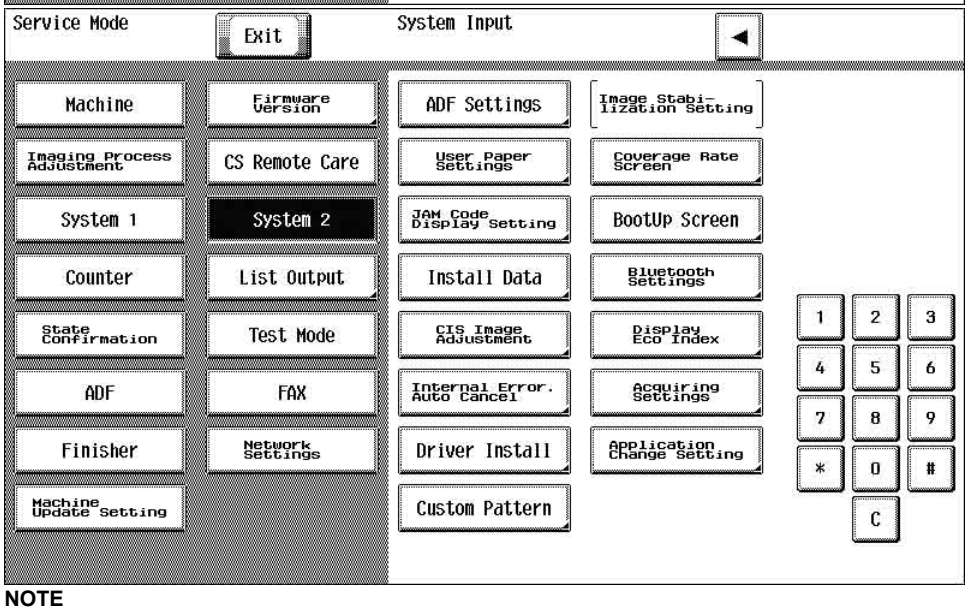

NOTE

- **After exiting Service Mode, you must turn OFF the main power switch. Turning ON the main power switch again after waiting 10 seconds makes the changes to the Service Mode setting take effect.**
- **The function tree is shown to comply with the format displayed on the screen.**

System 2	Ref. Page
HDD	I.11.15.1 HDD
Image Controller Setting	I.11.15.2 Image Controller Setting
Option Board Status	I.11.15.3 Option Board Status
Consumable Life Reminder	I.11.15.4 Consumable Life Reminder
Unit Change	I.11.15.5 Unit Change
Software Switch Setting	I.11.15.6 Software Switch Setting
CCD Calibration	I.11.15.7 CCD Calibration
LCT (Built-in) Size Settings	I.11.15.8 LCT (Built-in) Size Settings
LCT Paper Size Setting	I.11.15.9 LCT Paper Size Setting
Paper Reuse Box Setting	I.11.15.10 Paper Reuse Box Setting
Line Mag Setting	I.11.15.11 Line Mag Setting
Data Capture	I.11.15.12 Data Capture
ADF Scan Glass Contamin. Set.	I.11.15.13 ADF Scan Glass Contamin. Set.
Stamp	I.11.15.14 Stamp
Network Fax Settings	I.11.15.15 Network Fax Settings
RX File Change Page Name	I.11.15.16 RX File Change Page Name
ADF Settings	I.11.15.17 ADF Settings
Image Stabilization Setting	Not used
User Paper Settings	I.11.15.19 User Paper Settings

System 2	Ref. Page
Coverage Rate Screen	I.11.15.20 Coverage Rate Screen
JAM Code Display Setting	I.11.15.21 JAM Code Display Setting
BootUp Screen	I.11.15.22 BootUp Screen
Install Data	I.11.15.23 Install Data
Bluetooth Settings	I.11.15.24 Bluetooth Settings
CIS Image Adjustment *1	I.11.15.25 CIS Image Adjustment
Display Eco Index	I.11.15.26 Display Eco Index
Internal Error. Auto Cancel	I.11.15.27 Internal Error. Auto Cancel
Acquiring Settings	I.11.15.28 Acquiring Settings
Driver Install	I.11.15.29 Driver Install
Application Change Setting	I.11.15.30 Application Change Setting
Custom Pattern *2	I.11.15.31 Custom Pattern

- *1: It will be displayed only when the optional automatic document feeder DF-701 is mounted.
- *2: Will be available in the near future (The “Panel customization tool” will be released in the near future)

10.2.6 Counter

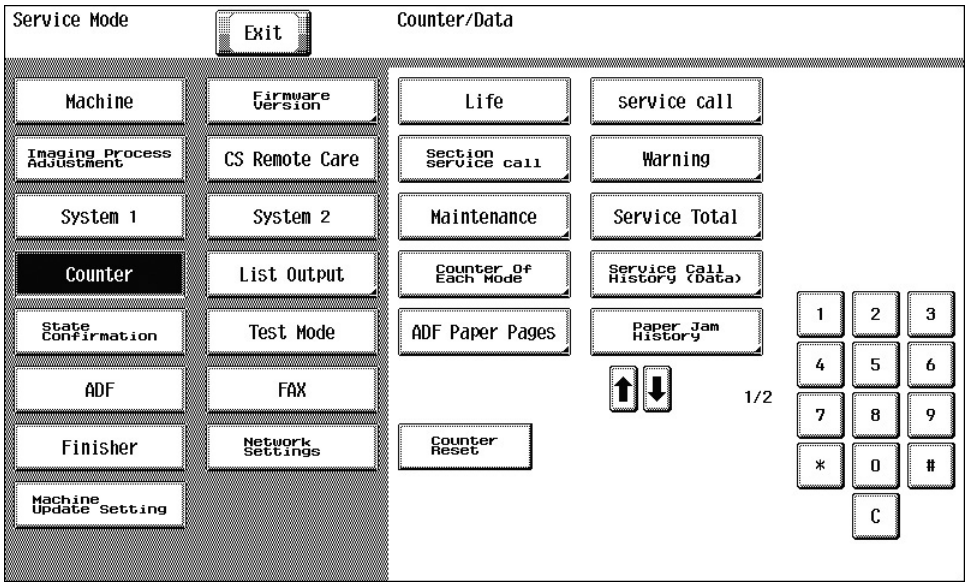

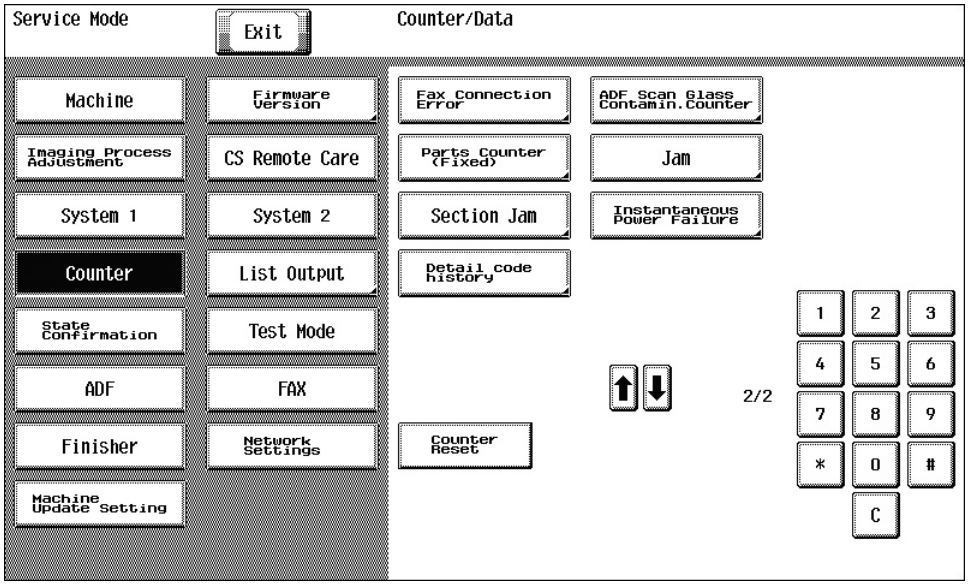

NOTE

- **After exiting Service Mode, you must turn OFF the main power switch. Turning ON the main power switch again after waiting 10 seconds makes the changes to the Service Mode setting take effect.**
- **The function tree is shown to comply with the format displayed on the screen.**

Counter	Ref. Page
Life	I.11.16.2 Life
Service Call	I.11.16.3 Service Call
Section Service Call	I.11.16.4 Section Service Call
Warning	I.11.16.5 Warning

Counter	Ref. Page
Maintenance	I.11.16.6 Maintenance
Service Total	I.11.16.7 Service Total
Counter Of Each Mode	I.11.16.8 Counter of Each Mode
Service Call History (Data)	I.11.16.9 Service Call History (Data)
ADF Paper Pages	I.11.16.10 ADF Paper Pages
Paper Jam History	I.11.16.11 Paper Jam History
Fax Connection Error	I.11.16.12 Fax Connection Error
ADF Scan Glass Contamin. Counter	I.11.16.13 ADF Scan Glass Contamin. Counter
Parts Counter (Fixed) *1	I.11.16.14 Parts Counter (Fixed)
Jam	I.11.16.15 Jam
Section JAM	I.11.16.16 Section JAM
Instantaneous Power Failure	I.11.16.17 Instantaneous Power Failure
Detail code history	I.11.16.18 Detail code history
Counter Reset	-

*1: It will be displayed only when the optional finisher FS-533 or FS-534 is mounted.

10.2.7 List Output

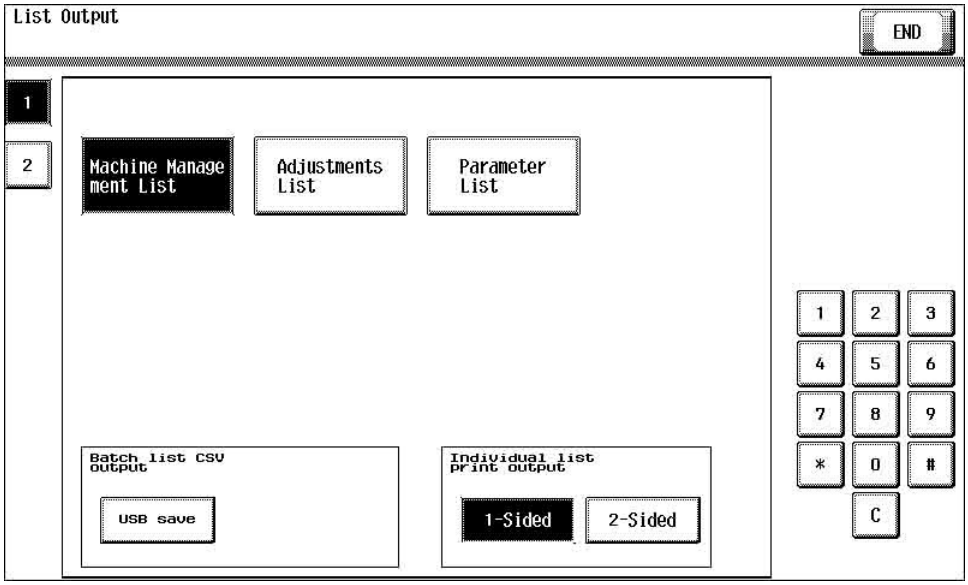

NOTE

- **After exiting Service Mode, you must turn OFF the main power switch. Turning ON the main power switch again after waiting 10 seconds makes the changes to the Service Mode setting take effect.**
- **The function tree is shown to comply with the format displayed on the screen.**

List Output		Ref. Page
Batch list CSV output		I.11.17.1 Batch list CSV output
Individual list print output		-
Machine Management List		I.11.17.2 Machine Management List
Adjustments List		I.11.17.3 Adjustments List
Parameter List		I.11.17.4 Parameter List
Service Parameter		I.11.17.5 Service Parameter
Protocol Trace	Last	I.11.17.6 Protocol Trace
	Error	
Fax Setting List		I.11.17.7 Fax Setting List
Fax Analysis List		I.11.17.8 Fax Analysis List

10.2.8 State Confirmation

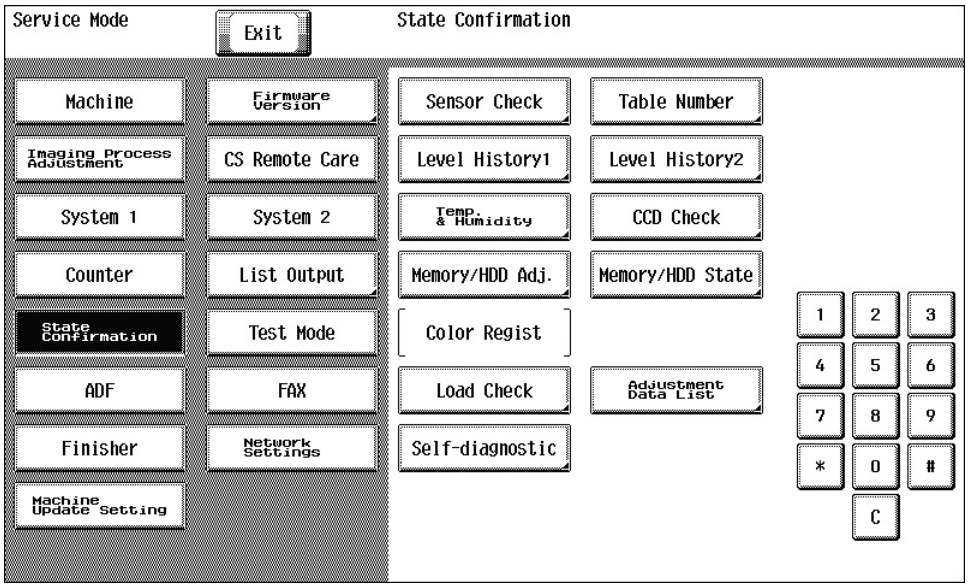

NOTE

- **After exiting Service Mode, you must turn OFF the main power switch. Turning ON the main power switch again after waiting 10 seconds makes the changes to the Service Mode setting take effect.**
- **The function tree is shown to comply with the format displayed on the screen.**

State Confirmation		Ref. Page
Sensor Check		I.11.18.1 Sensor Check
Table Number		I.11.18.2 Table Number
Level History1		I.11.18.3 Level History 1
Level History2		I.11.18.4 Level History 2
Temp. & Humidity		I.11.18.5 Temp. & Humidity
CCD Check		I.11.18.6 CCD Check
Memory/HDD Adj.	Memory Check	I.11.18.7.(1) Memory Check
	Compress / Decompression Check	I.11.18.7.(2) Compress / Decompression Check
	JPEG Check	I.11.18.7.(3) JPEG check
	Memory Bus Check	I.11.18.7.(4) Memory Bus Check
	DSC Bus Check	I.11.18.7.(5) DSC Bus Check
	HDD R/W Check	I.11.18.7.(6) HDD R/W Check
	HDD Format	I.11.18.7.(7) HDD Format
	SSD -> HDD Data Copy	I.11.18.7.(8) SSD -> HDD Data Copy
Memory/HDD State		I.11.18.8 Memory/HDD State
Color Regist		Not used
Load Check		I.11.18.10 Load Check
Adjustment Data List		I.11.18.11 Adjustment Data List
Self-diagnostic		I.11.18.12 Self-diagnostic

10.2.9 Test Mode

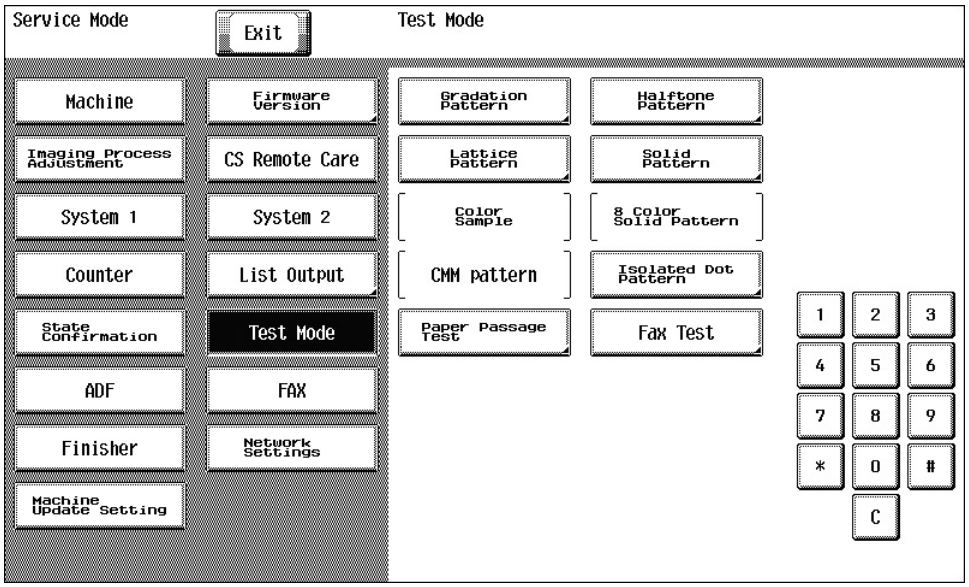

NOTE

- **After exiting Service Mode, you must turn OFF the main power switch. Turning ON the main power switch again after waiting 10 seconds makes the changes to the Service Mode setting take effect.**
- **The function tree is shown to comply with the format displayed on the screen.**

Test Mode	Ref. Page
Gradation Pattern	I.11.19.2 Gradation Pattern
Halftone Pattern	I.11.19.3 Halftone Pattern
Lattice Pattern	I.11.19.4 Lattice Pattern
Solid Pattern	I.11.19.5 Solid Pattern
Color Sample	Not used
8 Color Solid Pattern	Not used
CMM pattern	Not used
Isolated Dot Pattern	I.11.19.9 Isolated Dot Pattern
Paper Passage Test	I.11.19.10 Paper Passage Test
Fax Test *	I.11.19.11 Fax Test-Signal Send Test I.11.19.12 Fax Test-Signal Receive Test I.11.19.13 Fax Test-NCU TEST

- *: It will be displayed only when the optional fax kit FK-511 is mounted.

10.2.10 ADF

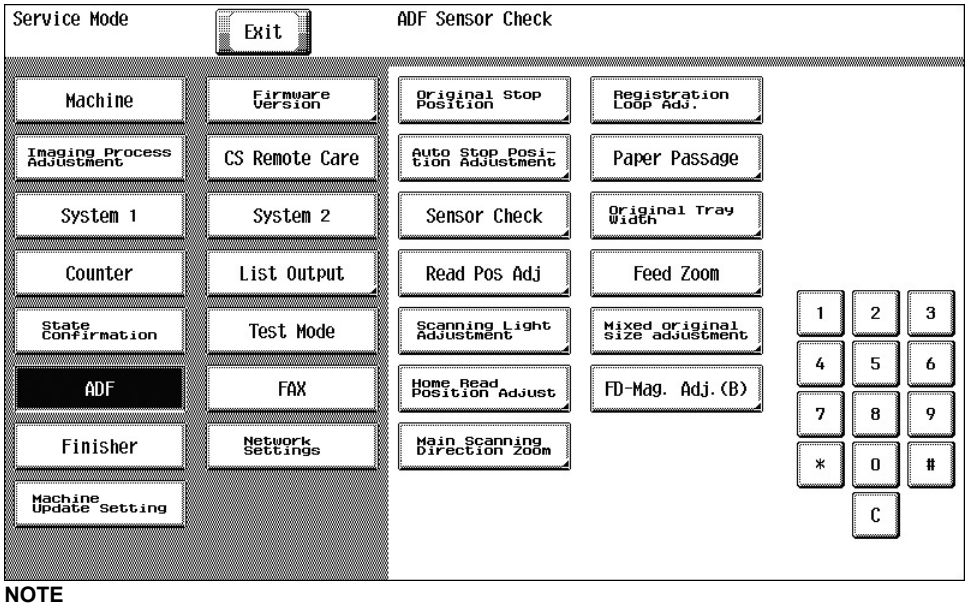

NOTE

- **After exiting Service Mode, you must turn OFF the main power switch. Turning ON the main power switch again after waiting 10 seconds makes the changes to the Service Mode setting take effect.**
- **The function tree is shown to comply with the format displayed on the screen.**

ADF	Ref. Page
Original Stop Position	I.11.20.1 Original Stop Position

ADF		Ref. Page
Registration Loop Adj.		I.11.20.2 Registration Loop Adj.
Auto Stop Position Adjustment		I.11.20.3 Auto Stop Position Adjustment
Paper Passage		I.11.20.4 Paper Passage
Sensor Check		I.11.20.5 Sensor Check
Original Tray Width		I.11.20.6 Original Tray Width
Read Pos Adj		I.11.20.7 Read Pos Adj
Feed Zoom	Orig. Feed Zoom Ad	I.11.20.8 Feed Zoom
	Auto Adjust	
Scanning Light Adjustment		I.11.20.9 Scanning Light Adjustment
Mixed original size adjustment		I.11.20.10 Mixed original size adjustment
Home Read Position Adjust *1		I.11.20.11 Home Read Position Adjust
FD-Mag. Adj. (B)	Orig. Feed Zoom Ad	I.11.20.12 FD-Mag. Adj. (B)
	Auto Adjust	
Main Scanning Direction Zoom *1	Main scanning direction zoom adj *1	I.11.20.13 Main Scanning Direction Zoom
	Auto Adjust *1	

- *1: It will be displayed only when the optional automatic document feeder DF-701 is mounted.

10.2.11 FAX

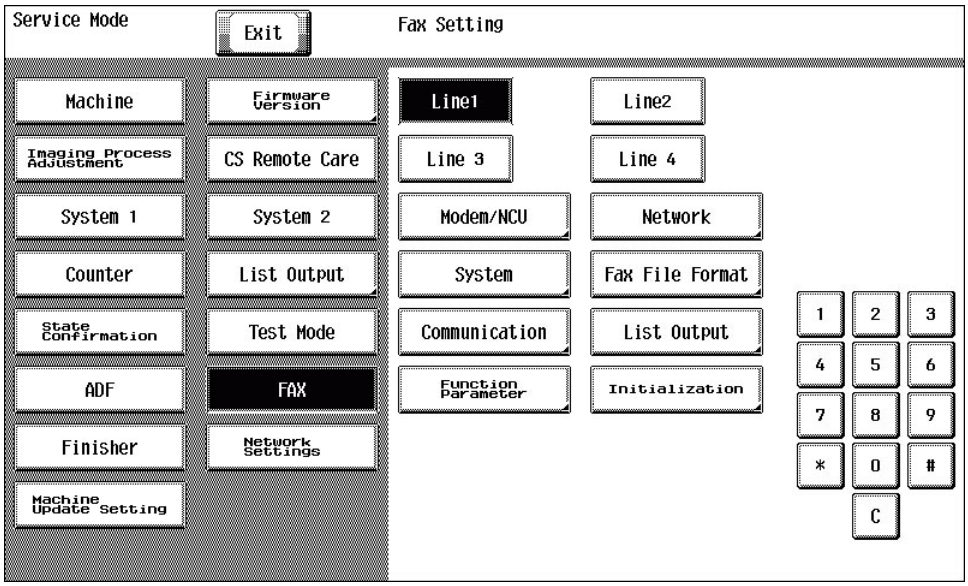

NOTE

- **After exiting Service Mode, you must turn OFF the main power switch. Turning ON the main power switch again after waiting 10 seconds makes the changes to the Service Mode setting take effect.**
- **The function tree is shown to comply with the format displayed on the screen.**

FAX		Ref. Page
Line 1 *1	Modem/NCU *1	I.11.21.1 Modem/NCU
	Network *1	I.11.21.2 Network
	System *1	I.11.21.3 System
	Fax File Format *1	I.11.21.4 Fax File Format
	Communication *1	I.11.21.5 Communication
	List Output *1	I.11.21.6 List Output
	Function Parameter *1	I.11.21.7 Function Parameter
	Initialization *1	I.11.21.8 Initialization
Line 2 *2 Line 3 *3 Line 4 *4	Modem/NCU *2 *3 *4	I.11.22.1 Modem/NCU
	Network *2 *3 *4	I.11.22.2 Network
	Communication *2 *3 *4	I.11.21.5 Communication
	Initialization *2 *3 *4	I.11.22.4 Initialization

- *1: It will be displayed only when the following setting shows that FAX (circuit 1) is set to “Set”.
  [Service Mode] -> [System 2] -> [Option Board Status]
- *2: It will be displayed only when the following setting shows that FAX (circuit 2) is set to “Set”.
  [Service Mode] -> [System 2] -> [Option Board Status]
- *3: It will be displayed only when the following setting shows that FAX (circuit 3) is set to “Set”.
  [Service Mode] -> [System 2] -> [Option Board Status]
- *4: It will be displayed only when the following setting shows that FAX (circuit 4) is set to “Set”.
  [Service Mode] -> [System 2] -> [Option Board Status]

10.2.12 Finisher

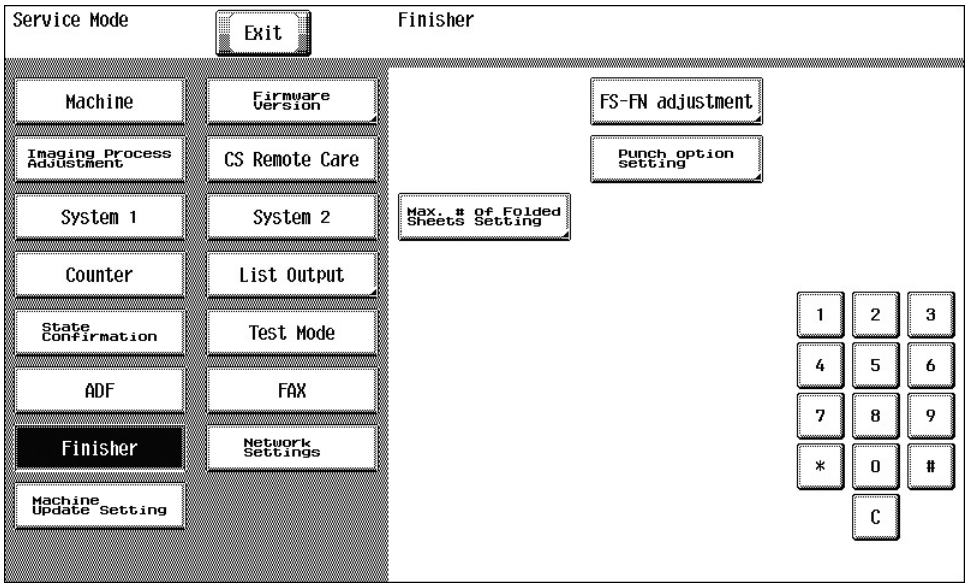

NOTE

- **After exiting Service Mode, you must turn OFF the main power switch. Turning ON the main power switch again after waiting 10 seconds makes the changes to the Service Mode setting take effect.**
- **The function tree is shown to comply with the format displayed on the screen.**

Finisher		Ref. Page
FS-FN adjustment *1	Center Staple Position *2	I.11.28.1 FS-FN adjustment - Center Staple Position (SD-511)
	Half-Fold Position *2	I.11.28.2 FS-FN adjustment - Half-Fold Position (SD-511)
	1st Tri-Fold Adjustment *2	I.11.28.3 FS-FN adjustment - 1st Tri-Fold Adjustment/ 2nd Tri-Fold Adjustment (SD-511)
	2nd Tri-Fold Adjustment *2	
	Punch Edge Adj. *3	I.11.28.4 FS-FN adjustment - Punch Edge Adj (PK-520)
	Punch Regist Loop Size *6	I.11.28.5 FS-FN adjustment - Punch Regist Loop Size (PK-519/PK-520)
	Finisher Components Test Mode *1	I.11.28.6 FS-FN adjustment - Finisher Components Test Mode
	Alignment Plate Position *4	I.11.28.7 FS-FN adjustment - Alignment plate Position (FS-533)
	Paper Alignment Guides W. Adj. *7	I.11.28.8 FS-FN adjustment - Paper Alignment Guides W. Adj. (FS-534)
Punch option setting		I.11.28.9 Punch Option Setting
Max. # of Folded Sheets Setting *2		I.11.28.10 Max. # of Folded Sheets Setting (SD-511)
Job Separator *5		I.11.28.11 Job Separator (JS-506)

- *1: It will be displayed only when the optional finisher FS-533 or FS-534 is mounted.
- *2: It will be displayed only when the optional saddle stitcher SD-511 is mounted.
- *3: It will be displayed only when the optional punch kit PK-520 is mounted.
- *4: It will be displayed only when the optional finisher FS-533 is mounted.
- *5: It will be displayed only when the optional job separator JS-506 is mounted.
- *6: It will be displayed only when the optional punch kit PK-519 or PK-520 is mounted.
- *7: It will be displayed only when the optional finisher FS-534 is mounted.

10.2.13 Network Settings

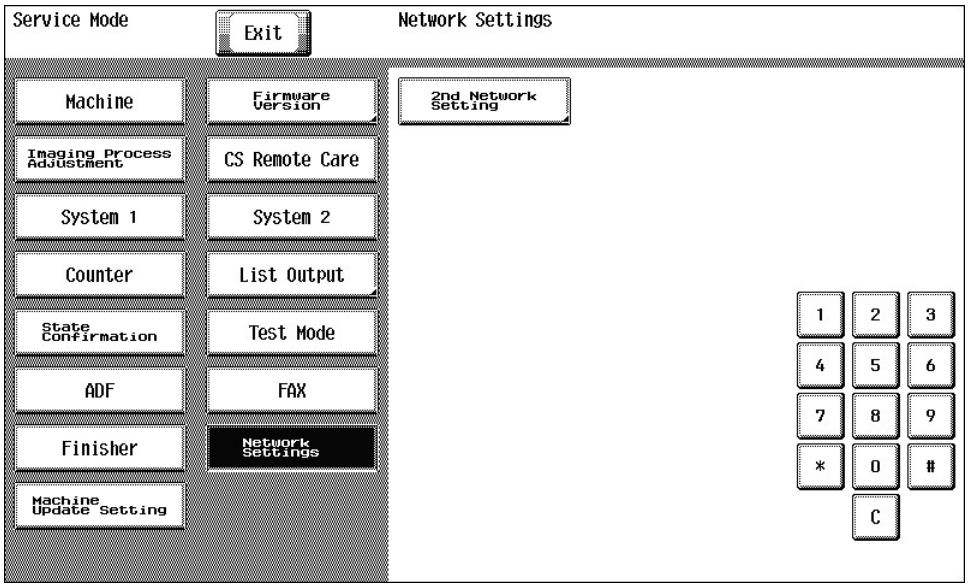

NOTE

- **After exiting Service Mode, you must turn OFF the main power switch. Turning ON the main power switch again after waiting 10 seconds makes the changes to the Service Mode setting take effect.**

Network settings	Ref. Page
2nd Network Setting *1	I.11.29.1 2nd Network Setting - 2nd network card settings

*1: This is displayed only when the optional upgrade kit UK-208 and UK-209 are installed.

10.2.14 Machine Update Setting

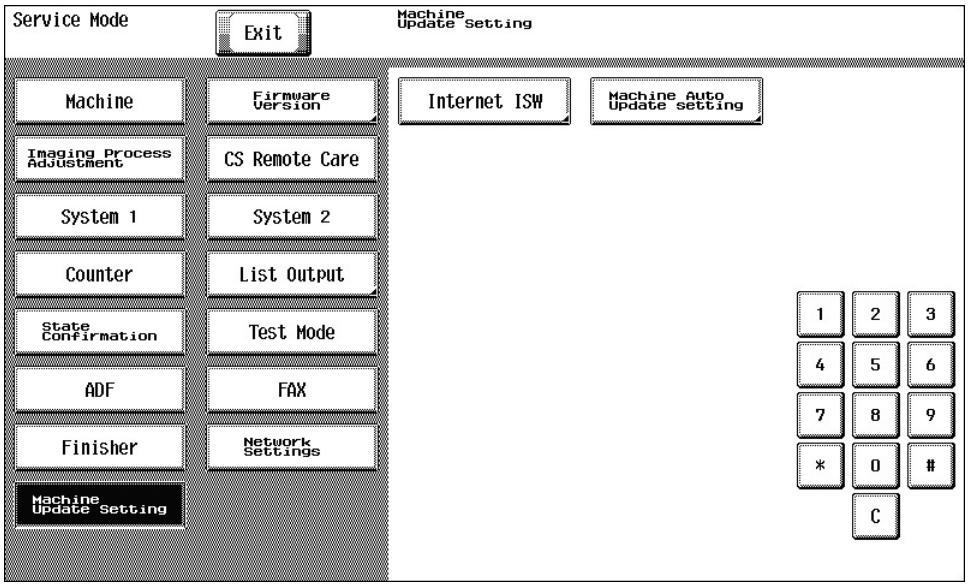

NOTE

- **After exiting Service Mode, you must turn OFF the main power switch. Turning ON the main power switch again after waiting 10 seconds makes the changes to the Service Mode setting take effect.**
- **The function tree is shown to comply with the format displayed on the screen.**

Machine Update Setting			Ref. Page
Internet ISW	Internet ISW Set	Function Setting	I.11.30.1 Internet ISW - Internet ISW Set
		Open Mode Settings	
	HTTP Setting *1		I.11.30.2 Internet ISW - HTTP Setting
	FTP Setting *1		I.11.30.3 Internet ISW - FTP Setting
	Forwarding Access Setting *1		I.11.30.4 Internet ISW - Forwarding Access Setting
	Download *1		I.11.30.5 Internet ISW - Download
	Update Start Time Settings *1		I.11.30.6 Internet ISW - Update Start Time Settings

Machine Update Setting		Ref. Page
Machine Auto Update setting	Auto Update setting	I.11.30.7 Machine Auto Update setting - Auto Update setting
	Relay server setting	I.11.30.8 Machine Auto Update setting - Relay server setting
	Transmission log Update	I.11.30.9 Machine Auto Update setting - Transmission log Update
	Transmission Server Log	I.11.30.10 Machine Auto Update setting - Transmission Server Log
	Update Log Display	I.11.30.11 Machine Auto Update setting - Update Log Display
	Relay Server Log Confirmation	I.11.30.12 Machine Auto Update setting - Relay Server Log Confirmation
	Manually Update	I.11.30.13 Machine Auto Update setting - Manual Update
	Machine Export setting	I.11.30.14 Machine Auto Update setting - Machine Export setting
	Machine Update Password	I.11.30.15 Machine Auto Update setting - Machine Update Password

* 1: To be displayed only when the following setting is set to “ON”. [Machine Update Setting] -> [Internet ISW] -> [Internet ISW set] -> [Function Setting]

11. SERVICE MODE

11.1 Starting/Setting/Exiting

11.1.1 Starting procedure

NOTE

- **Ensure appropriate security for Service Mode function setting procedures. They should NEVER be shown to any unauthorized person not involved with service jobs.**

(1) Procedure

1. Touch Menu.
2. Touch [Counter].
3. Touch [Display Keypad].
4. Press the following keys in this order.; Stop -> 0 -> 0 -> Stop -> 0 -> 1
5. Enter the CE password and touch [END].

   NOTE

   - **When the following setting is set to "ON", CE password authentication is necessary; [Administrator Settings] -> [Security Settings] -> [Enhanced Security Mode].**
   - **If a wrong CE password is entered, re-enter the right password. The machine will not enter Service Mode unless the CE password is entered correctly. To return to the basic screen, turn OFF the main power switch and turn it ON again. When the following setting is set to "Mode 2", operation will be prohibited since it indicates authentication failure by failing to enter the correct CE password within the specified number of times.**
   - **If the access lock is activated, the lock release timer starts to operate by input the Stop -> 0 -> 9 -> 3 -> 1 -> 7 in Menu -> [Counter] -> [Print List] -> [Display Keypad] after the main power switch is turned OFF and On. When the timer reaches the time specified in this setting, the access lock is released.**
   - **The service code entered is displayed as " * "**

6. The Service Mode menu will appear.

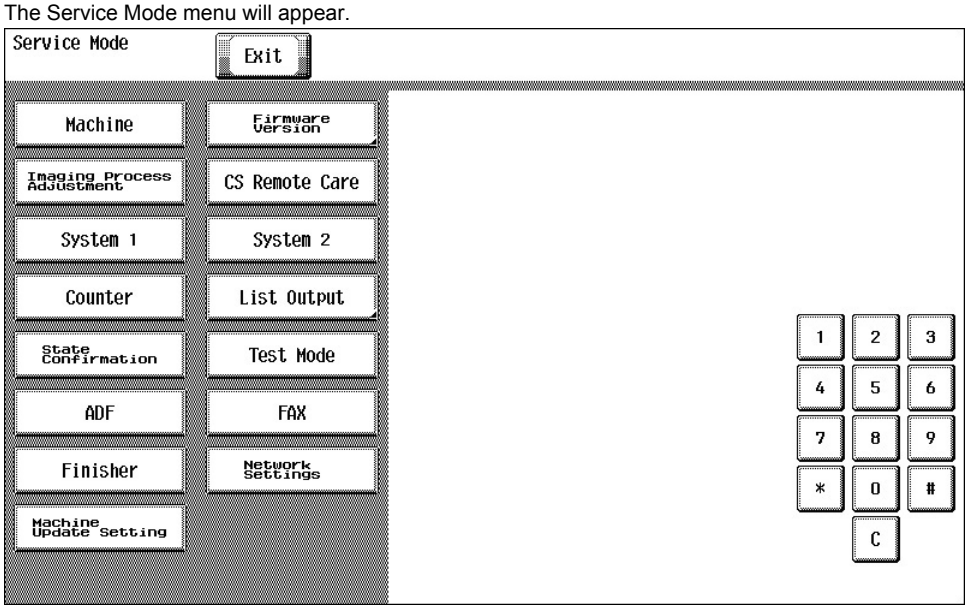

NOTE

- **Be sure to change the CE password from its default value.**
- **For the procedure to change the CE password, see the "I.12.3.1 CE Password."**
- **NEVER forget the CE password.**

11.1.2 Setting procedure

1. Press the key corresponding to the function you would like to change the setting for. Keys or setting screens will appear for each function.

Ex.: System 1

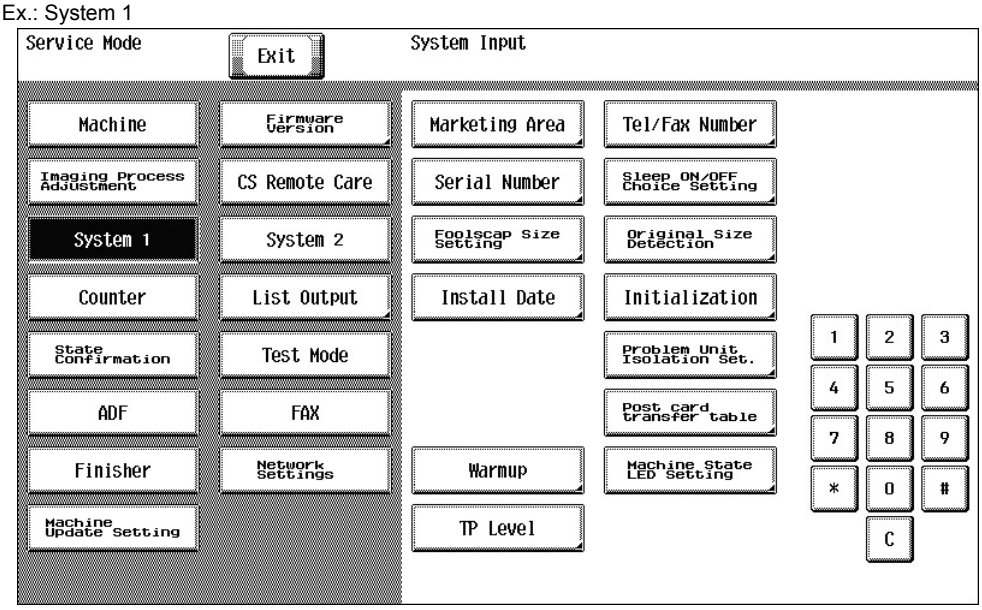

2. Press the key for the item that you would like to change the setting for. Setting screens will appear for each item.
Ex.: Install Date

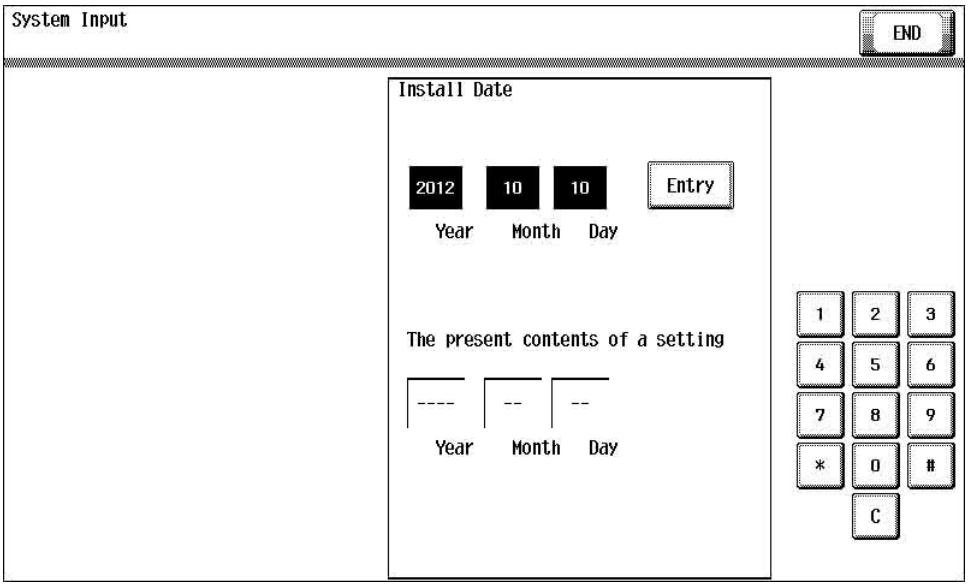

3. Press the key for the setting you would like to change. You can also input the numerical value using the 10-key pad. (the [+]/[-] keys can also be used for settings. Follow the directions on the screen to input numerical values.)
NOTE
- **For more details, see the description pages for each setting item.**
  I.10.1 List of service mode (outline)

4. Touch [END]. This closes the setting screen and returns to the Service Mode screen. (If deep within the hierarchy of the setting screen, it may be necessary to touch [END] several times)
5. Touch [Exit]. This will close the Service Mode screen and exit the Service Mode.
6. Turn OFF the main power switch. After waiting 10 seconds, turn ON the main power switch again. Turning the main power switch OFF and then ON again makes the changes to the Service Mode setting take effect.
NOTE
- **Simply exiting the Service Mode will not make the changed settings take effect. You must turn the main power switch OFF and then ON again.**

11.1.3 Exiting procedure

1. Touch [Exit] on the Service Mode screen.
2. Turn OFF the main power switch. Wait 10 seconds, then turn ON the main power switch again.

11.2 Date/Time Input mode

11.2.1 Use

- This mode is used to set time-of-day and date.

11.2.2 Procedure

1. Call the Service Mode to the screen.

2. Press the following keys in this order.
   - Stop -> 1 -> 1 -> 4 -> 4 -> Clear
3. Enter year, month, day, hour, and minute, in that order, from 10-key pad.
   - Year 4 digits -> Month 2 digits -> Day 2 digits -> Hour 2 digits -> Minute 2 digits

   NOTE
   - **Before entering date and time, touch Clear to delete the present time from the place where data and time is entered.**
   - **When setting the month, day, hour, or minute, enter "0" first if the data one digit.**

4. Make sure that correct figures have been entered and then touch [Entry].
5. Touch [END] to return to the Service Mode.

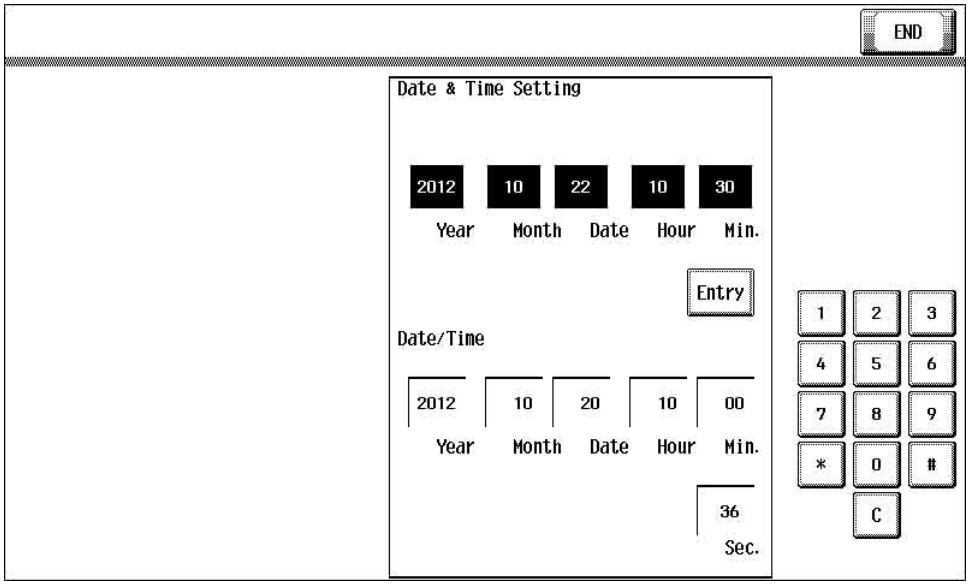

11.3 Machine

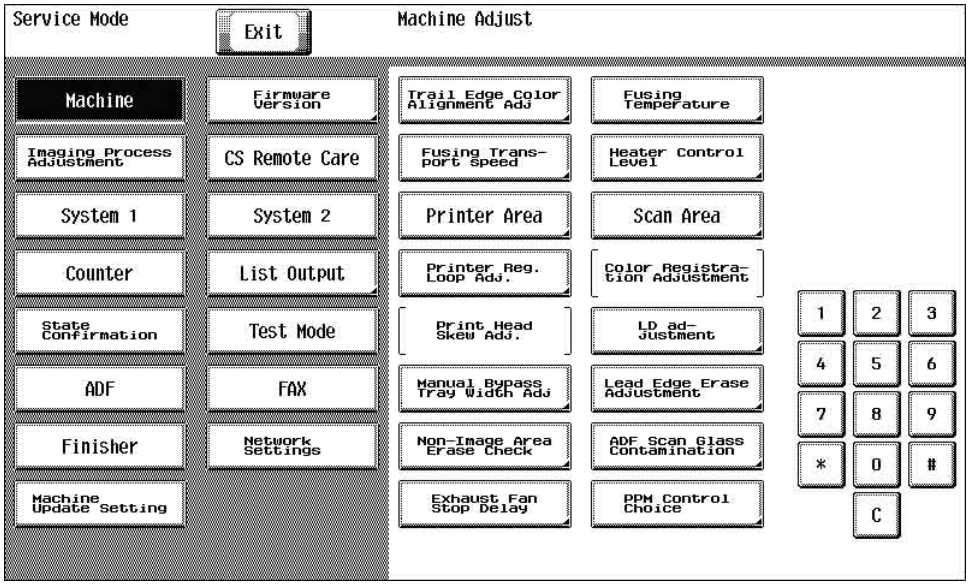

11.3.1 Trail Edge Color Alignment Adj

(1) Use

- To change the conveyance speed by the registration motor and executes fine-tune when an error in zoom ratio is detected at the rear edge of the print image on the thick paper.
- To use when an error in zoom ratio occurs at the image rear edge.
- This can be set for each paper type of normal/thin paper, thick 1/1+, and thick 2/3/4.

(2) Default setting

- 0

(3) Procedure

1. Call the Service Mode to the screen.
2. Touch these keys in this order: [Machine] -> [Trail Edge Color Alignment Adj].
3. Load manual bypass tray with A3/11 x 17 or A4/8 $^{1}/_{2}$ x 11 plain paper.
4. Select the paper type to be adjusted.
5. Press the Start key.

6. Compare the error in zoom ratio at the rear edge side of printed test paper to that at the leading edge side, and conduct the following adjustment if the error occurs at the rear edge side.
7. Using the [+] / [-] key, change the setting value as necessary.
   - Reduce the set value (to reduce the conveyance speed) if the zoom ratio at the rear edge side is larger.
8. Produce another test pattern and make sure that there is no deviation.

Check Procedure

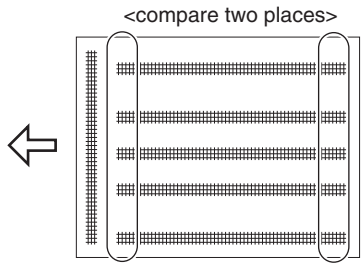

11.3.2 Fusing Temperature

(1) Use

- To adjust individually the temperature of the heating roller for each type of paper, thereby coping with varying fusing performance under changing environmental conditions.
- When fusing performance is poor, or wax streak or offset occurs when the type of paper is changed or environmental conditions change.
- Use when the curling of the paper due to the paper type or environmental change occurred, or when the paper jam, as well as stapling or folding position error occurred due to the curling of the paper.
- By setting the temperature higher (+), gloss of print can be improved.
- By setting the temperature lower (-), exit roller mark can be reduced.

(2) Setting range

Paper type	Setting range	Step
Plain Paper	-20 °C to +10 °C	5 °C
Thin Paper		
OHP Film		
Thick 1		
Thick 1+		
Thick 2		
Thick 3		
Thick 4		
Post.		
Enve.	-5 °C to +5 °C	
Recycled	-20 °C to +10 °C	

(3) Procedure

1. Call the Service Mode to the screen.
2. Touch these keys in this order: [Machine] -> [Fusing Temperature].
3. Select the paper type.
4. Enter the new setting from the [+] / [-] key.
   - If fusing performance is poor, increase the setting.
   - If wax streaks occur, decrease the setting.
   - If offset is poor, decrease the setting.
   - If curling of the paper occurs, decrease the setting.
5. Touch [END] to validate the adjustment value.
6. Return to the basic screen.
7. Output two or three test patterns and check to see whether the image has any problem.
8. Make the adjustment for each type of paper.

11.3.3 Fusing Transport Speed

(1) Use

- To adjust the speed of the fusing motor so as to match the fusing speed with transport speed.
- Brush effect or blurred image is evident as a result of changes in environmental conditions or degraded durability.

(2) Setting range

Paper Type	Setting range	Step
Normal/Thin Paper	-20 to +20	1
Thick 1-4		

(3) Procedure

1. Call the Service Mode to the screen.
2. Touch these keys in this order: [Machine] -> [Fusing Transport Speed].
3. Enter the new setting from the 10-key pad.
   - If brush effect is evident, vary the setting value and check for image.
   - If a blurred image occurs, decrease the setting.
4. Touch [END] to validate the adjustment value.
5. Check the print image for any image problem.

11.3.4 Heater Control Level

(1) Use

- It switches the control level of the fusing unit phase to control the flicker when turning on/off the fusing heater.

(2) Default setting

- Level 2 or Level 3 (The default setting varies depending on the marketing area.)

(3) Setting range

- Level 1 to Level 4 (Step: 1)

(4) Procedure

1. Call the Service Mode to the screen.
2. Touch [Machine] -> [Heater Control Level].
3. Enter the new setting from the [+] / [-] key.
   - When the fluorescent light flickers: Turn down the level. (Example: Level 2 -> Level 1)
   - When there is a noise at power source system such as DC power supply: Turn up the level. (Example: Level 2 -> Level 3 -> Level 4)

11.3.5 Printer Area

(1) Leading Edge Adjustment

(a) Use

- To vary the print start position in the sub scan direction for each of different paper types. (to adjust the timing where paper is sent out from the registration roller)
- The PH unit has been replaced.
- The paper type has been changed.
- The print image deviates in the sub scan direction.
- A faint image occurs on the leading edge of the image.
- This setting can be made independently for plain paper, thin paper, thick 1/1+, thick 2, thick 3, thick 4, OHP film, and envelopes.

(b) Setting range

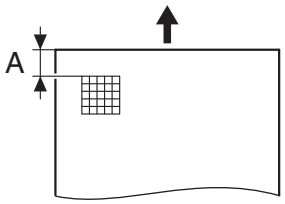

- Width A on the test pattern produced should fall within the following target.

Target	4.2 mm ± 1.0 mm
Setting range	-3.0 mm to +3.0 mm (in 0.2 mm increments)

(c) Procedure

1. Place A3 paper on the manual bypass tray.
2. Call the Service Mode to the screen.
3. Touch [Machine] -> [Printer Area] -> [Leading Edge Adjustment].
4. Select [Plain Paper].
5. Press the Start key to let the machine produce a test pattern.
6. Check the dimension of width A on the test pattern.
7. If width A falls outside the target, change the setting using the [+] / [-] key.
   - If width A is longer than the target, make the setting value smaller than the current one.
   - If width A is shorter than the target, make the setting value greater than the current one.
8. Press the Start key to let the machine produce a test pattern.
9. Check the dimension of width A on the test pattern.
10. If width A is outside the target, change the setting again and make a check again.
11. If width A falls within the target, touch [END].
12. Following the same procedure, adjust for thin paper, thick 1 to 3, OHP film, and envelope.

(2) Printer Image Centering Side 1

(a) Use

- To vary the print start position in the main scan direction for each paper source.

- The PH unit has been replaced.
- A paper feed unit has been added.
- The print image deviates in the main scan direction.

(b) Setting range

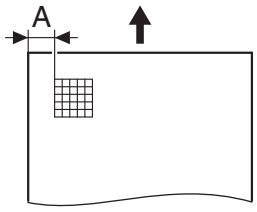

- Width A on the test pattern produced should fall within the following target.

Target	3.0 mm ± 1.0 mm
Setting range	-3.0 mm to +3.0 mm (in 0.2 mm increments)

(c) Procedure

1. Call the Service Mode to the screen.
2. Touch [Machine] -> [Printer Area] -> [Printer Image Centering Side 1].
3. Select the paper source to be adjusted.
4. Press the Start key to let the machine produce a test pattern.
5. Check the dimension of width A on the test pattern.
6. If width A falls outside the target, change the setting using the [+] / [-] key.
   - If width A is longer than the target, make the setting value smaller than the current one.
   - If width A is shorter than the target, make the setting value greater than the current one.
7. Press the Start key to let the machine produce a test pattern.
8. Check the dimension of width A on the test pattern.
9. If width A is outside the target, change the setting again and make a check again.
10. If width A falls within the target, touch [END].
11. Following the same procedure, adjust for all other paper sources. (Use A4 or 8 $^{1}/_{2}$ x 11 plain paper for the bypass.)

(3) Leading Edge Adj. Side 2 (Duplex)

(a) Use

- For individual types of paper, this function allows the adjustment of the image write start position in the sub scan direction on the 2nd side of duplex printing.
- This adjustment is made when the image on the 2nd side of paper deviates from the original position in the sub scan direction.
- This adjustment can be made independently for each of plain paper, thin paper, thick paper 1/1+, thick paper 2, and thick paper 3.

(b) Setting range

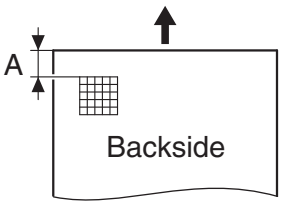

- Width A on the test pattern produced should fall within the following target.
- For measurement, use the image produced on the backside of the test pattern.

Target	4.2 mm ± 1.0 mm
Setting range	-3.0 mm to +3.0 mm (in 0.2 mm increments)

(c) Procedure

1. Place A3 paper on the manual bypass tray.
2. Call the Service Mode to the screen.
3. Touch [Machine] -> [Printer Area] -> [Leading Edge Adj. Side 2 (Duplex)].
4. Select [Plain Paper].
5. Press the Start key to let the machine produce a test pattern.
6. Check the dimension of width A on the test pattern.
7. If width A falls outside the target, change the setting using the [+] / [-] key.
   - If width A is longer than the target, make the setting value smaller than the current one.
   - If width A is shorter than the target, make the setting value greater than the current one.
8. Press the Start key to let the machine produce a test pattern.
9. Check the dimension of width A on the test pattern.
10. If width A is outside the target, change the setting again and make a check again.
11. If width A falls within the target, touch [END].
12. Following the same procedure, adjust for thin paper and thick paper.

(4) Prt. Image Center. Side 2 (Dup)

(a) Use

- To vary the print start position in the main scan direction for each paper source in the 2-Sided mode.
- The image on the backside of the 2-sided copy deviates in the main scan direction.

(b) Setting range

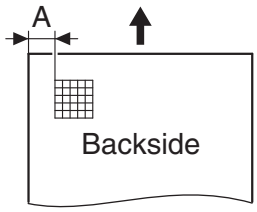

- Width A on the test pattern produced should fall within the following target.
- For measurement, use the image produced on the backside of the test pattern.

Target	3.0 mm ± 1.0 mm
Setting range	-3.0 mm to +3.0 mm (in 0.2 mm increments)

(c) Procedure

1. Call the Service Mode to the screen.
2. Touch [Machine] -> [Printer Area] -> [Prt. Image Center. Side 2 (Dup)].
3. Select the paper source to be adjusted.
4. Press the Start key to let the machine produce a test pattern.
5. Check the dimension of width A on the test pattern.
6. If width A falls outside the target, change the setting using the [+] / [-] key.
   - If width A is longer than the target, make the setting value smaller than the current one.
   - If width A is shorter than the target, make the setting value greater than the current one.
7. Press the Start key to let the machine produce a test pattern.
8. Check the dimension of width A on the test pattern on the backside of the copy.
9. If width A is outside the target, change the setting again and make a check again.
10. If width A falls within the target, touch [END].
11. Following the same procedure, adjust for all other paper sources. (Use A4 or 8 $^{1}/_{2}$ x 11 plain paper for the manual bypass tray.)

(5) Paper Feed Direction Adj.

(a) Use

- To synchronize the paper transport speed with the image writing speed.
- [Sub Scan Zoom Adj.] becomes necessary.
- The print image on the copy distorts (stretched, shrunk).
- When the print image on the copy is stretched in the sub scan direction.
- This setting can be made independently for normal/thin paper, thick 1/1+, thick 2, thick 3, and thick 4.

(b) Setting range

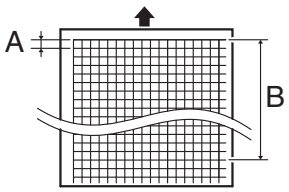

- Width A and width B on the test pattern produced should fall within the following target.
  NOTE
  - **Width A: equivalent to one grid**
  - **Width B: equivalent to 48 grids**

Target	A: 8.13 ± 0.2 mm
	B: 390.14 ± 2.0 mm
Setting range	A: -7 to +7
	B: -7 to +7

(c) Procedure

1. Load manual bypass tray with A3 or 11 x 17 plain paper.
2. Call the Service Mode to the screen.
3. Touch [Machine] -> [Printer Area] -> [Paper Feed Direction Adj.].
4. Select [Normal/Thin Paper].
5. Press the Start key to let the machine produce a test pattern.
6. Check width A (equivalent to one grid) and width B (equivalent to 48 grids) on the test pattern.
7. Touch these keys in this order: [Machine] -> [Printer Area] -> [Paper Feed Direction Adj].
8. If width of A or B falls outside the target, change the setting using the [+] / [-] keys.

- If width A or B is longer than the target, make the setting value smaller than the current one.
- If width A or B is shorter than the target, make the setting value greater than the current one.

9. Press the Start key to let the machine produce a test pattern again.
10. Check width A and width B on the test pattern.
11. If width A or B falls outside the target, change the setting value and make a check again.
12. If width A or B falls within the target, touch [END].
13. Following the same procedure, adjust for thick paper.

(6) Tray Printing Position: Tip

(a) Use

- To change and adjust image printing position at vertical scanning direction by each feed. (to adjust the timing starting from the roller connection up to start of transfer output). It is not applicable in case the job is fed at re-feed.
- To be used when [Printer Area-Leading Edge Adjustment] is not enough for full adjustment (as such case that image printing position gets deviated due to pattern of each feed.)
- Setting is available according to feed of 1st. Short (the length of paper at vertical scanning direction is under 276.4 mm), 1st. Long (the length of paper at vertical scanning direction is over 276.4 mm), 2nd, 3rd, 4th and Manual.
- Adjustment is made for plain paper.

(b) Setting range

NOTE

- **[Printer Area-Leading Edge Adjustment] should be made within target.**
- **Image printing position at vertical scanning direction is adjusted based on the combination value of this setting figure and [Printer Area-Leading Edge Adjustment] figure. In case the value is larger than +3.0mm or less than -3.0mm, the figure should be rounded to 3.0mm or -3.0mm.**

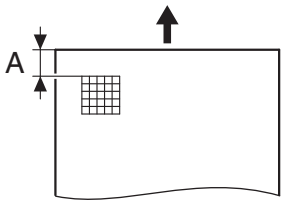

- Width A on the test pattern produced should fall within the following target.

Target	4.2 mm ± 1.0 mm
Setting range	-3.0 mm to +3.0 mm (in 0.2 mm increments)

(c) Procedure

1. Call the Service Mode to the screen.
2. Touch [Machine] -> [Printer Area] -> [Tray Printing Position: Tip].
3. Set plain paper to the targeted tray, and select the feed tray.
4. Press the Start key to let the machine produce a test pattern.
5. Check the dimension of width A on the test pattern.
6. If width A falls outside the target, change the setting using the [+] / [-] key.
   - If width A is longer than the target, make the setting value smaller than the current one.
   - If width A is shorter than the target, make the setting value greater than the current one.
7. Press the Start key to let the machine produce a test pattern.
8. Check the dimension of width A on the test pattern.
9. If width A is outside the target, change the setting again and make a check again.
10. If width A falls within the target, touch [END].

11.3.6 Scan Area

- Use the following test chart for the adjustment of the scanner section.
- If the test chart is not available, a scale may be used instead.

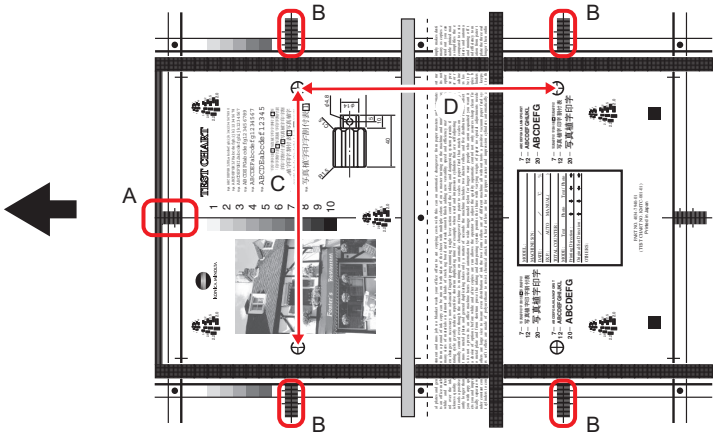

Adjustment item	Ref. page
A: Image Position: Leading Edge	I.11.3.6.(1) Image Position: Leading Edge
B: Scanner Image Side Edge	I.11.3.6.(2) Scanner Image Side Edge
C: Main Scan Zoom Adj.	I.11.3.6.(3) Main Scan Zoom Adj.
D: Sub Scan Zoom Adj.	I.11.3.6.(4) Sub Scan Zoom Adj.

(1) Image Position: Leading Edge

(a) Use

- To adjust variations in mounting accuracy and sensitivity of the scanner home sensor and in mounting accuracy of the original width scale by varying the scan start position in the main scan direction.
- When the original glass is replaced.
- When the original width scale is replaced.
- The scanner home sensor has been replaced.

(b) Setting range

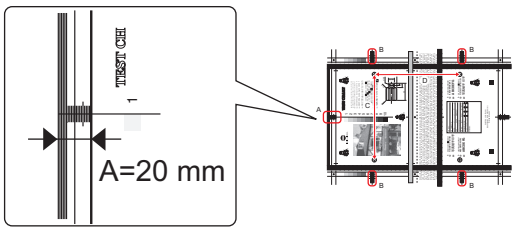

- A width on the test chart and one on the test pattern are measured and adjusted so that the difference of A width satisfies the target shown below.
- An adjustment must have been completed correctly of [Leading Edge Adjustment] of [Printer Area].

Target	Width A: ± 1.5 mm
Setting range	-3.0 mm +3.0 mm (in 0.1 mm increments)

(c) Procedure

1. Call the Service Mode to the screen.
2. Touch these keys in this order: [Machine] -> [Scan Area] -> [Image Position: Leading Edge].
3. Position the test chart correctly so that the original reference point is aligned with the scale.
4. Press the Start key to make a copy.
5. Check point A on the test pattern.
6. If width A on the test pattern falls outside the target, change the setting using the [+] / [-] key.
   - If the test pattern is less than the target, increase the setting value.
   - If the test pattern exceeds the target, decrease the setting value.
7. Press the Start key to make another test pattern.
8. Check the image on the test pattern to see if the specifications are met.
9. Make adjustments until the targets are met.

(2) Scanner Image Side Edge

(a) Use

- To adjust part-to-part variations in accuracy of scanner parts and their mounting accuracy by varying the scan start position in the main scan direction.
- When the CCD unit is replaced.
- When the original glass is replaced.

(b) Setting range

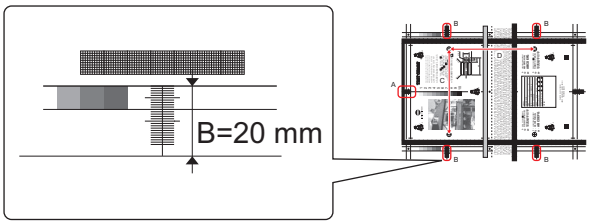

- B width on the test chart and one on the test pattern are measured and adjusted so that the difference of B width satisfies the target shown below.
- An adjustment must have been completed correctly of [Printer Image Centering Side 1] of [Printer Area].

Target	Width B: ± 1.5 mm
Setting range	-4.0 mm to +4.0 mm (in 0.1 mm increments)

(c) Procedure

1. Call the Service Mode to the screen.
2. Touch these keys in this order: [Machine] -> [Scan Area] -> [Scanner Image Side Edge].
3. Position the test chart correctly so that the original reference point is aligned with the scale.

4. Press the Start key to make a copy.
5. Check point B on the image of the test pattern.
6. If the test pattern falls outside the target, change the setting using the [+] / [-] key.
   - If the test pattern is less than the target, increase the setting value.
   - If the test pattern exceeds the target, decrease the setting value.
7. Press the Start key to make a test pattern.
8. Check point B of the image on the test pattern to see if the specifications are met.
9. Make adjustments until the targets are met.

(3) Main Scan Zoom Adj.

(a) Use

- To adjust the zoom ratio in the main scan direction for the scanner section.
- The CCD unit has been replaced.

(b) Setting range

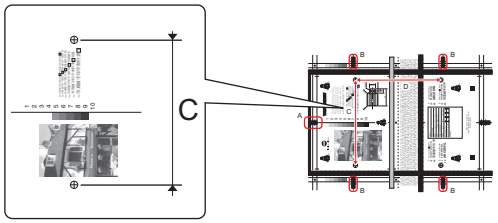

- Measure C width on the test chart and on the test pattern, and adjust the gap to be within the following target.
- An adjustment must have been completed correctly of [Paper Feed Direction Adj.] of [Printer Area].

Target	Width C: ± 1.0 mm
Setting range	0.990 to 1.010 (in 0.001 increments)

* Standard size when using a scale: 200.0 mm

(c) Procedure

1. Call the Service Mode to the screen.
2. Touch these keys in this order: [Machine] -> [Scan Area] -> [Main Scan Zoom Adj.].
3. Position the test chart correctly so that the original reference point is aligned with the scale.
4. Press the Start key to make a test pattern.
5. Check the C width on the image of the copy.
6. If the test pattern falls outside the target, change the setting using the [+] / [-] key.
   - If the C width on the test pattern is less than one on test chart, increase the setting.
   - If the C width on the test pattern exceeds one on test chart, decrease the setting.
7. Press the Start key to make another test pattern.
8. Check the image on the test pattern to see if the specifications are met.
9. Make adjustments until the targets are met.

(4) Sub Scan Zoom Adj.

(a) Use

- To adjust the zoom ratio in the sub scan direction for the scanner section.

(b) Setting range

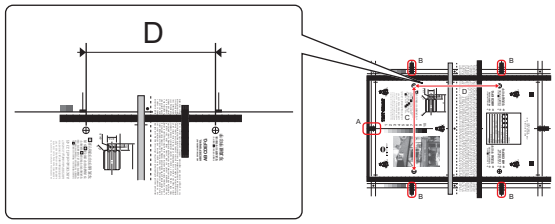

- Measure D width on the test chart and on the test pattern, and adjust the gap to be within the following target.
- An adjustment must have been completed correctly of [Paper Feed Direction Adj.] of [Printer Area].

Target	Width D: ± 1.5 mm
Setting range	0.990 to 1.010 (in 0.001 increments)

* Standard size when using a scale: 300.0 mm

(c) Procedure

1. Call the Service Mode to the screen.
2. Touch these keys in this order: [Machine] -> [Scan Area] -> [Sub Scan Zoom Adj.].
3. Position the test chart correctly so that the original reference point is aligned with the scale.
4. Press the Start key to make a test pattern.
5. Check the D width on the image of the test pattern.
6. If the test pattern falls outside the target, change the setting using the [+] / [-] key.
   - If the D width on the test pattern is less than one on test chart, increase the setting.
   - If the D width on the test pattern exceeds one on test chart, decrease the setting.

7. Press the Start key to make another test pattern.
8. Check the image on the test pattern to see if the specifications are met.
9. Make adjustments until the targets are met.

11.3.7 Printer Reg. Loop Adj.

(1) Use

- To set the correction value of the paper loop length for each process speed of tray 1, tray 2-4 and LCT, manual or Duplex.
- To adjust the length of the loop formed in paper before the registration rollers.
- Use “Paper Passage” for paper passage check.
- When a paper skew occurs.
- When a paper misfeed occurs.

(2) Setting range

- The adjustable range is different depending on paper source and paper type.

	Tray 1	Tray 2-4, LCT (Built-in), LCT	manual	Duplex
Normal/Thin Paper	-11 to +7	-11 to +7	-11 to +7	-12 to +8
Thick 1/1+	-11 to +7	-11 to +7	-11 to +7	-12 to +8
Thick 2/3/4	-11 to +7	-11 to +7	-11 to +7	-12 to +8

(3) Procedure

1. Call the Service Mode to the screen.
2. Touch these keys in this order: [Machine] -> [Printer Reg. Loop Adj.].
3. Select a paper source and a processing speed where the settings are made by touching the corresponding keys.
4. Enter the new setting from the 10-key pad.
   - To decrease the loop amount: Decrease the setting value.
   - To increase the loop amount: Increase the setting value.

11.3.8 Color Registration Adjustment

- Not used

11.3.9 Print Head Skew Adj.

- Not used

11.3.10 LD adjustment

(1) LD Timing Adj.

(a) Use

- It displays the emission delay value between two laser diode.

(b) Procedure

1. Call the Service Mode to the screen.
2. Touch these keys in this order: [Machine] -> [LD adjustment] -> [LD Timing Adj.].
3. Check the LD emission delay value.
4. Touch [OK].

(2) LD 1/2 Balance Adj.

(a) Use

- This function adjusts the LD lightness balance between the two LDs to correct the difference of LD lightness between the LDs.
- This setting is made after the PH unit is replaced.
- This adjustment is made to prevent uneven density in highlighted halftone area processed with error diffusion being caused by inappropriate laser intensity.

(b) Procedure

1. Call the Service Mode to the screen.
2. Touch these keys in this order: [Machine] -> [LD adjustment] -> [LD 1/2 Balance Adj.].
3. Select [For adjustment] and press Start key.
4. Patterns are output with LD2 light intensity changed on the basis of LD1.

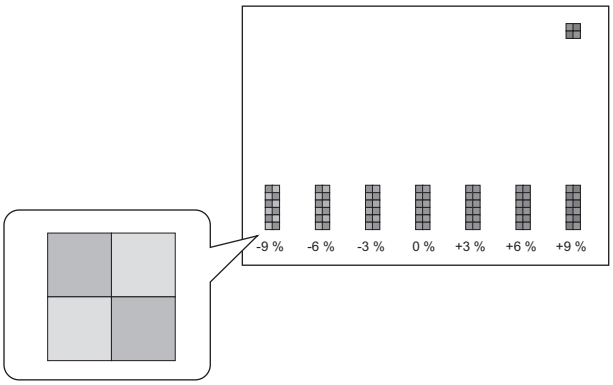

5. Each pattern has four squares. The two small squares diagonal to each other are printed with the same LD. (The pair of small squares where image density change corresponds to LD2.)
6. From the test pattern, select the pattern where the least density difference appears between LD1 and LD2.
7. Enter the adjustment value corresponding to the pattern you selected (see the above illustration) or a value close to the adjustment value using the 10-key pad on the panel.
8. Select [For effect confirmat.] and press Start key.
9. Check that LD2 small squares have no image noise of woodgrain.
10. Touch [OK].

(3) LD Light Width Adjustment

(a) Use

- To fine-adjust the light-emitting time of the laser that is scanned by the polygon motor.
- Use when the reproducibility of thin line is reduced.

NOTE

- **Adjustment value of this setting will be reflected by the image stabilization control.**

(b) Default setting

- +3

(c) Setting range

- 0 to +6 (Step:1)

(d) Procedure

1. Call the Service Mode to the screen.
2. Touch [Machine] -> [LD adjustment] -> [LD Light Width Adjustment].
3. Enter the new setting from the [+] / [-] key.
   - Increase the value: Light-emitting time will be lengthened.
   - Decrease the value: Light-emitting time will be shortened.

11.3.11 Manual Bypass Tray Width Adj

(1) Use

- To set the maximum width and the minimum width for the bypass paper width detection resistor of the manual bypass guide.
- Use when the manual bypass guide has been changed.
- Use when a false paper size is displayed when the manual bypass is used.

(2) Procedure

1. Call the Service Mode to the screen.
2. Touch these keys in this order: [Machine] -> [Manual Bypass Tray Width Adj].
3. Touch [Max. Width].
4. Load the bypass tray with paper having a width of 297 mm.
5. Press the Start key and check that the results are [OK].
6. Touch [Min. Width.].
7. Load the bypass tray with paper having a width of 100 mm.
8. Press the Start key and check that the results are [OK].

* Make the adjustment again if the results are [NG].

11.3.12 Lead Edge Erase Adjustment

(1) Use

- To set the leading edge erase amount of the paper.
- Upon user requests, it is possible to specify the void area where image is not printed along the leading edge.
- This adjustment can be made individually for First Side, Second Side, Thin Paper Front, and Thin Paper Back.

(2) Default setting

(a) First Side/Second Side

- 4 mm

(b) Thin Paper Front/Thin Paper Back

- 5 mm

(3) Setting item

(a) First Side/Second Side

- "4 mm"
- 5 mm
- 7 mm

NOTE

- **When "4 mm" is selected, 4.2 mm is the actual amount to be erased in print based on the control system of the machine.**

(b) Thin Paper Front/Thin Paper Back

- 4.0 mm to 10.0 mm (Step: 1.0 mm)

11.3.13 Non-Image Area Erase Check

(1) Use

- The non-image area erase function may not work properly under bright light source. Incoming light quantity is checked to verify that the non-image area erase function can work properly under the environment.
- Verification results are shown as follows:

OK	Works properly.
NG1	Works properly. However, data that may interfere with the non-image area erase function was found. This function may not work well with dark original.
NG2	Data that may interfere with the non-image area erase function was found.

- Use this feature when installing a new machine or reinstalling a machine in a new place.
- Use this feature when the non-image area erase function fails to work properly due to the changes of the surrounding environment at the installation site.

(2) Procedure

1. Call the Service Mode to the screen.
2. Touch these keys in this order: [Machine] -> [Non-Image Area Erase Check].
3. Press the Start key to start a check.

   NOTE

   - **Before the check, make sure that the DF or original cover is completely opened. In addition, make sure that no scratch or stain exists on the original glass.**

4. Check the result is "OK."

* If the check result is "NG1" or "NG2," reinstall the machine in another place or adjust the orientation of the machine to reduce light incidence on the machine. Then, perform the check again.

11.3.14 ADF Scan Glass Contamination

(1) Use

- To check the stain on the DF original glass and display the result.

  NOTE

  - **If the result is NG, "NG1" or "NG2" is displayed.**
    NG1 corresponds to the detection of stain on the front side and NG2 corresponds to that on the back side.

- To manually perform the pre-detection of the stain which is normally conducted when the main power switch is turned ON, recovering from the sleep/low power mode, etc.
- [ADF Scan Glass Contamination] will be conducted with the detection level set by the following setting.
  [Service Mode] -> [System 2] -> [ADF Scan Glass Contamin. Set.] -> [ADF Scan Glass Contamin. Sensitivity]
  When the above setting is set to "Not Set", "NG1" or "NG2" will be displayed even though the pre-detection is conducted.

(2) Procedure

1. Call the Service Mode to the screen.
2. Touch these keys in this order: [Machine] -> [ADF Scan Glass Contamination].
3. Press the start key to start the pre-detection.
4. Check to make sure that "OK" is displayed for the result.

* When the result says "NG1" or "NG2", clean the glass and check again.

11.3.15 Exhaust Fan Stop Delay

(1) Use

- It sets the period of time till the ozone fan (FM13) stops.
- When the ozone fan stops when it is rotating at the full speed such as when the jam/trouble occurred after printing/image stabilization is finished, the period of time until it stops is delayed to discharge ozone which is around photo conductor.

(When shifting to the sleep mode immediately, ozone fan does not stop but carry out delay rotation.)

(2) Default setting

- 0

(3) Procedure

- 0 to 15 (minutes) can be entered with the 10-key pad. (Default is 0.)

NOTE

- **When this setting is set to 0 (minute), the fan motor runs for 5 seconds before it stops.**

11.3.16 PPM Control Choice

(1) Use

- To improve productivity when printing on thin paper.
- To give a higher priority to productivity than to fusing performance, change the setting to “100 %.”

(2) Default setting

- 70 %

(3) Setting item

- 100 %
- “70 %”

11.4 Firmware Version

11.4.1 Use

- To check the firmware version.
- Use when the firmware is upgraded.
- When the firmware is upgraded or PWB is replaced.

11.4.2 Procedure

1. Call the Service Mode to the screen.
2. Touch [Firmware Version].
3. Select the appropriate key from 1 to 6 to check the firmware version.

11.5 Imaging Process Adjustment

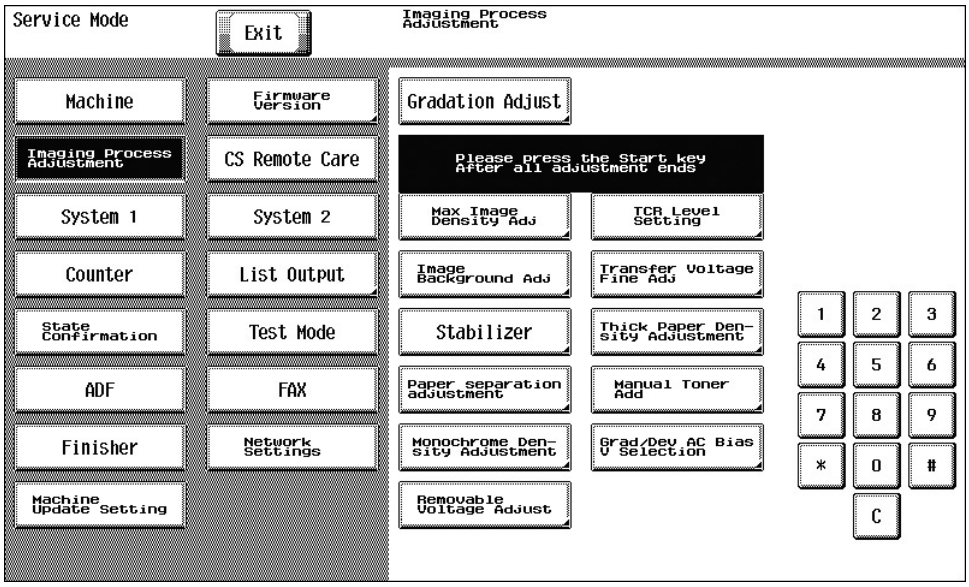

11.5.1 Gradation Adjust

(1) Use

- To make an automatic adjustment of gradation based on the test pattern produced and the readings taken by the scanner.
- Use this adjustment when reproduction of gradations and density has deteriorated.
- The drum unit or developing unit has been replaced.
- The image transfer belt unit has been replaced.

* The Adj. Values of “Dark” and “Highlight” shown on the gradation adjust screen represent how much corrections are made to produce an ideal image output. Conv. Value shows the difference from the ideal image density.
* The closer the Conv. Value to 0, the more ideal the image.

Mode key	Description
Stabilizer	• The image stabilization is performed. • After the image stabilization is performed, [Printer] / [Copy] key will become selectable.

Printer	The adjustment conforms to FEET (non-screen). And images and lines should be corrected with placing match value on the reproducibility (priority on resolution).
Copy	Priority is to increase the number of images that can be stored in the memory (priority on compression). And images should be corrected with making a priority on the graduation (priority on graduation).

Example of the gradation adjustment screen (Printer).

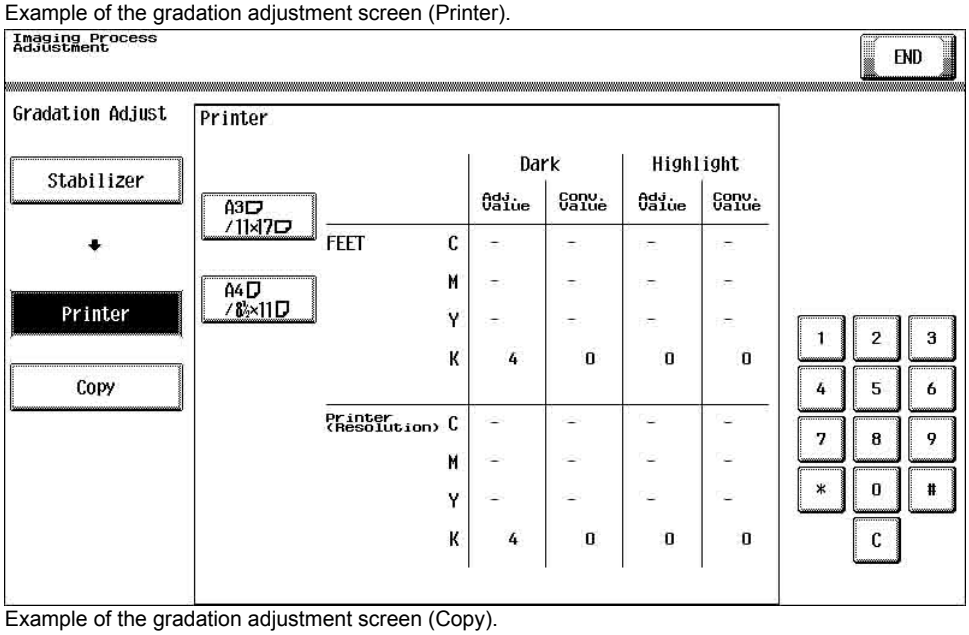

Example of the gradation adjustment screen (Copy).

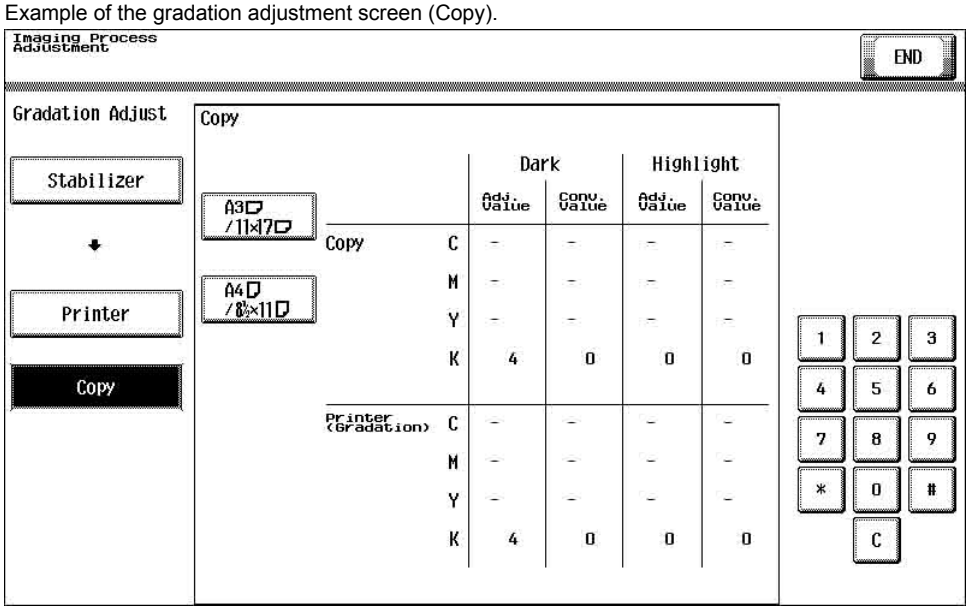

(2) Procedure

NOTE

- **When executing the gradation adjustment, make sure to use the white paper for copy.**

1. Call the Service Mode to the screen.
2. Touch these keys in this order: [Image Process Adjustment] -> [Gradation Adjust].
3. Touch [Stabilizer] and the Start key to perform image stabilization.
   NOTE
   - **Before executing Gradation adjust, be sure to perform Stabilizer.**
4. Select Print or Copy and select the paper size on which test pattern is printed.
5. Press the Start key to let the machine produce a test pattern.
   NOTE
   - **When the image stabilization performed in step 3 is NG, the Start key stops functioning.**
   - **When one of the alert codes, P-5, P-9 is on the screen and [Printer] is selected, the Start key stops functioning.**
6. Place the test pattern produced on the original glass.
   NOTE
   - **Depending on the size of the test pattern, it is set in a different position. Set the test pattern according to the instructions displayed on the control panel.**
7. Place ten blank sheets of paper on the test pattern and lower the original cover.
8. Press the Start key. (The machine will then start scanning the test pattern.)
9. Touch [OK] and repeat steps from 4 through 8 twice (a total of three times).
10. Touch [Gradation Adjust] to display the Adj. Values and Conv. Values for Dark and Highlight.

11. Use the following procedures to check the Conv. Value.

NOTE

- **Dark: 0 ± 100 and Highlight: 0 ± 60: It completes the adjustment procedure.**
- **If neither Dark nor Highlight falls outside the ranges specified above: Perform steps from 4 to 8.**
- **If the convergence falls within the specified range after the second Gradation Adjustment, further adjustment may not be necessary.**
- If a fault is detected, “0” is displayed for all values. In that case, after turning off the main power switch, turn it on again more than 10 seconds after and then make the gradation adjustment again.
- If either dark or highlight still remains outside the specified ranges perform Max Image Density Adj.
- If a total of four sequences of gradation adjust do not bring the values into the specified range, check the image.
- If the image is faulty, perform the troubleshooting procedures for image problems.

11.5.2 Max Image Density Adj

(1) Use

- To adjust gradation and image density to target reproduction levels by varying the maximum amount of toner sticking to paper through auxiliary manual fine-adjustment of gamma after gradation adjust.
- An image quality problem is not corrected even after gradation adjust has been run.

(2) Default setting

- 0

(3) Setting range

- -10 to +10 (step: 1 *)
  *: 1 step corresponds to 0.03 in density difference.

(4) Procedure

1. Call the Service Mode to the screen.
2. Touch these keys in this order: [Imaging Process Adjustment] -> [Max Image Density Adj].
3. Select [Copy] or [Printer].
4. Enter the new setting from the 10-key pad and [+/-].
   - To increase the maximum amount of toner sticking, increase the setting value.
   - To decrease the maximum amount of toner sticking, decrease the setting value.
5. Touch [END] to return to the [Imaging Process Adjustment] menu screen.
6. Touch [Stabilizer].
7. Touch [Stabilization Only].
8. Press the Start key to validate the adjustment value.
9. Check the print image for any image problem.

NOTE

- **If the setting value has been changed, be sure to run an image stabilization sequence to make valid the new value.**

11.5.3 TCR Level Setting

(1) Use

- To adjust the T/C control level when an abnormal image density occurs as a result of a change in the amount of charge of toner and carrier due to an environmental change.
- Use when T/C changes due to changes in environmental conditions of the user site.

(2) Default setting

- 0

(3) Setting range

- -3 to +3
  (1 step in positive (+) direction: 0.5 % increase, 1 step in negative (-) direction: 0.5 % decrease, Center value 0 corresponds to 6.5 % T/C ratio.)

(4) Procedure

1. Call the Service Mode to the screen.
2. Touch these keys in this order: [Imaging Process Adjustment] -> [TCR Level Setting].
3. Enter the new setting from the 10-Key pad and [+/-] key.
   - To increase T/C, increase the setting value.
   - To decrease T/C, decrease the setting value.
4. Touch [END] to validate the adjustment value.
5. Check the print image for any image problem.

11.5.4 Image Background Adj

(1) Use

- To adjust the highlight portion (fog level) to the target reproduction level by making an auxiliary manual fine-adjustment of image background after gradation adjust.
- Use when a foggy background occurs due to a printer problem.

(2) Default setting

- 0

(3) Setting range

- -5 to +5 (step: 1*)
  *: 1 step corresponds to 10 V.

(4) Procedure

1. Call the Service Mode to the screen.
2. Touch these keys in this order: [Imaging Process Adjustment] -> [Image Background Adj].
3. Enter the new setting from the 10-key pad.
   - To make the background level foggier, decrease the setting value.
   - To make the background level less foggy, increase the setting value.
4. Touch [END] to return to the [Image Adjust] menu screen.
5. Touch [Stabilizer].
6. Touch [Stabilization Only].
7. Press the Start key to validate the adjustment value.
8. Check the print image for any image problem.

NOTE

- **If the setting value has been changed, be sure to run an image stabilization sequence to make valid the new value.**

11.5.5 Transfer Voltage Fine Adj

(1) Primary transfer adj.

(a) Use

- Adjust the output value for the 1st image transfer voltage.
- To use when white spots appeared.

(b) Default setting

- 0

(c) Setting range

- -8 to +7 (step: 1 *)
  *1: step is equivalent to 2µA.

(d) Procedure

1. Call the Service Mode to the screen.
2. Select [Test Mode] -> [Halftone Pattern] to output the test pattern.
3. When the test pattern image has white spots, adjust with the following procedure.
4. Touch these keys in this order: [Imaging Process Adjustment] -> [Transfer Voltage Fine Adj].
5. Select [Primary transfer adj.].
6. Change the setting value using the [+] / [-] keys.
   Adjust the output value for the 1st image transfer voltage by;
   - Increasing it: Increase the setting value (white spots will decrease).
   - Decreasing it: Decrease the setting value.
7. Touch [OK] key to set the setting value.
   Gradually increase the setting value to the acceptable white spots level while checking the test pattern.

NOTE

- **Photo conductor memory may occur by taking measure to white spots occurred by increasing the 1st image transfer voltage to adjust it.**
- **Check the image on the test pattern or the test chart when adjusting.**

(2) 2nd Transfer Adj

(a) Use

- Adjust the 2nd image transfer output (ATVC) on the 1st page and the 2nd page for each paper type.
- To use when the transfer failure at the trailing edge occurs.
- Pressing the [AUTO] key down activates the 2nd image transfer amperage upper and lower limit control. In this case, the machine uses the voltage determined by the auto transfer voltage control and the 2nd image transfer voltage fine adj value does not take effect.

(b) Default setting

- Auto

(c) Setting range

- -8 to +7 (step: 1 *)
  *1: step is equivalent to 100 V.

(d) Procedure

1. Call the Service Mode to the screen.
2. Touch these keys in this order: [Imaging Process Adjustment] -> [Transfer Voltage Fine Adj].
3. Select [2nd Transfer Adj].
4. Select the side of the image (First Side or Second Side), on which the transfer failure occurs.

NOTE
- **For envelopes, OHP film and long size paper, only first side can be selected.**

5. Select the paper type with the transfer failure.
6. Enter the new setting from the [+] / [-] keys.
   - To increase the ATVC value (in the direction of a foggier image), increase the setting value.
   - To decrease the ATVC value (in the direction of a less foggy image), decrease the setting value.
7. Touch [END] to validate the setting value.
8. Check the print image for any image problem.

NOTE
- *** Press [Auto] to automatically control the 2nd image transfer output without using the 2nd image transfer voltage fine adj value.**

11.5.6 Stabilizer

(1) Stabilization Only

(a) Use

- The image stabilization sequence is carried out without clearing the historical data of image stabilization control.
- Use if an image problem persists even after gradation adjustment has been executed.
- When [Max Image Density Adj] and [Image Background Adj] of Service Mode are changed.

(b) Procedure

1. Call the Service Mode to the screen.
2. Touch these keys in this order: [Imaging Process Adjustment] -> [Stabilization Only].
3. Press the Start key to start Stabilizer.
4. The Start key turns orange and stays lit up orange during the stabilizer sequence.
5. Stabilizer is completed when the Start key turns blue.

(2) Initialize+Image Stabilization

(a) Use

- To carry out an image stabilization sequence after the historical data of image stabilization control has been initialized.
- Use if an image problem persists even after gradation adjustment has been executed.
- Use if tone reproduction and maximum density are faulty even after stabilizer mode has been executed.

(b) Procedure

1. Call the Service Mode to the screen.
2. Touch these keys in this order: [Imaging Process Adjustment] -> [Stabilizer].
3. Touch [Initialize+Image Stabilization].
4. Press the Start key to start stabilizer.
   The Start key turns orange and stays lit up red during the stabilizer sequence.
5. Stabilizer is completed when the Start key turns blue.

11.5.7 Thick Paper Density Adjustment

(1) Use

- To fine-adjust density of printed images for thick paper.
- To change the density of the printed image with thick paper.

(2) Default setting

- 0

(3) Setting range

- -5 to +5 (step: 1)

(4) Procedure

1. Call the Service Mode to the screen.
2. Touch these keys in this order: [Imaging Process Adjustment] -> [Thick Paper Density Adjustment].
3. Select [Thick Type1] or [Thick Type2].
4. Touch the Lighter or Darker key to correct the image density.
   - Light color: Touch the Darker key.
   - Dark color: Touch the Lighter key.
5. Touch [END] to validate the setting value.

11.5.8 Paper separation adjustment

(1) Use

- By changing the period between the activation of the registration roller and the 2nd image transfer output, the paper separation position can be adjusted for the 1st and 2nd sides of paper.
- To ensure proper balance between paper separating and image transferring performances by varying the paper separation position applied for duplex printing of thin paper (52 to 59 g/m^2) in hot and humid conditions.

(2) Default setting

- 0

(3) Setting range

- -10 mm to +10 mm (step: 0.1 mm)

(4) Procedure

1. Call the Service Mode to the screen.
2. Touch these keys in this order: [Imaging Process Adjustment] -> [Paper separation adjustment].
3. Select [First Side], [Second Side], [Thin Paper Front] or [Thin Paper Back].
4. Use the [+] or [-] key to change the setting value.
   - Priority on paper separation performance: Increase the setting value.
   - Priority on image transfer performance: Decrease the setting value.
5. Touch [OK] and determine the setting value.
6. Make a print and check the produced image.

11.5.9 Manual Toner Add

(1) Manual Toner Add

(a) Use

- To adjust the set T/C level by replenishing an auxiliary supply of toner when a low ID occurs due to a lowered T/C after large numbers of prints have been made of originals having a high image density.
- When there is a drop in T/C ratio.

(b) Procedure

1. Call the Service Mode to the screen.
2. Touch these keys in this order: [Imaging Process Adjustment] -> [Manual Toner Add].
3. Touch [Black].
4. Pressing the Start key will let the machine detect the current toner density and; if the density is lower than a reference value, a toner replenishing sequence and then a developer agitation sequence are run.
5. These sequences are repeated up to a maximum of four times until the toner density reaches the reference value. If the toner density is found to be higher than the reference value, only a developer agitation sequence is carried out.

(2) Hopper Toner Filling

(a) Use

- To fill the sub hopper with toner and perform agitate in the developing unit.
- Used when toner is manually supplied to the toner hopper and agitate in the developing unit is performed.

(b) Procedure

1. Call the Service Mode to the screen.
2. Touch these keys in this order: [Imaging Process Adjustment] -> [Manual Toner Add] -> [Hopper Toner Filling].
3. Press the Start key to start filling and agitating operations.

11.5.10 Monochrome Density Adjustment

(1) Use

- To fine-adjust the density of the printed image for a black print.
- To vary the density of the printed image of a black print.

(2) Default setting

- 0

(3) Setting range

- -2 to +2 (step: 1)

(4) Procedure

1. Call the Service Mode to the screen.
2. Touch these keys in this order: [Imaging Process Adjustment] -> [Monochrome Density Adjustment].
3. Touch [Lighter] or [Darker] as necessary to correct the image density.
   - If the black is light, touch the Darker key.
   - If the black is dark, touch the Lighter key.
4. Touch [END] to validate the setting value.

11.5.11 Grad/Dev AC Bias V Selection

(1) Use

- To change the setting of the development AC voltage.
- When this function is turned ON, it decreases the development AC voltage, thereby preventing voltage leak from occurring.
- Use when patches of white occur in the image in an ambience of low atmospheric pressure, such as in high altitudes.

(2) Default setting

- OFF

(3) Setting item

- ON
- “OFF”

11.5.12 Removable Voltage Adjust

(1) Use

- To allow the basic charge neutralizing voltage to be adjusted.
- To prevent separation failure (jam, paper conveyance failure) that may occur when paper other than recommended one is used by adjusting the neutralization voltage to the one that suits the type of paper the user uses.

(2) Default setting

- Auto

(3) Setting range

- -3 to +3 (Step: 1*)
  *1: step is equivalent to 1,000 V.

(4) Procedure

1. Call the Service Mode to the screen.
2. Touch these keys in this order: [Imaging Process Adjustment] -> [Removable Voltage Adjust].
3. Select [First Side], [Second Side], [Thin Paper Front] or [Thin Paper Back].
4. Enter the new setting from the [+] / [-] keys.
   - To increase the neutralization voltage, increase the setting value.
   - To decrease the neutralization voltage, decrease the setting value.
5. Touch [END] to validate the setting value.
6. Check the print image for any image problem.

NOTE

- **Select [Auto] at each paper type to automatically control the neutralization voltage without using the neutralization voltage setting value.**

11.6 CS Remote Care (Outlines)

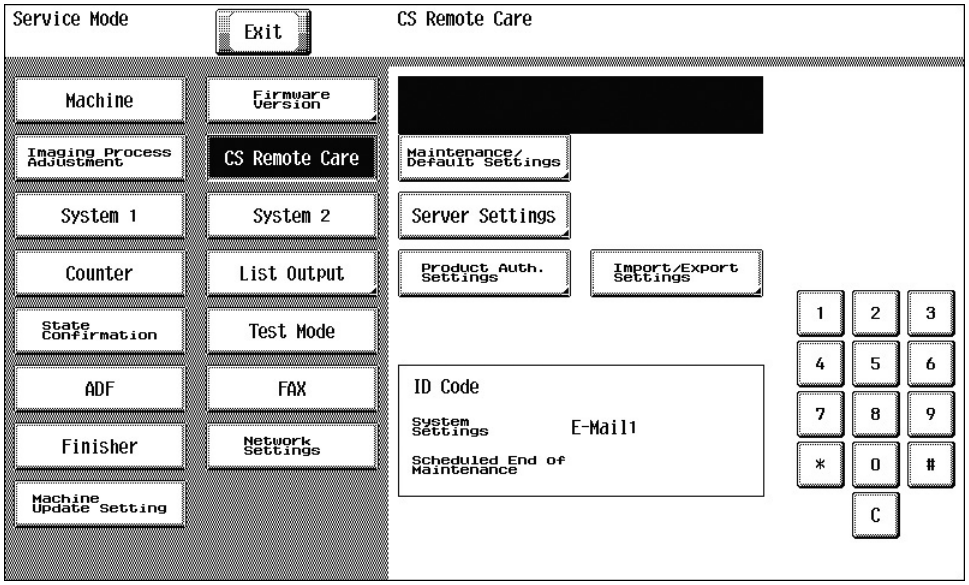

- CS Remote Care enables the machine and the computer at CS Remote Care center to exchange data through telephone/fax line, network or E-mail in order to control the machine.
- CS Remote Care enables the machine to call the computer at the center when trouble occurs. It also enables the computer at the center to contact the machine for the necessary data.
- Data which CS Remote Care handles can be divided into the following groups.
  - Data which show the status of use of the machine such as total count, PM count.
  - Data which show the abnormal situation on the machine such as where and how often errors occur.
  - Data on adjustment
  - Data on setting

  NOTE

  - **It cannot be set when the following setting is set to “ON”.**
    [Administrator Settings] -> [Security Settings] -> [Enhanced Security Mode]

11.7 Setting up the CS Remote Care

NOTE

- **For resetting up the machine which CS Remote Care has already been set up, clear the RAM for CS Remote Care before resetting.**
  I.11.13.3.(4) RAM Clear
- **When using a telephone line modem for connection, use the data modem which is based on the ITU-T recommendations V.34/V. 32 bis/V.32 and AT command.**

11.7.1 Using the telephone line modem

1. Register the device ID
   - Register the device ID to the application at CS Remote Care center.
     NOTE
     - **The initial connection is not available unless the device ID is registered.**
2. Connecting the modem
   - Turn the power for the modem OFF. Connect the machine and the modem with a modem cable. Connect the modem and the wall jack with a modular cable.
     NOTE
     - **For connecting the modular cable, see the manual for the modem.**
3. Inputting the ID code
   1. Select [Service Mode] -> [CS Remote Care] -> [Maintenance/Default Settings], and touch [ID Code].
   2. Input the seven digits ID of the service person, and touch [ID Code] again.

   I.11.13.2 Maintenance/Default Settings - ID Code
4. Clearing the RAM
   1. Select [Service Mode] -> [CS Remove Care] -> [Maintenance/Default Settings], and touch [Detail Setting].
   2. Touch [RAM Clear].
   3. Select Set, and touch [OK].

   I.11.13.3.(4) RAM Clear
5. Selecting the CS Remote Care function
   - Select [Service Mode] -> [CS Remove Care] -> [Maintenance/Default Settings] -> [System Selection], and touch [Modem].
6. Inputting the ID code
   1. Select [Service Mode] -> [CS Remote Care] -> [Maintenance/Default Settings], and touch [ID Code].
   2. Input the seven digits ID of the service person, and touch [ID Code] again.

   I.11.13.2 Maintenance/Default Settings - ID Code
7. Setting the date and time for CS Remote Care
   1. Select [Service Mode] -> [CS Remote Care] -> [Maintenance/Default Settings], and touch [Detail Setting].
   2. Touch [Date & Time Setting].
   3. Input the date, time and the time zone using the 10-key pad, and touch [Set].

   I.11.13.3.(3) Date & Time Setting
8. Setting the Center ID
   1. Select [Service Mode] -> [CS Remote Care] -> [Maintenance/Default Settings], and touch [Detail Setting].
   2. Touch [Machine Setting] -> [Center ID], and input the Center ID (five digits).

   I.11.13.3.(1) Basic Setting (E-Mail1, E-Mail2, Modem or Fax)
9. Confirm the Device ID
   1. Select [Service Mode] -> [CS Remote Care] -> [Maintenance/Default Settings], and touch [Detail Setting].
   2. Touch [Machine Setting] -> [Device ID], and input Device ID (13 digits).
      NOTE
      - **[Device ID] displays the serial number that is entered in [Service Mode] -> [System 1] -> [Serial Number].**
10. Setting the telephone number of the Center
    1. Select [Service Mode] -> [CS Remote Care] -> [Maintenance/Default Settings], and touch [Detail Setting].
    2. Touch [Machine Setting] -> [Center Telephone Number].
    3. Input the telephone number of the center using the 10-key pad and [P], [T], [W], [-].

    I.11.13.3.(1) Basic Setting (E-Mail1, E-Mail2, Modem or Fax)
11. Inputting the device telephone number
    1. Select [Service Mode] -> [CS Remote Care] -> [Maintenance/Default Settings], and touch [Detail Setting].
    2. Touch [Machine Setting] -> [Device Telephone Number].
    3. Input the Device telephone number using the 10-key pad and [P], [T], [W], [-].

    I.11.13.3.(1) Basic Setting (E-Mail1, E-Mail2, Modem or Fax)
12. Inputting the AT command for initializing the modem
    1. Select [Service Mode] -> [CS Remote Care] -> [Maintenance/Default Settings], and touch [Detail Setting].
    2. Touch [AT Command].
    3. Input AT Command.
       NOTE
       - **Change this command only when it is necessary. (They do not need to be changed in normal condition.)**
       - **For details on AT command, see the manual for the modem.**

    I.11.13.3.(8) AT Command
13. Setting the DIPSW for CS Remote Care
    NOTE
    - **This setting is not normally necessary.**
      Take this step only when necessary in a specific connecting condition.

14. Executing the initial transmission
    1. Select [Service Mode] -> [CS Remote Care] -> [Maintenance/Default Settings], and touch [Detail Setting].
    2. Touch [initial transmission] key on the right bottom of the screen to start initial transmission.
    3. When the machine is properly connected with the center, CS Remote Care setting screen will be displayed.
       NOTE
       - **The initial transmission key at the right bottom of the screen will be displayed only when the center ID, the device ID, Telephone number of the center and the device telephone number have been input.**

However, if an invalid value is input as the device ID, the initial transmission key is not displayed.

I.11.13.3 Maintenance/Default Settings - Detail Setting

11.7.2 Using the Fax line modem

NOTE

- **Setting will be available only when the optional fax board is installed.**

1. Register the device ID
   - Register the device ID to the application at CS Remote Care center.
     NOTE
     - **The initial connection is not available unless the device ID is registered.**
2. Remove the telephone line modem
   - Be sure to remove the telephone line modem when the fax line is used.
3. Inputting the ID code
   1. Select [Service Mode] -> [CS Remote Care] -> [Maintenance/Default Settings], and touch [ID Code].
   2. Input the seven digits ID of the service person, and touch [ID Code] again.

   I.11.13.2 Maintenance/Default Settings - ID Code
4. Clearing the RAM
   1. Select [Service Mode] -> [CS Remove Care] -> [Maintenance/Default Settings], and touch [Detail Setting].
   2. Touch [RAM Clear].
   3. Select Set, and touch [OK].

   I.11.13.3.(4) RAM Clear
5. Selecting the CS Remote Care function
   - Select [Service Mode] -> [CS Remove Care] -> [Maintenance/Default Settings] -> [System Selection], and touch [Fax].
6. Inputting the ID code
   1. Select [Service Mode] -> [CS Remote Care] -> [Maintenance/Default Settings], and touch [ID Code].
   2. Input the seven digits ID of the service person, and touch [ID Code] again.

   I.11.13.2 Maintenance/Default Settings - ID Code
7. Setting the date and time for CS Remote Care
   1. Select [Service Mode] -> [CS Remote Care] -> [Maintenance/Default Settings], and touch [Detail Setting].
   2. Touch [Date & Time Setting].
   3. Input the date, time and the time zone using the 10-key pad, and touch [Set].

   I.11.13.3.(3) Date & Time Setting
8. Setting the Center ID
   1. Select [Service Mode] -> [CS Remote Care] -> [Maintenance/Default Settings], and touch [Detail Setting].
   2. Touch [Machine Setting] -> [Center ID], and input the Center ID (five digits).

   I.11.13.3.(1) Basic Setting (E-Mail1, E-Mail2, Modem or Fax)
9. Confirm the Device ID
   1. Select [Service Mode] -> [CS Remote Care] -> [Maintenance/Default Settings], and touch [Detail Setting].
   2. Touch [Machine Setting] -> [Device ID], and input Device ID (13 digits).
      NOTE
      - **[Device ID] displays the serial number that is entered in [Service Mode] -> [System 1] -> [Serial Number].**
10. Setting the telephone number of the Center
    1. Select [Service Mode] -> [CS Remote Care] -> [Maintenance/Default Settings], and touch [Detail Setting].
    2. Touch [Machine Setting] -> [Center Telephone Number].
    3. Input the telephone number of the center using the 10-key pad and [P], [T], [W], [-].

    I.11.13.3.(1) Basic Setting (E-Mail1, E-Mail2, Modem or Fax)
11. Inputting the device telephone number
    1. Select [Service Mode] -> [CS Remote Care] -> [Maintenance/Default Settings], and touch [Detail Setting].
    2. Touch [Machine Setting] -> [Device Telephone Number].
    3. Input the Device telephone number using the 10-key pad and [P], [T], [W], [-].

    I.11.13.3.(1) Basic Setting (E-Mail1, E-Mail2, Modem or Fax)
12. Setting the DIPSW for CS Remote Care
    NOTE
    - **This setting is not normally necessary.**
      Take this step only when necessary in a specific connecting condition.
13. Executing the initial transmission
    1. Select [Service Mode] -> [CS Remote Care] -> [Maintenance/Default Settings], and touch [Detail Setting].
    2. Touch [initial transmission] key on the right bottom of the screen to start initial transmission.
    3. When the machine is properly connected with the center, CS Remote Care setting screen will be displayed.
       NOTE
       - **The initial transmission key at the right bottom of the screen will be displayed only when the center ID, the device ID, Telephone number of the center and the device telephone number have been input.**
         However, if an invalid value is input as the device ID, the initial transmission key is not displayed.

    I.11.13.3 Maintenance/Default Settings - Detail Setting

11.7.3 Using E-mail

1. Register the device ID
   - Messages can be exchanged only between the center with initial connection and the copier.
     NOTE
     - **The initial connection is not available unless the device ID is registered.**
2. Remove the telephone line modem
   - Be sure to remove the telephone line modem when e-mail is used.
3. Inputting the ID code
   1. Select [Service Mode] -> [CS Remote Care] -> [Maintenance/Default Settings], and touch [ID Code].
   2. Input the seven digits ID of the service person, and touch [ID Code] again.

   I.11.13.2 Maintenance/Default Settings - ID Code

4. Clearing the RAM
   1. Select [Service Mode] -> [CS Remove Care] -> [Maintenance/Default Settings], and touch [Detail Setting].
   2. Touch [RAM Clear].
   3. Select Set, and touch [OK].

   I.11.13.3.(4) RAM Clear
5. Selecting the CS Remote Care function
   - Select [Service Mode] -> [CS Remote Care] -> [Maintenance/Default Settings] -> [System Setting], and touch [E-Mail 1] or [E-Mail 2].
6. Inputting the ID code
   1. Select [Service Mode] -> [CS Remote Care] -> [Maintenance/Default Settings], and touch [ID Code].
   2. Input the seven digits ID of the service person, and touch [ID Code] again.

   I.11.13.2 Maintenance/Default Settings - ID Code
7. Setting the date and time for CS Remote Care
   1. Select [Service Mode] -> [CS Remote Care] -> [Maintenance/Default Settings], and touch [Detail Setting].
   2. Touch [Date & Time Setting].
   3. Input the date, time and the time zone using the 10-key pad, and touch [Set].

   I.11.13.3.(3) Date & Time Setting
8. Setting the Center ID
   1. Select [Service Mode] -> [CS Remote Care] -> [Maintenance/Default Settings], and touch [Detail Setting].
   2. Touch [Machine Setting] -> [Center ID], and input the Center ID (five digits).

   I.11.13.3.(1) Basic Setting (E-Mail1, E-Mail2, Modem or Fax)
9. Confirm the Device ID
   1. Select [Service Mode] -> [CS Remote Care] -> [Maintenance/Default Settings], and touch [Detail Setting].
   2. Touch [Machine Setting] -> [Device ID], and input Device ID (13 digits).

   NOTE
   - **[Device ID] displays the serial number that is entered in [Service Mode] -> [System 1] -> [Serial Number].**
10. Encryption setting
    1. Select [Service Mode] -> [CS Remote Care] -> [Maintenance/Default Settings], and touch [Detail Setting].
    2. Touch [Basic Setting] and select either Encryption or No Encryption.
11. Retransmission interval on e-mail delivery error
    - When selecting [E-mail 2], set the retransmission interval on e-mail delivery error in software SW setting.

    I.11.8 Software SW setting for CS Remote Care
12. Setting the Respond Timeout
    1. Select [Service Mode] -> [CS Remote Care] -> [Maintenance/Default Settings], and touch [Detail Setting].
    2. Touch [Respond Timeout] and enter the response timeout using the 10-key pad.

    NOTE
    - **Under normal conditions, there is no need to change the default setting.**

    I.11.13.3.(7) Response Time Out
13. Setting the E-mail address
    1. Select [Service Mode] -> [CS Remote Care] -> [Maintenance/Default Settings], and touch [Server Set].
    2. Touch [Server for RX], and set POP3 server address, POP3 login name, POP3 password and POP3 port number.
    3. Press [Receive], and set the E-Mail address, Mail Check, Connection Time Out and APOP Authentication.
    4. Touch [Send], and set the SMTP server address, SMTP port number, Connection Time Out, and APOP Authentication.
    5. Touch [TX/RX Test], and press Start key to carry out a transmission/reception test. If it fails to exchange messages, see the error message to take necessary measure, and try again.

    I.11.13.4.(1) Server for RX-POP3 server
14. When selecting [E-Mail2]:
    1. Select [Service Mode] -> [CS Remote Care] -> [Maintenance/Default Settings], and touch [Detail Setting].
    2. Touch [Schedule] and set the schedule of periodic transmission.
    3. Touch [Center Notifi. Item] and set items that will be reported to the Center.

    I.11.13.3.(1) Basic Setting (E-Mail1, E-Mail2, Modem or Fax)
15. Receiving the initial connection E-mail message
    - Sending the initial connection E-mail message from the center to the address of the copier.

    NOTE
    - **When receiving the initial connection E-mail message from the center while CS Remote Care-related screen is being displayed, the current setting information will be deleted, and CS Remote Care setting will be displayed.**
    - **For sending the initial connection E-mail, see the manual for CS Remote Care center.**
    - **Messages can be exchanged only between the center with initial connection and the copier.**
    - **The initial connection from the center will be carried out, and the E-mail address of the center will be stored in the copier.**
    - **When the initial registration is complete, the E-mail address of the center will be displayed by selecting [Service Mode] -> [CS Remote Care] -> [Maintenance/Default Settings] -> [Detail Setting] -> [Basic Setting] -> [E-Mail address].**

11.7.4 When using a WebDAV server in http communication

NOTE
- **When MFP is connected to the Internet via a proxy, the proxy server related settings are necessary in advance. The proxy settings used in the http communication for CS Remote Care is configured in [Administrator Settings] -> [Network Settings] -> [WebDAV Settings] -> [Proxy Setting for Remote Access].**

(1) Bilateral communication

1. Register the device ID
   - Register the device ID to the application at CS Remote Care center.

   NOTE
   - **The initial connection is not available unless the device ID is registered.**
2. Remove the telephone line modem
   - Be sure to remove the telephone line modem when the http communication is used.
3. Inputting the ID code
   1. Select [Service Mode] -> [CS Remote Care] -> [Maintenance/Default Settings], and touch [ID Code].
   2. Input the seven digits ID of the service person, and touch [ID Code] again.

I.11.13.2 Maintenance/Default Settings - ID Code

4. Clearing the RAM
   1. Select [Service Mode] -> [CS Remove Care] -> [Maintenance/Default Settings], and touch [Detail Setting].
   2. Touch [RAM Clear].
   3. Select Set, and touch [OK].

   I.11.13.3.(4) RAM Clear
5. Selecting the CS Remote Care function
   - Select [Service Mode] -> [CS Remove Care] -> [Maintenance/Default Settings] -> [System Selection], and touch [http1].
6. Inputting the ID code
   1. Select [Service Mode] -> [CS Remote Care] -> [Maintenance/Default Settings], and touch [ID Code].
   2. Input the seven digits ID of the service person, and touch [ID Code] again.

   I.11.13.2 Maintenance/Default Settings - ID Code
7. Setting the date and time for CS Remote Care
   1. Select [Service Mode] -> [CS Remote Care] -> [Maintenance/Default Settings], and touch [Detail Setting].
   2. Touch [Date & Time Setting].
   3. Input the date, time and the time zone using the 10-key pad, and touch [Set].

   I.11.13.3.(3) Date & Time Setting
8. Setting the Center ID
   1. Select [Service Mode] -> [CS Remote Care] -> [Maintenance/Default Settings], and touch [Detail Setting].
   2. Touch [Machine Setting] -> [Center ID], and input the Center ID (five digits).

   I.11.13.3.(1) Basic Setting (E-Mail1, E-Mail2, Modem or Fax)
9. Confirm the Device ID
   1. Select [Service Mode] -> [CS Remote Care] -> [Maintenance/Default Settings], and touch [Detail Setting].
   2. Touch [Machine Setting] -> [Device ID], and input Device ID (13 digits).

      NOTE
      - **[Device ID] displays the serial number that is entered in [Service Mode] -> [System 1] -> [Serial Number].**
10. Encryption setting
    1. Select [Service Mode] -> [CS Remote Care] -> [Maintenance/Default Settings], and touch [Detail Setting].
    2. Touch [Basic Setting] -> [Client Setting] and select either Encryption or No Encryption.
11. Heart Beat
    1. Select [Service Mode] -> [CS Remote Care] -> [Maintenance/Default Settings]] -> [Detail Setting] -> [Basic Setting], and touch [Heart Beat].
    2. In [Communication], set whether or not to enable Heart Beat communication. (Default: Yes)
    3. Touch [Comm. Interval] and enter a Heart Beat transmission interval (1 to 256 minutes, Default: 30 minutes).
    4. In [Specified Transmission], set whether or not to enable Heart Beat transmission at a specified interval. (Default: Yes)
    5. Touch [Hour] and [Minute] and enter a time for specified transmission.

       NOTE
       - **Heart Beat is a feature that uploads a Heart Beat file to the registered web server at a specified interval to report that the device is operating. Heart Beat files include total counter and status information.**
12. Setting the http server
    1. Select [Service Mode] -> [CS Remote Care], and touch [Server Settings].
    2. Touch [HTTP Server Settings] and set a URL address, account, password, and port number.
    3. Touch [SSL Settings] and make SSL settings.

    I.11.13.5 Maintenance/Default Settings - Server Setting (http1 or http2 is selected)
13. Setting the DIPSW for CS Remote Care

    NOTE
    - **This setting is not normally necessary. Take this step only when necessary in a specific connecting condition.**

14. Executing the initial transmission
    1. Select [Service Mode] -> [CS Remote Care] -> [Maintenance/Default Settings], and touch [Detail Setting].
    2. Touch [initial transmission] key on the right bottom of the screen to start initial transmission.

       NOTE
       - **The initial transmission key at the right bottom of the screen will be displayed only when the center ID, device ID and the URL address have been input.**
         However, if an invalid value is input as the device ID, the initial transmission key is not displayed.

    3. When the machine is properly connected with the center, CS Remote Care setting screen will be displayed.
    - If communication error between the machine and Center occurs, check the error code that appears.

(2) Unilateral communication: Device to Center

1. Register the device ID
   - Register the device ID to the application at CS Remote Care center.

     NOTE
     - **The initial connection is not available unless the device ID is registered.**
2. Remove the telephone line modem
   - Be sure to remove the telephone line modem when the http communication is used.
3. Inputting the ID code
   1. Select [Service Mode] -> [CS Remote Care] -> [Maintenance/Default Settings], and touch [ID Code].
   2. Input the seven digits ID of the service person, and touch [ID Code] again.

   I.11.13.2 Maintenance/Default Settings - ID Code
4. Clearing the RAM
   1. Select [Service Mode] -> [CS Remove Care] -> [Maintenance/Default Settings], and touch [Detail Setting].
   2. Touch [RAM Clear].
   3. Select Set, and touch [OK].

   I.11.13.3.(4) RAM Clear
5. Selecting the CS Remote Care function
   - Select [Service Mode] -> [CS Remove Care] -> [Maintenance/Default Settings] -> [System Selection], and touch [http2].

6. Inputting the ID code
   1. Select [Service Mode] -> [CS Remote Care] -> [Maintenance/Default Settings], and touch [ID Code].
   2. Input the seven digits ID of the service person, and touch [ID Code] again.

   I.11.13.2 Maintenance/Default Settings - ID Code
7. Setting the date and time for CS Remote Care
   1. Select [Service Mode] -> [CS Remote Care] -> [Maintenance/Default Settings], and touch [Detail Setting].
   2. Touch [Date & Time Setting].
   3. Input the date, time and the time zone using the 10-key pad, and touch [Set].

   I.11.13.3.(3) Date & Time Setting
8. Setting the Center ID
   1. Select [Service Mode] -> [CS Remote Care] -> [Maintenance/Default Settings], and touch [Detail Setting].
   2. Touch [Machine Setting] -> [Center ID], and input the Center ID (five digits).

   I.11.13.3.(1) Basic Setting (E-Mail1, E-Mail2, Modem or Fax)
9. Confirm the Device ID
   1. Select [Service Mode] -> [CS Remote Care] -> [Maintenance/Default Settings], and touch [Detail Setting].
   2. Touch [Machine Setting] -> [Device ID], and input Device ID (13 digits).

      NOTE
      - **[Device ID] displays the serial number that is entered in [Service Mode] -> [System 1] -> [Serial Number].**
10. Encryption setting
    1. Select [Service Mode] -> [CS Remote Care] -> [Maintenance/Default Settings], and touch [Detail Setting].
    2. Touch [Basic Setting] -> [Client Setting] and select either Encryption or No Encryption.
11. Heart Beat
    1. Select [Service Mode] -> [CS Remote Care] -> [Maintenance/Default Settings] -> [Detail Setting] -> [Basic Setting], and touch [Heart Beat].
    2. In [Communication], set whether or not to enable Heart Beat communication. (Default: Yes)
    3. Touch [Comm. Interval] and enter a Heart Beat transmission interval (1 to 256 minutes, Default: 30 minutes).
    4. In [Specified Transmission], set whether or not to enable Heart Beat transmission at a specified interval. (Default: Yes)
    5. Touch [Hour] and [Minute] and enter a time for specified transmission.

       NOTE
       - **Heart Beat is a feature that uploads a Heart Beat file to the registered web server at a specified interval to report that the device is operating. Heart Beat files include total counter and status information.**
12. Notification Setting
    1. Select [Service Mode] -> [CS Remote Care] -> [Maintenance/Default Settings] -> [Detail Setting], and touch [Notification Setting].
    2. Touch [Schedule] and set the schedule of periodic transmission.
    3. Touch [Center Notifi. Item] and set items that will be reported to the Center.

    I.11.13.3.(9) Notification Setting
13. Setting the http server
    1. Select [Service Mode] -> [CS Remote Care], and touch [Server Set].
    2. Touch [HTTP Server Settings] and set a URL address, account, password, and port number.
    3. Touch [SSL Settings] and make SSL settings.

    I.11.13.5 Maintenance/Default Settings - Server Setting (http1 or http2 is selected)
14. Setting the DIPSW for CS Remote Care

    NOTE
    - **This setting is not normally necessary. Take this step only when necessary in a specific connecting condition.**

15. Executing the initial transmission
    1. Select [Service Mode] -> [CS Remote Care] -> [Maintenance/Default Settings], and touch [Detail Setting].
    2. Touch [initial transmission] key on the right bottom of the screen to start initial transmission.

       NOTE
       - **The initial transmission key at the right bottom of the screen will be displayed only when the center ID, device ID and the URL address have been input.**
         However, if an invalid value is input as the device ID, the initial transmission key is not displayed.

    3. When the machine is properly connected with the center, CS Remote Care setting screen will be displayed.
    - If communication error between the machine and Center occurs, check the error code that appears.

11.8 Software SW setting for CS Remote Care

NOTE
- **Software SW bits data are written into the memory region on the MFP board every time a change is made. In case you changed bit data by accident, be sure to restore the previous state.**
- **Do not change any bit not described on this table.**

11.8.1 Input procedure

1. Select [Service Mode] -> [CS Remote Care] -> [Maintenance/Default Settings] -> [Detail Setting], and touch [Software Switch Setting].
2. Touch [Switch No.], and input the switch number (two digits) using the 10-key pad.
3. Touch [Bit Assignment], and select switch bit number using the arrow keys, and input 0 or 1 using the 10-key pad.
   (For setting by hexadecimal numbers, touch [HEX Assignment] key, and input using the 10-key pad or A to F keys.)
4. Touch [Fix].

NOTE
- **About functions of each switch, see to "I.11.8.2 List of software SW for CS Remote Care"**

11.8.2 List of software SW for CS Remote Care

SW No.	Functions	Ref. page
01	Dial Mode, Line for send only, Baud rate	I.11.8.3 SW No. 01

SW No.	Functions		Ref. page
02	Emergency transmission, Date specified transmission, Call parts replace date, Call drum replace date, Call regular service date (PM), Auto call on the Drum Unit Life, Auto call of the IR shortage, Auto call on the zero reset of the fixed parts replacement		I.11.8.4 SW No. 02
03	Trouble display setting, Auto call on the toner empty, Auto call on the waste toner bottle full		I.11.8.5 SW No. 03
04	CS Remote Care communication mode		I.11.8.6 SW No. 04
05	Modem redial interval		I.11.8.7 SW No. 05
06	Modem redial times		I.11.8.8 SW No. 06
07	Redial for response time out		I.11.8.9 SW No. 07
08	Retransmission interval on E-Mail/http delivery error		I.11.8.10 SW No. 08
09	Retransmission times on E-Mail/http delivery error		I.11.8.11 SW No. 09
10	Time zone settings		I.11.8.12 SW No. 10
11	Timer 1 RING reception -> CONNECT reception		I.11.8.13 SW No. 11
12	Timer 2 Dial request completed -> CONNECT reception		I.11.8.14 SW No. 12
13	Reservation		-
14	Timer 4 Line connection -> Start request telegram delivery		I.11.8.15 SW No. 14
15	Timer 5 Wait time for other side's response		I.11.8.16 SW No. 15
16	Reservation		-
17	Reservation		-
18	Attention display	To set whether to give the alarm display when using the modem but the power for the modem is OFF.	I.11.8.17 SW No. 18
19	Reservation		-
20	Reservation		-
21	Automatic transmission of chronological misfeed data at the time of transmission of misfeed frequent occurrence warning, transmission of paper-based misfeed frequent occurrence warning, transmission of original-based misfeed frequent occurrence warning		I.11.8.18 SW No. 21
22	Paper-based misfeed frequent occurrence threshold value		I.11.8.19 SW No. 22
23	Original-based misfeed frequent occurrence threshold value		I.11.8.20 SW No. 23
24 : 40	Reservation		-

11.8.3 SW No. 01

(1) Default

Bit	7	6	5	4	3	2	1	0
	1	0	0	0	0	0	0	1
HEX	81							

(2) Functions

Bit	Functions	Logic		Description
		0	1	
7	Baud rate	0110		9600 bps
6		0111		19.2 Kbps
5		"1000"		38.4 Kbps
4		Other		Not available
3	Reservation			
2				
1	Line for send only	"Disable"	Enable	
0	Dial Mode	Pulse	"Tone"	

11.8.4 SW No. 02

(1) Default

Bit	7	6	5	4	3	2	1	0
	1	1	1	1	1	1	1	1
HEX	FF							

(2) Functions

Bit	Functions	Logic		Description
		0	1	
7	Auto call on the zero reset of the fixed parts replacement	Disable	“Enable”	
6	Auto call of the IR shortage	Disable	“Enable”	
5	Auto call on the Drum Unit Life	Disable	“Enable”	
4	Call regular service date (PM)	Disable	“Enable”	
3	Call drum replace date	Disable	“Enable”	
2	Call parts replace date	Disable	“Enable”	
1	Date specified transmission	Disable	“Enable”	
0	Emergency transmission	Disable	“Enable”	

11.8.5 SW No. 03

(1) Default

Bit	7	6	5	4	3	2	1	0
	0	0	0	0	1	0	1	0
HEX	0A							

(2) Functions

Bit	Functions	Logic		Description
		0	1	
7	Reservation			
6				
5				
4				
3	Auto call on the waste toner bottle full	Disable	“Enable”	
2	Reservation			
1	Auto call on the toner empty	Disable	“Enable”	
0	Trouble Display setting	“When the CSRC is not connected”	When the CSRC is connected	Select the type of message to be displayed at the time of automatic trouble notification made when the CSRC is connected, either the message when the CSRC is connected or that when the CSRC is not connected.

11.8.6 SW No. 04

(1) Default

Bit	7	6	5	4	3	2	1	0
	0	0	0	0	0	0	1	0
HEX	02							

(2) Functions

Bit	Functions	Logic		Description
		0	1	
7	Reservation			
6				
5				
4				
3				
2				
1	CS Remote Care communication mode	00		DATA
0		01		FAX
		“10”		E-mail
		11		Not available

11.8.7 SW No. 05

(1) Default

Bit	7	6	5	4	3	2	1	0
	0	0	0	0	0	0	1	1
HEX	03							

(2) Functions

Bit	Functions	Logic		Description
		0	1	
7	Reservation			
6				
5				
4	Modem redial interval	00001		1 minute
3		00010		2 minutes
2		“00011”		3 minutes
1		00100		4 minutes
0		00101		5 minutes
		00110		6 minutes
		00111		7 minutes
		01000		8 minutes
		01001		9 minutes
		01010		10 minutes
		Others		Not available

11.8.8 SW No. 06

(1) Default

Bit	7	6	5	4	3	2	1	0
	0	0	0	0	1	0	1	0
HEX	0A							

(2) Functions

Bit	Functions	Logic		Description
		0	1	
7	Modem redial times	0000 0000		0 time
6		0000 0001		1 time
5		:		:
4		“0000 1010”		10 times
3		:		:
2		0110 0010		98 times
1		0110 0011		99 times
0		Others		Not available

11.8.9 SW No. 07

(1) Default

Bit	7	6	5	4	3	2	1	0
	0	0	0	0	0	0	0	1
HEX	01							

(2) Functions

Bit	Functions	Logic		Description
		0	1	
7	Redial for response time out	0000 0000		0 time
6		“0000 0001”		1 time
5		Others		Not available
4				
3				
2				
1				

Bit	Functions	Logic		Description
		0	1	
0				

11.8.10 SW No. 08

(1) Default

Bit	7	6	5	4	3	2	1	0
	0	0	0	0	0	1	1	0
HEX	06							

(2) Functions

Bit	Functions	Logic		Description
		0	1	
7	Retransmission interval on E-mail/http delivery error	0000 0000		0 minute
6		0000 0001		10 minutes
5		:		:
4		“0000 0110”		60 minutes
3		:		:
2		0000 1011		110 minutes
1		0000 1100		120 minutes
0		Others		Not available

11.8.11 SW No. 09

(1) Default

Bit	7	6	5	4	3	2	1	0
	0	0	0	0	1	0	1	0
HEX	0A							

(2) Functions

Bit	Functions	Logic		Description
		0	1	
7	Retransmission times on E-mail/http delivery error	0000 0000		0 time
6		0000 0001		1 time
5		:		:
4		“0000 1010”		10 times
3		:		:
2		0110 0010		98 times
1		0110 0011		99 times
0		Others		Not available

11.8.12 SW No. 10

(1) Default

Bit	7	6	5	4	3	2	1	0
	0	0	0	0	0	0	0	0
HEX	00							

(2) Functions

Bit	Functions	Logic		Description
		0	1	
7	Time zone settings	“0000 0000”		-12 hours
6		0000 0001		-11 hours
5		:		:
4		0110 0010		+12 hours
3		0001 1010		+13 hours
2		Others		Not available
1				
0				

11.8.13 SW No. 11

(1) Default

Bit	7	6	5	4	3	2	1	0
	0	0	1	0	0	0	0	0
HEX	20							

(2) Functions

Bit	Functions	Logic		Description
		0	1	
7	• Timer 1 • RING reception -> CONNECT reception	0000 0000		0 sec
6		0000 0001		1 sec
5		:		:
4		“0010 0000”		32 sec
3		:		:
2		1111 1110		254 sec
1		1111 1111		255 sec
0				

11.8.14 SW No. 12

(1) Default

Bit	7	6	5	4	3	2	1	0
	0	1	0	0	0	0	0	0
HEX	40							

(2) Functions

Bit	Functions	Logic		Description
		0	1	
7	• Timer 2 • Dial request completed -> CONNECT reception	0000 0000		Not available
6		0000 0001		1 sec
5		:		:
4		“0100 0000”		64 sec
3		:		:
2		1111 1110		254 sec
1		1111 1111		255 sec
0				

11.8.15 SW No. 14

(1) Default

Bit	7	6	5	4	3	2	1	0
	0	0	1	0	0	0	0	0
HEX	20							

(2) Functions

Bit	Functions	Logic		Description
		0	1	
7	• Timer 4 • Line connection -> Start request telegram delivery	0000 0001		100 msec
6		:		:
5		“0010 0000”		3,200 msec
4		:		:
3		1111 1110		25,400 msec
2		1111 1111		25,500 msec
1				
0				

11.8.16 SW No. 15

(1) Default

Bit	7	6	5	4	3	2	1	0
	0	0	0	1	1	1	1	0

HEX	1E

(2) Functions

Bit	Functions	Logic		Description
		0	1	
7	• Timer 5 • Wait time for other side's response	0000 0001		1 sec
6		:		:
5		"0001 1110"		30 sec
4		:		:
3		1111 1110		254 sec
2		1111 1111		255 sec
1				
0				

11.8.17 SW No. 18

(1) Default

Bit	7	6	5	4	3	2	1	0
	0	0	0	0	0	0	0	1
HEX	01							

(2) Functions

Bit	Functions		Logic		Description
			0	1	
7	Reservation				
6					
5					
4					
3					
2					
1					
0	Attention display	To set whether to give the alarm display when using the modem but the power for the modem is OFF.	OFF	"ON"	

11.8.18 SW No. 21

(1) Default

Bit	7	6	5	4	3	2	1	0
	0	0	0	0	0	0	0	0
HEX	00							

(2) Functions

Bit	Functions	Logic		Description
		0	1	
7	Reservation			
6				
5				
4				
3				
2	Automatic transmission of chronological misfeed data at the time of transmission of misfeed frequent occurrence warning	OFF	"ON"	
1	Original-based misfeed frequent occurrence threshold value	OFF	"ON"	If the number of jams exceeds the threshold specified per day (0:00 to 23:59), Jam Frequent Occurrence Warning is sent. At 12 a.m. of the next day, the counter is reset.
0	Paper-based misfeed frequent occurrence threshold value	OFF	"ON"	

11.8.19 SW No. 22

(1) Default

Bit	7	6	5	4	3	2	1	0
	0	0	0	0	0	1	0	1
HEX	05							

(2) Functions

Bit	Functions	Logic		Description
		0	1	
7	Paper-based misfeed frequent occurrence threshold value	0000 0001		1
6		0000 0010		2
5		:		:
4		“0000 0101”		5
3		:		:
2		0000 1110		14
1		0000 1111		15
0		Others		Not available

11.8.20 SW No. 23

(1) Default

Bit	7	6	5	4	3	2	1	0
	0	0	0	0	0	1	0	1
HEX	05							

(2) Functions

Bit	Functions	Logic		Description
		0	1	
7	Original-based misfeed frequent occurrence threshold value	0000 0001		1
6		0000 0010		2
5		:		:
4		“0000 0101”		5
3		:		:
2		0000 1110		14
1		0000 1111		15
0		Others		Not available

11.9 Setup confirmation

- Follow the steps below to make sure that CS Remote Care has been properly set up.

1. Call the Service Mode to the screen.
2. Touch [CS Remote Care].
3. Check to make sure that only selected item is displayed.

11.10 Calling the maintenance

- When CE starts maintenance, inputting the ID code of CE (seven digits: numbers which CE can identify. They are controlled by the distributor.) will transmit the information to the Center side and tells that the maintenance has started. When the maintenance is finished, touching [Maintenance Complete] key will transmit the information to the center and tells that it is finished.

NOTE

- **The MFP sends the maintenance start information to the Center. While the MFP is in maintenance mode, the communication between the MFP and the Center is unavailable.**
  Therefore, CE must touch [Maintenance Complete] immediately after the completion of maintenance to end maintenance mode.

11.10.1 When starting the maintenance

1. Select Service Mode and touch [CS Remote Care].
2. Touch [Maintenance Start].
3. Input the ID code using the 10-key pad.
4. Select estimated hours that elapse before the completion of the maintenance from the options of [2 hours], [4 hours], [6 hours], [8 hours], [10 hours], or [12 hours].
5. Touch [OK].

NOTE

- **The Start key blinks while maintenance mode is being carried out.**
- **You cannot extend the estimated hours while the maintenance is in progress.**

- **If you forget to touch [Maintenance Complete] after the completion of the maintenance, the maintenance completion information is automatically sent after the lapse of the selected estimated hours and the normal communication becomes available.**

11.10.2 When finishing the maintenance

1. Select Service Mode and touch [CS Remote Care].
2. Touch [Maintenance Complete].

11.11 Calling the center from the administrator

- When the CS Remote Care setup is complete, the administrator can call the CS Remote Care center.

1. Select [Administrator Settings], and touch [System Connection].
2. Touch [Admin. transmission].
3. Press the Start key.
   When the setup is not complete or another transmission is being carried out, the Admin. transmission key will not be displayed, and the transmission is not available.

NOTE

- **For transmitting data of the machine by calling the center on the specified date and time, refer to the manual for CS Remote Care center.**

11.12 Checking the transmission log

- The transmission log list will be output to be checked.

1. Select [Service Mode] -> [CS Remote Care] -> [Maintenance/Default Settings], and touch [Detail setting].
2. Touch [Communication Log Print].
3. Load tray 1 or bypass tray with A4S paper.
4. Press the Start key to output transmission log.

11.13 Detail on settings for CS Remote Care

11.13.1 Maintenance/Default Settings - System Selection

(1) Use

- To select the system type for remote diagnosis.
- Use to newly build or change the system.

(2) Setting range

- E-Mail1
- E-Mail2
- Modem
- Fax
- http1
- http2

(3) Procedure

- Select [E-Mail 1], [E-Mail 2], [http 1], [http 2], [Modem], or [Fax].
- Fax is available only when the optional fax kit is being installed.

11.13.2 Maintenance/Default Settings - ID Code

(1) Use

- To register the service ID.
- Use when registering and changing service ID.

(2) Procedure

1. Touch [ID code] and enter the service ID.
   - Enter a 7-digit code from the 10-key pad. (0000001 to 9999999)
2. Touch [ID code] to register the ID.
3. The [Detail Setting] will appear when the ID has been registered.

11.13.3 Maintenance/Default Settings - Detail Setting

(1) Basic Setting (E-Mail1, E-Mail2, Modem or Fax)

(a) Use

- Execute the primary setting.
- Use to change the set contents.
- Use to register the machine to the CS Remote Care center.

(b) Procedure

1. Call the Service Mode to the screen.
2. Touch [CS Remote Care] -> [Maintenance/Default Settings].
3. Touching the [Detail Setting] will display the primary setting.

<Center Setting>

- Set the center ID, Device ID, and the phone No.
- When e-mail is selected for system and all setup procedures are completed, e-mail address of the center is displayed.
  * When entering the phone number, 10-key and keys on the screen have following meanings.

[-] Pose	Waits to start transmitting after dialing
[W] Wait	Detects the dial tone of the other end
[T] Tone dial	Carry out tone dialing
[P] Pulse dial	Carry out pulse dialing
[*], [#]	To be used as necessary

<Schedule (Only when the [E-Mail2] is selected)>
- Set the schedule of notification to the center.
- Up to three different notification schedules can be registered.
- Select the notification cycle from [Day], [Week], or [Month].
  When selecting [Day] for the notification cycle, set the Day Frequency.
  When selecting [Week] for the notification cycle, set the Week Frequency and day of the week.
  When selecting [Month], set the Month Frequency and the date of the month.

<Center Notification (Only when the [E-Mail2] is selected)>
- Select the items of data that will be sent to the center in one-way transmission through E-Mail2.
- The following table shows each of the notification item keys and corresponding data.

[1]	Sales count data	[7]	EKC data
[2]	Error count data	[8]	Adjustment data
[3]	Service count data	[9]	Coverage data
[4]	Life count data Life cycle data	[10]	Not used
[5]	CSRC-System data Device config data	[11]	Not used
[6]	History data	[12]	Not used

NOTE
- **Multiple items of data can be selected and sent at one time. However, be sure that only EKC data cannot be sent together with other items of data.**

<Initial Transmission>
- Touching the Initial Transmission key will sent the information to the CS Remote Care center to register the machine.
  (Only when the modem or fax is selected on the system Input.)

(2) Basic Setting (http1 or http2)

(a) Use

- Execute the primary setting.
- Use to change the set contents.
- Use to register the machine to the CS Remote Care center.

(b) Procedure

1. Call the Service Mode to the screen.
2. Touch [CS Remote Care] -> [Maintenance/Default Settings].
3. Touching the [Detail Setting] -> [Basic Setting] will display the primary setting.

<Center Setting>
- Set the center ID.
- Display the device ID.

<Client Setting>
- To set whether or not to encrypt communication.

<Heart Beat>
- To make Heart Beat related settings.
- Heart Beat is a feature that uploads a Heart Beat file to the registered web server at a specified interval to report that the device is operating. Heart Beat files include total counter and status information.

<Initial Transmission>
- Touching the Initial Transmission key will sent the information to the CS Remote Care center to register the machine.

(3) Date & Time Setting

(a) Use

- To set the data and time-of-day.
- Use to set or change the date and time-of-day.

(b) Procedure

1. Call the Service Mode to the screen.
2. Touch [CS Remote Care] -> [Maintenance/Default Settings].
3. Touch [Detail Setting] -> [Date & Time Setting] to access Date & Time Setting.
4. Enter the date (month, day and year), time-of-day, and the time zone from the 10-key pad.
5. Touch [SET] to start the clock.

(4) RAM Clear

(a) Use

- To clear the following data at the center.
- To be used for setting CS Remote Care.
- To be used for reset the every data of the center to default.

NOTE
- **If RAM clear is selected during transmission, RAM clear processing will be implemented at the time the transmission is completed regardless of whether it is done properly or not.**

(b) Default setting
- Unset

(c) Setting item
- Set
- "Unset"

(5) Communication Log Print
(a) Use
- To print out the communication log.
- Use to output and use the communication log.

(b) Procedure
1. Call the Service Mode on the screen.
2. Touch [CS Remote Care] -> [Maintenance/Default Settings].
3. Touch [Detail Setting] -> [Communication Log Print] to access communication log print.
4. Load a paper tray with A4S/A4 or $8^1/_2$ x 11S/$8^1/_2$ x 11 paper.
5. Press Start key to print out the communication log.

(6) Software Switch Setting
(a) Use
- To change the CS Remote Care settings.

(b) Procedure
- Refer to "I.11.8 Software SW setting for CS Remote Care" for the setting.

(7) Response Time Out
(a) Use
- It sets the intervals for resending e-mails when transmission error occurred.
- It can be set only when [E-Mail] is selected in [System Setting].
- To use when changing the intervals for resending e-mails when transmission error occurred.

(b) Default setting
- 60 minute

(c) Setting range
- 10 to 1440

(8) AT Command
(a) Use
- To set the command to be issued at the time of modem initialization.
- This setting is available only when [Modem] is selected in [System Setting].

(b) Procedure
- Enter the command and touch [SET] to register.

(9) Notification Setting
(a) Use
- To make the settings of notification to the center that is performed under unilateral communication via http.
- This setting is available only when [http2] is selected in [System Setting].

(b) Procedure
<Schedule>
- Set the schedule of notification to the center.
- Up to three different notification schedules can be registered.
- Select the notification cycle from [Day], [Week], or [Month].
  When selecting [Day] for the notification cycle, set the Day Frequency.
  When selecting [Week] for the notification cycle, set the Week Frequency and day of the week.
  When selecting [Month], set the Month Frequency and the date of the month.

<Center Notifi. Item>
- The following table shows each of the notification item keys and corresponding data.

[1]	Sales count data	[7]	EKC data
[2]	Error count data	[8]	Adjustment data

[3]	Service count data	[9]	Coverage data
[4]	Life count data Life cycle data	[10]	Not used
[5]	CSRC-System data Device config data	[11]	Not used
[6]	History data	[12]	Not used

NOTE
- **Multiple items of data can be selected and sent at one time. However, be sure that only EKC data cannot be sent together with other items of data.**

11.13.4 Maintenance/Default Settings - Server Setting (E-Mail1 or E-mail2 is selected.)

(1) Server for RX-POP3 server

(a) Use

- To set the POP3 server address used for the CS Remote Care.
- To set the address of the POP3 Server.
- POP3 server address can be set with IP address or the domain name.

(b) Procedure

<Input IP Address>
- IP address version 4 format
  [0 to 255].[0 to 255].[0 to 255].[0 to 255]

<FQDN Input>
- Enter the domain name.

(2) Server for RX-POP3 login name

(a) Use

- To set the login name for the POP3 server used for the CS Remote Care.

(b) Procedure

- Up to 64 characters (alphanumeric characters and symbols) can be used.

(c) Default setting

- No

(3) Server for RX-POP3 password

(a) Use

- To set the logon password for the POP3 server used for the CS Remote Care.

(b) Procedure

- Up to 15 characters (alphanumeric characters and symbols) can be used.

(c) Default setting

- No

(4) Server for RX-POP3 port number

(a) Use

- To set the POP3 port number used for the CS Remote Care.

(b) Default setting

- 110

(c) Setting range

- 1 to 65535

(5) Receive-E-Mail Address

(a) Use

- To set the e-mail address used for the CS Remote Care.

(b) Procedure

- Up to 129 characters (alphanumeric characters and symbols) can be used.

(c) Default setting

- No

(6) Receive-Mail Check

(a) Use

- To set whether or not to use mail check and the time interval for the POP server used for the CS Remote Care.
- To change the time interval for mail check.

(b) Default setting

- No

(c) Setting item

- “No”
- 1 to120 min.

(7) Receive-Connection Time-out

(a) Use

- To set the timeout period for connection during reception.

(b) Default setting

- 60 Sec

(c) Setting range

- 30 to 300 Sec

(8) Receive-APOP Authentication

(a) Use

- To set whether or not to authenticate the APOP during reception.

(b) Default setting

- No

(c) Setting item

- Yes
- “No”

(9) Send-SMTP server

(a) Use

- To set the SMTP sever address for transmission used for the CS Remote Care.
- SMTP server address can be set by the IP address or the domain name.

(b) Procedure

<Input IP Address>

- IP address version 4 format
  [0 to 255].[0 to 255].[0 to 255].[0 to 255]

<FQDN Input>

- Enter the domain name.

(10) Send-SMTP port number

(a) Use

- To set the SMTP port number for transmission used for the CS Remote Care.

(b) Default setting

- 25

(c) Setting range

- 1 to 65535

(11) Send- Connection Time-out

(a) Use

- To set the timeout period for transmission.

(b) Default setting

- 60 Sec

(c) Setting range

- 30 to 300 Sec

(12) Send-Authentication Setting

(a) Use

- To set whether or not to authenticate during transmission via SMTP server.
- To use when authenticating during transmission.
  Available authentication mode: POP Before SMTP, SMTP authentication

(b) Default setting

- OFF

(c) Setting item

- "OFF"
- POP Before SMTP
- SMTP Authentication

NOTE

- **Setting to "POP Before SMTP" will set the time for POP Before SMTP.**
  - **Default setting: 60 Sec**
  - **Setting range: 0 to "60 Sec"**
  - **When setting to SMTP authentication, touch the "Setting Check" key for authentication.**

User ID	**Enter the user ID for SMTP authentication.**
Password	**Enter the password for SMTP authentication.**
Domain name	**Enter the domain name for SMTP authentication.**

(13) TX/RX Test

(a) Use

- To determine the correct transmission and reception using CS Remote Care.

(b) Procedure

1. Press the Start key to let the machine start the transmission and reception test.
2. The test procedure and result will be displayed on the screen.

(14) Data Initialization

(a) Use

- To initialize the contents for the sever setting.

(b) Default setting

- No

(c) Setting item

- Yes
- "No"

11.13.5 Maintenance/Default Settings - Server Setting (http1 or http2 is selected)

(1) HTTP Server Settings

(a) Use

- To set a http server at the other end that is used in CS Remote Care.

(b) Procedure

<URL>
- To set the address of the http server.

<Account>
- To set an account that is used to access the http server.

<Password>
- To set a password that is used to access the http server.

<Port Number>
- To set a port number that is used to access the http server.

(2) SSL Settings

(a) Use

- To make SSL settings of the http server at the other end that is used in CS Remote Care.

(b) Procedure

- To set whether or not to use SSL communication.

(3) Data Initialization

(a) Use

- To initialize values in the server settings.

(b) Default setting

- No

(c) Setting item

- Yes
- "No"

11.13.6 Product Auth. Settings

(1) Product Authentication

(a) Use

- To set whether or not to enable product authentication.

NOTE

- **When changing this setting under the condition where http is used for CS Remote Care communication, you need to perform RAM Clear and then initial transmission again.**

(b) Default setting

- No

(c) Setting item

- Yes
- “No”

(2) WebDAV

(a) Use

- To set a WebDAV server for the product authentication.

(b) Procedure

<URL>

- To set the address of the WebDAV server.

<Account>

- To set an account that is used to access the WebDAV server.

<Password>

- To set a password that is used to access the WebDAV server.

<Port Number>

- To set a port number that is used to access the WebDAV server.

(3) Register Manually

(a) Use

- To install the certificate to be used in product authentication.

(b) Procedure

<LMS>

1. Call the Service Mode to the screen.
2. Touch [CS Remote Care] -> [Product Auth. Settings].
3. Touch [Register Manually] -> [LMS].
4. Touch [Start] to communicate with LMS (License Management System) and install the certificate.
5. Check that the "Install OK" message appears.

<USB>

1. Connect the USB flash drive where the certificate obtained from LMS (License Management System) is stored to the USB port of MFP.
2. Call the Service Mode to the screen.
3. Touch [CS Remote Care] -> [Product Auth. Settings].
4. Touch [Register Manually] -> [USB].
5. Touch [Start] to install the certificate.
6. Check that the "Install OK" message appears.

11.13.7 Import/Export Settings

(1) WebDAV Setting

(a) Use

- To configure WebDAV server settings used to remotely export or import MFP data (address book data, authentication setting data).

(b) Procedure

<URL>

- To set the address of the WebDAV server.

<Folder Name>

- To set a folder name of the WebDAV server that is used to transfer data.

<Account>

- To set an account that is used to access the WebDAV server.

<Password>
- To set a password that is used to access the WebDAV server.

(2) Port Number

(a) Use

- To set a port number that is used to access the WebDAV server.

(b) Procedure

- Set the port number of the WebDAV server using the 10-key pad.

(3) SSL Settings

(a) Use

- To configure the WebDAV server's SSL settings.

(b) Default setting

- No

(c) Setting item

- Yes
- "No"

(4) Data Initialization

(a) Use

- To initialize the settings on the server.

(b) Default setting

- No

(c) Setting item

- Yes
- "No"

11.14 System 1

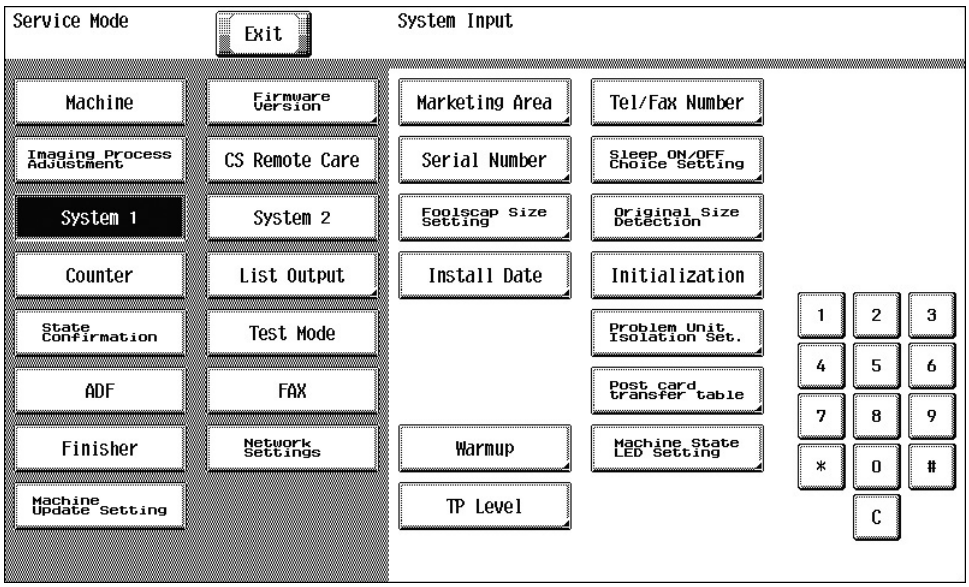

11.14.1 Marketing Area

(1) Use

- To make the various settings (language, paper size, fixed zoom ratios, etc.) according to the applicable marketing area.
- Upon setup.

(2) Procedure

Marketing Area

- Select the applicable marketing area and touch [END] to set the marketing area.

Wireless LAN Destination (This is displayed only when the optional upgrade kit UK-208 and UK-209 are installed)

1. Touch the [Wireless LAN Destination].
2. Select the applicable marketing area using [+] and [-] keys, and touch [END].

Fax Target

1. Touch the [Fax Target].

2. Select the applicable marketing area using [+] and [-] keys, and touch [END].

(3) Setting item

Marketing Area
- Japan
- US
- Europe
- Others1 to 5

Wireless LAN Destination
- OT, US, CA, JP, AU, NZ, EU, DE, GB, FR, CH, NL, BE, AT, NO, SE, FI, IE, DK, IT, ES, PT, PL, ZA, TW, SA, CN, MY, SG, KR, HK, AR, BR, VN, PH, RU

Fax Target
- JP, AU, NZ, EU, DE, GB, FR, CH, NL, BE, AT, NO, SE, FI, IE, DK, IT, ES, PT, PL, ZA, TW, SA, CN, MY, SG, KR, HK, AR, BR, VN, PH, RU, OT, US, CA

(a) List of functions affected by marketing area setting

- The listed are the functions of which setting is automatically changed depending on the selected marketing area.

Marketing area / Setting item		Japan	US	Europe	Others1	Others2	Others3	Others4	Others5
Language (Default value)		Japanese	English	English	English	English	Simplified Chinese	Traditional Chinese	English
Language Selection (Selectable language)		• Japanese • English • French • Italian • German • Spanish • Simplified Chinese • Traditional Chinese • Hangul	• English • French • Italian • German • Spanish • Japanese • Simplified Chinese • Traditional Chinese • Hangul	• English • French • Italian • German • Spanish • Japanese • Simplified Chinese • Traditional Chinese • Hangul	• English • French • Italian • German • Spanish • Japanese • Simplified Chinese • Traditional Chinese • Hangul	• English • French • Italian • German • Spanish • Japanese • Simplified Chinese • Traditional Chinese • Hangul	• English • French • Italian • German • Spanish • Japanese • Simplified Chinese • Traditional Chinese • Hangul	• English • French • Italian • German • Spanish • Japanese • Simplified Chinese • Traditional Chinese • Hangul	• English • French • Italian • German • Spanish • Japanese • Simplified Chinese • Traditional Chinese • Hangul
Foolscap size		8 x 13	8 x 13	8 x 13	8 x 13	8 x 13	8 x 13	8 x 13	8 x 13
LCT(Built-in) size		A4 LEF	Letter LEF	A4 LEF	A4 LEF	A4 LEF	A4 LEF	A4 LEF	A4 LEF
LCT size		A4 LEF	Letter LEF	A4 LEF	A4 LEF	A4 LEF	A4 LEF	A4 LEF	A4 LEF
Unit		Metric	Inch	Metric	Metric	Metric	Metric	Metric	Metric
Registered Key Settings	Registered Key 1	User Box	Scan/Fax	Scan/Fax	Scan/Fax	Scan/Fax	Scan/Fax	Scan/Fax	Scan/Fax
	Registered Key 2	Scan/Fax	Copy	Copy	Copy	Copy	Copy	Copy	Copy
	Registered Key 3	Copy	10 keypad	10 keypad	10 keypad	10 keypad	10 keypad	10 keypad	10 keypad
Total counter mode		Mode1	Mode2	Mode2	Mode2	Mode2	Mode2	Mode2	Mode2
Size counter		No count	• A3 • 11 x 17	• A3 • B4 • 11 x 17 • 8 1/2 x 14	• A3 • B4 • 11 x 17 • 8 1/2 x 14	• A3 • B4 • 11 x 17 • 8 1/2 x 14	• A3 • B4 • 11 x 17 • 8 1/2 x 14	• A3 • B4 • 11 x 17 • 8 1/2 x 14	• A3 • B4 • 11 x 17 • 8 1/2 x 14
Unit Change		Japan	US	Europe	Europe	Europe	Europe	Europe	Europe

NOTE
- **The language used in the service mode depends on the Language Selection setting, and changes to the language as following table.**

Language Selection	Service Mode
Japanese	**Japanese**
Simplified Chinese	**Simplified Chinese**
Traditional Chinese	**Traditional Chinese**
Hangul	**Hangul**
Language other than listed above	**English**

11.14.2 Tel/Fax Number

(1) Use

- To enter the tel/fax number of the service contact that will appear on the control panel when a malfunction occurs in the machine.
- Upon setup.

(2) Procedure

- Enter the tel/fax number (19 digits) from the 10-key pad.
- Use Interrupt key to enter "-."

11.14.3 Serial Number

(1) Use

- To register the serial numbers of the machine and options.
- The numbers will be printed on the list output.
- To use the serial number as device ID during CS Remote Care communication.
- Upon setup.

NOTE

- **When main power switch was turned ON while the serial No. was not entered, the message to require entering the serial No. will be displayed.**
- **Do not change the serial number registered in the machine. If memory data is lost and entering the serial number is required, enter the original correct serial number. Be careful to enter the correct serial number since characters other than alphanumeric can be also entered. CSRC communication is not available if a wrong serial number is entered.**
- **The serial number of "Printer" can be checked through the following: Menu -> [Counter].**

(2) Procedure

- Type the serial numbers.
  Printer, Scanner, ADF, LCT, Output Option, Duplex, Vendor, RU, ZU, Fax1, Fax2, Fax3, Fax4

11.14.4 Sleep ON/OFF Choice Setting

(1) Use

- To display the option of "OFF" for the sleep mode setting screen available from [Administrator Settings] -> [System Settings] -> [Power Supply/Power Save Settings].

NOTE

- **The sleep mode will begin in 48 hours even if it sets it to "OFF."**

(2) Default setting

- Prohibit

(3) Setting item

- Permit
- "Prohibit"

11.14.5 Foolscap Size Setting

(1) Use

- To set the size for foolscap paper.
- Upon setup.

(2) Procedure

- Select a size to use from six size patterns.

(3) Default setting

- 8×13

(4) Setting item

- $8\frac{1}{2} \times 13\frac{1}{2}$
- 220 x 330 mm
- $8\frac{1}{2} \times 13$
- $8\frac{1}{4} \times 13$
- $8\frac{1}{8} \times 13\frac{1}{4}$
- 8 x 13

NOTE

- **"$8\frac{1}{8} \times 13\frac{1}{4}$" and "220 x 330 mm" setting are corresponding to paper fed from the manual bypass tray only.**

11.14.6 Original Size Detection

(1) Copy Glass

(a) Use

- To change the size detection table for the document glass.

(b) Default setting

- The default setting varies depending on the marketing area.

(c) Setting item

- "Table1"
- Table2

NOTE

- **Table 2 can be set only when original size sensor 2 is being mounted.**

(2) $8^1/_2$ x 14/Foolscap Size Detection

(a) Use

- To set whether paper of $8^1/_2$ x $13^1/_2$ size is detected as $8^1/_2$ x 14 or foolscap in original glass or DF size detection.
- When Table 1 is selected in Copy Glass, paper of $8^1/_2$ x $13^1/_2$ size is detected as Foolscap despite of the setting of $8^1/_2$ x 14/Foolscap Size Detection.

(b) Default setting

- $8^1/_2$ x 14

(c) Setting item

- "$8^1/_2$ x 14"
- Foolscap

(3) ADF Size Detection

(a) Use

- To set whether or not to give a priority to the detection of 8K/16K size when DF is used.

(b) Default setting

- K Size

(c) Setting item

- "K Size"
- B series

11.14.7 Install Date

(1) Use

- To register the date the main body was installed.
- Upon setup.

(2) Procedure

1. Call the Service Mode on the screen.
2. Select the key as follows.
   [System 1] -> [Install Date].
3. Touch Clear.
4. Enter the date (Year 4 digit -> Month 2 digit -> date 2 digit) from the 10-key pad.
5. Touch [Entry] to set the date of installation.

11.14.8 Initialization-Clear All Data

(1) Use

- To initialize the setting data.
- For details on items to be cleared, see "I.15. CONTENTS TO BE CLEARED BY RESET FUNCTION."

NOTE

- **When removing or installing the hard disk after registering the data below, be sure to clear the data.**
  Referring data: One-touch registration, user authentication/account track.

(2) Procedure

1. Call the Service Mode to the screen.
2. Select the key as follows.
   [System 1] -> [Initialization] -> [Clear All Data].
3. Press the Start key.
4. When [OK] is displayed, turn off the main power switch and turn it on again more than 10 seconds after.

NOTE
- **The trouble code "CD272: i-Option activated and additional memory and HDD not installed" is displayed after turned on the main power switch.**

5. Call the Service Mode to the screen and then select the key as follows.
   [System 2] -> [HDD] -> [Installed].
6. Exit the Service Mode and then turn off the main power switch and turn it on again more than 10 seconds after.

11.14.9 Initialization-Clear Individual Data

- Clear Individual Data enables you to select and clear multiple items at a time.

(1) Copy Program Data

(a) Use

- To clear data registered as copy program.
- Use this feature to clear all copy program data at a time.

(b) Procedure

1. Call the Service Mode on the screen.
2. Select the key as follows.
   [System 1] -> [Initialization] -> [Copy Program Data].
3. Press the Start key.
4. When [OK] is displayed, turn off the main power switch and turn it on again more than 10 seconds after.

(2) Address Registration Data

(a) Use

- To clear address registration data.
- Use this feature to initialize address registration data.
- The following are address registration data:
  Group address data, Program key data, One-touch destination data, Mail body data, Subject data, Prefix/suffix data

(b) Procedure

1. Call the Service Mode on the screen.
2. Select the key as follows.
   [System 1] -> [Initialization] -> [Address Registration Data].
3. Press the Start key.
4. When [OK] is displayed, turn off the main power switch and turn it on again more than 10 seconds after.

(3) Fax Setting Data

(a) Use

- To clear fax-related settings and parameters. However, address-related data is not cleared.
- Use this feature to clear fax-related settings and parameters at a time.

(b) Procedure

1. Call the Service Mode on the screen.
2. Select the key as follows.
   [System 1] -> [Initialization] -> [Fax Setting Data].
3. Press the Start key.
4. When [OK] is displayed, turn off the main power switch and turn it on again more than 10 seconds after.

(4) All History Data

(a) Use

- To clear history data.
- The following are history data:
  Job history, Journal history, Receive reject history, Destination history, Job secure counter (Internal data for history management)

(b) Procedure

1. Call the Service Mode on the screen.
2. Select the key as follows.
   [System 1] -> [Initialization] -> [All History Data].
3. Press the Start key.
4. When [OK] is displayed, turn off the main power switch and turn it on again more than 10 seconds after.

(5) Network Setting Data

(a) Use

- To clear network-related settings.
- Use this feature to initialize and set network-related settings again when the machine does not work properly upon change of network-related settings.

(b) Procedure

1. Call the Service Mode on the screen.
2. Select the key as follows.
   [System 1] -> [Initialization] -> [Network Setting Data].
3. Press the Start key.
4. When [OK] is displayed, turn off the main power switch and turn it on again more than 10 seconds after.

(6) Server Cache Data

(a) Use

- To clear user information cached from the external authentication server.
- When [Administrator Settings] -> [User Authentication/Account Track] -> [General Settings] -> [User Authentication] -> [Forward] -> [Temporarily Save Authentication Info.] is set to "Enable," the corresponding user information is cached each time when authentication by the external server is successful.
  The information is used when MFP cannot be connected to the external server.

(b) Procedure

1. Call the Service Mode on the screen.
2. Select the key as follows.
   [System 1] -> [Initialization] -> [Server Cache Data].
3. Press the Start key.
4. When [OK] is displayed, turn off the main power switch and turn it on again more than 10 seconds after.

11.14.10 Initialization-System Error Clear

(1) Use

- To reset the trouble data.
- Use to clear the [Jam], [Trouble], [Error] displays, and other improper displays.
- For details on items to be cleared, see "I.15. CONTENTS TO BE CLEARED BY RESET FUNCTION."

(2) Procedure

1. Call the Service Mode to the screen.
2. Select the key as follows.
   [System 1] -> [Initialization] -> [System Error Clear].
3. Press the Start key.
4. When [OK] is displayed, turn off the main power switch and turn it on again more than 10 seconds after.

11.14.11 Problem Unit Isolation Set.

(1) Use

- Individual units and options have a set or unset setting for the problem unit isolation set. function.
- When a problem occurs, this function enables the continuous use of the units that are not affected by separately controlling them and isolating other units that have a problem.
- The machine isolates only units that have a "set" setting.
  NOTE
  - **The malfunction detection mechanism is not applied to units and options that are being isolated.**

- This function can be selected for the following units and options.
  Tray 1, Tray 2, Tray 3, Tray 4, LCT, manual, Half-Fold/Tri-Fold Center Stapling, Punch, Staple, Scanner, ADF, Expansion Function (HDD)
- Though Problem Unit Isolation Set. is not selected, if the specified malfunctions occur on the above listed units or options, an alert screen appears and asks users whether to isolate the units or options where malfunction occurs.
  See the "K.3.4 List of the trouble code" section for the corresponding trouble codes.

(2) Default setting

- Unset

(3) Setting item

- Set
- "Unset"

NOTE

- **After changing the setting, touch [Apply] and turn the main power switch OFF and ON to make the new setting effective.**

11.14.12 Post card transfer table

(1) Use

- This setting allows you to select the transfer table to be used for thick3 postcards.
- For the use of thick 3 postcards, you can select the transfer table suitable for postcards.
- This setting is used to improve transfer performance to postcards.

Post.	The postcard 2nd image transfer table is used when printing on thick3 postcards.
Thick 3	The normal thick3 2nd image transfer table is used when printing on thick 3 postcards.

(2) Default setting

- Post.

(3) Setting item

- "Post."
- Thick 3

11.14.13 Warmup

(1) Use

- To change warm up completion time.
- Mode is changed to Mode 2 in case the paper gets curled significantly when printing is conducted immediately after warm up at Mode 1.
- Mode is changed to Mode 3 or 4 in case the paper gets curled immediately after normal warm up or the curled paper causes paper jam, paper exit failure, punch/staple/fold position failure or etc.

(2) Default setting

- Mode1

(3) Setting item

- "Mode1"
- Mode2
- Mode3
- Mode4

Mode1 (Default)	The warm-up period of time will be 30 seconds.
Mode2	The warm-up period of time will be 41 seconds.
Mode3	To prevent curling of the paper immediately after the warm-up, printing productivity is decreased by PPM control. The warm-up period of time will be 41 seconds.
Mode4	By having a longer warm-up time and warming up the fusing unit, curling of the paper immediately after the warm-up can be prevented. The warm-up period of time will be 100 seconds.

(4) Fusing operation mode

- Warm-up related control can be changed by using [Warm Up] setting and [Choice of high humidity circumstance] setting. When the main power switch is turned on, the mode is defined according to each choice setting.
- The following table shows the features of each operation mode.

Operation mode	Service Mode		Target user	Advantages	Disadvantages
	Warm up	Choice of high humidity circumstance			
1 (Default setting)	Mode1	OFF	want to print quickly	Makes warm-up time for shortest	Curling may occur in high humidity
2		ON	want to prevent curling	• Warm-up time is made shortest except when in high humidity • Decreases possibility curling occurs in high humidity	Warm-up time is long in high humidity (100 seconds or later)
3	Mode 2	OFF	want to print quickly	• Warm-up time is as specified value or later • High productivity even in high humidity	Curling may occur in high humidity
4		ON	want to prevent curling	• Warm-up time is as specified value or later except in high humidity • Decreases possibility curling occurs in high humidity	Warm-up time is long in high humidity (100 seconds or later)
5	Mode 3	OFF	• want to print quickly • want to prevent curling immediately after warm-up	• Warm-up time is as specified value or later • Decreases the curling in normal circumstance	• Productivity immediately after warm-up decreases • Curling may occur in high humidity
6		ON	• want to prevent curling immediately after warm-up • want to print quickly • want to prevent curling when humidity is high	• Warm-up time is as specified value or later • Decreases possibility curling occurs	• Productivity immediately after warm-up decreases • Warm-up time is long in high humidity (100 seconds or later)
7	Mode 4	OFF ON	want to prevent curling immediately after warm-up	Decreases possibility curling occurs	Warm-up time is long (100 seconds or later)

11.14.14 Machine State LED Setting

(1) Use

- To set how to display main body statuses on the machine state LED (state display lamp, paper empty lamp).

NOTE

- **Each of Type1 and Type2 has the following LED display forms.**

Machine State LED Setting			Type1	Type2
Warning Status	Attention	• Toner supply door open • Improper toner cartridge placement	Blinking	Blinking
	Near life		Blinking	Unlit
	Alert code		Unlit	Unlit
	Problem Unit Isolation		Blinking	Blinking
	Fatal error	• Trouble code • Jam • Door opened • Life stop	Lit	Lit
Paper Remainder (Tray 1/2 paper empty lamp)	100 % to near empty		Unlit	Unlit
	Near empty		Blinking	Unlit
	Empty		Lit	Lit
	• Being lifted up • Cassette open		Unlit	Unlit
Paper Remainder (Tray 3/4 paper empty lamp)	100 % to near empty		Unlit	Unlit
	Near empty		Blinking	Unlit
	Empty		Lit	Lit
	• Being lifted up • Cassette open		Unlit	Unlit

(2) Default setting

- Type 2

(3) Setting item

- Type 1
- “Type 2”

11.14.15 TP Level

(1) Use

- To adjust the selectivity of the touch panel.

(2) Default setting

- 0

(3) Setting range

- -2 to +2 (step: 1*)
- To increase sensitivity of the touch panel, increase the setting value.
- To decrease sensitivity of the touch panel, decrease the setting value.

NOTE

- **When the setting has been changed, turn off the main power switch and turn it on again more than 10 seconds after.**

11.15 System 2

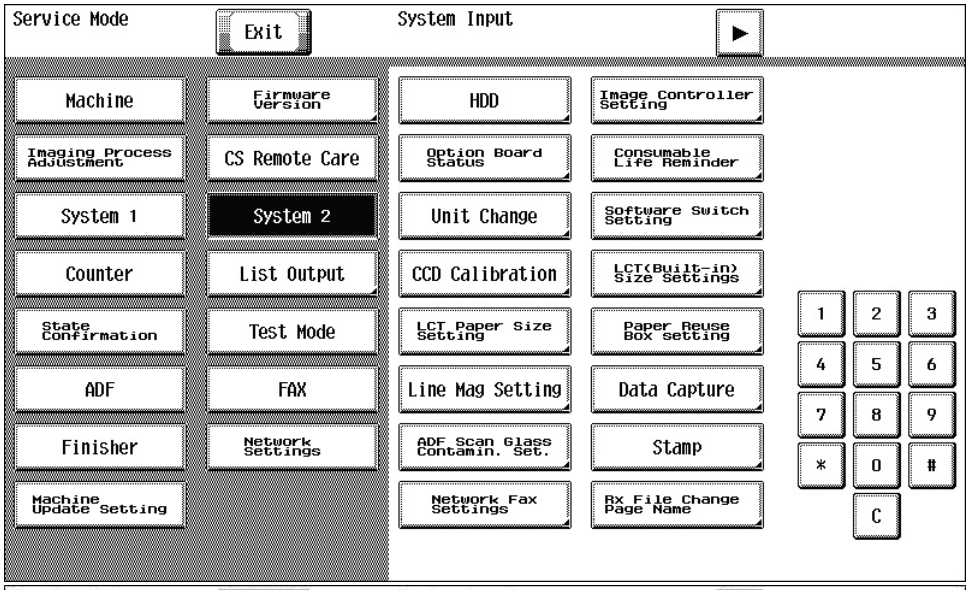

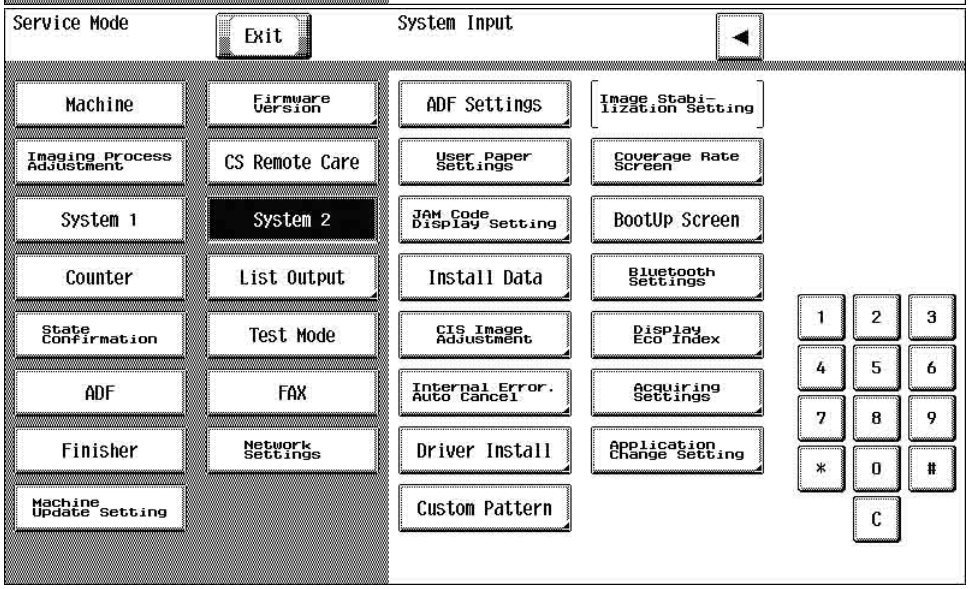

11.15.1 HDD

- Setting change is unnecessary. (Select [Installed] at any time.)

NOTE

- **For putting the following order [System 1] -> [initialization] into practice, the set becomes [Not Installed], causing an error. Required to set [Installed] again.**

11.15.2 Image Controller Setting

(1) Image Controller Setting

(a) Use

- To set the type of the controller.
- When setting up the controller.

(b) Procedure

- Select the controller to be used.

(c) Default setting

- Controller 0

(d) Setting item

- “Controller 0”: The standard controller is used.
- Controller 1: undefined.
- Controller 2: undefined.
- Controller 3: undefined.
- Others: undefined.

* [Peripheral Mode] appears when [Others] is selected.

NOTE
- **When the following setting is "ON", this setting should be set to "Controller 0".**
  [Administrator Settings] -> [Security Settings] -> [Enhanced Security Mode]
  When [Enhanced Security Mode] is set to "ON", this setting cannot be changed.
- **After changing setting, make sure to turn off the main power switch and turn it on again more than 10 seconds after.**

(2) Peripheral Mode

(a) Procedure

- Select the operating mode of the Scanner.

NOTE
- **After changing setting, make sure to turn off the main power switch and turn it on again more than 10 seconds after.**

(b) Setting item

- Mode 1: undefined.
- Mode 2: undefined.
- Mode 3: undefined.

11.15.3 Option Board Status

(1) Use

- To be used for setup of the optional fax kit (FK-511*1, FK-508*2) or the security kit (SC-508).

NOTE
- ***1: FK-511 is used for FAX line 1/line 2.**
- ***2: FK-508 is used for FAX line 3/line 4. The Fax Mount kit (MK-728) is required when line 3/4 is installed.**

(2) Default setting

- Unset

(3) Setting item

FAX (circuit 1)
- Set
- "Unset"

FAX (circuit 2)
- Set
- "Unset"

FAX (circuit 3)
- Set
- "Unset"

FAX (circuit 4)
- Set
- "Unset"

DSC1
- Set
- "Unset"

DSC2
- Set
- "Unset"

NOTE
- **When the setting has been changed, turn off the main power switch and turn it on again more than 10 seconds after.**

11.15.4 Consumable Life Reminder

(1) Use

- To select whether or not to give the display of PM parts lifetime

PM parts lifetime display	An entire screen warning is given when the service life of a specific unit has been reached, prompting the user to replace the part.

- Applicable units:
  Transfer belt unit, fusing unit, ozone filter, transfer roller unit, developing unit, drum unit
- Use to select not to give the display of PM parts lifetime.

Yes	When the service life has been reached, an entire screen warning appears on the control panel.
No	When the service life has been reached, a message appears in one line on the upper side of the screen.

(2) Default setting

- No

(3) Setting item

- Yes
- "No"

11.15.5 Unit Change

(1) Unit Change

(a) Use

- To select who is to replace a unit.
- When the unit life arrives, the warning display is intended for the specific person who is going to replace the unit.
  - When "User" is selected: Printing is inhibited.
  - When "Service" is selected: Life warning.
- Upon setup.

(b) Setting item

	Japan		US, Europe		Others1/2/3/4/5	
Toner Cartridge	“User”	Service	“User”	Service	“User”	Service
Drum Unit	“User”	Service	"User"	Service	“User”	Service
Waste Toner Box	“User”	Service	“User”	Service	“User”	Service
Hole-Punch Scrape Box	“User”	Service	“User”	Service	“User”	Service

(2) Warning Display - Toner Near Empty

(a) Use

- To set whether to display a toner near empty warning.
- To be used for setup.

(b) Default setting

- Yes

(c) Setting item

- “Yes”
- No

(3) Warning Display – Near Life Display Settings

(a) Use

- To set whether or not to display the near life warning of individual consumables.
- When [Do Not Display] is selected, a warning is not displayed at the time of near life detection. However, in CS Remote Care, near life warning is always sent to the Center regardless of this setting.
- Applicable consumables are as follows:
  Drum Unit, Developing Unit, Fusing Unit, Ozone Filter, Transfer Roller Unit, Image Transfer Belt Unit

(b) Default setting

- Display

(c) Setting item

- "Display"
- Do Not Display

11.15.6 Software Switch Setting

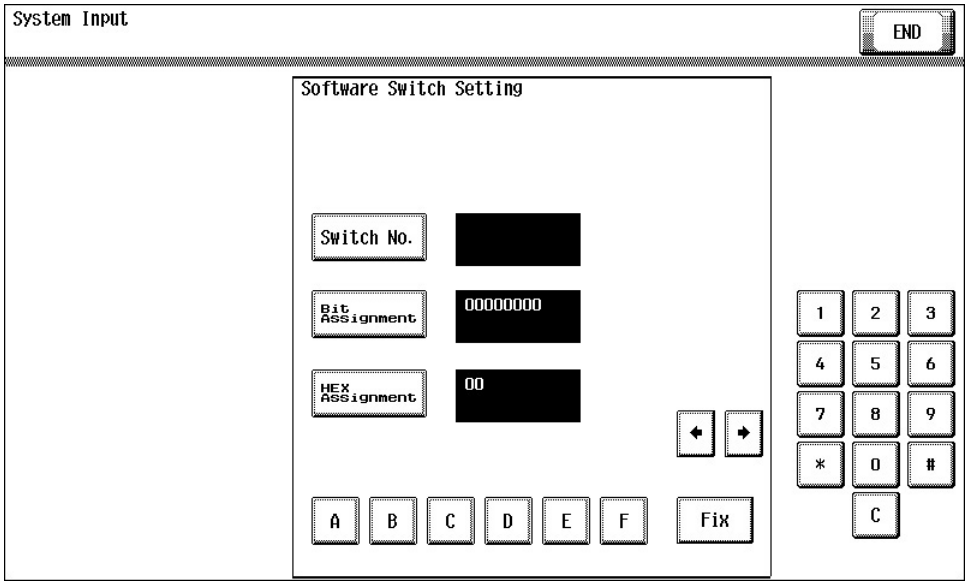

(1) Use

- To set the operating characteristic of each function from software switch depending on what types of printing are normally made.

(2) Procedure

1. Touch [Software Switch Setting].
2. Touch [Switch No.] and enter the intended switch number with the 10-key pad.
3. Touch [Bit Assignment].
4. Use [<-] or [->] to select a bit. To set the bit, enter 0 or 1 with the 10-key pad.
5. To set the bit in hex, touch [HEX Assignment] and use the 10-key pad and [A] to [F] keys to enter numbers and characters.
6. Touch [Fix].

(3) Details of the software switch settings

NOTE

- **For switches not mentioned in the list below, use them in the default value (Bit Assignment: 00000000 / HEX Assignment: 00) unless indicated otherwise.**

Switch No.	Function	Setting value			Default value (Bit/ HEX)	Reference
		Bit Assignment	HEX Assignment	Details		
012	Addition of the authentication device	00000000	00	Standard	00000000 / 00	I.13.3.4 Management Function Choice - Authentication Device 2
		00000010	02	[Card3] choice is added in Service Mode.		
033	Renders some functions, which were available when both administrator authentication and key counter were provided with when using the vendor, available only with administer authentication.	00000000	00	Available with the combination of administer authentication and key counter.	00000000 / 00	• I.7.7 System Settings-Expert Adjustment • I.7.8 System Settings-List/ Counter • I.7.8.1.(1) Job Settings List
		00000001	01	Available only with administrator authentication.		
051	Settings for the life warning/replace display of the units	00000000	00	Normal display	00000000 / 00	• O.4.3.9 Drum unit life detection • O.5.3.9 Developing unit life detection • O.7.3.9 Transfer belt life detection • O.14.3.10 Fusing unit life detection • I.11.16.2.(3) New Release
		00010000	10	Does not show the life warning/ replace display of the drum unit.		
		00100000	20	Does not show the life warning/ replace display of the developing unit.		
		01000000	40	Does not show the life warning/ replace display of the transfer belt unit.		
		10000000	80	Does not show the life warning/ replace display of the fusing unit.		
059	Display setting of [Engine FW Dip SW] on the Enhanced Security menu.	00000000	00	Not displayed.	00000000 / 00	I.12.3.9 Engine FW DipSW
		00000001	01	Displayed.		
063	Display setting of [Image Log Transfer Settings] on the control panel	00000000	00	Not displayed.	00000000 / 00	• I.13.3.8 Setting items that automatically change the setting values • I.7.97.1 Image Log Transfer Settings
		00000001	01	Displayed (Type 1)		
		00000010	02	Displayed (Type 2: Only applicable to fax communication)		
		00000011	03	Not used.		
069	When printing using the manual bypass tray in a custom size, allows for printing only with a printer driver settings.	00000000	00	After setting a paper in the manual bypass tray, touch [complete] to start printing.	00000000 / 00	-
		00000001	01	Start printing with the paper settings specified by the printer driver as the manual bypass tray paper settings without giving a warning.		
072	Import/export function of the address book through the USB memory	00000000	00	Import/export function is disabled.	00000000 / 00	I.7.103.1 Import/ Export
		00000100	04	Import/export function is enabled.		
124	Function to restrict the file type of TX Fax	00000000	00	Restrict the file type.	00000000 / 00	I.7.87.8.(3) Forward Dest.
		00000001	01	Do not restrict the file type.		
135	Setting for ID length of the HID Prox card	00000000	00	Reports that the 1st byte shows the ID length of the card, the 2nd byte and after shows the card ID.	00000000 / 00	-
		00000001	01	Reports the card ID with the ID length including the 1st byte.		

Switch No.	Function	Setting value			Default value (Bit/ HEX)	Reference
		Bit Assignment	HEX Assignment	Details		
143	Expansion setting of the touch panel sensitive area when the web browser function is used *1	00000000	00	26 dots : 26 dots from the perimeter of the touch panel is a non-sensitive area.	00000000 / 00	C.13.2 Web browser function
		00000001	01	16 dots : 16 dots from the perimeter of the touch panel is a non-sensitive area.		
		00000010	02	9 dots : 9 dots from the perimeter of the touch panel is a non-sensitive area.		
147	User Paper Settings 1 and 2 offer a choice of additional "thin paper" and "recycled paper".	00000000	00	• User Paper Settings 1: Plain paper • User Paper Settings 2: Plain paper	00000000 / 00	• I.7.7.28 User Paper Settings • I.11.15.19 User Paper Settings
		00000100	04	• User Paper Settings 1: Thin paper • User Paper Settings 2: Plain paper/recycled paper		
152	The E-mail body print settings of E-Mail RX Print	00000000	00	Disables the E-mail body print settings	00000000 / 00	• This function supports the following languages. English, French, Italian, Germany, Spanish
		00000001	01	Allows the E-mail body print settings.		
155	Validation/invalidation of the debug setting of the log.	00000000	00	Debug setting is disabled.	00000000 / 00	• Debug Setting/I.14.2 Starting/ Exiting • Debug Setting/I.14.4.1 Basic mode
		00000001	01	Debug setting is enabled.		
156	Line width setting of monochrome printing in the 1,200 dpi mode	00000000	00	Standard mode : When printed in the 1,200 dpi mode, thin lines appear in the same width as they are in the 600 dpi mode.	00000000 / 00	-
		00000001	01	Thick line mode*2 : When printed in the 1,200 dpi mode, thin lines appear wider than they are in the 600 dpi mode.		
157	Change the upper limit of the time for switching to power save mode.	00000000	00	Do not change the upper limit.	00000000 / 00	• I.6.1.8 Power Supply/Power Save Settings • I.7.1 System Settings-Power Supply/Power Save Settings
		00000010	02	Change the upper limit to 240 min.		
192	Set whether to enable the Android and iOS function	00000000	00	Android and iOS function is disabled.	00000000 / 00	-
		00000001	01	Android and iOS function is enabled.		

- *1: The sensitive area of the control panel can be expanded by selecting “16 dots” or “9 dots” on the software switch No.143. Note that the control panel’s sensitive area expanded in this manner may not detect touches properly.
- *2: When selecting the “thick line mode” on the software switch No.156, ensure to run the Image Stabilizer manually. Without the Image Stabilizer in effect, the image will be printed with increased density.
  Setting procedure
  1. Touch [Fix] after changing the software switch setting, and touch [END]. The software switch setting screen will be closed and the Service Mode screen will reappear.
  2. Touch [Exit]. The Service Mode screen will be closed and the basic screen will reappear.
  3. Turn OFF the main power switch and turn it ON again more than 10 seconds after.
  4. Go back into the Service Mode, and execute the Imaging Process Adjustment / Stabilizer (Initialize+Image Stabilization).
  5. After the Stabilizer has finished running, touch [END], and the Service Mode screen will reappear.
  6. Touch [Exit]. The Service Mode screen will be closed and the basic screen will reappear.
  7. Turn OFF the main power switch and turn it ON again more than 10 seconds after.

(4) Software Switch Setting list

- The list of the setting values of Software Switch Setting can be print from [Service Mode] -> [List Output] -> [Machine Management List].

Machine Manage P 9
ment List 03/09/2012 09:30
Serial No.
TC: 0

DipSW Setting

No.	Bit.	Hex	No.	Bit.	Hex	No.	Bit.	Hex	No.	Bit.	Hex	No.	Bit.	Hex
000	00000000	00	064	00000000	00	128	00000000	00	192	00000000	00	256	00000000	00
001	00000000	00	065	00000000	00	129	00000000	00	193	00000000	00	257	00000000	00
002	00000000	00	066	00000000	00	130	00000000	00	194	00000000	00	258	00000000	00
003	00000000	00	067	00000000	00	131	00000000	00	195	00000000	00	259	00000000	00
004	00000000	00	068	00000000	00	132	00000000	00	196	00000000	00	260	00000000	00
005	00000000	00	069	00000000	00	133	00000000	00	197	00000000	00	261	00000000	00
006	00000000	00	070	00000000	00	134	00000000	00	198	00000000	00	262	00000000	00
007	00000000	00	071	00000000	00	135	00000000	00	199	00000000	00	263	00000000	00
008	00000000	00	072	00000000	00	136	00000000	00	200	00000000	00	264	00000000	00
009	00000000	00	073	00000000	00	137	00000000	00	201	00000000	00	265	00000000	00
010	00000010	02	074	00000000	00	138	00000000	00	202	00000000	00	266	00000000	00
011	00000000	00	075	00000000	00	139	00000000	00	203	00000000	00	267	00000000	00
012	00000000	00	076	00000000	00	140	00000000	00	204	00000000	00	268	00000000	00
013	00000000	00	077	00000000	00	141	00000000	00	205	00000000	00	269	00000000	00
014	00000000	00	078	00000000	00	142	00000000	00	206	00000000	00	270	00000000	00
015	00000000	00	079	00000000	00	143	00000000	00	207	00000000	00	271	00000000	00
016	00000000	00	080	00000000	00	144	00000000	00	208	00000000	00	272	00000000	00
017	00000000	00	081	00000000	00	145	00000000	00	209	00000000	00	273	00000000	00
018	00000000	00	082	00000000	00	146	00000000	00	210	00000000	00	274	00000000	00
019	00000000	00	083	00000000	00	147	00000000	00	211	00000000	00	275	00000000	00
020	00000000	00	084	00000000	00	148	00000000	00	212	00000000	00	276	00000000	00
021	00000000	00	085	00000000	00	149	00000000	00	213	00000000	00	277	00000000	00
022	00000000	00	086	00000000	00	150	00000000	00	214	00000000	00	278	00000000	00
023	00000000	00	087	00000000	00	151	00000000	00	215	00000000	00	279	00000000	00
024	00000000	00	088	00000000	00	152	00000000	00	216	00000000	00	280	00000000	00
025	00000000	00	089	00000000	00	153	00000000	00	217	00000000	00	281	00000000	00
026	00000000	00	090	00000000	00	154	00000000	00	218	00000000	00	282	00000000	00
027	00000000	00	091	00000000	00	155	00000001	01	219	00000000	00	283	00000000	00
028	00000000	00	092	00000000	00	156	00000000	00	220	00000000	00	284	00000000	00
029	00000000	00	093	00000000	00	157	00000000	00	221	00000000	00	285	00000000	00
030	00000000	00	094	00000000	00	158	00000000	00	222	00000000	00	286	00000000	00
031	00000000	00	095	00000000	00	159	00000000	00	223	00000000	00	287	00000000	00
032	00000000	00	096	00000000	00	160	00000000	00	224	00000000	00	288	00000000	00
033	00000000	00	097	00000000	00	161	00000000	00	225	00000000	00	289	00000000	00
034	00000000	00	098	00000000	00	162	00000000	00	226	00000000	00	290	00000000	00
035	00000000	00	099	00000000	00	163	00000000	00	227	00000000	00	291	00000000	00
036	00000000	00	100	00000000	00	164	00000000	00	228	00000000	00	292	00000000	00
037	00000000	00	101	00000000	00	165	00000000	00	229	00000000	00	293	00000000	00
038	00000000	00	102	00000000	00	166	00000000	00	230	00000000	00	294	00000000	00
039	00000000	00	103	00000000	00	167	00000000	00	231	00000000	00	295	00000000	00
040	00000001	01	104	00000000	00	168	00000000	00	232	00000000	00	296	00000000	00
041	00000000	00	105	00000000	00	169	00000000	00	233	00000000	00	297	00000000	00
042	00000000	00	106	00000000	00	170	00000000	00	234	00000000	00	298	00000000	00
043	00000011	03	107	00000000	00	171	00000000	00	235	00000000	00	299	00000000	00
044	00000000	00	108	00000000	00	172	00000000	00	236	00000000	00			
045	00000000	00	109	00000000	00	173	00000000	00	237	00000000	00			
046	00000000	00	110	00000000	00	174	00000000	00	238	00000000	00			
047	00000000	00	111	00000000	00	175	00000000	00	239	00000000	00			
048	00000000	00	112	00000000	00	176	00000000	00	240	00000000	00			
049	00000000	00	113	00000000	00	177	00000000	00	241	00000000	00			
050	00000000	00	114	00000000	00	178	00000000	00	242	00000000	00			
051	00000000	00	115	00000000	00	179	00000000	00	243	00000000	00			
052	00000000	00	116	00000000	00	180	00000000	00	244	00000000	00			
053	00000000	00	117	00000000	00	181	00000000	00	245	00000000	00			
054	00000000	00	118	00000000	00	182	00000000	00	246	00000000	00			
055	00000000	00	119	00000000	00	183	00000000	00	247	00000000	00			
056	00000000	00	120	00000000	00	184	00000000	00	248	00000000	00			
057	00000000	00	121	00000000	00	185	00000000	00	249	00000000	00			
058	00000000	00	122	00000000	00	186	00000000	00	250	00000000	00			
059	00000000	00	123	00000000	00	187	00000000	00	251	00000000	00			
060	00000000	00	124	00000000	00	188	00000000	00	252	00000000	00			
061	00000000	00	125	00000000	00	189	00000000	00	253	00000000	00			
062	00000000	00	126	00000000	00	190	00000000	00	254	00000000	00			
063	00000000	00	127	00000000	00	191	00000000	00	255	00000000	00			

11.15.7 CCD Calibration

(1) Use

- To set whether to use the calibration adjustment value set prior to the shipping.
- To display the current calibration adjustment value.
- When CCD unit (front side)/CIS (back side: only when DF-701 is mounted) has been replaced, set to “OFF.”
  After replacing the CCD unit or CIS, the default generic value needs to be set since the calibration value set for each unit changes to control the differences in reading performance on each scanner (CCD).
- The original calibration adjustment value can be disabled to address image failure and other problems caused by individual CCD performance difference.
- When DF-701 is mounted, this setting can be made separately for [Front Side] and [Back Side].

(2) Default setting

- ON

(3) Setting item

- “ON”
- OFF

NOTE

- **When the setting is changed, the function becomes available by turning the main power switch OFF and ON again.**

11.15.8 LCT (Built-in) Size Settings

(1) Use

- To set the paper size for the built-in LCT.
- To use when the optional paper feed cabinet PC-410 is mounted.

(2) Default setting

- The default setting depends on the setting made for the applicable marketing area.

(3) Setting item

- A4
- 8 $^{1}/_{2}$ x 11

11.15.9 LCT Paper Size Setting

- Not used.

11.15.10 Paper Reuse Box Setting

(1) Use

- This setting is to be configured when the optional Paper Reuse Box is used.
- Select the paper loading port (tray 1/tray 2) where a paper reuse box is installed.

NOTE

- ***: To be commercialized on a near day. Now therefore, the Paper Reuse Box Setting should not be used at the present moment.**

(2) Default setting

- Do Not Use

(3) Setting item

1. "Do Not Use"
2. Tray 1
3. Tray 2

11.15.11 Line Mag Setting

(1) Use

- To set whether to use the offset value which has been set prior to the shipping.
- To display the current magnification offset value.
- When CCD unit (front side)/CIS (back side: only when DF-701 is mounted) has been replaced, set to "OFF."
  After replacing the CCD unit or CIS, the default generic value needs to be set since the magnification offset value between the lines set for each unit changes to control the differences in reading performance on each scanner (CCD).
- The original offset value can be disabled to address image failure and other problems caused by individual CCD performance difference.
- When DF-701 is mounted, this setting can be made separately for [Front Side] and [Back Side].

(2) Default setting

- ON

(3) Setting item

- "ON"
- OFF

NOTE

- **When the setting is changed, the function becomes valid by turning the main power switch OFF and ON again.**

11.15.12 Data Capture

(1) Use

- When an error occurs, it acquires the print job data in order to analyze the cause of the error.
- When an error occurs, this will be used to analyze the cause of the error according to the print job data.

(2) Default setting

- OFF

(3) Setting item

- ON
- "OFF"

(4) Procedure

NOTE

- **The following conditions are necessary for this function.**
  When selecting [Security Setting] -> [Security Details] -> [Print Data Capture] in Administrator Settings, [Allow] must be set.
- **The hard disk must be mounted to the machine.**
- **When selecting [Administrator Settings] -> [Network Settings] -> [FTP Settings] -> [FTP Server Settings], [ON] must be set.**

- **This function also allows print job data stored in the HDD to be obtained from [Debug Settings] -> [Debug Log Output].**

1. Select [Service Mode] -> [System 2], and touch [Data Capture]. Select [ON].
   (While the Data Capture setting is [ON], the print job data from the PC will be stored in the hard disk.)
   NOTE
   - **Maximum 5 print job data can be stored, and the data will be overwritten beginning with the chronologically oldest one.**

2. Check the IP address of the machine.
3. Connect the PC (Windows) and the machine with Ethernet cable.
4. Start the DOS command prompt of the PC, and specify the IP address of the machine to start FTP.

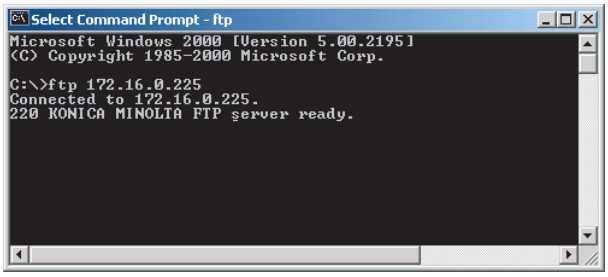

5. Input the user name and the password.
   - User name: capture
   - Password: sysadm

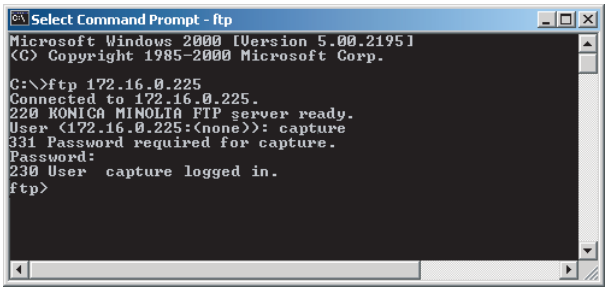

6. Using the “ls” command, display the list of the file available for capture.

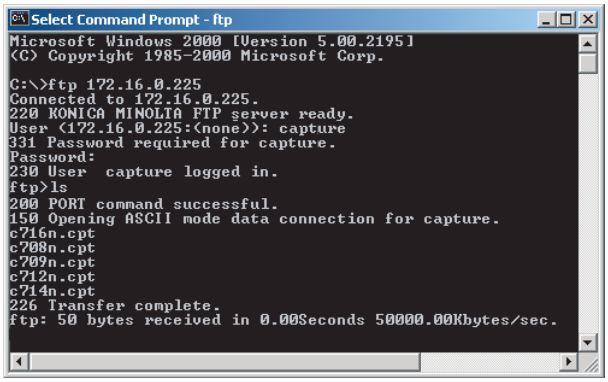

7. Using the “binary” command, set the File transfer mode to the binary transfer.

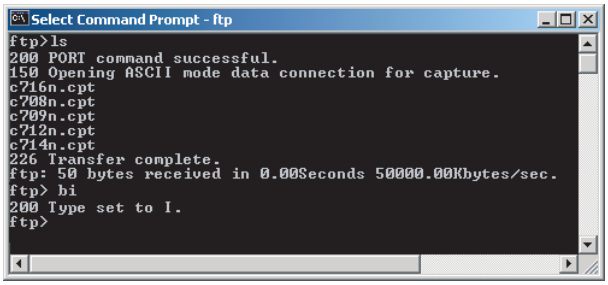

8. Using the “get” command, transfer the data for capture to PC.

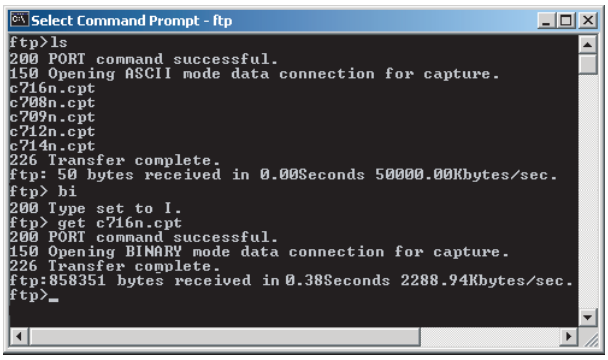

9. Finish the command prompt.

NOTE

- **After receiving capture data, select [Administrator Settings] -> [Security Settings] -> [Security Details] -> [Print Data Caputure], and select [Restrict] for print data capture in order to delete the job data stored in the hard disk. When HDD Format or Overwrite Temporary Data is performed, job data is deleted.**

11.15.13 ADF Scan Glass Contamin. Set.

- To make settings for contamination detection.
- Make the settings separately for the front side and the back side.

(1) ADF Scan Glass Contamin. Sensitivity

(a) Use

- To set the detection level for the pre-detection of stain on the DF original glass (or the CIS glass). In the back side pre-detection, stains of not only the CIS glass but also the back side glass cleaning roller are detected.
- Use when changing the setting for whether or not to detect the stain on the DF original glass when opening/closing DF as well as its detection level as the main power switch being ON, recovering from the sleep/low power mode, etc.

Not Set	Detection of stain on the glass will not be conducted.
Low	Stain on the glass will not be detected easily.
Normal	Normal level detection.
High	Stain on the glass will easily be detected.

NOTE

- **Be aware that selecting “Not Set” and performing the pre-detection with the following setting will display “NG.” [Service Mode] -> [Machine] -> [ADF Scan Glass Contamination]**
- **When “Not Set” is selected, the original glass cleaning operation after the job ends does not operate.**

(b) Default setting

- Normal

(c) Setting item

- Not Set
- Low
- “Normal”
- High

(2) ADF Scan Glass Contamin. Warn/Level

(a) Use

- To set how to display the warning when stain on the DF original glass (or the CIS glass) is detected.
- Use when changing the display of the warning which requests the cleaning of the stain on the glass detected by the pre-detection of the lines.

0	Warning will not be displayed.
1	Warning will be displayed by the maintenance mark. (Warning code: D-1/D-3)
2	Warning will be displayed on the message area on the basic screen.
3	Warning will be displayed on all screens.

NOTE

- **This setting is invalid when [ADF Scan Glass Contamin. Sensitivity] is set to “Not Set.”**

(b) Default setting

- 1

(c) Setting item

- 0

- "1"
- 2
- 3

(3) Feed Cleaning Settings

(a) Use

- To set the operation for detection and cleaning operation of stain on the DF original glass when feeding the original.
- Use when changing the operation for detection and cleaning operation of stain on the DF original glass when feeding the original.

0	The cleaning brush will stop moving when the original is fed, and will not perform cleaning the stain.
1	The cleaning brush will move between originals when feeding the original.

- This setting can be made separately for the front side and the back side.

(b) Default setting

- 1

(c) Setting item

- 0
- "1"

(4) Display Timing (only when DF-701 is mounted)

(a) Use

- To set the timing at which a warning is displayed when contamination is detected on the surface of the CIS glass in a pre-detection process.

Back Scan Time	Displays the warning only when duplex scanning mode is selected.
Warning Detection	Displays the warning whenever contamination is detected.

- This setting is enabled only when [Back Side] is selected.

(b) Default setting

- Back Side Scan

(c) Setting item

- Warning Detection
- "Back Side Scan"

11.15.14 Stamp

(1) Use

- To set the mounting status of the optional stamp unit SP-501.
- To use when setting up the stamp unit SP-501.

(2) Default setting

- Unset

(3) Setting item

- Set
- "Unset"

11.15.15 Network Fax Settings

(1) Use

- To set whether or not to use network fax function.
- To use network fax function (IP address fax, internet fax).
- Selection will be available when each network fax function is set to "ON" in the following settings.
  [Administrator Settings] -> [Network Settings] -> [Network Fax Settings] -> [Network Fax Function Settings]

(2) Default setting

- OFF

(3) Setting item

IP Address Fax
- ON
- "OFF"

Internet Fax
- ON
- "OFF"

11.15.16 RX File Change Page Name

(1) Use

- To set whether to change the document file name to forward TX or take out a file from the Memory RX Box.

(2) Default setting

- Do Not Change

(3) Setting item

- Change
- “Do Not Change”

11.15.17 ADF Settings

(1) Use

- To configure ADF installation settings.

(2) Default setting

- Unset

(3) Setting item

- “Unset”
- DF-624
- DF-701

11.15.18 Image Stabilization Setting

- Not used

11.15.19 User Paper Settings

(1) Use

- To set and register individual user paper that includes a different basic weight, fusing temperature, 2nd image transfer fine adjustment value.
- User Paper Settings is also available from [Administrator Settings] -> [System Settings] -> [Expert Adjustment] -> [User Paper Settings].
- To register a paper type that is suitable for individual customer’s intended use and use environment.
- The following shows user paper registration keys and corresponding paper types.

User Paper 1/2	Plain paper
User Paper 3	Thick1
User Paper 4	Thick1+
User Paper 5	Thick2
User Paper 6	Thick3

NOTE

- **[Service Mode] -> [System 2] -> [Software SW] -> [Switch No.: 147 HEX Assignment 04] allows the paper type for "User Paper 1" and "User Paper 2" to be changed. The change made of the paper type with the software SW is not, however, reflected in the paper type displayed on the screen and the screen shows [Plain paper], not [Thin paper] or [Plain paper/Recycled paper].**
- **This function can be used to reduce occurrence of blurred image, when the use of the user paper function does not eliminate blurred image on thin paper and recycled paper.**
- **Following list the paper type assigned to each user paper registration key after the change.**

User Paper 1	**Thin paper**
User Paper 2	**Plain paper/Recycled paper**
User Paper 3	**Thick 1**
User Paper 4	**Thick 1+**
User Paper 5	**Thick 2**
User Paper 6	**Thick 3**

(2) Procedure

1. Call the Service Mode to the screen.
2. Select the key as follows.
   [System 2] -> [▶] -> [User Paper Settings].
3. Select the desired key from [User Paper 1] to [User Paper 6] to register user paper.
4. Select [Basic Weight] and enter a value with the [+] / [-] key.
5. Select [600dpi] and enter a fusing temperature with the [+] / [-] key.
   The setting range is -20 °C to +10 °C. (1 step: 5 °C)
6. Select a target item of the [Secondary transfer adj.], and enter a 2nd image transfer fine adjustment value with the [+] / [-] key.
   The setting rage is -8 to +7. (1 step: 1 increment or decrement)
7. Set paper of A4S/A4 or $8^1/_2$ x 11S/81/2 x 11 on the manual tray.
8. Select [1Side] (only front side) or [Front side] (only back side) and press the Start key.
9. Check the image of the output test pattern.

If the image is not acceptable, adjust the settings and output the test pattern again.

(a) Test Pattern in User Paper Settings

- The printable test pattern for user paper settings is provided to ease determining the most appropriate 2nd image transfer output value when customizing user paper.
- This test pattern changes output voltage as shown below based on the standard voltage A (voltage determined by the 2nd image auto transfer voltage control) on a sheet of paper.

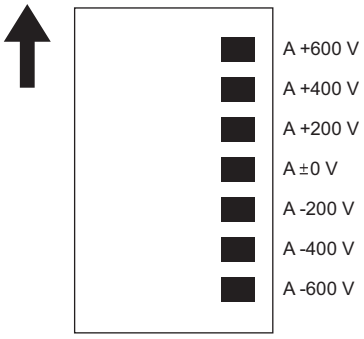

- A: Standard voltage

11.15.20 Coverage Rate Screen

(1) Use

- To set whether or not to display a coverage rate on the sales counter screen and sales counter list.

(2) Default setting

- Do Not Display

(3) Setting item

- Display
- “Do Not Display”

11.15.21 JAM Code Display Setting

(1) Use

- To set whether or not to add a jam code to a jam warning display on the control panel when a jam occurs.

(2) Default setting

- Do Not Display

(3) Setting item

- Display
- “Do Not Display”

11.15.22 BootUp Screen

(1) Use

- To customize the BootUp Screen displayed upon machine start-up.
- Use this feature when changing the KonicaMinolta logo displayed on the control panel upon start-up to a client company logo or others for client’s intended use of the machine.
- Register logo data in the machine’s flash ROM via a USB memory device.
  The following are the logo data specifications that should be met.

Image format	PNG format
File extension	*. png
File name	BootupScreen.png
Image size	800 x 480 dots
Color	256 colors (Palette that the machine specifies is used.)

NOTE

- **When making the logo data, use the exclusive image making tool.**
- **If a USB memory is not connected or a nonconforming USB memory is connected, “USB NG” is displayed and logo data cannot be registered.**
- **If the file name of logo data does not conform to the above specifications, "File NG" message is displayed and logo data cannot be registered.**

(2) Procedure

1. Save logo data that conforms to the above specifications in the root directory of a USB memory device.
   NOTE
   - **Be sure to save data in the root directory as the machine cannot detect data saved in other directories.**
2. Connect the USB memory device to the machine USB port.

3. Select the key as follows.
   [System 2] -> [▶] -> [BootUp Screen].
4. Touch [Set].
5. Check result "OK" is displayed and touch [END].
   NOTE
   - **If logo data is already registered, new logo data overwrites the existing logo data.**
   - **The color of logo data may look different between the machine control panel and some PC screens. After registering logo data, restart the machine and check the color of the logo data on the BootUp screen.**

* To delete registered data, touch [Delete] and check result "OK" is displayed.

11.15.23 Install Data

(1) Use

- To install voice data, movie data, OCR dictionary data, or PDF/A font into HDD.
- Selection of [OEM] makes customization of driver name, etc. possible by writing the OEM extended character string in the firmware package and downloading it.
- To use when the logical format of the hard disk is performed.
- To install each data into the machine HDD via USB memory.

(2) Procedure

NOTE

- **To use voice guide function, the optional upgrade kit UK-204 and i-Option LK-104 v3 must be activated, and the optional local interface kit EK-606 or EK-607 is mounted.**
- **To use searchable PDF function (OCR function), the optional upgrade kit UK-204 and i-Option LK-105 v3 must be activated.**
- **To create PDF/A-compliant PDF files where PDF/A font is used, optional upgrade kit UK-204 and i-Option LK-102 v3 must be enabled.**
- **To use high functional image processing function, the optional upgrade kit UK-204 and i-Option LK-110 must be activated. Besides, the OCR dictionary data must be installed.**

1. Save data (*.tar) into the root directory of a USB memory device.
2. To install the voice guidance, check if [Administrator Settings] -> [Voice Guidance Settings] -> [Voice Guidance] is set to "Yes".
3. Connect the USB memory device to the machine USB port.
4. Select the key as follows.
   [System 2] -> [▶] -> [Install Data].
5. Touch [Movie Data], [Voice Data], [OCR Dictionary], [PDF/A Font], or [OEM]. You can select the above five types of data at a time and install them.
6. Touch [Set].
7. Press the Start key to install the data.
8. Check result "OK" is displayed and touch [END].
   NOTE
   - **If data is already installed, it is necessary to delete old data before installing new one.**

* To delete registered data, select the data to be deleted, and touch [Delete] -> [Fix]. Check result "OK" is displayed.

11.15.24 Bluetooth Settings

(1) Use

- To set whether to enable or disable the Bluetooth function.
- Use this setting upon set-up of the optional local interface kit EK-607.

(2) Default setting

- Invalid

(3) Setting item

- Effective
- "Invalid"

11.15.25 CIS Image Adjustment

(1) Use

- To compensate colors so that the brightness, saturation, and hue of the back side image data (CIS image scanning quality) become consistent with those of the front side image data.
  To use only when the optional automatic document feeder DF-701 is mounted.

Brightness	Increase in the positive (+) direction makes the data brighter (paler) and increase in the negative (-) direction makes the data darker (deeper).
Saturation	Increase in the positive (+) direction makes the data clearer and increase in the negative (-) direction makes the data more subdued.
Hue	Increase in the positive (+) direction processes and outputs the data in the way that corresponds to the clockwise rotation on the hue circle. Increase in the negative (-) direction processes and outputs the data in the way that corresponds to the counterclockwise rotation on the hue circle.

(2) Default setting

- 0

(3) Setting range

- -3 to +3 (step: 1)

(4) Procedure

1. Call the Service Mode to the screen.
2. Select the key as follows.
   [System 2] -> [▶] -> [CIS Image Adjustment].
3. Select [Brightness], [Saturation] or [Hue].
4. Use the [+] or [-] key to change the setting value.
5. Touch [END] and determine the adjustment value.

11.15.26 Display Eco Index

(1) Use

- To set whether or not to display [Power Consumption] and [CO2 Emission] in Menu -> [Counter] -> [Eco Info]. The amount of power consumption displayed on MFP is an estimated value calculated from the average amount of power consumption and the operating hours of MFP, so that is not an exact power consumption value. Therefore, explain this to users before selecting the option of displaying these items.
- To set an emission coefficient used to calculate the amount of CO2 emission.
  As the CO2 emission coefficient is different depending on the electric power provider with whom the user contracts and the user's MFP use environment, the coefficient needs to be set individually.

(2) Default setting

- Power Savings Display Level: OFF
- Output Coefficient Settings: 0.4166

(3) Procedure

1. Explain to users that [Power Consumption] and [CO2 Emission] displayed on MFP are estimated values, and obtain their consent.
2. Call the Service Mode to the screen.
3. Touch these keys in this order: [System 2] -> [▶] -> [Display Eco Index].
4. Select [ON] in [Power Savings Display Level].
5. Depending on the user's MFP use environment, configure [Output Coefficient Settings] using the 10-key pad.
6. Touch [END].

11.15.27 Internal Error. Auto Cancel

(1) Use

- To set whether or not to automatically reset trouble when a trouble code classified as rank B or C occurs.

(2) Default setting

- Rank B: No
- Rank C: Yes

(3) Behavior

- When this setting is set to "Yes," MFP operates as follows:

1. When specified trouble occurs, the trouble warning screen displays for about 10 seconds the message that the trouble is automatically reset. Then automatic trouble reset is performed.
2. If the trouble reset is successful, MFP can be used.
   If the trouble reset fails, retry is performed. (The number of retries is up to 2 times.)

11.15.28 Acquiring Settings

(1) Use

- To count frequency of use by each function and collect machine configuration information.
- This setting allows us to understand the trend in the market and the usage of MFP by collecting and counting frequency of use by each function.
- The collected information can be obtained only via CSRC and cannot be displayed on the control panel or printed.
- To send the collected information, [Administrator Settings] -> [System Settings] -> [List/Counter] -> [Transmission Meter Count and Device Information] must be set to “Allow.”

(2) Default setting

- ON

(3) Setting item

- “ON”
- OFF

11.15.29 Driver Install

(1) Use

- To install/uninstall the loadable device driver.
- Used when the authentication device that needs the loadable device driver (include AU-102 and AU-201) is attached.

(2) Procedure (Install)

1. Prepare a USB memory where only the loadable device driver is stored in the ROOT directory. (Only one loadable device driver must be stored in the USB memory, and please do not save any other data in the USB memory.)
2. Connect the USB memory to the USB port of the MFP.
3. Call the Service Mode to the screen.
4. Touch [System 2] -> [Driver Install] -> [Install].
5. Touch [Loadable Driver] and touch [Start] to install the data.
6. Check that data is normally installed from the message that appears on the control panel.
7. Turn OFF the main power switch.
8. Remove the USB memory.

(3) Procedure (Uninstall)

1. Call the Service Mode to the screen.
2. Touch [System 2] -> [Driver Install] -> [Uninstall].
3. Select a driver to be uninstalled.
4. Touch [Start] to uninstall the data.
5. Check that data is normally uninstalled from the message that appears on the control panel.
6. Turn OFF/ON the main power switch.

11.15.30 Application Change Setting

(1) Use

- To set whether to allow a change of the settings for the specified application start.

(2) Default setting

- Permit

(3) Setting item

- “Permit”
- Prohibit
- If “Permit” is set, [Specified Application Start Setting] of the administrator settings can be configured.

11.15.31 Custom Pattern

- Will be available in the near future (The “Panel customization tool” will be released in the near future)

(1) Use

- To register or delete custom patterns.
- To customize the panel display by allowing MFP to read the setting file (CPD file) that defines whether or not to display the various setting keys that appear on the control panel.
- When making the setting file (CPD file), use the "Panel Customization Tool."

(2) Panel customization tool

(a) System requirement

PC	PC-AT compatible machine
CPU	Conforms to the specifications of the operating system
Memory (RAM)	Conforms to the specifications of the operating system
HDD	100 MB or more free space is required
Display	1280 x 800 pixels or more, 24bit full color
OS	• Windows XP Professional (SP3 or later) • Windows XP Professional x64 Edition (SP2 or later) • Windows 7 Professional (SP1 or later)* * 32-bit (x86) and 64-bit (x64) editions of Windows are supported.

(b) Operation procedures

When creating a new display setting file (CPD file):

1. Start up the Panel Customization Tool.
2. Set a name for your customization in [Name]. (1 to 24 characters consisting of one-byte alphanumerics and symbols. Comma cannot be used.)
3. Select a model in [Model].
4. Select a preset pattern or marketing area in [Preset]. (The number of functions displayed in the Function list below decreases in the order of Full > Standard > Basic.)
5. Select whether items should be displayed (ticked) or hidden (unticked) in [Function]. (Make this setting both in the Copy tab and the Scan/Fax tab.)
6. Save the setting file (CPD file) with one-byte alphanumerics and symbols in [Save as…].

When editing an existing setting file (CPD file):

1. Start up the Panel Customization Tool.
2. Select a model in [Model].
3. Select an existing setting file (CPD file) in [File] -> [Open].
4. Select whether items should be displayed (ticked) or hidden (unticked) in [Function]. (Make this setting both in the Copy tab and the Scan/Fax tab.)

5. Save the setting file (CPD file) with one-byte alphanumerics and symbols in [Save as…].

(3) Procedure

1. Copy the setting file (CPD file) to the root directory of a USB memory.
2. Connect the USB memory to the USB port of the MFP.
3. Call the Service Mode to the screen.
4. Touch [System 2] -> [Custom Pattern].
5. Select [Custom Pattern 1], [Custom Pattern 2] or [Custom Pattern 3].
6. Touch [Import] and press Start Key to import the data.
7. Select the registered custom pattern in [Administrator Settings] -> [System Settings] -> [Custom Display Settings] -> [Custom Function Pattern Selection].

To delete registered data, make sure that the custom pattern is not selected in [Administrator Settings] -> [System Settings] -> [Custom Display Settings] -> [Custom Function Pattern Selection], and touch [Delete] -> [Fix] and check that the result "OK" appears.

11.16 Counter

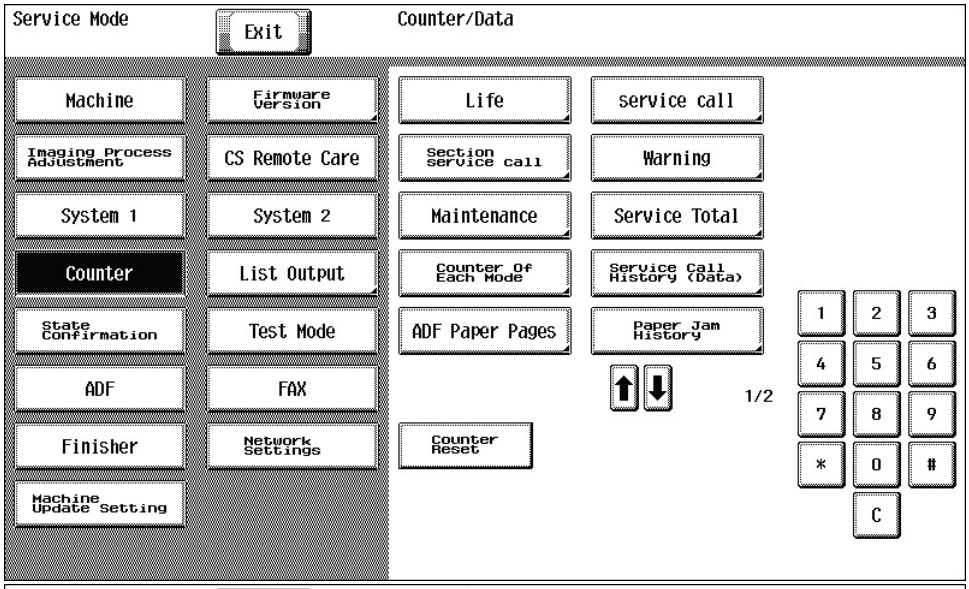

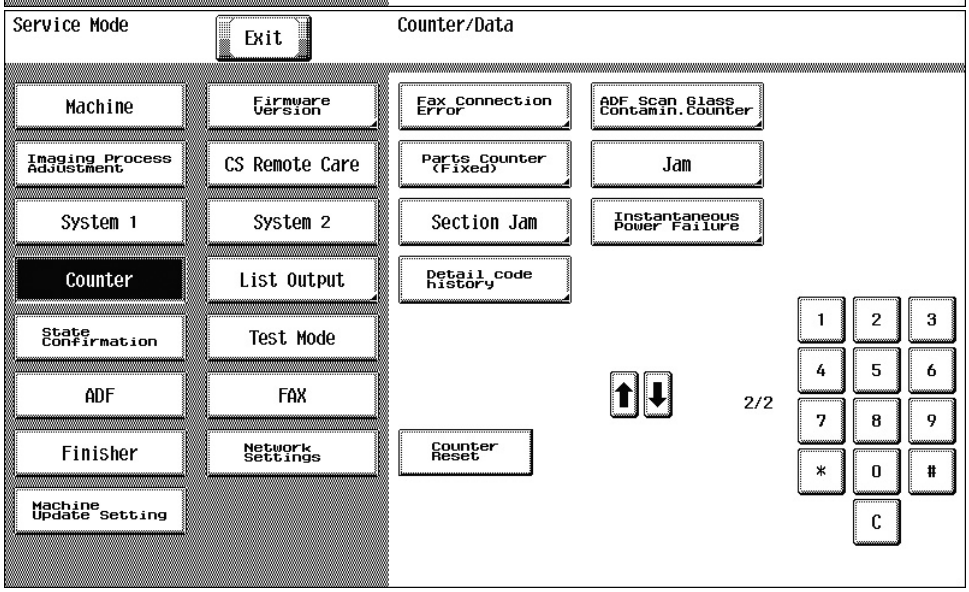

- The counter displays the counts of various counters to allow the technical representative to check or set as necessary.

11.16.1 Common procedure

1. Touch [Counter] to show the counter menu.
2. Select the specific counter to be displayed.
3. To clear the counts of two or more counters within a group or across different groups at once, touch [Counter Reset], select the specific counters to be cleared, and touch [END]. Two or more counters can be selected.
   (However, the [Service Call], [Service Total], [JAM], and [Detail code history] counters cannot be selected.)

11.16.2 Life

(1) Use

- To check the number of hours or times each of the different maintenance parts has been used.
- To clear the count of each counter.
- To perform New Release in fusing unit and transfer belt unit.
- To check how many times maintenance parts have been used.

- When each of the maintenance parts is replaced.

(2) Procedure

(a) Counter clear

- To clear the count of a counter, select the specific part and touch Clear.
- If a counter is cleared mistakenly, touch Interrupt, which will undo the clearing operation.
- It is not possible to clear the count of the counters for the fusing unit, transfer belt unit, drum unit, developing unit, and TCR new article detection.
- For the count method of each counter, see the table “Count method of each life counter.”

Count method of each life counter

Counter item	Counting method
Fusing Unit Page Count	Counts how many sheets have been ejected. The counter increases by 1 per every 216 mm in the sub scan direction and shows the total count. For paper length less than 216 mm in the sub scan direction, the counter uses 216 mm as the paper length.
Transfer Belt Unit Rotation Time	Counts how many hours the transfer belt unit has turned.
Transfer Belt Unit Page Count	Counts how many sheets have been ejected. The counter increases by 1 per every 216 mm in the sub scan direction and shows the total count. For paper length less than 216 mm in the sub scan direction, the counter uses 216 mm as the paper length.
Transfer Roller Unit	Counts how many hours the transfer roller unit has turned.
Ozone Filter	Counts how many hours the transfer belt unit has turned.
1st.	Number of sheets of paper fed from tray 1
2nd.	Number of sheets of paper fed from tray 2
3rd.	Number of sheets of paper fed from tray 3
4th.	Number of sheets of paper fed from tray 4
Manual Tray	Number of sheets of paper fed from the bypass
Drum Unit (C) Rotation Time	Not used.
Drum Unit (M) Rotation Time	
Drum Unit (Y) Rotation Time	
Drum Unit (K) Rotation Time	Counts how many hours Drum Unit has turned.
Developing Unit (C) Print Count	Not used.
Developing Unit (M) Print Count	
Developing Unit (Y) Print Count	
Developing Unit (K) Print Count	Counts how many sheets have been printed. The counter increases by 1 per every 216 mm in the sub scan direction and shows the total count. For paper length less than 216 mm in the sub scan direction, the counter uses 216 mm as the paper length.
LCT Parts	Not used.
LCT (Built-in) Parts	Number of sheets of paper fed from the built-in LCT(PC-410)
ADF Feed	Number of sheets of original fed through the take-up section of the DF
ADF Reverse	Number of sheets of original fed through the turnover unit of the DF (DF-624 only)
TCR new article detection (C)	Not used.
TCR new article detection (M)	
TCR new article detection (Y)	
TCR new article detection (K)	Count the number of the replacement of the developing unit.

(3) New Release

- After replacing a fusing unit or transfer belt unit, perform New Release to clear its life counter.
  1. Select the key as follows.
     [Counter] -> [Life] -> [New Release].
  2. Open the front door.
  3. Select a unit where New Release is made.
  4. Press the Start key and perform New Release.

(4) New Release Disable mode

- To enable a unit that is used temporarily for troubleshooting to be used again as a new unit in another machine, the New Release Disable mode is provided.
- Applicable units are the following units that have the new unit detection feature.
  Drum unit, Developing unit
- See the “I.12.3.9 Engine FW DipSW” for the method of enabling the New Release Disable mode.

11.16.3 Service Call

(1) Use

- To count and display how many times trouble has been detected on a trouble type basis.
- Use this feature to check how many times trouble has occurred.

NOTE

- **In the service call counter list, “Reboot” shows how many times abort code (C-FXXX) has occurred.**

- **Do not count the items that are not listed in the coverage list of this machine.**

11.16.4 Section Service Call

(1) Use

- To count and display how many times trouble has been detected during a certain period, i.e. an interval between service visits, on a trouble type basis.
- Use this feature to check how many times trouble has occurred in a certain period, i.e. an interval between service visits.
- By clearing the counter at the time of visit to your customer, i.e. service visit, you can check how many times trouble has occurred since the previous visit.
  To reset the counter, use [Counter Reset].

NOTE

- **In the zone service call list, "Reboot" shows how many times abort code (C-FXXX) has occurred.**
- **Do not count the items that are not listed in the coverage list of this machine.**

11.16.5 Warning

(1) Use

- To count and display how many times warning code has been detected on a warning code type basis.
- To check the number of warning conditions detected according to the warming type.

NOTE

- **Do not count the items that are not listed in the coverage list of this machine.**

(2) Procedure

- To clear the count of a counter, select the specific part and touch Clear.
- If a counter is cleared mistakenly, touch Interrupt which will undo the clearing operation.
- When a warning condition occurs, an oil mark appears at the upper right area of the basic screen.
- Touching the oil mark will display the warning code screen.

11.16.6 Maintenance

(1) Use

- To set a count value for maintenance of any given part.
- When any given part is replaced.

(2) Procedure

Maint.-Set

- Enter the maintenance counter value from the 10-key pad.

Maint.-Count

- The number of sheets that have been ejected is counted up. (1 sided: 1 count, 2 sided: 2 count)
- Touch Clear will clear the count.
- If the count is cleared mistakenly, touch Interrupt, which will undo the clearing operation.

11.16.7 Service Total

(1) Total

(a) Use

- To display the count value for the service total counter.
- Use to check the total No. of printed pages including the ones printed by the Service Mode.

(b) Procedure

- Service Total: No. of pages printed by user mode and Service Mode.
- Service Total (Duplex): No. of pages printed by user mode and Service Mode in duplex.

(2) Paper Size 1/Paper Size 2

(a) Use

- To display the count value for service total counter of each paper size.
- To check the total number of printed pages including the one at Service Mode according to each paper size.
- The count of Paper Size 1 and Paper Size 2 that contain the following paper sizes is provided respectively.

Paper Size 1	SRA3, A3, A4, A4S, A5, A6, B4, B5, B5S, B6, Post., 12 x 18, 11 x 17, 8 $^1/_2$ x 14, 8 $^1/_2$ x 11, 8 $^1/_2$ x 11S, 7 $^1/_4$ x 10 $^1/_2$, 5 $^1/_2$ x 8 $^1/_2$, 4 x 6, Foolscap
Paper Size 2	8K, 16K, Banner Paper, Others

11.16.8 Counter of Each Mode

(1) Use

- To display the printed pages in the following specified modes; copy, printer, scanner, and fax. It also displays the count value of using the specified mode.
- Use to check the printed pages in the following specified modes; copy, printer, scanner, and fax, as well as No. of times each mode was used, in order to know the using condition.

Copy/Print/Scanner counter	Displays individual counts in copy, printer, and scan mode.
Fax-related counter	Displays individual counts in fax mode.

Counter by finishing option	Displays individual counts on a finishing option basis.
Stabilization counter	Displays individual counts on a basis of the factors that cause image stabilization. The counter helps to understand what causes image stabilization and how to improve image stabilization control.
PJ counter	• Jobs that the machine has processed are divided according to the number of pages per job: 1P/J, 2P/J, ... 10P/J, or 11P/J and more. The total number of jobs in each group is counted and displayed separately based on whether job is processed. • The counter is used to understand how the machine has been used in the field.

11.16.9 Service Call History (Data)

(1) Use

- To display the trouble history in chronological order.
- Use to check the trouble history in chronological order.

11.16.10 ADF Paper Pages

(1) Use

- To display the No. of sheets and mixed originals fed to the automatic document feeder.

11.16.11 Paper Jam History

(1) Use

- To display the jam history in chronological order.
- Use to check the jam history in chronological order.

NOTE

- **[Code] displayed on the screen of JAM history indicates JAM code.**
  For details of JAM code, see "K.1.1 List of the JAM code."

11.16.12 Fax Connection Error

(1) Use

- To display the No. of fax transmission errors occurred.

11.16.13 ADF Scan Glass Contamin. Counter

(1) Use

- To display the average number of detected stain on the DF original glass (front side)/CIS glass (back side) at the pre-detection.
- Detection of CIS glass (back side) is available only when DF-701 is mounted.

Pre-detection small size (Front Side)	Small-sized detected stain divided by the number of times pre-detection is practiced (average number of detected lines) will be displayed.
Pre-detection size (Back Side)	Small-sized detected stain divided by the number of times pre-detection is practiced (average number of detected lines) will be displayed.
Cleaning brush rotation count (Front Side)	Total rotation count is displayed by counting 1 per one rotation of cleaning brush.
Cleaning brush rotation count (Back Side)	Total rotation count is displayed by counting 1 per one rotation of cleaning brush.

(2) Procedure

- To clear each counter value, select the items to be cleared, and touch Clear.
- If the count is cleared mistakenly, touch Interrupt, which will undo the clearing operation.

11.16.14 Parts Counter (Fixed)

- It will be displayed only when the optional finisher FS-533 or FS-534 is mounted.

(1) Use

- When the optional finisher is mounted, the parts counter screen displays the relevant parts and their counts. When the relevant parts are replaced, their counters need to be reset to update the service history.
- When the optional finisher is mounted, the relevant parts counter can be checked from this menu.
- Service history can be maintained from this menu.

NOTE

- **See the table below for the relevant parts and count method.**

(2) Procedure

1. Touch in the order of [Service Mode] -> [Counter] -> [↑] -> [Parts Counter (Fixed)].
2. Check the parts counter or display the relevant part of which counter will be reset.
3. Check the part count.
   To reset the count value, touch the key of the part where the counter is reset. Touch Clear.

(3) Fixed parts to be counted

No.	CSRC parameter	Parts name	Parts number	Limit value	Count condition	FS-534	FS-533
001	22	FNS 2-Staple Stapler	-	-	-	-	-
002	23	FNS Center Staple & Fold Stapler	A10D9293	200,000	1 count for each sheet ejection in both 1 staple and 2 staple mode.	●	-
003	3A	Stacker Accessory Plate Movement Monitor	-	-	-	-	-
004	26	FNS 1st Mid Fold Knife Motor	A3ERPP4S	250,000	1 count for each sheet ejection in half-fold, saddle stitch, and tri-fold mode	●	-
005	56	FNS 2nd Mid Fold Knife Motor	A3ERPP5R	250,000	1 count for each sheet ejection in tri-fold mode	●	-
006	34	FNS Output roller/A	-	-	-	-	-
007	57	FNS FD Alignment Roller	A2YUPPG0/4	1,000,000	1 count for each 1 stack	-	●
008	29	PI sheet paper feed clutch (Upper)	-	-	-	-	-
009	2A	PI sending Roller Pair/A (Upper)	-	-	-	-	-
010	2B	PI sending Roller Pair/B (Upper)	-	-	-	-	-
011	2C	PI Reversal Rubber Pair (Upper)	-	-	-	-	-
012	2D	PI Torque Limiter (Upper)	-	-	-	-	-
013	3C	PI Tray Up/Down Motor (Up)	-	-	-	-	-
014	2E	PI sheet paper feed clutch (Lower)	-	-	-	-	-
015	2F	PI sending Roller Pair/A (Lower)	-	-	-	-	-
016	30	PI sending Roller Pair/B (Lower)	-	-	-	-	-
017	31	PI Reversal Rubber Pair (Lower)	-	-	-	-	-
018	32	PI Torque Limiter (Lower)	-	-	-	-	-
019	3D	PI Tray Up/Down Motor (Down)	-	-	-	-	-
020	33	PI Regist	-	-	-	-	-
021	3B	Punch Motor	-	-	-	-	-
022	37	PK Counter	-	-	-	-	-
023	38	Punch scrap transportation motor pair	-	-	-	-	-
024	39	Punch clutch	-	-	-	-	-

11.16.15 Jam

(1) Use

- To count and display how many times jam has been detected on a jam location basis.

11.16.16 Section JAM

- To count and display how many times jam has been detected in a certain period, i.e. an interval between service visits, on a jam location basis.
- Use this feature to check how many times jam has occurred in a certain period, i.e. an interval between service visits.
- By clearing the jam counter at the time of visit to your customer site, i.e. service visit, you can check how many times jam has occurred since the previous visit.
  To reset the counter, use [Counter Reset].

11.16.17 Instantaneous Power Failure

(1) Use

- To display the latest 10 power shutdown events during operation of this machine in time axis.
- To reset the counter, use [Counter Reset].

11.16.18 Detail code history

(1) Use

- To display up to 100 detailed codes of the trouble code FA14 (thread soft error) by “Time series order”, “Monthly occurrence” or “Detailed Code Differentiator”.

11.17 List Output

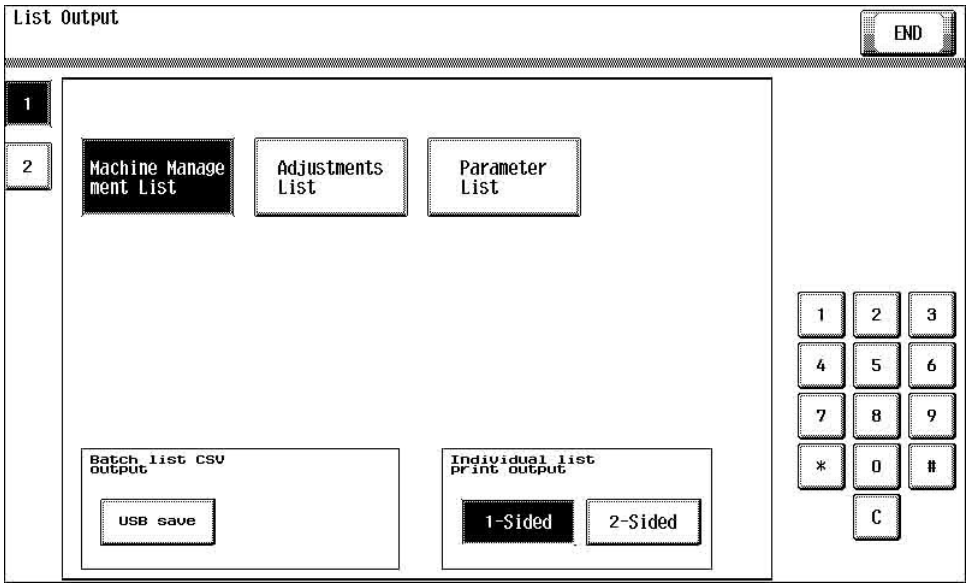

11.17.1 Batch list CSV output

(1) Use

- To save various lists data into a USB memory device all together with the CSV format.
- Compared to output to paper, outputting various lists data to the USB memory device can save time, paper, and toner. With the output data, analyzing the machine statistically becomes easier.
- Lists data to be output are as follows:

Target list	Data symbol
Machine Management List	S1
Adjustments List	S2
Parameter List	S3
Service Parameter	S4
Protocol Trace List	S5
Fax Setting List	S6
Management List	A1
Paper Size/Type Counter	A2
Configuration Page	U1
PCL Font List	U2
PS Font List	U3
Meter Count	C1

(2) Procedure

1. Call the Service Mode to the screen.
2. Touch [List Output].
3. Insert the USB memory device to the USB port (for user).
4. Touch [USB save] displayed in the Batch List CSV Output.
   Then, List data are transferred to the USB memory device.
5. Confirm that “OK” is displayed as the result of data saving.

<File names of lists data>

- Each list data has its file name in accordance with the following file name rule.
  [2-digit data symbol that corresponds to each list (see the above table)] + [_(underscore)] + [13-digit serial number] + [6-digit date (year, month, and day)] + [2-digit hour] + [2-digit minute].csv

11.17.2 Machine Management List

(1) Use

- To produce an output of a list of setting values, adjustment values, total counter values, and others.
- At the end of setup or when a malfunction occurs.
- To produce an output of a list of Software Switch Setting.

(2) Procedure

- Load the A4S/A4 or 8 1/2 x 11S/8 1/2 x 11 plain paper to a paper source.
- Press the Start key, which will let the machine produce the list.
- The time-of-day and date will also be printed.

NOTICE

- When performing list output, a detail code history list will be output.
- This [Detail code] is set to analyse the cause of the C-FA14 error or the C-E301 error.
- The refer, to send inquiries to KMI, also send the “detail code history list”.

11.17.3 Adjustments List

(1) Use

- To output the adjustment list for machine adjustment, process adjustment, etc. in Service Mode.
- At the end of setup or when a malfunction occurs.

(2) Procedure

- Load the A4S/A4 or 8 1/2 x 11S/8 1/2 x 11 plain paper to a paper source.
- Press the Start key, which will let the machine produce the list.
- The time-of-day and date will also be printed.

NOTE

- **For the color unused in this machine, “---” is displayed in the color relevant information.**

11.17.4 Parameter List

(1) Use

- Output a nonvolatile parameter list.

(2) Procedure

- Load the A4S/A4 or 8 1/2 x 11S/8 1/2 x 11 plain paper to a paper source.
- Press the Start key, which will let the machine produce the list.
- The time-of-day and date will also be printed.

11.17.5 Service Parameter

(1) Use

- Output a FAX Service Mode set value list.

(2) Procedure

- Load the A4S/A4 or 8 1/2 x 11S/8 1/2 x 11 plain paper to a paper source.
- Press the Start key, which will let the machine produce the list.
- The time-of-day and date will also be printed.

11.17.6 Protocol Trace

(1) Use

- Protocol Trace List (Last):
  The facsimile protocol of the communication which was executed previously is output.
- Protocol Trace List (Error):
  Output the facsimile procedure for the last error communication.

(2) Procedure

- Load the A4S/A4 or 8 1/2 x 11S/8 1/2 x 11 plain paper to a paper source.
- Press the Start key, which will let the machine produce the list.
- The time-of-day and date will also be printed.

11.17.7 Fax Setting List

(1) Use

- Output a FAX user set value list. (Items vary depending on models.)

(2) Procedure

- Load the A4S/A4 or 8 1/2 x 11S/8 1/2 x 11 plain paper to a paper source.
- Press the Start key, which will let the machine produce the list.
- The time-of-day and date will also be printed.

11.17.8 Fax Analysis List

(1) Use

- Following list is output in the Fax Analysis List.
  - Parameter List
  - Machine Management List
  - Protocol Trace List (Error)

- Fax Setting List
- Communication Management List
- Service Parameter List

(2) Procedure

- Load the A4S/A4 or 8 1/2 x 11S/8 1/2 x 11 plain paper to a paper source.
- Press the Start key, which will let the machine produce the list.
- The time-of-day and date will also be printed.

11.18 State Confirmation

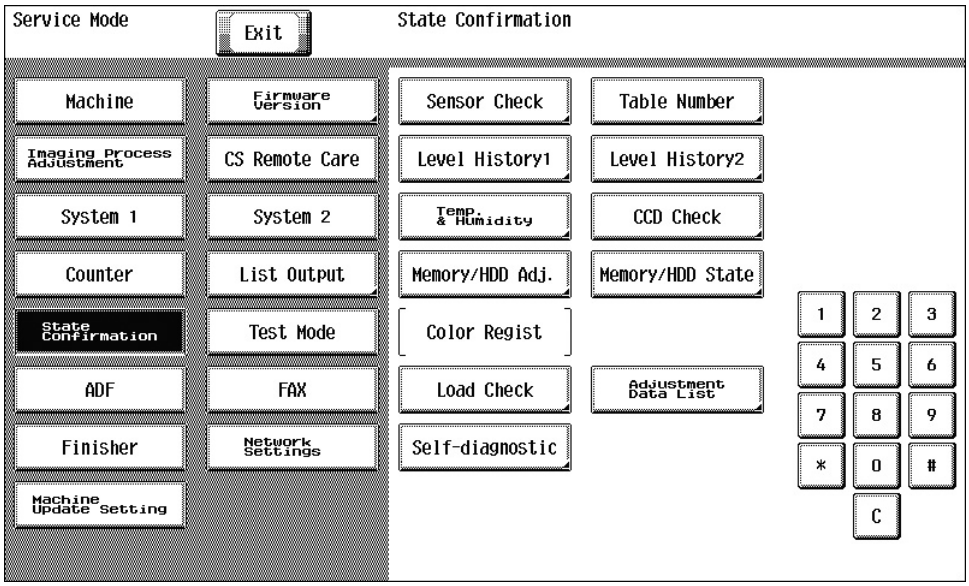

11.18.1 Sensor Check

(1) Use

- To display the states of the input ports of sensors and switches when the machine remains stationary.
- Used for troubleshooting when a malfunction or a misfeed occurs.

(2) Procedure

- The operation of each of the switches and sensors can be checked on a real-time basis.
- It can be checked as long as the 5-V power line remains intact even when a door is open.

(a) Electrical components check procedure through input data check

- When a paper misfeed occurs in the paper feed section of the machine, the tray 2 paper feed sensor is considered to be responsible for it.

1. Remove the sheet of paper misfeed.
2. From the sensor check list that follows, check the panel display of the tray 2 paper feed sensor. For the tray 2 paper feed sensor, you check the data of “Paper feed” of “Tray 2.”
3. Call the Service Mode to the screen.
4. Select [State Confirmation] -> [Sensor Check] and then select the screen that contains “Paper feed” under “Tray 2.” For “Paper feed” under “Tray 2,” select “1” on the left-hand side of the screen.
5. Check that the data for “Paper feed” under “Tray 2” is “0” (sensor blocked).
6. Move the actuator to unblock the tray 2 paper feed sensor.
7. Check that the data for “Paper feed” under “Tray 2” changes from “0” to “1” on the screen.
8. If the input data is “0,” change the sensor.

(3) Sensor check screens

- These are only typical screens which may be different from what are shown on each individual machine.

(a) Sensor monitor 1 (Main body, PC-110/210)

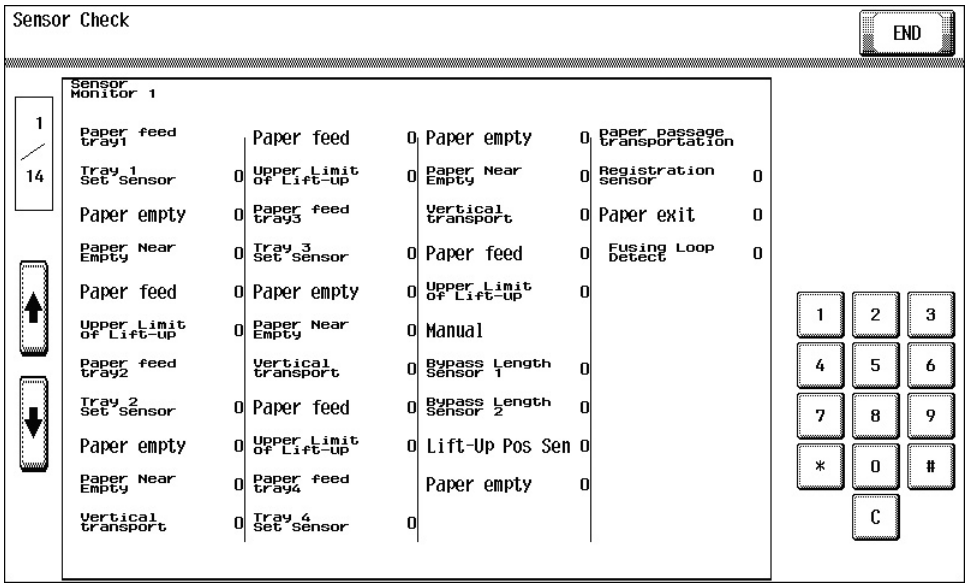

Symbol	Panel display	Part/signal name	Operation characteristics/panel display	
			1	0
	Paper feed tray 1			
-	Tray 1 Set Sensor	-	In position	Out of position
PS24	Paper empty	Tray 1 paper empty sensor	Paper not present	Paper present
PS11	Paper Near Empty	Tray 1 paper near empty sensor	Near empty	Other than near empty
PS23	Paper feed	Tray 1 paper feed sensor	Paper present	Paper not present
PS25	Upper Limit of Lift-up	Tray 1 upper limit sensor	At raised position	Not at raised position
	Paper feed tray 2			
-	Tray 2 Set Sensor	-	In position	Out of position
PS21	Paper empty	Tray 2 paper empty sensor	Paper not present	Paper present
PS12	Paper Near Empty	Tray 2 paper near empty sensor	Near empty	Other than near empty
PS19	Vertical transport	Tray 2 vertical transport sensor	Paper present	Paper not present
PS20	Paper feed	Tray 2 paper feed sensor	Paper present	Paper not present
PS22	Upper Limit of Lift-up	Tray 2 upper limit sensor	At raised position	Not at raised position
	Paper feed tray 3			
-	Tray 3 Set Sensor	-	In position	Out of position
PS114	Paper empty	Tray 3 paper empty sensor	Paper not present	Paper present
PS115	Paper Near Empty	Tray 3 paper near empty sensor	Near empty	Not near empty
PS113	Vertical transport	Tray 3 vertical transport sensor	Paper present	Paper not present
PS112	Paper feed	Tray 3 paper feed sensor	Paper present	Paper not present
PS116	Upper Limit of Lift-up	Tray 3 upper limit sensor	At raised position	Not at raised position
	Paper feed tray 4			
-	Tray 4 Set Sensor	-	In position	Out of position
PS124	Paper empty	Tray 4 paper empty sensor	Paper not present	Paper present
PS125	Paper Near Empty	Tray 4 paper near empty sensor	Near empty	Not near empty
PS123	Vertical transport	Tray 4 vertical transport sensor	Paper present	Paper not present
PS122	Paper feed	Tray 4 paper feed sensor	Paper present	Paper not present
PS126	Upper Limit of Lift-up	Tray 4 upper limit sensor	At raised position	Not at raised position
	Manual			
PS28	Bypass Length Sensor 1	Bypass FD paper size sensor/1	ON	OFF
PS29	Bypass Length Sensor 2	Bypass FD paper size sensor/2	ON	OFF
PS26	Lift-Up Pos Sen	Bypass lift-up position sensor	Paper feed position	Standby position
PS27	Paper empty	Bypass paper empty sensor	Paper not present	Paper present

Symbol	Panel display	Part/signal name	Operation characteristics/panel display	
			1	0
	Paper passage transportation			
PS1	Registration sensor	Registration sensor	Paper present	Paper not present
PS3	Paper exit	Paper exit sensor	Paper present	Paper not present
PS2	Fusing Loop Detect	Fusing loop sensor	Loop present	Loop not present

(b) Sensor monitor 2 (Main body, PC-410)

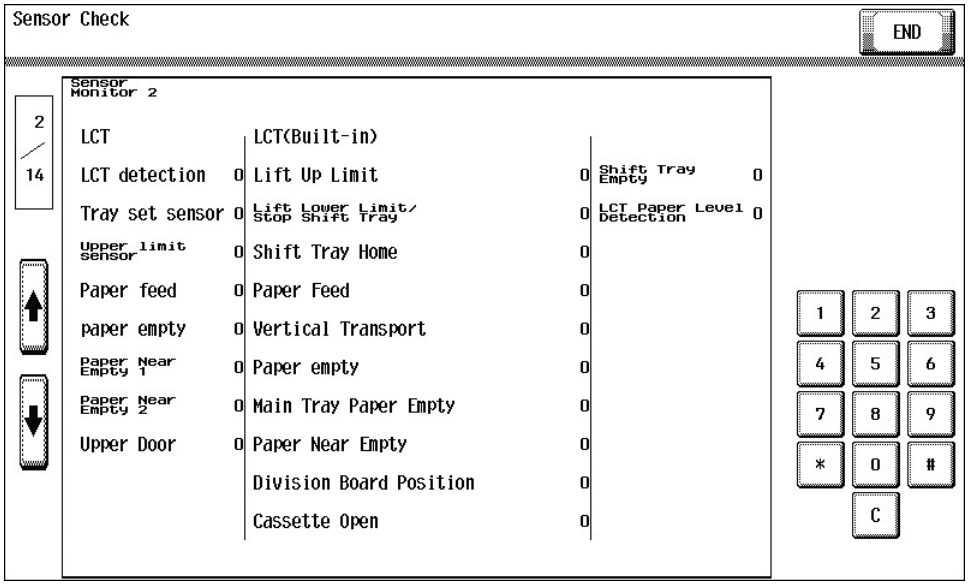

Symbol	Panel display	Part/signal name	Operation characteristics/panel display	
			1	1
	LCT			
-	LCT detection	Not used.		
-	Tray set sensor			
-	Upper Limit Sensor			
-	Paper feed			
-	Paper empty			
-	Paper Near Empty 1			
-	Paper Near Empty 2			
-	Upper Door			
	LCT (Built-in)			
PS136	Lift Up Limit	Main tray upper limit sensor	At raised position	Not at raised position
PS138	Lift Lower Limit/Stop Shift Tray	Shifter stop / lower limit position sensor	At lower position	Not at lower position
PS139	Shift Tray Home	Shifter home sensor	At home	Not at home
PS132	Paper Feed	Paper feed sensor	Paper present	Paper not present
PS133	Vertical Transport	Vertical transport sensor	Paper present	Paper not present
PS137	Paper empty	Main tray upper paper empty sensor	Empty	Paper present
PS134	Main Tray Paper Empty	Main tray paper empty sensor	Empty	Paper present
PS135	Paper Near Empty	Main tray paper near empty sensor	Near empty	Not near empty
PS142	Division Board Position	Division board sensor	Set	Unset
PS143	Cassette Open	Cassette set sensor	Open	Close
PS140	Shift Tray Empty	Sub tray paper empty sensor	Empty	Paper present
PS141	LCT Paper Level Detection	Sub tray paper remaining amount sensor	Paper present	Paper not present

(c) Sensor monitor 3 (Main body)

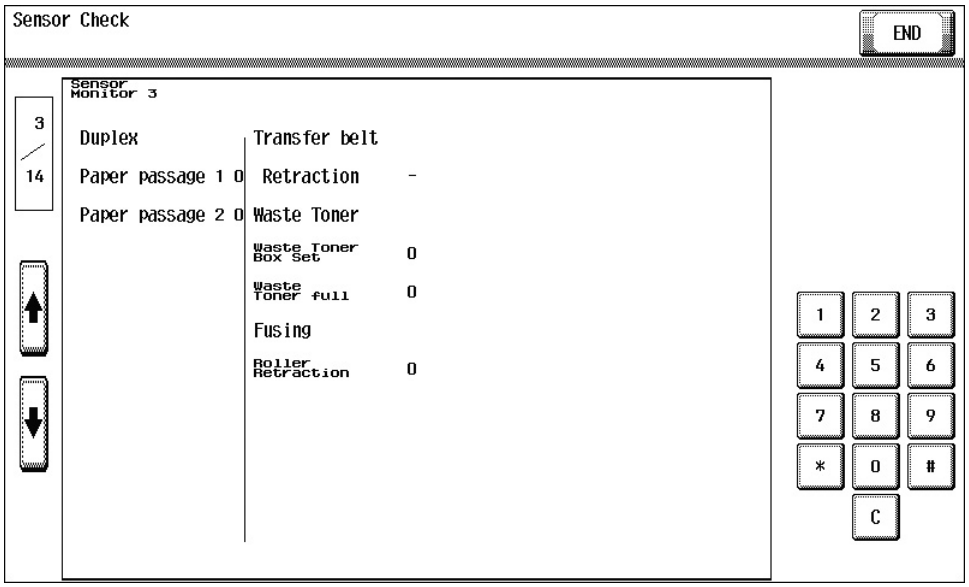

Symbol	Panel display	Part/signal name	Operation characteristics/panel display	
			1	0
	Duplex			
PS40	Paper passage 1	ADU paper passage sensor/1	Paper present	Paper not present
PS41	Paper passage 2	ADU paper passage sensor/2	Paper present	Paper not present
	Transfer belt			
-	Retraction	-	-	-
	Waste Toner			
PS100	Dispose Toner Box Set	Waste toner box set sensor	Set	Unset
PS101	Waste Toner full	Waste toner full sensor	Blocked	Unblocked
	Fusing			
PS38	Roller Retraction	Fusing pressure home sensor	Not released	Released

(d) Sensor monitor 4

- Not used.

(e) Sensor monitor 5

- Not used.

(f) Sensor monitor 6

- Not used.

(g) Sensor monitor 7 (horizontal transport unit)

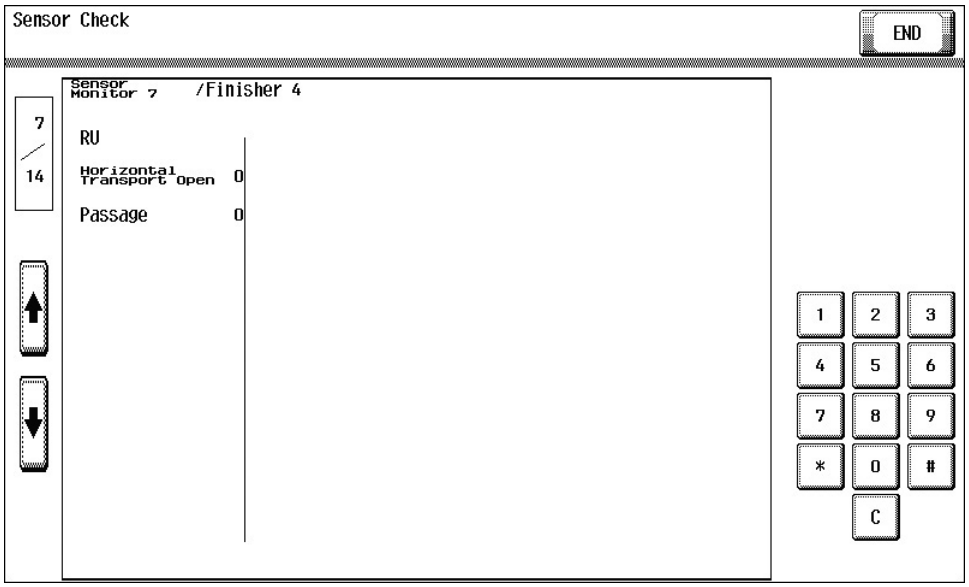

Symbol	Panel display	Part/signal name	Operation characteristics/panel display	
			1	0
	Finisher 4			
	RU			
PS3	Horizontal Transport Open	RU cover open/close detection sensor	Open	Close
PS2	Passage	RU entrance sensor	Paper not present	Paper present

(h) Sensor monitor 8

- Not used.

(i) Sensor monitor 9

- Not used.

(j) Sensor monitor 10 (FS-534)

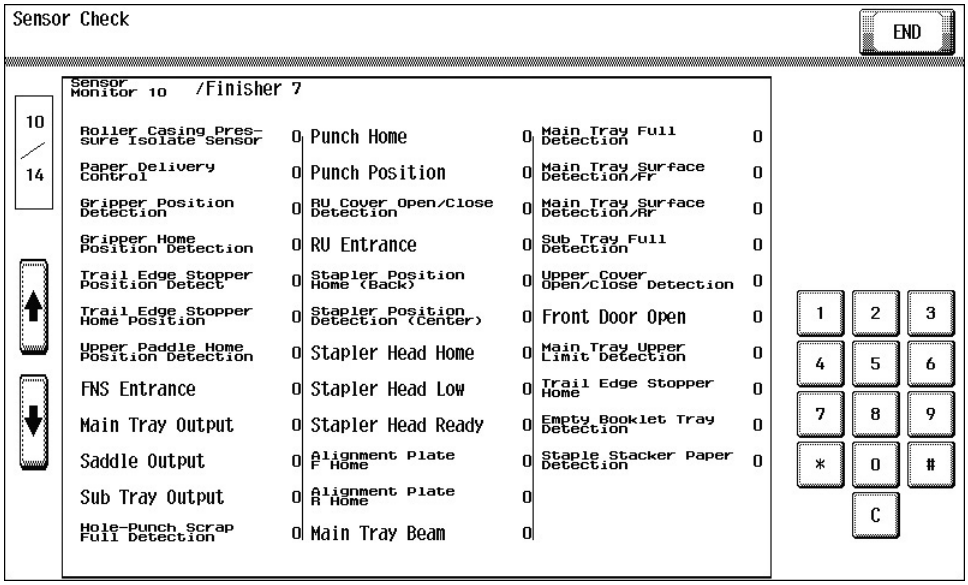

Symbol	Panel display	Part/signal name	Operation characteristics/panel display	
			1	0
	Finisher 7			
PS11	Roller Casing Pressure Isolate Sensor	Receiving roller retraction sensor	Not released	Released
-	Paper Delivery Control	-	At home	Not at home
PS19	Gripper Position Detection	Gripper position detection sensor	Not at home	At home
PS18	Gripper Home Position Detection	Gripper home position sensor	At home	Not at home
PS22	Trail Edge Stopper Position Detect	Pre-eject away sensor	Not at home	At home
PS20	Trail Edge Stopper Home Position	Trailing edge stopper home position detection sensor	At home	Not at home
PS14	Upper Paddle Home Position Detection	Upper paddle homeposition detection sensor	At home	Not at home
PS4	FNS Entrance	FNS entrance sensor	Paper present	Paper not present
PS6/PS7	Main Tray Output	Main tray upper sensor	Paper present	Paper not present
PS12	Saddle Output	Fold exit sensor	Paper present	Paper not present
PS8	Sub Tray Output	Sub tray exit sensor	Paper present	Paper not present
PS4/PS5	Hole-Punch Scrap Full Detection	Punch dust full sensor	Full	Other than full
PS1	Punch Home	Punch home sensor	At home	Not at home
PS2	Punch Position	Punch position sensor	At home	Not at home
PS3	RU Cover Open/Close Detection	RU cover open/close detection sensor	Open	Closed
PS2	RU Entrance	RU entrance sensor	Paper present	Paper not present
PS23	Stapler Position Home (Back)	Stapler home position sensor (Rear)	At home	Not at home

Symbol	Panel display	Part/signal name	Operation characteristics/panel display	
			1	0
PS24	Stapler Position Detection (Center)	Stapler position sensor (Center)	Detected	Not detected
PS9	Stapler Head Home	Center stapler /fold home sensor	At home	Not at home
-	Stapler Head Low	Staple empty detect sensor	Staple present	Staple not present
-	Stapler Head Ready	-	Staple available	Staple unavailable
PS12	Alignment Plate F Home	Alignment plate/F home sensor	At home	Not at home
PS13	Alignment Plate R Home	Alignment plate/R home sensor	At home	Not at home
-	Main Tray Beam	-	Blocked	Unblocked
PS29	Main Tray Full Detection	Main tray full detection sensor	Full	Other than full
PS27	Main Tray Surface Detection/Fr	Main tray upper position sensor/F	Upper position	Other than upper position
PS26	Main Tray Surface Detection/Rr	Main tray upper position sensor/R	Upper position	Other than upper position
PS9/PS10	Sub Tray Full Detection	Sub tray full detection sensor	Full	Other than full
PS32	Upper Cover Open/ Close Detection	Upper cover open/close detection sensor	Open	Closed
SW1	Front Door Open	Front door open detect switch	Open	Closed
SW2	Main Tray Upper Limit Detection	Main tray upper position detect switch	At upper limit position	Not at upper limit position
PS6	Trail Edge Stopper Home	Stopper Home sensor	At home	Not at home
PS13/PS14	Empty Booklet Tray Detection	Booklet tray empty detection sensor	Paper present	Paper not present
PS31	Staple Stacker Paper Detection	Staple stacker paper detection sensor	Paper present	Paper not present

(k) Sensor monitor 11 (FS-534, SD-511)

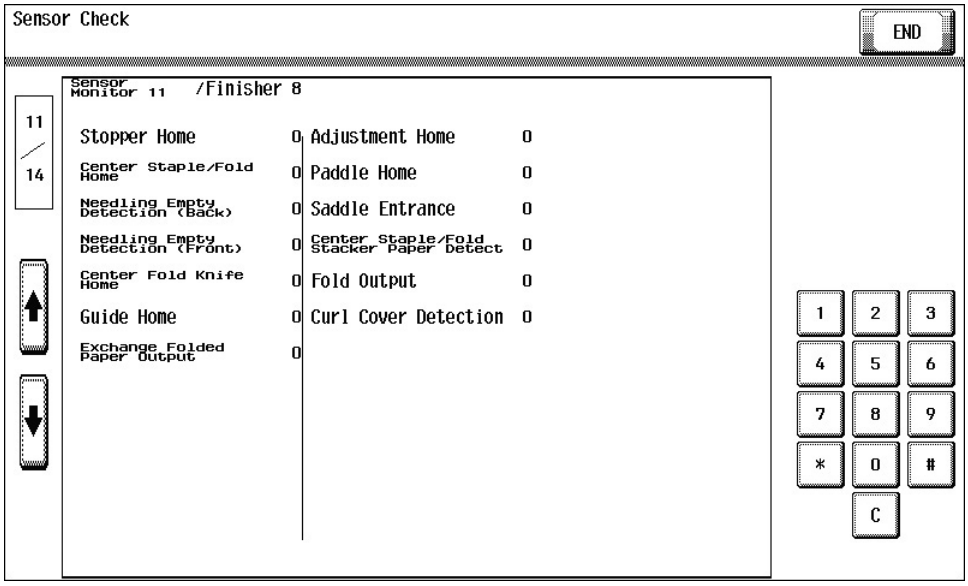

Symbol	Panel display	Part/signal name	Operation characteristics/panel display	
			1	0
	Finisher 8			
PS20	Stopper Home	Trailing edge stopper home position detection sensor	At home	Not at home
PS9	Center Staple/Fold Home	Center stapler /fold home sensor	At home	Not at home
PS15	Needling Empty Detection (Back)	Staple empty detection sensor (Rear)	Staple present	Staple not present
PS16	Needling Empty Detection (Front)	Staple empty detection sensor (Front)	Staple present	Staple not present
PS8	Center Fold Knife Home	Center fold knife home sensor	At home	Not at home
PS7	Guide Home	Guide home sensor	At home	Not at home

Symbol	Panel display	Part/signal name	Operation characteristics/panel display	
			1	0
PS30	Exchange Folded Paper Output	Exchange folded paper output sensor	At home	Not at home
PS4	Adjustment Home	Alignment home sensor	At home	Not at home
PS5	Paddle Home	Paddle home sensor	At home	Not at home
PS1	Saddle Entrance	SD entrance sensor	Paper present	Paper not present
PS3	Center Staple/Fold Stacker Paper Detect	Center staple/fold stacker paper detect sensor	Paper present	Paper not present
PS12	Fold Output	Fold exit sensor	Paper present	Paper not present
PS2	Curl Cover Detection	Curl cover detection sensor	Not at home	At home

(l) Sensor monitor 12 (FS-533)

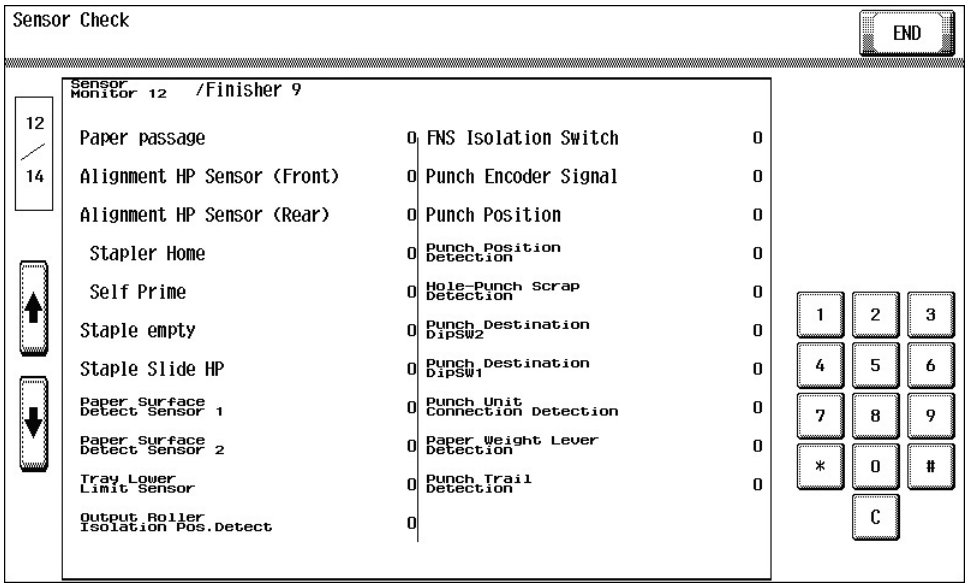

Symbol	Panel display	Part/signal name	Operation characteristics/panel display	
			1	0
	Finisher 9			
PS101	Paper Passage	Paper feed sensor	Paper present	Paper not present
PS108	Alignment HP Sensor (Front)	Alignment plate home sensor/F	At home	Not at home
PS109	Alignment HP Sensor (Rear)	Alignment plate home sensor/R	At home	Not at home
PS110	Stapler Home	Stapler home sensor	At home	Not at home
PS112	Self Prime	Self prime sensor	Staple present	Staple not present
PS113	Staple empty	Staple empty sensor	Staple not present	Staple present
PS111	Staple Slide HP	Stapler home sensor	At home	Not at home
PS102	Paper Surface Detect Sensor 1	Paper surface detect sensor/1	Paper present	Paper not present
PS104	Paper Surface Detect Sensor 2	Paper surface detect sensor/2	Blocked	Unblocked
PS107	Tray Lower Limit Sensor	Paper exit tray home sensor	At lower position	Not at lower position
PS105	Output Roller Isolation Pos. Detect	Pick up roller position sensor	At home	Not at home
SW1	FNS Isolation Switch	Finisher lock switch	Open	Closed
PS202	Punch Encoder Signal	Punch motor sensor	Blocked	Unblocked
PS204	Punch Position	Puncher home sensor	At home	Not at home
PS203	Punch Position Detection	Puncher drive cam sensor	At home	Not at home
PS205	Hole-Punch Scrap Detection	Punch dust full sensor	ON	OFF
-	Punch Destination DipSW2	-	ON	OFF
-	Punch Destination DipSW1	-	ON	OFF

Symbol	Panel display	Part/signal name	Operation characteristics/panel display	
			1	0
-	Punch Unit Connection Detection	-	Connected	Not connected
PS103	Paper Weight Lever Detection	Paper weight lever sensor	Blocked	Unblocked
PS201	Punch Trail Detection	Paper feed sensor	Paper present	Paper not present

(m) Sensor monitor 13

- Not used.

(n) Sensor monitor 14 (Scanner section of the MFP)

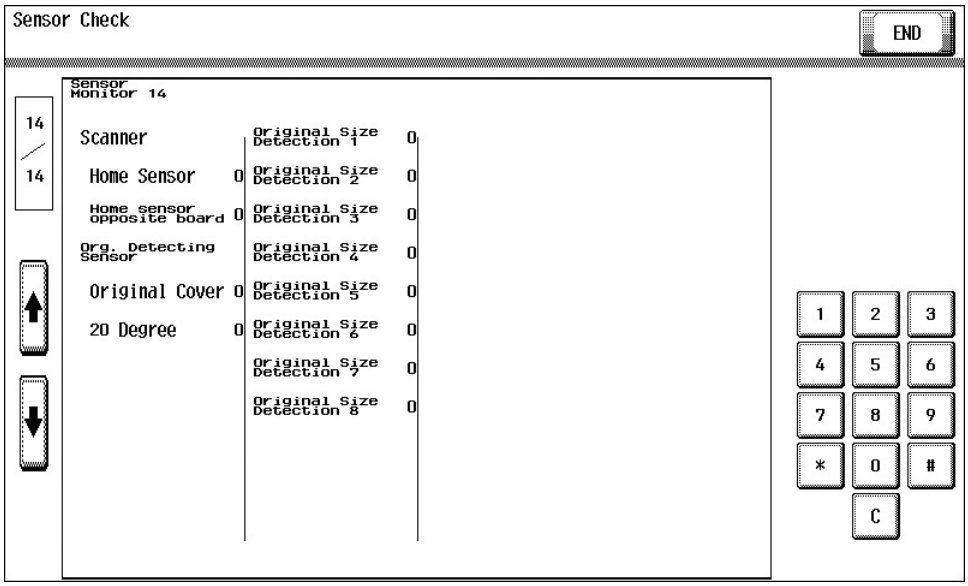

Symbol	Panel display	Part/signal name	Operation characteristics/panel display	
			1	0
	Scanner			
PS201	Home Sensor	Scanner home sensor	At home	Out of home
PS13/PS12	Home sensor opposite board	Document reading glass cleaning sensor	At home	Out of home
	Org. Detecting Sensor			
RS201	Original Cover	Original cover sensor	Lowered	Raised
PS202	20 Degree	Angle sensor	Less than 20 degree *1	20 degree or more *1
PS204	Original Size Detection 1	Original size sensor/1	• Original loaded • Not mounted	Original not loaded
PS205	Original Size Detection 2	Original size sensor/2	• Original loaded • Not mounted	Original not loaded
-	Original Size Detection 3	Not used	-	-
-	Original Size Detection 4	Not used	-	-
-	Original Size Detection 5	Not used	-	-
-	Original Size Detection 6	Not used	-	-
-	Original Size Detection 7	Not used	-	-
-	Original Size Detection 8	Not used	-	-

- *1: When DF-701/DF-624 is mounted, machine detected the angle at 14.5 degrees.

11.18.2 Table Number

(1) Use

- When IDC is detected, for plain paper, Thick 1/1+, Thick 2/3/4, and Black, the machine independently displays each Vg/Vdc output value that is calculated based on the density (toner amount stuck on the belt) of the test pattern created on the transfer belt.
- Used for troubleshooting of image problems.

- Reference values: Vdc: around 400 V, Vg: around 500 V

11.18.3 Level History 1

(1) Use

- To display TCR (T/C ratio), IDC/registration sensor output values, and fusing temperature.
- Used for troubleshooting of image problems.

(2) Procedure

TCR-K	Shows the T/C output reading taken last.
IDC2	Shows the latest IDC data.
Middle heat temperature	Not used.
Medium Heating Temperature	Displays the latest detected temperature of the heating roller thermistor/2.
Heat edge temperature	Displays the latest detected temperature of the heating roller thermistor/1.
Main Heating Temperature	Displays the latest detected temperature of the heating roller temperature sensor.

“Reading taken last” means

- Density of toner of the latest image.
- When a test pattern is produced by pressing the Start key while level history 1 is being displayed.

11.18.4 Level History 2

(1) Use

- IDC Sensor (Transfer belt bare surface level) as adjusted through the image stabilization sequence and ATVC value.
- Used for troubleshooting of image problems.

(2) Procedure

IDC Sensor Adjust 2	Shows the intensity adjustment value (0 to 255) of the IDC sensor. The normal value is 35 to 110, but the value increases depending on how long the machine has been used.
ATVC-K	Shows the first image transfer nearest output value (5 to 40 µA).
ATVC -2nd	Shows the second image transfer nearest output value (300 to 4,800 V).

11.18.5 Temp. & Humidity

(1) Use

- To display the temperature, humidity and paper temperature of a specific location (IDC sensor portion) inside the machine.
- Used as reference information when a malfunction occurs.

(2) Procedure

Temp-Inside	0 to 80 °C in 1 °C increments
Humidity	10 to 90 % in 1 % increments
Absolute Humidity	0 to 255 in 1 increments
Paper temperature	0 to 100 °C in 1 °C increments

11.18.6 CCD Check

(1) Use

- To display the D/A value of CCD clamp/gain for R, G, and B.
- To display the D/A value of CIS clamp/gain. (DF-701 only)
- Used for troubleshooting for the CCD sensor/CIS.

(2) Procedure

- Use the following guidelines on the correct range of values.

(a) CCD

- CLAMP: The maximum value and the minimum value of the output value should be within the range shown below.

Acceptable clamping rage	Minimum value	Maximum value
R	600	1500
G	600	1700
B	600	1600

- GAIN: The maximum value and the minimum value of the output value should be within the range shown below.

Acceptable gain range	Minimum value	Maximum value
R	20	238
G	10	222
B	70	247

(b) CIS (Only when the optional DF-701 is mounted)

- CLAMP: 0 (remain static)
- GAIN: 70 to 255 * Show data themselves

11.18.7 Memory/HDD Adj.

(1) Memory Check

(a) Use

- To check correspondence of data written to and that read from memory through write/read check.
- If the copy image is faulty.
- The following shows the memory names that correspond to each memory where check is made.

WORK0	Standard memory (MEMB/1)
WORK1	Standard memory (MEMB/2)
FILE0, 1	Memory of ASIC200 installed in the MFP board
FILE2, 3	Not used
FILE4, 5	Memory of ASIC200 installed in the DS board (only when DF-701 is mounted)

<Rough Check>

- A check is made for each memory to see if the image data reading and writing are correctly made in a very limited area.
- The progress of the check sequence is displayed in percentage. (calculated based on all checks WORK0/1, FILE0/1/4/5 constituting 100%)
- When the rough checks of all memories are completed, results are displayed beside the memory display (OK/NG).
  Rough check time: approx. 10 sec.

Typical rough check result display: Exemplary display when all memories have been checked okay

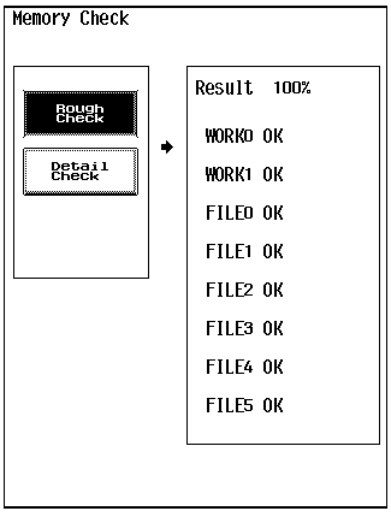

NOTE

- **Although FILE2 and FILE3 are not used with this machine, the result of a memory check displays always "OK."**

<Detail Check>

- A write check and a read check are repeated in all areas for each memory.
  NOTE
  - **For a write check, a specific write value is set and the specific value is written in all areas of the memory and the written data is thereafter read. This sequence is performed for all memories (WORK0/1, FILE0/1/4/5) (which forms one cycle of the check sequence).**
  - **When one cycle of the check sequence is completed, the write value is changed automatically and a new check cycle is performed. This sequence is repeated with the write value changed for each sequence.**
  - **Unlike the rough check, the detail check is not automatically terminated. The check cycle is repeated until the Stop key is pressed.**

- The progress of the check sequence is displayed in percentage. (calculated based on all checks WORK0/1, FILE0/1/4/5 constituting 100%)
  NOTE
  - **The check progress status display is 100% when one cycle of the check sequence is completed.**
  - **The check progress status display is automatically reset to 0% and restarted as soon as a new check sequence is started.**

- The detail check of all memories (one cycle) is completed in about 3 min.
- The press of the Stop key will terminate the detail check.
- If a write/read error is detected, NG appears beside the memory display and the check sequence is automatically terminated.

(b) Rough check procedure

1. Call the Service Mode to the screen.
2. Touch these keys in this order: [State Confirmation] -> [Memory / HDD Adj.] -> [Memory Check].
3. Touch [Rough Check].
4. Press the Start key to start the check procedure.
5. The procedure is automatically completed (in about 10 sec.) and the results are shown on the screen.
   NOTE
   - **The rough check procedure can be interrupted by pressing the Stop key.**

6. If the check results for WORK0 to 1 are NG, check the memory for connection or replace the memory with a new one.
   If the check results for FILE0 to 1 are NG, replace the MFP board with a new one.
   If the check results for FILE4 to 5 are NG, replace the DS board with a new one. (only when DF-701 is mounted)

(c) Detail check procedure

1. Call the Service Mode to the screen.
2. Touch these keys in this order: [State Confirmation] -> [Memory / HDD Adj.] -> [Memory Check].
3. Touch [Detail Check].
4. Press the Start key to start the detail check procedure.
   The check sequence is started and the current check progress status is displayed in percentage.
5. When the check progress status display is 100% after the start of the check sequence, the first check cycle is completed (which takes about 3 min.).
   The results are displayed on the screen. (The sequence has been checked okay, if NG does not appear.)
   The current check progress status display is associated with the latest check sequence.
   NOTE
   - **If a write/read error is detected, NG appears beside the memory display and the check cycle is automatically terminated.**
6. Press the Stop key at any timing to terminate the detail check procedure.
7. If the check results for WORK0 to 1 are NG, check the memory for connection or replace the memory with a new one.
   If the check results for FILE0 to 1 are NG, replace the MFP board with a new one.
   If the check results for FILE4 to 5 are NG, replace the DS board with a new one. (only when DF-701 is mounted)

(2) Compress / Decompression Check

(a) Use

- To check whether compression and decompression are carried out properly.
- If the copy image is faulty.

(b) Procedure

1. Call the Service Mode to the screen.
2. Touch these keys in this order: [State Confirmation] -> [Memory / HDD Adj.] -> [Compress / Decompression Check].
3. Pressing the Start key will automatically start to complete a compression/decompression check sequence.
4. The check result will be displayed.

(3) JPEG check

(a) Use

- To check whether compression and decompression are carried out properly.
- If the copy image is faulty.

(b) Procedure

1. Call the Service Mode to the screen.
2. Touch these keys in this order: [State Confirmation] -> [Memory / HDD Adj.] -> [JPEG check].
3. Pressing the Start key will automatically start to complete a compression/decompression check sequence.
4. The check result will be displayed.

(4) Memory Bus Check

(a) Use

- To check to see if image data is correctly transferred from scanner to memory, and from memory to printer.
- Bus check between scanner and memory has two steps; the scanner internal check step as internal processing and the check step between scanner and memory. If either of the two steps is NG, NG1 or NG2 is displayed respectively.
- The bus check is performed separately for the front side and the back side and the individual results are displayed.
- If the print image is faulty.

(b) Procedure

1. Call the Service Mode to the screen.
2. Touch these keys in this order: [State Confirmation] -> [Memory / HDD Adj.] -> [Memory Bus Check].
3. Select either [Scanner -> Memory], [Memory -> PRT], or both.
4. Pressing the Start key will start the memory bus check and be terminated automatically.
5. The check result will be displayed, [OK] or [NG].

(5) DSC Bus Check

(a) Use

- To check the connection between the DSC board and the scanner section when the optional security kit SC-508 is installed.
- When an error is detected after checking, NG1 or NG2 is displayed depending on the location of the board where the defect is found.

(b) Procedure

1. Call the Service Mode to the screen.
2. Touch these keys in this order: [State Confirmation] -> [Memory / HDD Adj.] -> [DSC Bus Check].
3. Select “Front side” or “Back side”, and touch [Scanner -> DSC].
   NOTE
   - **The DSC bus check for the back side can be performed only when DF-701 is mounted.**

4. Pressing the Start key will start the DSC bus check and be terminated automatically.
5. The check result will be displayed.

(6) HDD R/W Check

(a) Use

- To check to see if the hard disk is connected properly, and if read/write operation of the hard disk is correctly performed.
- When the hard disk is mounted.

(b) Procedure

1. Call the Service Mode to the screen.
2. Touch these keys in this order: [State Confirmation] -> [Memory / HDD Adj.] -> [HDD R/W Check].
3. Pressing the Start key will start the hard disk R/W check sequence and be terminated automatically.
4. The check result will be displayed, [OK] or [NG].

(7) HDD Format

(a) Use

- To format the hard disk.
- The function proceeds in the order of physical format to logical format.
- If the hard disk is yet to be formatted, the malfunction code “C-D010” will appear. Ignore this code and continue with the formatting procedure.
- When the hard disk is mounted. (Logical format)
- When the hard disk is to be initialized. (Physical format to logical format)

NOTE

- **As HDD formatting deletes Movie data, Voice data, OCR dictionary data, PDF/A font, and OCR font, and Unicode font you need to reinstall these data as necessary after using this function.**

(b) Procedure (Physical Format)

NOTE

- **Formatting the hard disk will erase all data contained in it.**

1. Call the Service Mode to the screen.
2. Touch these keys in this order: [State Confirmation] -> [Memory / HDD Adj.] -> [HDD Format].
3. Touch [Physical Format].
4. Press the Start key to start the physical format.
5. It stops automatically when the physical format completed.

   NOTE

   - **If [HDD Encryption Setting] is not set to "ON," when the physical format is completed and the main power switch is turned OFF/ON, a message that prompts you to set an encrypting word is displayed.**
   - **If you perform [HDD Encryption Setting], after setting an encrypting word, perform the logical format.**

6. Touch [Logical Format].
7. Press the Start key to start the logical format.
8. It stops automatically when the logical format completed.
9. Turn off the main power switch and turn it on again more than 10 seconds after.

(c) Procedure (Logical Format (only when set up with HDD replacement))

NOTE

- **Formatting the hard disk will erase all data contained in it.**

1. Call the Service Mode to the screen.
2. Touch these keys in this order: [State Confirmation] -> [Memory / HDD Adj.] -> [HDD Format].
3. Touch [Logical Format].
4. Press the Start key to start the formatting sequence.
5. The sequence will be automatically terminated as it is completed.
6. Turn off the main power switch and turn it on again more than 10 seconds after.

(8) SSD -> HDD Data Copy

- Not used.

11.18.8 Memory/HDD State

(1) Use

- To display the condition and amount of the memory and hard disk.

11.18.9 Color Regist

- Not used

11.18.10 Load Check

(1) Use

- To check each device (electric component) for proper condition by individually activating the load associated with the device.
- To identify faults at the time of troubleshooting.

NOTE

Take note of the following during the load check mode.

- **No malfunction is detected and no count is taken of consumables life and related items.**

- **Two or more devices (motors, clutches, solenoids, and fans) cannot be checked simultaneously.**
- **Detection of proper installation of various types of units and waste toner box does not function. During the check procedure, therefore, make sure that the unit in question is installed correctly or yet to be installed.**

(2) Procedure

1. Call the Service Mode to the screen.
2. Touch [State Confirmation] -> [Load Check].
3. Open the front door or the right door.
4. Touch [Start Load Check].
   Entry screen of the check code and the multi code appears.
5. Close the door opened on step 3.
6. Referring to the load check list, enter a check code.
7. Referring to the load check list, enter a multi code.
8. Press the Start key.
   When pressing the Start key, the specified load is activated. The Start key blinks in orange.
9. Check the load operation and output of signals.
10. Press the Stop key to stop the check operation and check the result.
    NOTE
    - **Depending on the type of load being activated, after the lapse of the specified time or after the transition to the specified state, the corresponding device automatically stops working.**
    - **When 'NG' is displayed, check the wiring and connectors.**

11. To check another load or signal output, repeat steps 6 to 10.
12. Turn OFF the main power switch and turn it ON again more than 10 seconds after.

NOTE

- **To exit from the load check mode, be sure to turn off and on the main power switch.**
  At the point when you display [Service Mode] -> [State Confirmation] -> [Load Check], MFP enters into load check mode. Regardless of whether load check is actually performed or not, the main power switch must be turned off and on to exit from load check mode.

(3) Load check list

Check code	Multi code	Symbol	Load name	Operation outline	Note
8	2	EL/K	Erase LED /K	Outputs erase LED. <At the time of start> Turns on erase LED/K low light intensity remote. Turns on erase LED/K. <At the time of stop> Turns off erase LED/K low light intensity remote. Turns off erase LED/K.	-
20	1	CL3	Tray1 paper feed clutch	Drives the specified clutch.	-
	2	CL1	Tray2 paper feed clutch		-
	3	CL7	Bypass paper feed clutch		-
21	1	CL2	Tray2 vertical transport clutch	Drives the specified clutch.	-
	2	CL4	Registration clutch		-
23	1	-	Bypass tray lift-up plate elevator motor /down	Drives the transport motor in the specified direction.	The motor stops when the upper limit sensor or lower limit is detected.
	3	SD1	Bypass pick-up solenoid	Turns ON the solenoid.	The solenoid will stop after a lapse of predetermined time.
	4	M12	Tray1 lift-up motor	Starts the lift-up operation.	The motor stops when the upper limit sensor or lower limit is detected.
	5	M13	Tray2 lift-up motor		The motor stops when the upper limit sensor or lower limit is detected.
	6	M113	Tray3 lift-up motor		Only when PC-110 or PC-210 is mounted. The motor stops when the upper limit sensor or lower limit is detected.

	7	M123	Tray4 lift-up motor		Only when PC-210 is mounted. The motor stops when the upper limit sensor or lower limit is detected.
	9	M134	LCT elevator motor moving up		Only when PC-410 is mounted. The motor stops when the upper limit sensor or lower limit is detected.
	10		LCT elevator motor moving down		
	11	M133	Shifter motor move to home position	Starts the shifter operation.	Only when PC-410 is mounted.
	12		Shifter motor shift operation		Only when PC-410 is mounted.
28	7	M131	LCT paper feed motor high speed	Drives the motor at the specified speed.	Only when PC-410 is mounted. The paper lifting plate must not be at upper limit position.
	8		LCT paper feed motor low speed		
	9		LCT paper feed motor minimum speed		
	10	M132	LCT vertical transport motor high speed		Only when PC-410 is mounted.
	11		LCT vertical transport motor low speed		
	12		LCT vertical transport motor minimum speed		
	13	M111	Tray3 paper feed motor high speed		Only when PC-110 or PC-210 is mounted. The paper lifting plate must not be at upper limit position.
	14		Tray3 paper feed motor low speed		
	15		Tray3 paper feed motor minimum speed		
	16	M121	Tray4 paper feed motor high speed		Only when PC-210 is mounted. The paper lifting plate must not be at upper limit position.
	17		Tray4 paper feed motor low speed		
	18		Tray4 paper feed motor minimum speed		
	19	M112	Tray3 vertical transport motor high speed		Only when PC-110 or PC-210 is mounted.
	20		Tray3 vertical transport motor low speed		
	21		Tray3 vertical transport motor minimum speed		
	22	M122	Tray4 vertical transport motor high speed		Only when PC-210 is mounted.
	23		Tray4 vertical transport motor low speed		
	24		Tray4 vertical transport motor minimum speed		
32	1	M14	Polygon motor high speed	Drives the motor at the specified speed. Drives the power supply cooling fan at the same timing.	-
	2		Polygon motor middle speed		-
	3		Polygon motor low speed		-
40	1	M1	Transport motor high speed	Drives the motor at the specified speed. **NOTE** **Perform the operation check after the drum unit/K and the transfer belt unit have been removed. *1**	-
	2		Transport motor low speed		
	3		Transport motor minimum speed		
42	1	FM1	Power supply cooling fan	Drives the specified fan.	-
	2	FM2	Transfer belt cleaner cooling fan		-
	3	-	Not used.		-
	9	FM8	Paper cooling fan		-
	11	FM13	Ozone fan full speed		-
	12		Ozone fan half speed		

45	1	M3	Fusing motor high speed	Drives the motor at the specified speed.	-
	3		Fusing motor low speed		-
	4		Fusing motor minimum speed		-
	5		Fusing motor warming-up speed		-
	6		Fusing motor standby speed		-
	7	M11	Fusing pressure motor drive (pressure)	Starts the pressure/release operation of the pressure roller. **NOTE** **Be sure to perform the release operation whenever the pressure/release operation has been performed. *2**	-
	8		Fusing pressure motor drive (release)		
81	0	CL6	ADU transport clutch	Drives the specified clutch.	-
83	0	SD3	Gate switch solenoid	Turns ON the solenoid.	The solenoid will stop after a lapse of predetermined time.
84	1	M4	Reverse motor high speed (Normal rotation)	Drives the motor at the specified speed and direction.	-
	2		Reverse motor low speed (Normal rotation)		-
	3		Reverse motor minimum speed (Normal rotation)		-
	4		Reverse motor high speed (Reverse rotation)		-
	5		Reverse motor low speed (Reverse rotation)		-
	6		Reverse motor minimum speed (Reverse rotation)		-
85	1	M5	ADU transport motor high speed	Drives the motor at the specified speed.	-
	2		ADU transport motor low speed		-
	3		ADU transport motor minimum speed		-

NOTE
- ***1: The cleaning blades of the drum unit/K and the transfer belt unit, if driven with no toner deposited, may be curved to warp.**
- ***2: The pressure roller, if left to stand in the pressed position, may be deformed. The drive gear may be damaged if the fusing unit is removed with the pressure roller in the pressed position.**

11.18.11 Adjustment Data List

(1) Use

- To display the adjustment and setting value set in the main body.
- Use to check the adjustment and setting value set in the main body.

11.18.12 Self-diagnostic

- Conducts diagnosis for the defective and replaced areas of memory and various boards in main body when a trouble code is output or a trouble such as main body activation failure occurs, and displays a suspected defective part or connection between the specific board and main body board.

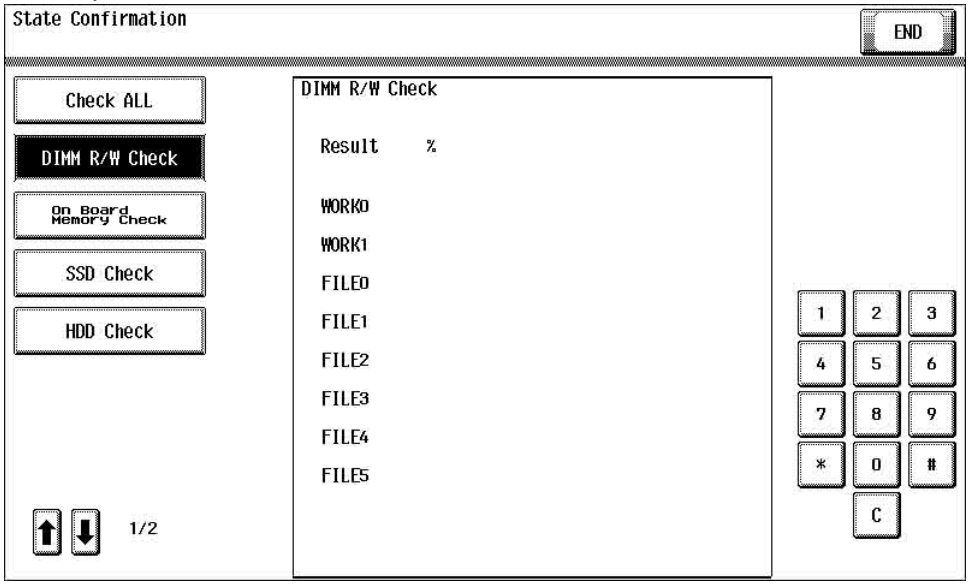

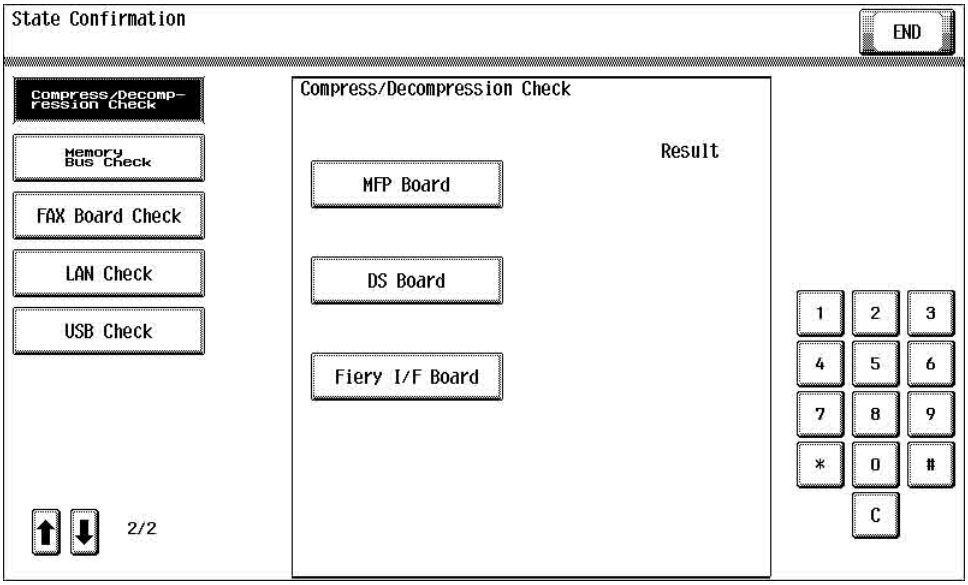

(1) Check All

- Diagnoses DIMM R/W, On Board Memory, SSD, and HDD collectively, and specifies the cause of trouble.
- The following table shows the check method and countermeasures.

Check mode	Check details	Corruption details	Next Action
DIMM R/W Check	• Execute Read/Write Check for DIMM on the MFP board. • Execute the same check as [Rough Check] under [Memory/HDD Adj.] -> [Memory Check].	• DIMM on the MFP board • Corruption of CPU	• Reseat DIMM. • Check the connectors on the MFP board.
On Board Memory Check			
R/W Check	Execute Read/Write Check for On Board Memory on the MFP board.	• Corruption of On Board Memory on the MFP board • Corruption of battery	Replace the MFP board.
Pattern Check	Execute Read Check for the pattern ready written in the area secured in On Board Memory on the MFP board for Read.	• The pattern data for test cannot be read because the pattern data for test has been rewritten, or a contact failure of the electrical parts occurred. • The correct information cannot be read because the data in the area for Read has been modified due to software failure, or a failure of the electrical parts occurred.	• Clear On Board Memory completely (equivalent to a new one) • Replace the MFP board.
SSD Check			
R/W Check	Execute Read/Write for the SSD board	• Connection failure of the SATAI/F connector of the SSD board • Corruption of SSD device • Corruption of MFP board	• Reseat the SSD board. • Replace the SSD board. • Replace the MFP board.
Pattern Check	Execute Read Check for the pattern ready written in the area secured in SSD.	• The pattern data for test cannot be read because the pattern data for test has been rewritten, or a contact failure of the electrical parts occurred. • The correct information cannot be read because the data in the area for Read has been modified due to software failure, or a failure of the electrical parts occurred.	• Reseat the SSD board. • Replace the SSD board.
HDD Check			
R/W Check	Execute Read/Write for HDD.	• HDD cable failure • HDD failure • MFP board failure	• Check the HDD cable connection. • Replace the HDD cable. • Replace HDD. • Replace the MFP board.
Self-diagnostic (I/F Check)	Check whether the communications between HDD and MFP are normal.	Evaluate OK if there is any response returned from HDD, and NG if there is no response.	Check the HDD cable connection.

Self-diagnostic (Memory Check)	Execute the buffer test and the media test. • Buffer test Execute Read/Write Test for the buffer memory of HDD. Transfer the data by DMA to check whether the buffer memory works normally. • Media test Execute Read/Write Test for the disks of HDD. Check whether the disks, motor, and head works normally. Use the reserved area for the test.	Retrieve the test log, and display existence of error.	Replace HDD.
Compress/Decompression Check			
MFP Board	Execute the compression/extension test for the MFP board.	Corruption of the compressed/ extended circuits or memory of MFP.	Replace the MFP board.
DS Board	Execute the compression/extension test for the DS board.	Corruption of the compressed/ extended circuits or memory of MFP board.	• Remove and insert the DS board. • Replace the DS board.
Fiery I/F Board	Not used		
Memory Bus Check			
Input Image Bus Check (CCD)	Execute the input image bus test for the MFP board.	• Connection failure of the CCD I/F connector. • Corruption of the input image circuit or image bus of MFP board.	• Check the connections. • Replace the CCD cable. • Replace the MFP board.
Input Image Bus Check (CIS)	Execute the input image bus test for the DS board.	• Connection failure of the DS board I/ F connector. • Corruption of the input image circuit or image bus of DS board.	• Check the connections. • Replace the DF cable. • Replace the DS board. • Replace DF.
Output Image Bus Check	Execute the input image bus test for the MFP board.	Corruption of the input image circuit or image bus of MFP board.	Replace the MFP board.

NOTE

- **It takes approx. two minutes for check if all items are OK.**
- **When NG is detected, check operation may stop in the item detected NG. (Not allow moving to the following item) When the check operation is stopped five minutes or more in a specific item, certain trouble may occur in the item stopped. In this case, turn the main power switch OFF for stopping the self diagnosis. After that, investigate the items on which the check function is disabled and take countermeasures.**

(a) Procedure (from SERVICE MODE menu)

1. Call the Service Mode to the screen.
2. Touch these keys in this order: [State Confirmation] -> [Self-diagnostic] -> [Check All].
3. Press the Start key to start the check procedure.
4. When the check procedure is completed, the results are shown on the screen.
   If the check results are NG, take measures upon confirmation of the corruption details mentioned above and Next action.

* Press the Stop key to interrupt the check sequence.

(b) Procedure (from main power switch ON)

1. Open the front door.
2. Turn the main power switch on while pressing the power key.
   After a short beep sound is made once, release the power key and close the front door.
   Wait to display the self diagnosis (full check) screen.
3. After displaying the self diagnosis screen, press the start key.
   The self diagnosis (full check) is started.
   The result of the diagnosis is displayed for every item. (OK/NG)
4. After finished the diagnosis for all items, turn the main power switch off.
5. If there is an item displayed NG, investigate the NG item and take countermeasures.

(2) DIMM R/W Check

- Execute the following procedure for individual diagnosis. For details, see "I.11.18.12.(1) Check All

(a) Procedure

1. Call the Service Mode to the screen.
2. Touch these keys in this order: [State Confirmation] -> [Self-diagnostic] -> [DIMM R/W Check].
3. Press the Start key to start the check procedure.
4. When the check procedure is completed, the results are shown on the screen.

(3) On Board Memory Check

- Execute the following procedure for individual diagnosis. For details, see "I.11.18.12.(1) Check All

(a) Procedure

1. Call the Service Mode to the screen.
2. Touch these keys in this order: [State Confirmation] -> [Self-diagnostic] -> [On Board Memory Check].

3. Select the item you would like to check.
4. Press the Start key to start the check procedure.
5. When the check procedure is completed, the results are shown on the screen.

(4) SSD Check

- Execute the following procedure for individual diagnosis. For details, see "I.11.18.12.(1) Check All

(a) Procedure

1. Call the Service Mode to the screen.
2. Touch these keys in this order: [State Confirmation] -> [Self-diagnostic] -> [SSD Check].
3. Select the item you would like to check.
4. Press the Start key to start the check procedure.
5. When the check procedure is completed, the results are shown on the screen.

(5) HDD Check

- Execute the following procedure for individual diagnosis. For details, see "I.11.18.12.(1) Check All

(a) Procedure

1. Call the Service Mode to the screen.
2. Touch these keys in this order: [State Confirmation] -> [Self-diagnostic] -> [HDD Check].
3. Select the item you would like to check.
4. Press the Start key to start the check procedure.
5. When the check procedure is completed, the results are shown on the screen.

(6) Compress/Decompression Check

- Execute the following procedure for individual diagnosis. For details, see "I.11.18.12.(1) Check All

(a) Procedure

1. Call the Service Mode to the screen.
2. Touch these keys in this order: [State Confirmation] -> [Self-diagnostic] -> [Compress/Decompression Check].
3. Select the item you would like to check.
4. Press the Start key to start the check procedure.
5. When the check procedure is completed, the results are shown on the screen.

(7) Memory Bus Check

- Execute the following procedure for individual diagnosis. For details, see "I.11.18.12.(1) Check All

(a) Procedure

1. Call the Service Mode to the screen.
2. Touch these keys in this order: [State Confirmation] -> [Self-diagnostic] -> [Memory Bus Check].
3. Select the item you would like to check.
4. Press the Start key to start the check procedure.
5. When the check procedure is completed, the results are shown on the screen.

(8) FAX Board Check

- If the FAX board is installed, execute the FAX board test and the data transmission sound test.
- The following table shows the check method and countermeasures.

Check details	Corruption details	Next Action
• Execute the FAX board test. • Execute the data transmission sound test.	• Connection failure of the cables connected to the FAX board • Failure of the FAX board	• Replace the FAX signal cable. • Replace the FAX power supply cable. • Replace the FAX board. • Replace the MFP board.

(a) Procedure

1. Call the Service Mode to the screen.
2. Touch [State Confirmation] -> [Self-diagnostic] -> [FAX Board Check].
3. Select the line to be checked between 1 to 4, and touch [Signal Send Test], [Signal Receive Test], or [NCU Test]. For the details of each item, refer to I.11.19.11 Fax Test-Signal Send Test
4. Select a test item.
5. Select the parameter you would like to test.
6. Press the Start key to start the check procedure.

(9) LAN check

- Execute the Ping test.

(a) Procedure

1. Call the Service Mode to the screen.
2. Touch these keys in this order: [State Confirmation] -> [Self-diagnostic] -> [LAN Check].
3. Input IP address of destination with the numeric keypad.

4. Press the Start key to start the check procedure.
5. When the check procedure is completed, the results are shown on the screen.
6. In case of NG result
   - The network set defect -> Make sure the network of the unit.
   - Corruption of the LAN connector of the MFP board -> Replace the MFP board
   - Connection failure of the LAN cable due to breakage of the claw -> Replace the LAN cable.

(10) USB check

- Execute the test to check whether the USB board operates normally.

(a) Procedure

1. Call the Service Mode to the screen.
2. Touch these keys in this order: [State Confirmation] -> [Self-diagnostic] -> [USB Check].
3. Press the Start key to start the check procedure.
4. When the check procedure is completed, the results are shown on the screen (NG is displayed if no USB device is installed).
5. In case of NG result
   - Connection failure of the USB connector of the MFP board -> Replace the MFP board.
   - Replace each USB device (authentication device, etc.).

11.19 Test Mode

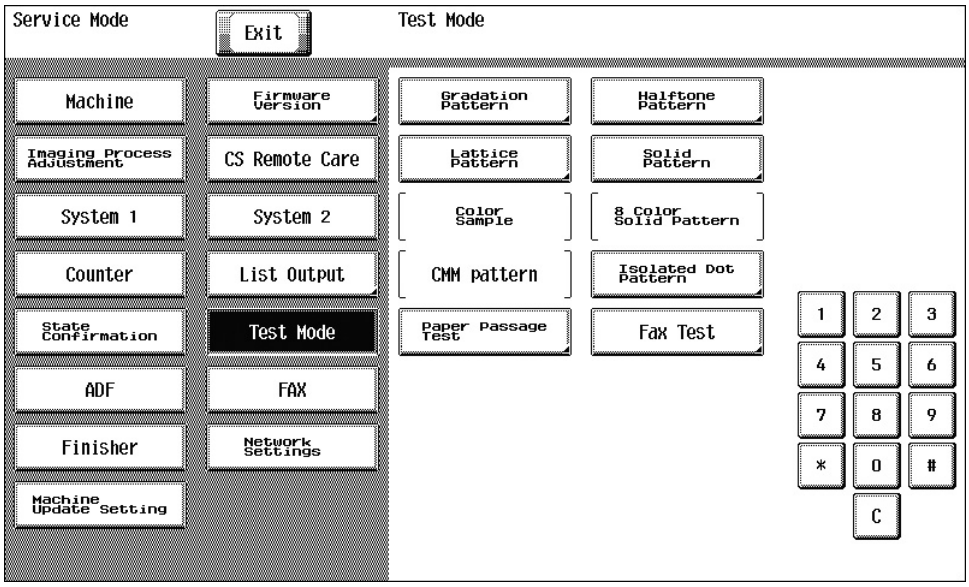

- To check the image on the printer side by letting the machine produce various types of test pattern. It also tests the printing operation in paper passage test, as well as the fax transmission.
- The machine searches through the paper sources in the order of tray 2, tray 3, tray 4, and tray 1 for paper of the maximum size for printing.

11.19.1 Procedure for test pattern output

1. Touch [Test Mode] to display the test mode menu.
2. Touch the desired test pattern key.
3. Set up the desired functions and press the Start key.

11.19.2 Gradation Pattern

(1) Use

- To produce a gradation pattern.
- Used for checking gradation reproducibility.

(a) Test pattern



e.g.
- SINGLE
- HYPER
- Gradation
- 256 gradations

- Black (1PC)

(2) Procedure

- Copies (“1” to 999)
- Select “SINGLE” (single copy) or MULTI (multi copy).
- Select FEET or “HYPER”.
- Select “Gradation”, Resolution, Error diffusion or Hybrid Error Diffusion if HYPER has been selected.
- Select“1-Sided”, 2-Side1 or 2-Side2.
  - 2-Side1: The same pattern is printed on both front and back sides.
  - 2-Side2: The front side is blank and the pattern is printed on the back side.
- Select “12 Gradations”, 24 Gradations or 256 Gradations.

11.19.3 Halftone Pattern

(1) Use

- To produce a solid halftone pattern.
- Used for checking uneven density and pitch noise.

(a) Test pattern



e.g.

- SINGLE
- HYPER
- Gradation
- Black (1PC)
- Density: 255

(2) Procedure

- Copies (“1” to 999)
- Select “SINGLE” (single copy) or MULTI (multi copy).
- Select FEET or “HYPER.”
- Select “Gradation”, Resolution, Error diffusion or Hybrid Error Diffusion if HYPER has been selected.
- Select “1-Sided”, 2-Side1 or 2-Side2.
  - 2-Side1: The same pattern is printed on both front and back sides.
  - 2-Side2: The front side is blank and the pattern is printed on the back side.
- Type the density level (0 to “255”).

11.19.4 Lattice Pattern

(1) Use

- To produce a lattice pattern.
- Used for checking fine line reproducibility and uneven density.
- A reverse pattern is also used to check for fine line reproducibility of white letters on a solid background.

(a) Test pattern

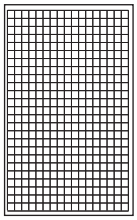

e.g.

- SINGLE
- FEET
- Black (1PC)
- CD Width: 5
- FD Width: 5
- Density: 255
- Normal

(2) Procedure

- Copies (“1” to 999)
- Select “SINGLE” (single copy) or MULTI (multi copy).
- Select “FEET” or HYPER.

- Select “Gradation”, Resolution, Error diffusion or Hybrid Error Diffusion if HYPER has been selected.
- Select “1-Sided”, 2-Side1 or 2-Side2.
  - 2-Side1: The same pattern is printed on both front and back sides.
  - 2-Side2: The front side is blank and the pattern is printed on the back side.
- Enter CD width and FD width (0 to 191 dots).
- Type the density level (0 to "255").
- Select “Normal” or Reverse.
- Select “600dpi” or 1200dpi.

11.19.5 Solid Pattern

(1) Use

- To produce solid patterns.
- Used for checking reproducibility of image density.

(a) Test pattern

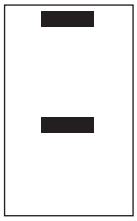

e.g.
- SINGLE
- HYPER
- Gradation
- Density: 255

(2) Procedure

- Copies (“1” to 999)
- Select “SINGLE” (single copy) or MULTI (multi copy).
- Select FEET or “HYPER.”
- Select “Gradation”, Resolution, Error diffusion or Hybrid Error Diffusion if HYPER has been selected.
- Type the density level (0 to “255”).

11.19.6 Color Sample

- Not used

11.19.7 8 Color Solid Pattern

- Not used

11.19.8 CMM pattern

- Not used

11.19.9 Isolated Dot Pattern

(1) Use

- Output the test print of the isolated point pattern.

(a) Test pattern

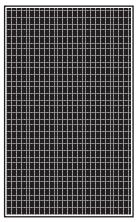

e.g.
- SINGLE
- HYPER
- Gradation
- Pattern 1
- Dot: 10
- Density: 255

(2) Procedure

- Copies (“1” to 999)
- Select “SINGLE” (single copy) or MULTI (multi copy).
- Select “FEET” or HYPER.

- Select “Gradation”, Resolution, Error diffusion, or Hybrid Error Diffusion if HYPER has been selected.
- Select “1-Sided”, 2-Side1 or 2-Side2.
  - 2-Side 1: The same pattern is printed on both front and back sides.
  - 2-Side 2: The front side is blank and the pattern is printed on the back side.
- Select “Pattern 1” or Pattern2.
  - Pattern 1: Output the isolated points of whole area.
  - Pattern 2: Isolated point pattern with the predetermined intervals.
- Type the dot level (“1” to 10).
- Type the density level (0 to “255”).

11.19.10 Paper Passage Test

(1) Use

- To test the printing operation in paper passage test.
- Use to check the printing operation in paper passage test from each paper source.

(2) Procedure

1. Call the Service Mode to the screen.
2. Touch these keys in this order: [Test Mode] -> [Paper Passage Test].
3. Touch [Select Tray] and select the paper feed tray to be tested.
4. If you select “Manual” in step 3, touch [Paper Size] and select a paper size.
5. Touch [Paper Type] and select a paper type.
6. Press the Start key to start the paper passage test.
7. Pressing the Stop key will stop operation.

11.19.11 Fax Test-Signal Send Test

- It will be displayed only when the optional fax kit FK-511 is mounted.

(1) Use

- Image information signals, control signals and DTMF can be individually output.
- Signal sounds are monitored by the monitor speaker.
- When the optional fax kit FK-511 (line 2) is mounted, Line 2 can be specified.
- When the optional fax kit FK-508 (line 3) is mounted, Line 3 can be specified.
- When the optional fax kit FK-508 (line 4) is mounted, Line 4 can be specified.

(2) Procedure

1. Touch [Service Mode] -> [Test Mode] -> [FAX Test], in that order.
2. Select the [Line1], [Line2], [Line3] or [Line4], and touch the [Signal Send Test].
3. Select a test item.
4. Select the parameter you would like to test.
5. Press the Start key.
   (In order to move to another test, select the next test item after pressing the Stop key.)

NOTICE

- Signal is output from pressing [Start] to pressing [Stop].
- To check Line 1, [Administrator Settings] -> [Fax Settings] -> [Line Parameter Setting] -> [Line Monitor Sound] should be set to “ON”.
- To check Line 2, [Administrator Settings] -> [Fax Settings] -> [Multi Line Settings] -> [Fax Line 2] -> [Line Parameter Setting] -> [Line Monitor Sound] should be set to “ON”.
- To check Line 3, [Administrator Settings] -> [Fax Settings] -> [Multi Line Settings] -> [Fax Line 3] -> [Line Parameter Setting] -> [Line Monitor Sound] should be set to “ON”.
- To check Line 4, [Administrator Settings] -> [Fax Settings] -> [Multi Line Settings] -> [Fax Line 4] -> [Line Parameter Setting] -> [Line Monitor Sound] should be set to “ON”.

(a) V34 Main CH: Default setting

- 33,600

(b) V34 Main CH: Setting range

- 2,400 to “33,600” (step: 2,400)

(c) V34 Control CH: Default setting

- CTL CH

(d) V34 Control CH: Setting item

- “CTL CH”
- INFOc
- INFOa
- ToneA
- ToneB

(e) V8: Default setting

- CM

(f) V8: Setting item
- "CM"
- JM

(g) V17: Default setting
- 14,400bps

(h) V17: Setting item
- "14,400bps"
- 12,000bps
- 9,600bps
- 7,200bps

(i) V29: Default setting
- 9,600bps

(j) V29: Setting item
- "9,600bps"
- 7,200bps

(k) V27ter: Default setting
- 4,800bps

(l) V27ter: Setting item
- "4,800bps"
- 2,400bps

(m) V21
- No parameters

(n) PB: Default setting
- 0

(o) PB: Setting item
- "0" to 9, *, #, A, B, C, D

(p) DP: Default setting
- 0

(q) DP: Setting range
- "0" to 9

(r) Special Tone: Default setting
- 1,100Hz

(s) Special Tone: Setting item
- "1,100Hz"
- 1,300Hz
- 1,650Hz
- 2,100Hz

(t) Optional Tone: Default setting
- 200Hz

(u) Optional Tone: Setting range
- "200" to 4,000Hz (step: 100Hz)

(v) PB Tone (High): Default setting
- 1,209Hz

(w) PB Tone (High): Setting item
- "1,209Hz"
- 1,336Hz
- 1,477Hz
- 1,633Hz

(x) PB Tone (Low): Default setting

- 697Hz

(y) PB Tone (Low): Setting item

- "697Hz"
- 770Hz
- 852Hz
- 941Hz

(z) Pseudo Ring

- No parameters

11.19.12 Fax Test-Signal Receive Test

- It will be displayed only when the optional fax kit FK-511 is mounted.

(1) Use

- Check a signaling tone by connecting the machine to the line to output a test signal of the fax board.
- Signal sounds are monitored by the monitor speaker.
- When the optional fax kit FK-511 (line 2) is mounted, Line 2 can be specified.
- When the optional fax kit FK-508 (line 3) is mounted, Line 3 can be specified.
- When the optional fax kit FK-508 (line 4) is mounted, Line 4 can be specified.

(2) Procedure

1. Touch [Service Mode] -> [Test Mode] -> [FAX Test], in that order.
2. Select the [Line1], [Line2], [Line3] or [Line4], and touch the [Signal Receive Test].
3. Select a test item.
4. Select the parameter you would like to test.
5. Press the Start key.
   (In order to move to another test, select the next test item after pressing the Stop key.)

NOTICE

- Signal is output from pressing [Start] to pressing [Stop].
- To check Line 1, [Administrator Settings] -> [Fax Settings] -> [Line Parameter Setting] -> [Line Monitor Sound] should be set to "ON".
- To check Line 2, [Administrator Settings] -> [Fax Settings] -> [Multi Line Settings] -> [Fax Line 2] -> [Line Parameter Setting] -> [Line Monitor Sound] should be set to "ON".
- To check Line 3, [Administrator Settings] -> [Fax Settings] -> [Multi Line Settings] -> [Fax Line 3] -> [Line Parameter Setting] -> [Line Monitor Sound] should be set to "ON".
- To check Line 4, [Administrator Settings] -> [Fax Settings] -> [Multi Line Settings] -> [Fax Line 4] -> [Line Parameter Setting] -> [Line Monitor Sound] should be set to "ON".
- The status of testing or results of tests are shown in the title line as follows

RCV	Waiting signals
OK/NG	Results of signal reception

(a) V17: Default setting

- 14,400bps

(b) V17: Setting item

- "14,400bps"
- 12,000bps
- 9,600bps
- 7,200bps

(c) V29: Default setting

- 9,600bps

(d) V29: Setting item

- "9,600bps"
- 7,200bps

(e) V27ter: Default setting

- 4,800bps

(f) V27ter: Setting item

- "4,800bps"
- 2,400bps

(g) V21

- No parameters

(h) PB: Default setting

- 0

(i) PB: Setting item

- “0” to 9, *, #, A, B, C, D

(j) Special Tone: Default setting

- 1,100Hz

(k) Special Tone: Setting item

- “1,100Hz”
- 1,300Hz
- 2,100Hz

11.19.13 Fax Test-NCU TEST

- It will be displayed only when the optional fax kit FK-511 is mounted.

(1) Use

- To check the operation of NCU.
- To check Line 2, [Administrator Settings] -> [Fax Settings] -> [Multi Line Settings] -> [Fax Line 2] -> [Line Parameter Setting] -> [Line Monitor Sound] should be set to “ON”.
- To check Line 3, [Administrator Settings] -> [Fax Settings] -> [Multi Line Settings] -> [Fax Line 3] -> [Line Parameter Setting] -> [Line Monitor Sound] should be set to “ON”.
- To check Line 4, [Administrator Settings] -> [Fax Settings] -> [Multi Line Settings] -> [Fax Line 4] -> [Line Parameter Setting] -> [Line Monitor Sound] should be set to “ON”.

(2) Procedure

1. Touch [Service Mode] -> [Test Mode] -> [FAX Test], in that order.
2. Select the [Line1], [Line2], [Line3] or [Line4], and touch the [NCU TEST].
3. Select a test item.
4. Press the Start key.
   (In order to move to another test, select the next test item after pressing the Stop key.)

NOTE

- **When CML / CTL / TEL relay test is selected and the Start key is pressed, ON is displayed in the parameter and relay is turned to ON. When [Stop] is pressed, relay is turned OFF.**
- **When the DC-LOOP detection test is selected and Start key is pressed, DT=0001 is shown in the title row in case of detecting the DC-LOOP. If not detected, DT=0000 is displayed.**

Contents of test	Device to be tested
CML Relay	**IC201, IC202**
CTL Relay	**RL201**
TEL Relay	**RL501 ***
DC-LOOP Detect	
Speaker	
Outside Ring Send	
Audio Response Send	

- *** RL501 mounts only the Japanese.**

11.20 ADF

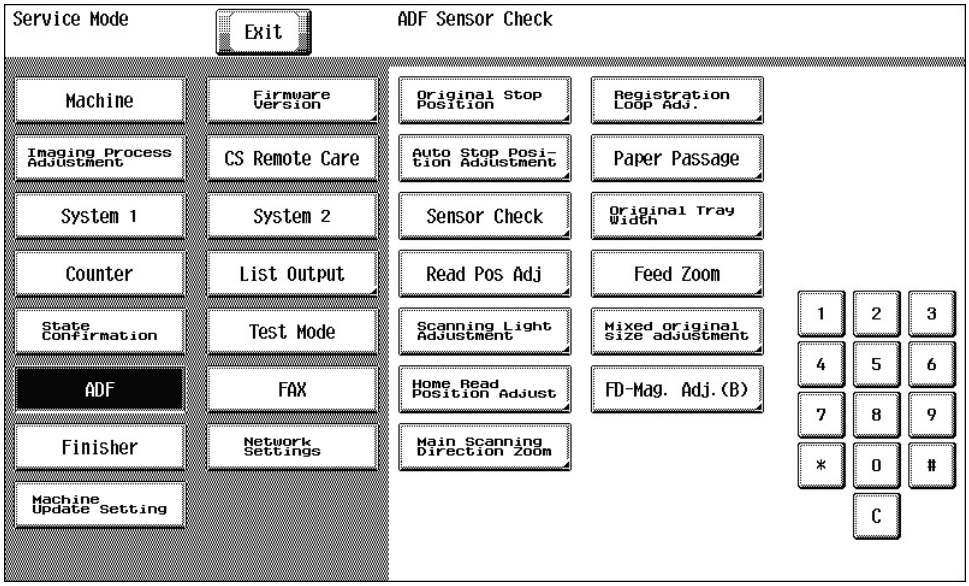

11.20.1 Original Stop Position

(1) Use

- To manually adjust the original stop position and the read position in each of the DF modes.
- When the result is Unable in the automatic adjustment of the original stop position.

(2) Procedure

(a) Sub Scanning Direction 1-Side

NOTE

- **Before performing this adjustment, the feed zoom adjustment needs to be complete.**
  I.11.20.8 Feed Zoom

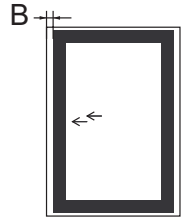

- The difference in the widths of B between the chart and the copy sample should fall within the following target.

Target	0 ± 2.0 mm
Setting range	-4.0 mm to +4.0 mm (1 step: 0.1 mm)

1. Place the chart in the document feed tray (with the side having an arrow facing up).
2. Make a full size copy of the chart.
3. Check that the difference in the widths of B between the chart and the copy sample falls within the target.
4. Call the Service Mode to the screen.
5. Touch [ADF] -> [Original Stop Position].
6. Touch [Sub Scanning Direction 1-Side].
7. Enter the value from the 10-key pad. (Press the [+/-] key to change the +/- code.)
   - If the difference in the widths of B is greater than the target, enter the + value.
   - If the difference in the widths of B is smaller than the target, enter the - value.
8. Touch [Test Copy].
9. Select the tray loading paper for the test copy.
10. Place the chart in the document feeding tray.
11. Press the start key, and check the difference in the width B between the chart and the discharged copy sample.
12. Touch [END] twice.
13. Touch [Exit] on the Service Mode screen.
14. Turn OFF the main power switch, wait for 10 sec., then turn the switch ON.

(b) Sub Scanning Direction 2-Side

NOTE

- **Before performing this adjustment, the feed zoom adjustment needs to be complete.**
  I.11.20.8 Feed Zoom

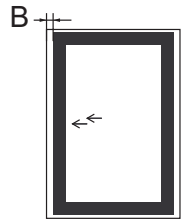

- The difference in the widths of B between the chart and the copy sample should fall within the following target.

Target	0 ± 2.0 mm
Setting range	-4.0 mm to +4.0 mm (1 step: 0.1 mm)

1. Place the chart in the document feed tray (with the side having an arrow facing up).
2. Make a full size copy of the chart.
3. Check that the difference in the widths of B between the chart and the copy sample falls within the target.
4. Call the Service Mode to the screen.
5. Touch [ADF] -> [Original Stop Position].
6. Touch [Sub Scanning Direction 2-Side].
7. Enter the value from the 10-key pad. (Press the [+/-] key to change the +/- code.)
   - If the difference in the widths of B is greater than the target, enter the + value.
   - If the difference in the widths of B is smaller than the target, enter the - value.
8. Touch [Test Copy].
9. Select the tray loading paper for the test copy.
10. Touch [2].
11. Touch [2-sided -> 2-sided].
12. Place the chart in the document feeding tray.
13. Press the start key, and check the difference in the width B between the chart and the discharged copy sample.
14. Touch [END] twice.
15. Touch [Exit] on the Service Mode screen.
16. Turn OFF the main power switch, wait for 10 sec., then turn the switch ON.

(c) Main Scanning (Front)

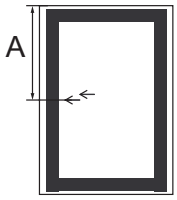

- The difference in the widths of A between the chart and the copy sample should fall within the following target.

Target	0 ± 2.0 mm
Setting range	-4.4 mm to +4.4 mm (1 step: 0.1 mm)

1. Place the chart in the document feed tray (with the side having an arrow facing up).
2. Make a full size copy of the chart.
3. Check that the difference in the widths of A between the chart and the copy sample falls within the target.
4. Call the Service Mode to the screen.
5. Touch [ADF] -> [Original Stop Position].
6. Touch [Main Scanning (Front)].
7. Enter the value from the 10-key pad. (Press the [+/-] key to change the +/- code.)
   - If the difference in the widths of A is greater than the target, enter the + value.
   - If the difference in the widths of A is smaller than the target, enter the - value.
8. Touch [Test Copy].
9. Select the tray loading paper for the test copy.
10. Place the chart in the document feeding tray.
11. Press the start key, and check the difference in the width A between the chart and the discharged copy sample.
12. Touch [END] twice.
13. Touch [Exit] on the Service Mode screen.
14. Turn OFF the main power switch, wait for 10 sec., then turn the switch ON.

(d) Main Scanning (Back)

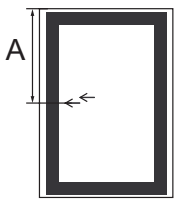

- The difference in the widths of A between the chart and the copy sample should fall within the following target.

Target	0 ± 2.0 mm
Setting range	-4.4 mm to +4.4 mm (1 step: 0.1 mm)

1. Place the chart in the document feed tray (with the side having an arrow facing up).
2. Make a full size copy of the chart.
3. Check that the difference in the widths of A between the chart and the copy sample falls within the target.
4. Call the Service Mode to the screen.
5. Touch [ADF] -> [Original Stop Position].
6. Touch [Main Scanning (Back)].
7. Enter the value from the 10-key pad. (Press the [+/-] key to change the +/- code.)
   - If the difference in the widths of A is greater than the target, enter the + value.
   - If the difference in the widths of A is smaller than the target, enter the - value.
8. Touch [Test Copy].
9. Select the tray loading paper for the test copy.
10. Touch [2].
11. Touch [2-sided -> 2-sided].
12. Place the chart in the document feeding tray.
13. Press the start key, and check the difference in the width A between the chart and the discharged copy sample.
14. Touch [END] twice.
15. Touch [Exit] on the Service Mode screen.
16. Turn OFF the main power switch, wait for 10 sec., then turn the switch ON.

11.20.2 Registration Loop Adj.

(1) Use

- To adjust the length of the loop to be formed in paper before the registration rollers.
- When an original misfeed or skew occurs.

(2) Procedure

1. Call the Service Mode to the screen.
2. Touch [ADF] -> [Registration Loop Adj].
3. Select either [1-Side] or [Second Side] for the adjustment.
4. Touch clear and change the setting value using the 10-key pad. (Press the [+/-] key to change the +/- code.)
   The amount of loop increases by the amount of positive (+) value and decreases by the amount of negative (-) value.
5. Touch [END].
6. Touch [Exit] on the Service Mode screen.
7. Turn OFF the main power switch, wait for 10 sec., then turn the switch ON.

(3) Default setting

- 0

(4) Setting range

- -5 mm to + 5 mm (in 1 mm increments)

11.20.3 Auto Stop Position Adjustment

(1) Use

- To automatically adjust the read position for the Sub Scanning Direction.
- To check skew feed.
- When DF has been replaced.
- When CIS module has been replaced.

NOTE

- **Before performing this adjustment, the feed zoom adjustment needs to be complete.**
  I.11.20.8 Feed Zoom

(2) Procedure

(a) Sub Scanning Direction 1-Side

1. Call the Service Mode to the screen.
2. Touch [ADF] -> [Auto Stop Position Adjustment].
3. Touch [Sub Scanning Direction 1-Side].
4. Place the chart in the document feed tray (with the side having an arrow facing up).
5. Press the Start key.
6. Make sure that result is OK. Then, touch [SET].
7. Touch [END].
8. Touch [Exit] on the Service Mode screen.
9. Turn OFF the main power switch, wait for 10 sec., then turn the switch ON.

NOTE

If the result is Unable:

- **Check and correct the skew of the document.**
- **Manually correct the value of [Original Stop Position].**
  I.11.20.1 Original Stop Position

(b) Sub Scanning Direction 2-Side

1. Call the Service Mode to the screen.
2. Touch [ADF] -> [Auto Stop Position Adjustment].
3. Touch [Sub Scanning Direction 2-Side].
4. Place the chart in the document feed tray (Set the chart with its blank side facing upward).
5. Press the Start key.

6. Make sure that result is OK. Then, touch [SET].
7. Touch [END].
8. Touch [Exit] on the Service Mode screen.
9. Turn OFF the main power switch, wait for 10 sec., then turn the switch ON.

NOTE

If the result is Unable:

- **Check and correct the skew of the document.**
- **Manually correct the value of [Original Stop Position].**
  I.11.20.1 Original Stop Position

(c) Main Scanning (Front)

1. Call the Service Mode to the screen.
2. Touch [ADF] -> [Auto Stop Position Adjustment].
3. Touch [Main Scanning (Front)].
4. Place the chart in the document feed tray (with the side having an arrow facing up).
5. Press the Start key.
6. Make sure that result is OK. Then, touch [SET].
7. Touch [END].
8. Touch [Exit] on the Service Mode screen.
9. Turn OFF the main power switch, wait for 10 sec., then turn the switch ON.

NOTE

If the result is Unable:

- **Check and correct the skew of the document.**
- **Manually correct the value of [Original Stop Position].**
  I.11.20.1 Original Stop Position

(d) Main Scanning (Back)

1. Call the Service Mode to the screen.
2. Touch [ADF] -> [Auto Stop Position Adjustment].
3. Touch [Main Scanning (Back)].
4. Place the chart in the document feed tray (Set the chart with its blank side facing upward.).
5. Press the Start key.
6. Make sure that result is OK. Then, touch [SET].
7. Touch [END].
8. Touch [Exit] on the Service Mode screen.
9. Turn OFF the main power switch, wait for 10 sec., then turn the switch ON.

NOTE

If the result is Unable:

- **Check and correct the skew of the document.**
- **Manually correct the value of [Original Stop Position].**
  I.11.20.1 Original Stop Position

11.20.4 Paper Passage

(1) Use

- To check for paper passage through the DF in each of the DF modes.
- Used for checking the document path for any abnormal condition when a document misfeed occurs.

(2) Procedure

1. Call the Service Mode to the screen.
2. Touch [ADF] -> [Paper Passage].
3. Select a paper passage mode to be tested from [1-Sided No Detect], [1-Sided Mixed Org.] or [2-Sided].
4. Set the original in the feed tray.
5. The Start key changes from orange to blue.
6. Press the Start key. The operation starts.

NOTE

- **After starting the operation by pressing the Start key, if the Start key is pressed during the operation, the operation will be suspended.**
  Then, if the Start key is pressed again during the suspension, the operation will be resumed.
- **If the Stop key is pressed during the test operation, the test will be forced to end.**
- **If there is no Original set in the feed tray, the Start key will not work.**
- **All Originals set in the feed tray are passed through. Upon the completion of all Originals passed through, the paper through test ends.**

11.20.5 Sensor Check

(1) Use

- To check sensors on the paper path.
- When a document misfeed occurs.

(2) Procedure

1. Call the Service Mode to the screen.
2. Touch [ADF] -> [Sensor Check].
3. Operate the sensor to check by using paper or the like, and check the screen display.

(Paper detected: 1, No paper detected: 0)

(3) Sensor check screen

- This is only typical screen which may be different from what are shown on each individual main body.

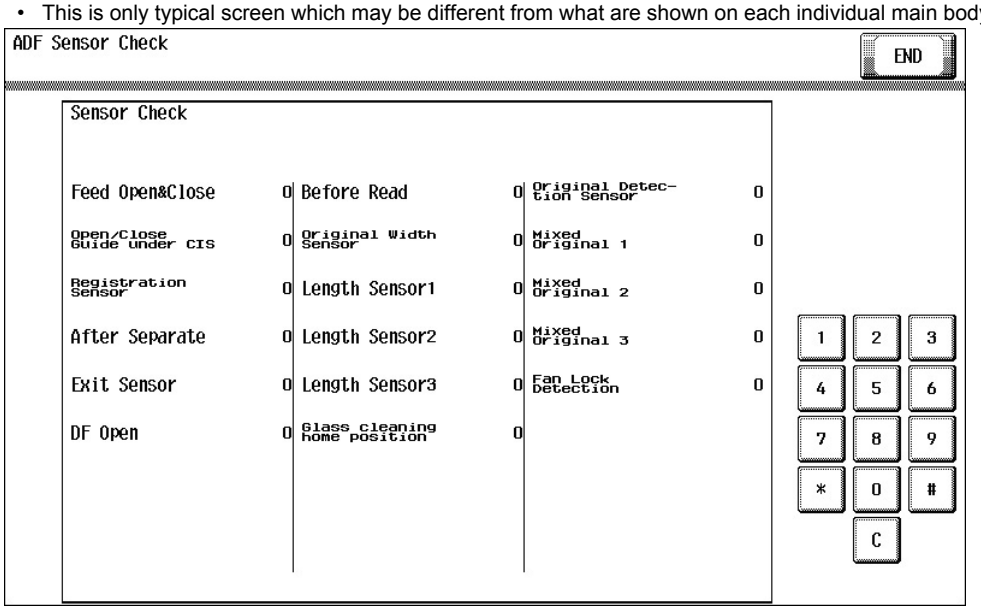

(4) Sensor check list

Symbol (DF-701/ DF-624)	Panel display	Part/signal name	Operation characteristics/panel display	
			1	0
PS14/PS13	Feed Open&Close	Upper door sensor	Open	Close
PS15/ -	Open/Close Guide under CIS	CIS cover sensor *1	Open	Close
PS3/PS3	Registration Sensor	Registration sensor	Paper present	Paper not present
PS2/PS2	After Separate	After separate sensor	Paper present	Paper not present
PS5/PS5	Exit Sensor	Document exit sensor	Paper present	Paper not present
RS201	DF Open	Original cover sensor	Open	Close
PS6/PS4	Before Read	Document reading sensor	Paper present	Paper not present
VR1/VR1	Original Width Sensor	Document width sensor	Analog value	
PS8/PS6	Length Sensor1	Document length sensor/1	Paper present	Paper not present
PS9/PS7	Length Sensor2	Document length sensor/2	Blocked	Unblocked
-	Length Sensor3	-	-	-
PS13/PS12	Glass cleaning home position	Document reading glass cleaning sensor	At home	Not at home
PS1/PS1	Original Detection Sensor	Document empty sensor	Paper present	Paper not present
PS10/PS8	Mixed Original 1	Mixed Original sensor/1	Paper present	Paper not present
PS11/PS9	Mixed Original 2	Mixed Original sensor/2	Paper present	Paper not present
PS12/PS10	Mixed Original 3	Mixed Original sensor/3	Paper present	Paper not present
FM1/FM1	Fan Lock Detection	DF cooling fan motor	Locked	Not locked

- *1: DF-701 only

11.20.6 Original Tray Width

(1) Use

- To set the values of maximum (A3 position) and minimum (B6 position) widths on the restriction plate positional volume.
- When an original misfeed occurs.
- When an original size detection error occurs.
- When the DF control board has been replaced.
- When the document width sensor has been replaced.

(2) Procedure

1. Call the Service Mode to the screen.
2. Touch [ADF] -> [Original Tray Width].

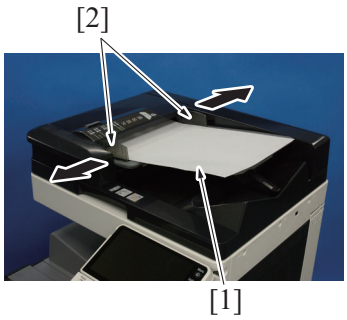

3. Set the A3 paper [1] on the original feed tray, and widen the width across the edge guides [2] by sliding them to the “A3” position.

4. Touch [Max. Width].
5. Press the Start key.
6. OK is displayed when the adjustment has been completed.

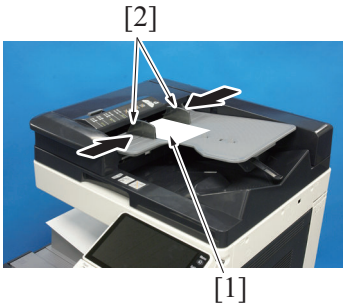

7. Set the B6 paper [1] on the original feed tray, and narrow the width across the edge guides [1] by sliding them to the “B6” position.

8. Touch [Min. Width].
9. Press the Start key.
10. OK is displayed when the adjustment has been completed.
11. Touch [END].
12. Touch [Exit] on the Service Mode screen.
13. Turn OFF the main power switch, wait for 10 sec., then turn the switch ON.

NOTE
If the result is NG:
- **Possible causes includes failure or wrong wiring of the document width sensor and failure of the DFCB.**

11.20.7 Read Pos Adj

(1) Use

- To adjust the original read position.
- When the LED exposure unit has been replaced.

(2) Procedure

(a) Auto Adjust

1. Call the Service Mode to the screen.
2. Touch [ADF] -> [Read Pos Adj].
3. Touch [Auto Adjust].

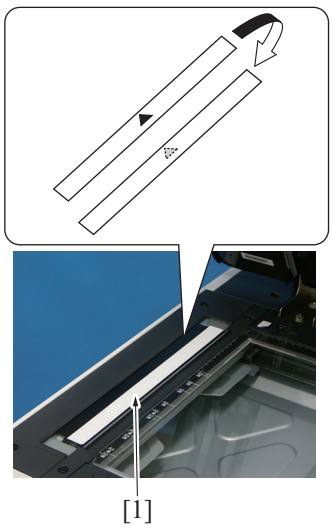

4. Open the DF.
5. Place the DF reading chart [1] so that a triangular mark may become the original glass side (downward) and the pointed tip of the triangle points toward the black sheet on the left side.
6. Press the Start key.
   NOTE
   - **Be sure that the DF reading chart is in position.**
   - **Keep the automatic document feeder open while making the adjustment.**
   - **When the edge deviation at DF reading after carrying out this adjustment becomes larger, conduct the “I.11.20.1 Original Stop Position”.**

7. Make sure that the result is OK.
8. Touch [END].

9. Touch [Exit] on the Service Mode screen.
10. Turn OFF the main power switch, wait for 10 sec., then turn the switch ON.

NOTE

If the result is Unable:

- **Check that the chart is in the correct place.**
- **Make the adjustment on the [Original Stop Position] screen.**
  I.11.20.1 Original Stop Position

(b) Read Pos Adj

- Not used.

11.20.8 Feed Zoom

(1) Use

- To adjust the feed zoom in the front side feeding direction on the DF.
- When DF has been replaced.

(2) Procedure

(a) Auto Adjust

1. Call the Service Mode to the screen.
2. Touch [ADF] -> [Feed Zoom].
3. Touch [Auto Adjust].
4. Place the chart in the document feed tray (with the side having an arrow facing up).
5. Press the Start key.
6. Make sure that result is OK. Then, touch [SET].
7. Touch [END].
8. Touch [Exit] on the Service Mode screen.
9. Turn OFF the main power switch, wait for 10 sec., then turn the switch ON.

(b) Orig. Feed Zoom Ad

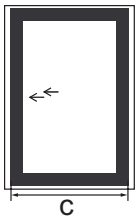

- The difference in the widths of C between the chart and the copy sample should fall within the following target.

Target	0 ± 1.0 mm
Setting range	-2.00% to +2.00% (1 step: 0.1%)

1. Place the chart in the document feed tray (with the side having an arrow facing up).
2. Make a full size copy of the chart.
3. C width on the chart and one on the copy sample are measured and adjusted so that the difference of C width satisfies the target shown below.
4. Call the Service Mode to the screen.
5. Touch [ADF] -> [Feed Zoom].
6. Touch [Orig. Feed Zoom Ad].
7. Enter the value using the [+] / [-] keys.
   - If the difference in the widths of C is greater than the target, enter the - value.
   - If the difference in the widths of C is smaller than the target, enter the + value.
8. Touch [Test Copy].
9. Select the tray loading paper for the test copy.
10. Touch [2].
11. Touch [1-sided -> 1-sided].
12. Place the chart in the document feeding tray. (with the side having an arrow facing up).
13. Press the start key, and check the difference in the width C between the chart and the discharged copy sample.
14. Touch [END] twice.
15. Touch [Exit] on the Service Mode screen.
16. Turn OFF the main power switch, wait for 10 sec., then turn the switch ON.

11.20.9 Scanning Light Adjustment

(1) Use

- To adjust the scanning light of DF.
- Used for adjusting the difference in the scanning lights between scanning from the original glass and scanning from the DF original glass.

(2) Procedure

1. Call the Service Mode to the screen.
2. Touch [ADF] -> [Scanning Light Adjustment].
3. Select a color by pressing [Red], [Green], or [Blue].
4. Press the value using the [+] / [-] key.

NOTE
- **It is recommended that the scanning light adjustment should be made by the same steps for all the three colors of red, green, and blue.**

5. Touch [END].
6. Touch [Exit] on the Service Mode screen.
7. Turn OFF the main power switch, wait for 10 sec., then turn the switch ON.

(3) Setting range
- -4 to + 4 (1 step)

11.20.10 Mixed original size adjustment
(1) Use
- To adjust paper length detection accuracy used during paper feed in DF mixed original mode.
- To set the threshold for each size detection based on the length detected when feeding standard sizes (A4S).
- When the DF control board has been replaced.

(2) Procedure
NOTE
- **Before performing this adjustment, the feed zoom adjustment needs to be complete.**
  I.11.20.8 Feed Zoom

1. Call the Service Mode to the screen.
2. Touch [ADF] -> [Mixed original Size adjustment].
3. Place the chart in the document feed tray (with the side having an arrow facing up).
4. Press the Start key.
5. Make sure that result is OK. Then, touch [SET].
6. Touch [END].
7. Touch [Exit] on the Service Mode screen.
8. Turn OFF the main power switch, wait for 10 sec., then turn the switch ON.

11.20.11 Home Read Position Adjust
(1) Use
- When image failure occurs due to the dirty back side shading shaft on the DF, use this function to adjust the home position of the shading shaft and to change a shading reference plate.

(2) Procedure
1. Call the Service Mode to the screen.
2. Touch [ADF] -> [Home Read Position Adjust].
3. Press the value using the [+] / [-] key.
4. Touch [END].
5. Touch [Exit] on the Service Mode screen.
6. Turn OFF the main power switch, wait for 10 sec., then turn the switch ON.

(3) Default setting
- 0

(4) Setting range
- -4 to + 4 (1 step)

11.20.12 FD-Mag. Adj. (B)
(1) Use
- To adjust the feed zoom in the back side feeding direction on the DF.
- When DF and CIS has been replaced.

(2) Procedure
(a) Auto Adjust
1. Call the Service Mode to the screen.
2. Touch [ADF] -> [FD-Mag. Adj. (B)].
3. Touch [Auto Adjust].
4. Place the chart in the document feed tray (Set the chart with its blank side facing upward).
5. Press the Start key.
6. Make sure that result is OK. Then, touch [SET].
7. Touch [END].
8. Touch [Exit] on the Service Mode screen.
9. Turn OFF the main power switch, wait for 10 sec., then turn the switch ON.

(b) Orig. Feed Zoom Ad

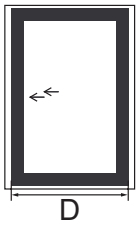

- The difference in the widths of D between the chart and the copy sample should fall within the following target.

Target	0 ± 1.0 mm
Setting range	-2.00% to +2.00% (1 step: 0.1%)

1. Place the chart in the document feed tray (Set the chart with its blank side facing upward).
2. Make a full size copy of the chart.
3. D width on the chart and one on the copy sample are measured and adjusted so that the difference of D width satisfies the target shown below.
4. Call the Service Mode to the screen.
5. Touch [ADF] -> [FD-Mag. Adj. (B)].
6. Touch [Orig. Feed Zoom Ad].
7. Enter the value using the [+] / [-] keys.
   - If the difference in the widths of D is greater than the target, enter the - value.
   - If the difference in the widths of D is smaller than the target, enter the + value.
8. Touch [Test Copy].
9. Select the tray loading paper for the test copy.
10. Touch [2].
11. Touch [2-sided -> 2-sided].
12. Place the chart in the document feeding tray. (Make sure that the blank surface of the chart faces up.)
13. Press the start key, and check the difference in the width D between the chart and the discharged copy sample.
14. Touch [END] twice.
15. Touch [Exit] on the Service Mode screen.
16. Turn OFF the main power switch, wait for 10 sec., then turn the switch ON.

11.20.13 Main Scanning Direction Zoom

(1) Use

- To adjust the feed zoom in the back side main scanning direction on the DF.
- When DF and CIS has been replaced.

(2) Procedure

(a) Auto Adjust

1. Call the Service Mode to the screen.
2. Touch [ADF] -> [Main Scanning Direction Zoom].
3. Touch [Auto Adjust].
4. Place the chart in the document feed tray (Set the chart with its blank side facing upward).
5. Press the Start key.
6. Make sure that result is OK. Then, touch [SET].
7. Touch [END].
8. Touch [Exit] on the Service Mode screen.
9. Turn OFF the main power switch, wait for 10 sec., then turn the switch ON.

(b) Main scanning direction zoom adj

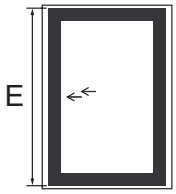

- The difference in the widths of E between the chart and the copy sample should fall within the following target.

Target	0 ± 1.4 mm
Setting range	-1.00% to +1.00% (1 step: 0.1%)

1. Place the chart in the document feed tray (Set the chart with its blank side facing upward).
2. Make a full size copy of the chart.
3. E width on the chart and one on the copy sample are measured and adjusted so that the difference of E width satisfies the target shown below.
4. Call the Service Mode to the screen.
5. Touch [ADF] -> [Main Scanning Direction Zoom].
6. Touch [Main scanning direction zoom adj].
7. Enter the value using the [+] / [-] keys.
   - If the difference in the widths of E is greater than the target, enter the - value.
   - If the difference in the widths of E is smaller than the target, enter the + value.

8. Touch [Test Copy].
9. Select the tray loading paper for the test copy.
10. Touch [2].
11. Touch [2-sided -> 2-sided].
12. Place the chart in the document feeding tray. (Make sure that the blank surface of the chart faces up.)
13. Press the start key, and check the difference in the width E between the chart and the discharged copy sample.
14. Touch [END] twice.
15. Touch [Exit] on the Service Mode screen.
16. Turn OFF the main power switch, wait for 10 sec., then turn the switch ON.

11.21 FAX setting (Line1)

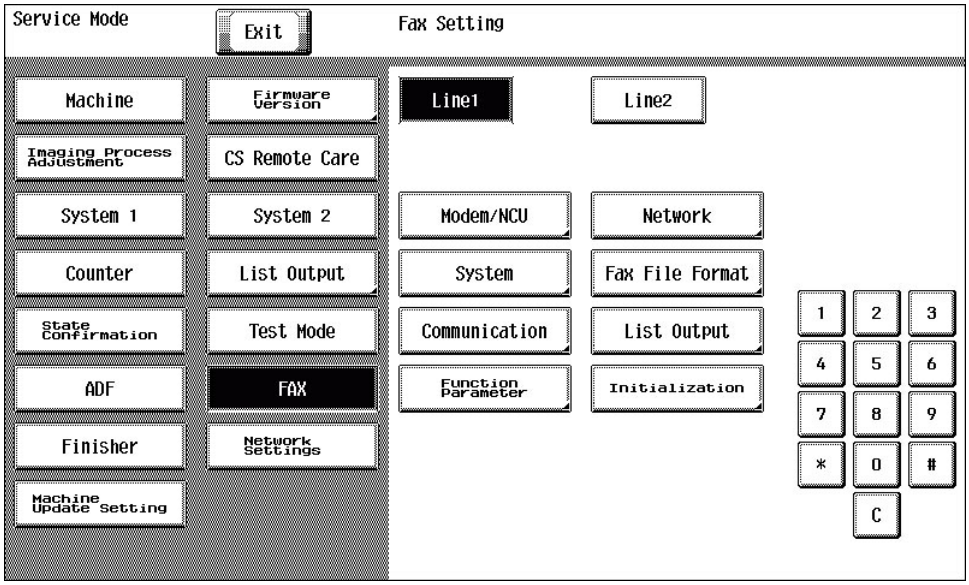

- *1: It will be displayed only when the following setting shows that FAX (circuit 1) is set to “Set”.
  [Service Mode] -> [System 2] -> [Option Board Status]

11.21.1 Modem/NCU

(1) V34:1/2 : RX Max. Bit Speed

(a) Use

- To set the max. bit speed for reception in V.34.

(b) Default setting

- 33600 bps

(c) Setting range

- 2400 to “33600 bps” (step: 2400 bps)

(2) V34:1/2 : TX Max. Bit Speed

(a) Use

- To set the max. bit speed for transmission in V.34.

(b) Default setting

- 33600 bps

(c) Setting range

- 2400 to “33600 bps” (step: 2400 bps)

(3) V34:1/2 : Control CH Speed

(a) Use

- A bit speed of the control channel.
- The negotiation of 2400/1200 is performed in the V.34 start-up procedure.

(b) Default setting

- 1200 bps

(c) Setting item

- “1200 bps”
- 2400 bps

(4) V34:1/2 : Max. SYMB Speed

(a) Use

- Maximum modulation speed (baud rate) of V.34
  - 3429 SYMB: 3429 33.6 k to 4.8 k
  - 3200 SYMB: 3200 31.2 k to 2.4 k
  - 3000 SYMB: 3000 28.8 k to 2.4 k
  - 2800 SYMB: 2800
  - 2400 SYMB: 2400
- The modulation speed of both sending and receiving change by change of setting.
- The upper limit value of V.34 maximum bit speed is determined.
- Normally you do not need to change the value. In case that a V.34 error frequently occurs, you can attempt to set up 3000 SYMB and decrease the symbol rate, for instance.

(b) Default setting

- 3429 SYMB

(c) Setting item

- 2400 SYMB
- 2800 SYMB
- 3000 SYMB
- 3200 SYMB
- “3429 SYMB”

(5) V34:2/2 : SYMB Select Criterion (S/N)

(a) Use

- To set the SYMB Select Criterion (S/N).
- S/N is measured by sending and receiving line conditioning signal (L1/L2) in the Phase 2. Its result determines the SYMB speed (modulation speed).

(b) Default setting

- 0 dB

(c) Setting range

- -6 to 6 dB (step: 1 dB)

NOTICE
It becomes easy to select a high SYMB by using “- direction”.

(6) V34:2/2 : SYMB Select Criterion (Distortion)

(a) Use

- To set the SYMB Select Criterion (Distortion).
- S/N is measured by sending and receiving line conditioning signal (L1/L2) in the Phase 2. Its result determines the SYMB speed (modulation speed).

(b) Default setting

- 0 dB

(c) Setting range

- -6 to 6 dB (step: 1 dB)

NOTICE
It becomes easy to select a high SYMB by using “+ direction”.

(7) V34:2/2 : Main CH Speed Selection Standard

(a) Use

- The bit speeds of V.34 are determined by the Phase 3 (training).
- This functional parameter sets thresholds for the bit speed determination.

(b) Default setting

- 0 dB

(c) Setting range

- -8 to 7 dB (step: 1 dB)

NOTICE
It becomes easy to select a high speed by using “- direction”.

(8) V17 Send Max Speed: TX Max. Speed

(a) Use

- To set the max. speed for transmission.

(b) Default setting

- V17-14400bps

(c) Setting item

- "V17-14400bps"
- V17-12000bps
- V17-9600bps
- V17-7200bps
- V29-9600bps
- V29-7200bps
- V27-4800bps
- V27-2400bps

(9) V17 Send Max Speed: RX Max. Speed

(a) Use

- To set the max. speed for reception.

(b) Default setting

- V17-14400bps

(c) Setting item

- "V17-14400bps"
- V29-9600bps
- V27-4800bps

(10) TxATT: PIX TxATT

(a) Use

- To set the output level of PIX TxATT.
- Directly sets modem. There are no external attenuator.

(b) Procedure

- The setting value are different depending on the country.

(11) TxATT: TONE/Procedure Signal TxATT

(a) Use

- To set the output level of TONE/Procedure Signal TxATT.
- Directly sets modem. There are no external attenuator.

(b) Procedure

- The setting value are different depending on the country.

(12) TxATT: CED/ANSam TxATT

(a) Use

- To set the output level of CED/ANSam TxATT.
- Directly sets modem. There are no external attenuator.

(b) Procedure

- The setting value are different depending on the country.

(13) TxATT: DTMF TxATT

(a) Use

- To set the output level of DTMF TxATT.
- Directly sets modem. There are no external attenuator.

(b) Procedure

- The setting value are different depending on the country.

(14) Level: CD/SED ON Level

(a) Use

- To set reception signal sensitivity level.
- SED is not used.

(b) Default setting

- -48 dBm

(c) Setting rage

- "-48" to -33 dBm (step: 5 dBm)

(15) Level: DTMF H-L Level Difference

(a) Use

- To set DTMF H-L level difference.

(b) Default setting

- 2.0 dB

(c) Setting range

- 1.0 to 4.0 dB (step: 0.5 dB)

(16) Cable EQL: TX

(a) Use

- Frequency response of the cable attenuation equalizer.

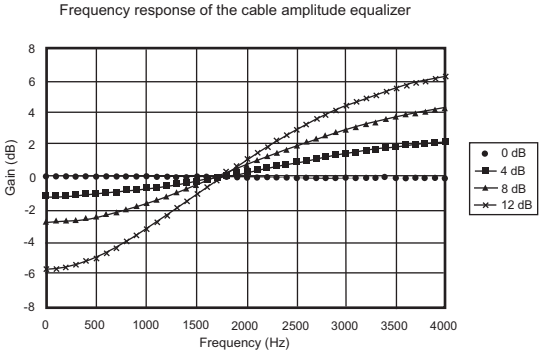

(b) Default setting

- 0 dB

(c) Setting range

- "0" to 12 dB (step: 4 dB)

(17) Cable EQL: RX

(a) Use

- Frequency response of the cable attenuation equalizer.

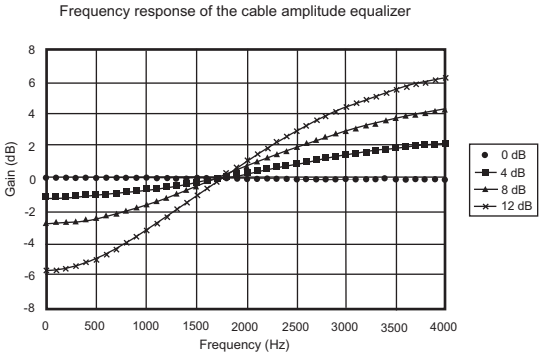

(b) Default setting

- 0 dB

(c) Setting range

- "0" to 12 dB (step: 4 dB)

11.21.2 Network

(1) Network Setting 1: Receive Signal Detection Mode

(a) Use

- To set whether to detect the receive signal by the number of times or by time.
- Sets to "Time" when ringer can not be detected by the number.

(b) Default setting

- No. of Times

(c) Setting item

- "No. of Times"
- Time

(2) Network Setting 1: BUSY TONE Detection

(a) Use

- To set whether to use the Busy Tone detection or not.

(b) Default setting

- OFF

(c) Setting item

- ON
- "OFF"

(3) Network Setting 1: No. of Times of Busy Tone Detection

(a) Use

- To set the number of times of Busy Tone detection.

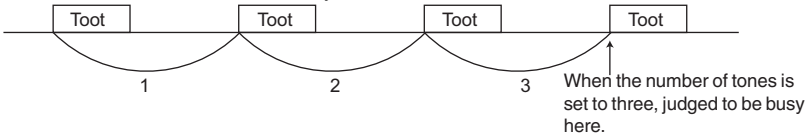

(b) Default setting

- 0

(c) Setting range

- "0" to 15 count (step: 1 count)

(4) Network Setting 2: 1300 Hz Detection

(a) Use

- To set whether to use the 1300 Hz detection or not.
- Set this function to "ON" if the facsimile network (F-net) is to be used.

(b) Default setting

- OFF

(c) Setting item

- ON
- "OFF"

(5) Network Setting 2: Dial Tone Detection

(a) Use

- To set whether to use the Dial Tone detection or not.

(b) Default setting

- ON

(c) Setting item

- "ON"
- OFF

(6) Network Setting 2: DC-LOOP Check

(a) Use

- Checks the DC loop current before dialing.
- When the current is zero, an error occurs. (T.80)
- You can change the setting to be compliant to standards in other countries. In Japan, set this parameter to OFF.

(b) Default setting

- OFF

(c) Setting item

- ON
- "OFF"

(7) Network Setting 2: min. RING OFF Time

(a) Use

- Minimum time to recognize ringer interval.

For country spec.

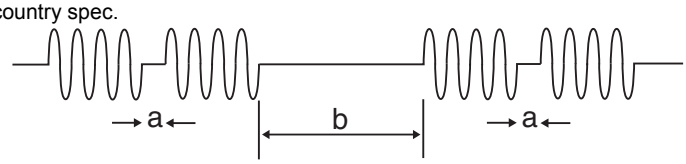

a	To avoid judging "a" as a ring-off time.	b	Ring-off time

(b) Default setting

- 0 ms

(c) Setting range

- "0" to 1000 ms (step: 100 ms)

(8) Network Setting 2: Response Waiting Time

(a) Use

- To set the response waiting time.

(b) Default setting

- 55 s

(c) Setting range

- 35 to 115 sec (step: 5 s)

(9) Network Setting 2: Pause Time

(a) Use

- The pause time for one pause key (pause between digits)

(b) Default setting

- 1 s

(c) Setting range

- "1" to 7 sec (step: 1 s)

11.21.3 System

(1) Display Setting: Closed area Rx

(a) Use

- To set whether or not to use the menu display for closed reception by using F-code for junk fax messages.

(b) Default setting

- ON

(c) Setting item

- "ON"
- OFF

(2) Display Setting: Re-Transmission

(a) Use

- To set whether to use the re-transmission function or not.

(b) Default setting

- ON

(c) Setting item

- "ON"
- OFF

(3) Display Setting: Compulsory Memory RX

(a) Use

- To set whether to use the compulsory memory reception function or not.

(b) Default setting

- ON

(c) Setting item

- "ON"
- OFF

NOTE

- **When turned "ON", the function permits selection of ON or OFF setting for the compulsory memory reception function that allows a document when received not to be printed automatically and, instead, to be printed through manual operation.**

(4) Display Setting: Reject Calls

(a) Use

- To set whether to use the reject calls function or not.

(b) Default setting

- OFF

(c) Setting item

- ON
- "OFF"

NOTE

- **Menu display for the Reject Calls function. When turned "ON", the function displays the function that allows the user to set a remote machine to be rejected as a reject call number.**

(5) Display Setting: Relay

(a) Use

- To set whether to use the relay function or not.

(b) Default setting

- ON

(c) Setting item

- "ON"
- OFF

(6) Scan Setting: Frame Erasure HP

(a) Use

- To set the frame erasure size during reading.
- The four edges of the original are erased by the same width.

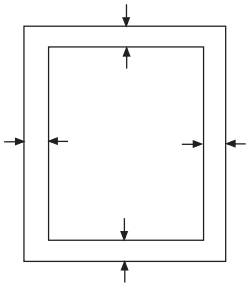

- Erases the outer lines to prevent black lines from appearing. Effective in the book transmission.

(b) Default setting

- 10 mm

(c) Setting item

- 5 mm
- "10 mm"
- 15 mm

(7) System Function: Fax Board Watchdog

(a) Use

- To set whether to enable watchdog by the fax board CPU or not.

ON	Reset when hung up.

OFF	Keeps being hung up.

(b) Default setting

- ON

(c) Setting item

- "ON"
- OFF

(8) System Function: Fax BOOT Rewrite on ISW

(a) Use

- Required when a BOOT BLOCK program is upgraded or a hardware is changed.

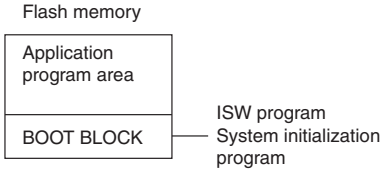

(b) Default setting

- OFF

(c) Setting item

- ON
- "OFF"

(9) System Function: Error Code Display Time

(a) Use

- To set the communication error code display time.

(b) Default setting

- 20 s

(c) Setting item

- 10 to 250 s (step: 10 s)
- HOLD

(10) Communication Setting: Auto Rotation Send (LT)

(a) Use

- To set whether to rotate the Letter size original automatically or not for transmission.

ON	Transmits in the A4 width.
OFF	Transmits in the A3 width.

(b) Default setting

- ON

(c) Setting item

- "ON"
- OFF

(11) Communication Setting: Auto Rotation Send (A4T)

(a) Use

- To set whether to rotate the A4 size original automatically or not for transmission.

ON	Transmits in the A4 width.
OFF	Transmits in the A3 width.

(b) Default setting

- ON

(c) Setting item

- "ON"
- OFF

(12) Communication Setting: Error Page Resending

(a) Use

- To set whether to retransmit, after a communication error occurs, the document starting with the error page or all pages.

Error Page	Retransmit the document starting with the error page
All Page	Retransmit the document all pages

(b) Default setting

- Error Page

(c) Setting item

- "Error Page"
- All Page

(13) Communication Setting: Number of Redials (Error Page)

(a) Use

- To set the number of redials for the error page.
- Counted as a busy redial when the error page redial is busy.

(b) Default setting

- The default setting is different depending on the country.

(c) Setting range

- 0 to 7 (step: 1)

11.21.4 Fax File Format

The following data can be initialized.

- All of the scan/fax documents stored in the box are erased.
- All of the boxes produced automatically by the F code are erased.
  Supplement: For the formats of the Fax Function Parameter and the Communication Journal, see I.11.21.8 Initialization

(1) Procedure

1. Call the Service Mode to the screen.
2. Touch [FAX].
3. Touch [Fax File Format].
4. Press the Start key.
5. The Fax File Format is executed.

11.21.5 Communication

(1) Protocol: V8 / V34 Protocol

(a) Use

- To set whether to use the V.8/V.34 protocol or not.

(b) Default setting

- ON

(c) Setting item

- "ON"
- OFF

(2) Protocol: V17 EP TONE

(a) Use

- Whether the EP tone (Echo Protect: 2100Hz) is added to the top of the training signal.

(b) Default setting

- ON

(c) Setting item

- "ON"
- OFF

(3) Protocol: V29 EP TONE

(a) Use

- Whether the EP tone (Echo Protect: 2100Hz) is added to the top of the training signal.

(b) Default setting

- OFF

(c) Setting item

- ON
- “OFF”

(4) Protocol: V17 Selection Mode “-”

(a) Use

- V.34 is not used when a dash (-) is added at the top of dial number.

(b) Default setting

- OFF

(c) Setting item

- ON
- “OFF”

(5) Protocol: ANSam Send Time

(a) Use

- To set the transmission time for the V.8 protocol signal ANSam.

(b) Default setting

- 4.0 s

(c) Setting range

- 1.0 to 5.5 s (step: 0.5 s)

(6) Int’l Comm. Function: Foreign Communication Function

(a) Use

- To set whether or not to use the mode that employs the number of DIS waiting times.

(b) Default setting

- ON

(c) Setting item

- “ON”
- OFF

(7) Int’l Comm. Function: No. of DIS Waiting Times at Foreign Communication

(a) Use

- To set the number of DIS waiting times.

(b) Default setting

- 1

(c) Setting item

- “1”
- 2

(8) Int’l Comm. Function: V34 Speed

(a) Use

- To set the V.34 international communication mode speed.

(b) Default setting

- 28800 bps

(c) Setting range

- 16800 to 33600 bps (step: 2400 bps)

(9) Int’l Comm. Function: V17 Speed

(a) Use

- To set the V.17 international communication mode speed.

(b) Default setting

- 7200 bps

(c) Setting range

- "7200" to 14400 bps (step: 2400 bps)

(10) Int'l Comm. Function: V29 Speed

(a) Use

- To set the V.29 international communication mode speed.

(b) Default setting

- 4800 bps

(c) Setting range

- 2400 to 9600 bps (step: 2400 bps)

(11) TIMER 1: T1

(a) Use

T1 timer (T.30 standard)	Calling	Designate by the response waiting timer
	Called	Starts after DIS is output. The waiting time until DCS is received.
Response waiting timer (55sec)	Calling	Starts after dialing. Until CED is received.

(b) Default setting

- 35 s

(c) Setting range

- 30 to 90 s (step: 5 s)

(12) TIMER 1: DCS-TCF DELAY

(a) Use

- To set the delay time between DCS and TCF.

(b) Default setting

- 80 ms

(c) Setting range

- 50 to 150 ms (step: 10 ms)

(13) TIMER 1: CED-DIS DELAY

(a) Use

- To set the delay time between CED and DIS.

(b) Default setting

- 80 ms

(c) Setting range

- 50 to 150 ms (step: 10 ms)

(14) TIMER 1: PIX-PMC DELAY

(a) Use

- To set the delay time between PIX and PMC.

(b) Default setting

- 80 ms

(c) Setting range

- 50 to 150 ms (step: 10 ms)

(15) TIMER 2: EOL-EOL

(a) Use

- To set the transmission time between EOLs.



(b) Default setting

- 13.0 s

(c) Setting range

- 4.0 to 25.5 s (step: 0.5 s)

(16) TIMER 2: CFR-PIXWAIT

(a) Use

- Sets the waiting time from CFR is sent to the image signals are received.
- Radio fax on boats occasionally requires more than 6 sec.

(b) Default setting

- 6.0 s

(c) Setting range

- “6.0” to 25.5 s (step: 0.5 s)

(17) TIMER 2: EOM-PIXWAIT

(a) Use

- Waiting time to receive PIX before sending DIS when EOM is used.
- Some fax machines sends PIX without returning to Phase B in spite of EDM.

(b) Default setting

- 5.5 s

(c) Setting range

- “5.5” to 25.5 s (step: 0.5 s)

(18) TIMER 2: JM WAIT

(a) Use

- Time to continue outputting CM until receiving JM.

(b) Default setting

- 9.0 s

(c) Setting range

- 6.0 to 25.5 s (step: 0.5 s)

(19) Others: ECM Function

(a) Use

- Set whether or not to cancel reception ECM (error correction mode).

(b) Default setting

- ON

(c) Setting item

- “ON”
- OFF

(20) Others: Frame Size at ECM TX

(a) Use

- To set the frame size at ECM transmission.

(b) Default setting

- 256

(c) Setting item

- 64
- “256”

(21) Others: Coding Ability

(a) Use

- To set the coding ability.
- Effective to both sending and reception.

(b) Default setting

- MH/MR/MMR/JBIG

(c) Setting item

- MH
- MH/MR
- MH/MR/MMR
- “MH/MR/MMR/JBIG”

11.21.6 List Output

(1) Report Addition Information

(a) Use

- To set whether or not to add the diagnosis code or dial number to the communication journal.

Diagnosis Code	The diagnosis code is printed on the communication journal.
Dial Number	The dial number is printed on the communication journal.

(b) Default setting

- OFF

(c) Setting item

- Diagnosis Code
- Dial Number
- “OFF”

(2) TX Result Report

(a) Use

- To set whether or not to add image to the transmission result report.
- Even if set to "With image" images are not attached at the time of the quick memory transmission and the manual transmission.

(b) Default setting

- With image

(c) Setting item

- “With image”
- Without image

(3) Protocol Trace Auto Output

(a) Use

- To set the timing for the protocol trace auto output.

(b) Default setting

- OFF

(c) Setting item

- Always
- Error
- “OFF”

11.21.7 Function Parameter

(1) Use

- Function parameters can be set through addressing.

(2) Procedure

1. Call the Service Mode to the screen.
2. Touch [FAX].
3. Touch [Function Parameter].
4. Select the address and then, enter the address using [A] to [F] or keypad.
   * A Cursor is movable if ◀ or ▶ is pushed.
5. Next, select the data and enter a value using binary numbers with keypad.
6. When the address and the value are correct, touch [Apply].

7. After the settings have been completed, touch [END].

(3) Address parameter list

NOTE

- **When changing a value in this address parameter list, be sure to comply with the phone line standards of other countries.**
- **Depending on values that have been changed, compliance with the phone line standards of other countries may not be obtained.**
  - **FAX setting (Address parameter list: for line 1, line 2, line 3 and line 4)**
  - **FAX setting (Address parameter list: for line 1)**
  - **FAX setting (Address parameter list: for line 2)**
  - **FAX setting (Address parameter list: for line 3)**
  - **FAX setting (Address parameter list: for line 4)**

11.21.8 Initialization

(1) Use

- The following data can be initialized. Select data you want to initialize and touch the [Yes].

Fax Function Parameter	The function set condition is initialized into the Factory Default condition.
Communication Journal Data	All of the Communication Journal is erased.

NOTICE

- For the formats of the Abbreviated Registration Data, the Program Registration Data, The Group Registration Data, and the F-code Box Data, see I.11.21.4 Fax File Format.

(2) Procedure

1. Call the Service Mode to the screen.
2. Touch [FAX].
3. Touch [Initialization].
4. Select data you want to initialize.
   Supplement: Two or more selections are possible for data.
5. Touch [Yes].
6. When a verification message is displayed, touch [Yes].
7. The data selected is initialized.

11.22 FAX setting (Line2, Line 3, Line 4)

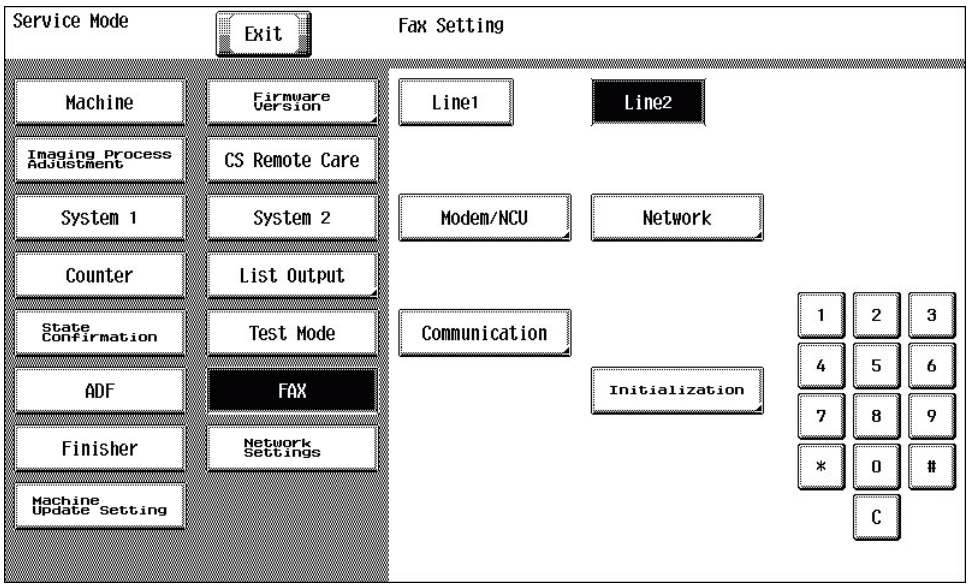

- *1: It will be displayed only when the following setting shows that FAX (circuit 2) is set to “Set”.
  [Service Mode] -> [System 2] -> [Option Board Status]

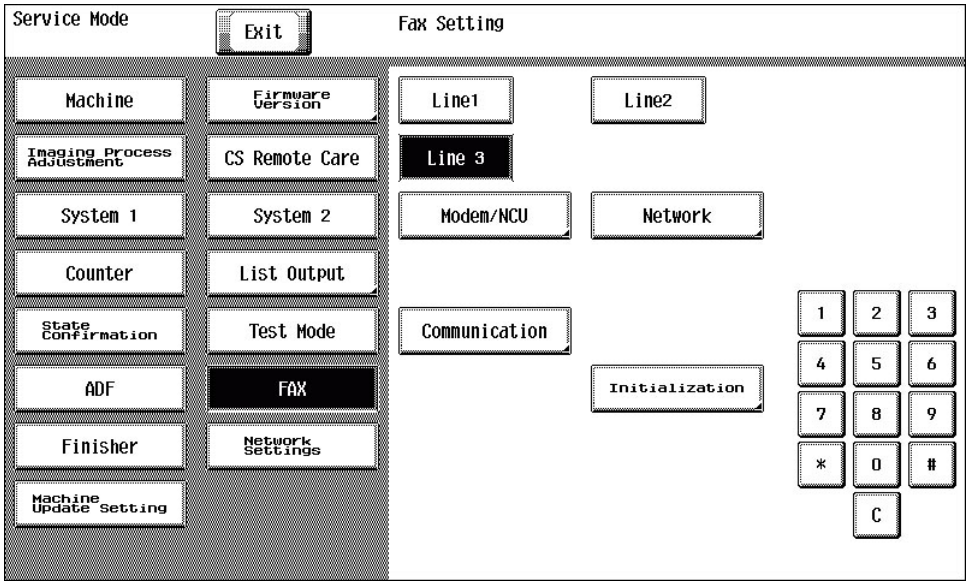

- *1: It will be displayed only when the following setting shows that FAX (circuit 3) is set to “Set”.
  [Service Mode] -> [System 2] -> [Option Board Status]

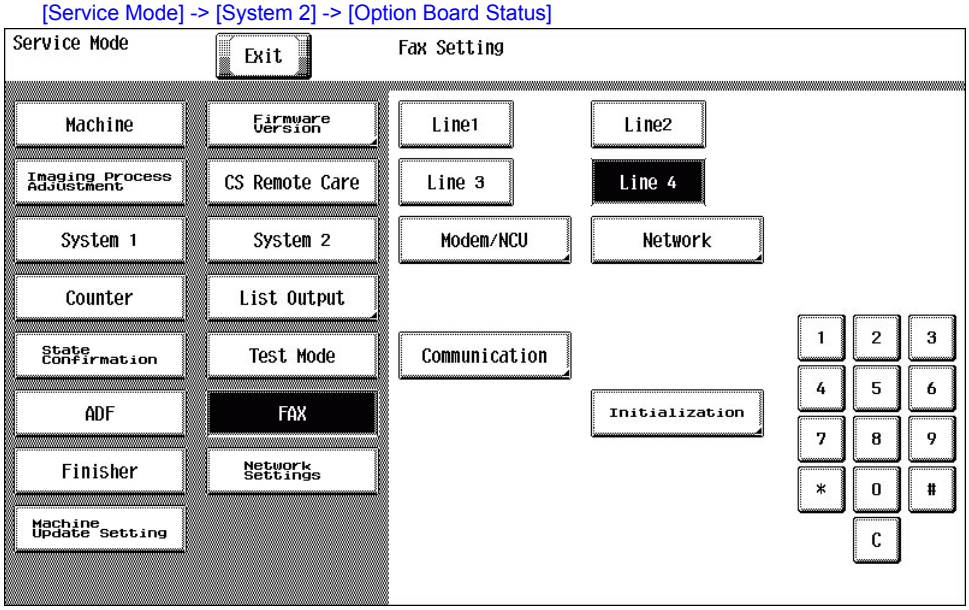

- *1: It will be displayed only when the following setting shows that FAX (circuit 4) is set to “Set”.
  [Service Mode] -> [System 2] -> [Option Board Status]

11.22.1 Modem/NCU

(1) V34:1/2 : RX Max. Bit Speed

(a) Use

- To set the max. bit speed for reception in V.34.

(b) Default setting

- 33600 bps

(c) Setting range

- 2400 to “33600 bps” (step: 2400 bps)

(2) V34:1/2 : TX Max. Bit Speed

(a) Use

- To set the max. bit speed for transmission in V.34.

(b) Default setting

- 33600 bps

(c) Setting range

- 2400 to “33600 bps” (step: 2400 bps)

(3) V34:1/2 : Control CH Speed

(a) Use

- A bit speed of the control channel.
- The negotiation of 2400/1200 is performed in the V.34 start-up procedure.

(b) Default setting

- 1200 bps

(c) Setting item

- “1200 bps”
- 2400 bps

(4) V34:1/2 : Max. SYMB Speed

(a) Use

- Maximum modulation speed (baud rate) of V.34
  - 3429 SYMB: 3429 33.6 k to 4.8 k
  - 3200 SYMB: 3200 31.2 k to 2.4 k
  - 3000 SYMB: 3000 28.8 k to 2.4 k
  - 2800 SYMB: 2800
  - 2400 SYMB: 2400
- The modulation speed of both sending and receiving change by change of setting.
- The upper limit value of V.34 maximum bit speed is determined.
- Normally you do not need to change the value. In case that a V.34 error frequently occurs, you can attempt to set up 3000 SYMB and decrease the symbol rate, for instance.

(b) Default setting

- 3429 SYMB

(c) Setting item

- 2400 SYMB
- 2800 SYMB
- 3000 SYMB
- 3200 SYMB
- “3429 SYMB”

(5) V34:2/2 : SYMB Select Criterion (S/N)

(a) Use

- To set the SYMB Select Criterion (S/N).
- S/N is measured by sending and receiving line conditioning signal (L1/L2) in the Phase 2. Its result determines the SYMB speed (modulation speed).

(b) Default setting

- 0 dB

(c) Setting range

- -6 to 6 dB (step: 1 dB)

NOTICE
It becomes easy to select a high SYMB by using “- direction”.

(6) V34:2/2 : SYMB Select Criterion (Distortion)

(a) Use

- To set the SYMB Select Criterion (Distortion).
- S/N is measured by sending and receiving line conditioning signal (L1/L2) in the Phase 2. Its result determines the SYMB speed (modulation speed).

(b) Default setting

- 0 dB

(c) Setting range

- -6 to 6 dB (step: 1 dB)

NOTICE
It becomes easy to select a high SYMB by using “+ direction”.

(7) V34:2/2 : Main CH Speed Selection Standard

(a) Use

- The bit speeds of V.34 are determined by the Phase 3 (training).
- This functional parameter sets thresholds for the bit speed determination.

(b) Default setting

- 0 dB

(c) Setting range

- -8 to 7 dB (step: 1 dB)

NOTICE
It becomes easy to select a high speed by using “- direction”.

(8) V17 Send Max Speed: TX Max. Speed

(a) Use

- To set the max. speed for transmission.

(b) Default setting

- V17-14400bps

(c) Setting item

- “V17-14400bps”
- V17-12000bps
- V17-9600bps
- V17-7200bps
- V29-9600bps
- V29-7200bps
- V27-4800bps
- V27-2400bps

(9) V17 Send Max Speed: RX Max. Speed

(a) Use

- To set the max. speed for reception.

(b) Default setting

- V17-14400bps

(c) Setting item

- “V17-14400bps”
- V29-9600bps
- V27-4800bps

(10) TxATT: PIX TxATT

(a) Use

- To set the output level of PIX TxATT.
- Directly sets modem. There are no external attenuator.

(b) Procedure

- The setting value are different depending on the country.

(11) TxATT: TONE/Procedure Signal TxATT

(a) Use

- To set the output level of TONE/Procedure Signal TxATT.
- Directly sets modem. There are no external attenuator.

(b) Procedure

- The setting value are different depending on the country.

(12) TxATT: CED/ANSam TxATT

(a) Use

- To set the output level of CED/ANSam TxATT.
- Directly sets modem. There are no external attenuator.

(b) Procedure

- The setting value are different depending on the country.

(13) TxATT: DTMF TxATT

(a) Use

- To set the output level of DTMF TxATT.
- Directly sets modem. There are no external attenuator.

(b) Procedure

- The setting value are different depending on the country.

(14) Level: CD/SED ON Level

(a) Use

- To set reception signal sensitivity level.
- SED is not used.

(b) Default setting

- -48 dBm

(c) Setting range

- "-48" to -33 dBm (step: 5 dBm)

(15) Level: DTMF H-L Level Difference

(a) Use

- To set DTMF H-L level difference.

(b) Default setting

- 2.0 dB

(c) Setting range

- 1.0 to 4.0 dB (step: 0.5 dB)

(16) Cable EQL: TX

(a) Use

- Frequency response of the cable attenuation equalizer.

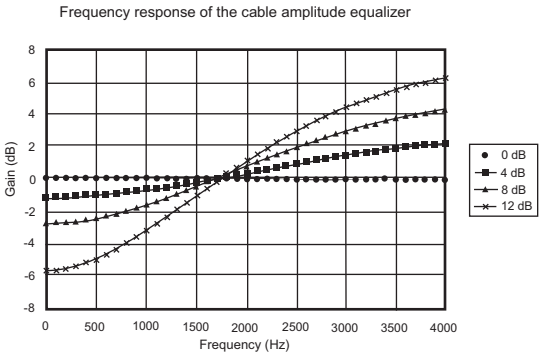

(b) Default setting

- 0 dB

(c) Setting range

- "0" to 12 dB (step: 4 dB)

(17) Cable EQL: RX

(a) Use

- Frequency response of the cable attenuation equalizer.

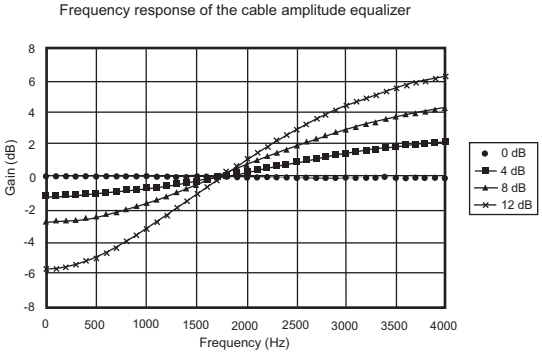

(b) Default setting

- 0 dB

(c) Setting range
- "0" to 12 dB (step: 4 dB)

11.22.2 Network

(1) Network Setting 1: Receive Signal Detection Mode

(a) Use
- To set whether to detect the receive signal by the number of times or by time.
- Sets to "Time" when ringer can not be detected by the number.

(b) Default setting
- No. of Times

(c) Setting item
- "No. of Times"
- Time

(2) Network Setting 1: BUSY TONE Detection

(a) Use
- To set whether to use the Busy Tone detection or not.

(b) Default setting
- OFF

(c) Setting item
- ON
- "OFF"

(3) Network Setting 1: No. of Times of Busy Tone Detection

(a) Use
- To set the number of times of Busy Tone detection.

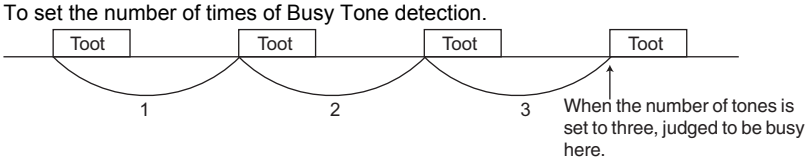

(b) Default setting
- 0

(c) Setting range
- "0" to 15 count (step: 1 count)

(4) Network Setting 2: 1300 Hz Detection

(a) Use
- To set whether to use the 1300 Hz detection or not.
- Set this function to "ON" if the facsimile network (F-net) is to be used.

(b) Default setting
- OFF

(c) Setting item
- ON
- "OFF"

(5) Network Setting 2: Dial Tone Detection

(a) Use
- To set whether to use the Dial Tone detection or not.

(b) Default setting
- ON

(c) Setting item
- "ON"
- OFF

(6) Network Setting 2: DC-LOOP Check

(a) Use

- Checks the DC loop current before dialing.
- When the current is zero, an error occurs. (T.80)
- You can change the setting to be compliant to standards in other countries. In Japan, set this parameter to OFF.

(b) Default setting

- OFF

(c) Setting item

- ON
- "OFF"

(7) Network Setting 2: min. RING OFF Time

(a) Use

- Minimum time to recognize ringer interval.

For country spec.

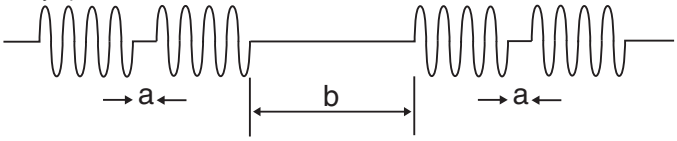

a	To avoid judging "a" as a ring-off time.	b	Ring-off time

(b) Default setting

- 0 ms

(c) Setting range

- "0" to 1000 ms (step: 100 ms)

(8) Network Setting 2: Response Waiting Time

(a) Use

- To set the response waiting time.

(b) Default setting

- 55 s

(c) Setting range

- 35 to 115 sec (step: 5 s)

(9) Network Setting 2: Pause Time

(a) Use

- The pause time for one pause key (pause between digits)

(b) Default setting

- 1 s

(c) Setting range

- "1" to 7 sec (step: 1 s)

11.22.3 Communication

(1) Protocol: V8 / V34 Protocol

(a) Use

- To set whether to use the V.8/V.34 protocol or not.

(b) Default setting

- ON

(c) Setting item

- "ON"
- OFF

(2) Int'l Comm. Function: Foreign Communication Function

(a) Use

- To set whether or not to use the mode that employs the number of DIS waiting times.

(b) Default setting

- ON

(c) Setting item

- "ON"
- OFF

(3) Int'l Comm. Function: No. of DIS Waiting Times at Foreign Communication

(a) Use

- To set the number of DIS waiting times.

(b) Default setting

- 1

(c) Setting item

- "1"
- 2

(4) Int'l Comm. Function: V34 Speed

(a) Use

- To set the V.34 international communication mode speed.

(b) Default setting

- 28800 bps

(c) Setting range

- 16800 to 33600 bps (step: 2400 bps)

(5) Int'l Comm. Function: V17 Speed

(a) Use

- To set the V.17 international communication mode speed.

(b) Default setting

- 7200 bps

(c) Setting range

- "7200" to 14400 bps (step: 2400 bps)

(6) Int'l Comm. Function: V29 Speed

(a) Use

- To set the V.29 international communication mode speed.

(b) Default setting

- 4800 bps

(c) Setting range

- 2400 to 9600 bps (step: 2400 bps)

(7) Others: ECM Function

(a) Use

- Set whether or not to cancel reception ECM (error correction mode).

(b) Default setting

- ON

(c) Setting item

- "ON"
- OFF

(8) Others: Frame Size at ECM TX

(a) Use

- To set the frame size at ECM transmission.

(b) Default setting

- 256

(c) Setting item

- 64
- “256”

(9) Others: Coding Ability

(a) Use

- To set the coding ability.
- Effective to both sending and reception.

(b) Default setting

- MH/MR/MMR/JBIG

(c) Setting item

- MH
- MH/MR
- MH/MR/MMR
- “MH/MR/MMR/JBIG”

11.22.4 Initialization

(1) Use

- The following data can be initialized. Select data you want to initialize and touch the [Yes].

Fax Function Parameter	The function set condition is initialized into the Factory Default condition.

NOTICE

- For the formats of the Abbreviated Registration Data, the Program Registration Data, The Group Registration Data, and the F-code Box Data, see I.11.21.4 Fax File Format.

(2) Procedure

1. Call the Service Mode to the screen.
2. Touch [FAX].
3. Touch [Initialization].
4. Select data you want to initialize.
   Supplement: Two or more selections are possible for data.
5. Touch [Yes].
6. When a verification message is displayed, touch [Yes].
7. The data selected is initialized.

11.23 FAX setting (Address parameter list: for line 1, line 2, line 3 and line 4)

11.23.1 0b000#

Address	Items	Bit No	Contents	Setting	Default			CSRC	
					Japan	North America	Europe	Command	Parameter
0b0000	Redial interval	7	Default	Utility Mode (0-3)	0x03	0x03	0x03	X0	00
		6							
		5							
		4							
		3	Redial interval (min, HEX, 0 - 15)						
		2							
		1							
		0							
0b0001	No. of busy redials	7		Utility Mode (0-2)	0x03	0x01	0x03	X0	01
		6							
		5							
		4							
		3	No. of busy redials (No, HEX, 0 - 15)						
		2							
		1							
		0							

Address	Items	Bit No	Contents	Setting	Default			CSRC	
					Japan	North America	Europe	Command	Parameter
0b0002	No. of error redials	7		Utility Mode Special Setting (0-2)	0x03	0x01	0x03	X0	02
		6							
		5							
		4							
		3	No. of error redials (No, HEX, 0 - 15)						
		2							
		1							
		0							
0b0003	Setting related to FAX memory	7		Utility Mode (0-2) Utility Mode Special Setting (0-2,4)	0x08	0x08	0x08	X0	03
		6	V34 mode at the time of error page redial (0: Inhibited, 1: Enabled)						
		5							
		4	Resend from the first page at the time of error page redial 0: Retransmitted from error page 1: Retransmitted from initial page						
		3	Call acceptance operation with toner empty (0: Refused, 1: Permitted)						
		2							
		1							
		0							
0b0004	FAX communication HP	7		Utility Mode (3-5) Utility Mode Special Setting (2,6,7)	0x05	0x05	0x05	X0	04
		6							
		5	Quick memory transmission (0: OFF, 1: ON)						
		4	File deleted after polled transmission (0: Yes, 1: No)						
		3	Reception mode (0: Auto, 1: Manual)						
		2	V.34 0: OFF 1: ON						
		1	International transmission (0: OFF, 1: ON)						
		0	ECM transmission (0: OFF, 1: ON)						
0b0005	Forward TX Setting	7		Utility Mode (0,1,6)	0x00	0x00	0x00	X0	05
		6	Two-sided recording of FAX (0: Possible. 1: Impossible)						
		5							
		4							
		3	Default transfer FAX setting (00: Not specified, 01: Line 1, 10: Line 2)						
		2							
		1	Forward TX Setting 00: No forwarding 01: Forwarding + Always (print) 10: Forwarding + Only when not delivered (print) 11: Not defined						
		0							
0b0006	FAX reception automatic output setting	7	Two-sided recording	Utility Mode (0,1,2,4,6,7)	0x01	0x01	0x01	X0	06
		6							
		5	Inched recording paper selection						

Address	Items	Bit No	Contents	Setting	Default			CSRC	
					Japan	North America	Europe	Command	Parameter
		4	Fax Output Setting (only for color MFP) 0: Batch Print 1: Page Print NOTE In the case of B&W MFP, only “Batch Print” can be supported. Therefore, always set the value to “0”.						
		3	Face-up output						
		2	Page division recording						
		1 0	Output tray HP 00:Tray 1 01:Tray 2 10:Tray 3 11:Tray 4						
0b0007	FAX reception automatic output setting 2	7	STOP is effected for printing during reception	Utility Mode (2-5) Utility Mode Special Setting (6,7)	0xd4	0xf4	0xd4	X0	07
		6	STOP is effected for printing after reception						
		5	Inched paper priority						
		4 3 2	Paper tray fixing 000: Tray 1 001: Tray 2 010: Tray 3 011: Tray 4 100: LCT 101: Auto						
		1	LG is used.						
		0	LT is used.						
0b0008	Setting of recording paper for reception	7	Selection without A5R 0: A4->B5 1: B5->A4 Only when all of the following conditions are met: A. Destination is “Japan” or “Europe”. B. Fax reception print is set as follows: [“Split print ON” or “Split print OFF”] and [Paper tray/paper size is auto] C. “Letter/Ledger over A4/A3 OFF”	Utility Mode (0,1)	0x00	0x00	0x00	X0	08
		6 5 4 3 2							
		1 0	Paper select mode 00: APS 01: Recording paper designation mode 1 10: Recording paper designation mode 2						
0b0009	Setting of recording paper size for reception	7 6 5		Utility Mode	0x0f	0x1f	0x0f	X0	09
		4 3 2 1 0	01000: A3 01001: B4 01111: A4 10001: 8.5 x 14 11000: 11 x 17 11111: 8.5 x 11						
0b000a	Target reduction rate when A4/LTR is used	7 6 5 4 3 2		-	0x5a	0x5a	0x5a	X0	0A

Address	Items	Bit No	Contents	Setting	Default			CSRC	
					Japan	North America	Europe	Command	Parameter
		1							
		0							
0b000b	Other target reduction rate	7		-	0x5d	0x5d	0x5d	X0	0B
		6							
		5							
		4							
		3							
		2							
		1							
		0							
0b000c	BOOT rewrite on FAX ISW	7		Utility Mode Special Setting (0)	0x00	0x00	0x00	X0	0C
		6							
		5							
		4							
		3							
		2							
		1							
		0	Boot area rewrite 0: No 1: Yes						
0b000d	Reduction rate used in APS	7	Received image reduction rate at APS	-	0x5d	0x5d	0x5d	X0	0D
		6							
		5							
		4							
		3							
		2							
		1							
		0							
0b000e	Minimum reduction rate	7	Received image reduction rate at APS (A3/B4 width)	Utility Mode	0x60	0x60	0x60	X0	0E
		6							
		5							
		4							
		3							
		2							
		1							
		0							
0b000f	Incomplete TX hold	7	Debug mode 0: OFF 1: ON (3min)	Utility Mode (0-3)	0x00	0x00	0x00	X0	0F
		6							
		5							
		4							
		3	File holding time 0000: 12 hours 0001: 24 hours 0010: 48 hours 0011: 72 hours						
		2							
		1							
		0							

11.23.2 0b001#

Address	Items	Bit No	Contents	Setting	Default			CSRC	
					Japan	North America	Europe	Command	Parameter
0b0010	Inter-station timer	7	HEX (unit: second)(00 - ffh)(00 means 03)	-	0x03	0x03	0x03	X0	10
		6							
		5							
		4							
		3							
		2							

Address	Items	Bit No	Contents	Setting	Default			CSRC	
					Japan	North America	Europe	Command	Parameter
		1							
		0							
0b0012 - 0b0015	Reserved area	7		-	0xff	0xff	0xff	X0	12 - 15
		6							
		5							
		4							
		3							
		2							
		1							
		0							
0b0016	PC-FAX RX	7	TSI routing function 0: OFF 1: ON	Utility Mode (0-5)	0x10	0x10	0x10	X0	16
		6	At operation with PC-FAX Rx code unspecified 0: PC Reception 1: Print						
		5	PC-FAX Rx print 0: No 1: Yes						
		4							
		3	PC-FAX reception mode 000: OFF 001: ON + Received at fixed box 010: Dialin + Received at fixed box 011: ON + Received at specified box 100: Dialin + Reception at specified box						
		2							
		1							
		0	Password check 0: OFF 1: ON						
0b0017 - 0b001f	PC-FAX reception password	7	ASCII 20 digits	Utility Mode	ALL 0x20	ALL 0x20	ALL 0x20	X0	17 – 1F
		6							
		5							
		4							
		3							
		2							
		1							
		0							

11.23.3 0b002#

Address	Items	Bit No	Contents	Setting	Default			CSRC	
					Japan	North America	Europe	Command	Parameter
0b0020 - 0b002a	PC-FAX reception password	7	ASCII 20 digits	Utility Mode	ALL 0x20	ALL 0x20	ALL 0x20	X0	20 - 2A
		6							
		5							
		4							
		3							
		2							
		1							
		0							
0b002b	FAX reception automatic output setting 3	7		Utility Mode (0-3)	0x01	0x01	0x01	X0	2B
		6							
		5							
		4							
		3	Output No. of copies Setting range:0 - (15)						
		2							
		1							
		0							

Address	Items	Bit No	Contents	Setting	Default			CSRC	
					Japan	North America	Europe	Command	Parameter
0b002c	Setting for line 2	7	Line 2 transmission setting (00: Transmission/Reception, 01: Reception only, 10: Transmission only)	Utility Mode (0)	0x00	0x00	0x00	X0	2C
		6							
		5							
		4							
		3							
		2							
		1							
		0							
0b002d	PC-FAX Setting	7		Utility Mode (0-1)	0x00	0x00	0x00	X0	2D
		6							
		5							
		4							
		3							
		2							
		1	PC-FAX transmission line specification (00: Not specified, 01: Line 1, 10: Line 2, 11: Reserved)						
		0							

11.23.4 0b003#

Address	Items	Bit No	Contents	Setting	Default			CSRC	
					Japan	North America	Europe	Command	Parameter
0b0032	I-Fax encoding system capability (default for auto transmission capability)	7		Utility Mode (0)	0x04	0x04	0x04	X0	32
		6							
		5							
		4							
		3							
		2	000: (Setting prohibited) 001: MH 010: MR/MH 100: MMR/MR/MH						
		1							
		0							
0b0039	Communication function	7	Interception of 1-address transmission in broadcasting transmission (0: Permitted, 1: Prohibited)	Utility Mode (0-3)	0x44	0x44	0x44	X0	39
		6	ITI printing, unit ID preference function (0: Not preferred, 1: Preferred)						
		5	Dial number duplication check during broadcasting transmission 0: Checked 1: Not checked						
		4	F code transmission function 0: No 1: Yes						
		3	Abandoning error pages during transmission 0: Not abandoned 1: Abandoned						
		2	Incomplete TX hold function 0: Yes 1: No						
		1	Relay reception function 0: Yes 1: No						
		0	Confidential reception function 0: Yes 1: No						
0b003a - 0b003f	Character ID [46]	7	ASCII [46] When ID is less than 46 digits, justify to the left and insert	Utility Mode	ALL 0x00	ALL 0x00	ALL 0x00	X0	3A – 3F
		6							

Address	Items	Bit No	Contents	Setting	Default			CSRC	
					Japan	North America	Europe	Command	Parameter
		5	space at the top. (With NULL terminators)	Service Mode					
		4							
		3							
		2							
		1							
		0							

11.23.5 0b004#, 0b005#

Address	Items	Bit No	Contents	Setting	Default			CSRC	
					Japan	North America	Europe	Command	Parameter
0b0040 - 0b005f	Character ID [46]	7	ASCII [46] When ID is less than 46 digits, justify to the left and insert space at the top. (With NULL terminators)	Utility Mode Service Mode	ALL 0x00	ALL 0x00	ALL 0x00	X0	40 – 5F
		6							
		5							
		4							
		3							
		2							
		1							
		0							

11.23.6 0b006#

Address	Items	Bit No	Contents	Setting	Default			CSRC	
					Japan	North America	Europe	Command	Parameter
0b0060 - 0b0067	Character ID [46]	7	ASCII [46] When ID is less than 46 digits, justify to the left and insert space at the top. (With NULL terminators)	Utility Mode Service Mode	ALL 0x00	ALL 0x00	ALL 0x00	X0	60 - 67
		6							
		5							
		4							
		3							
		2							
		1							
		0							
0b0068	Reception refuse	7		Utility Mode (0)	0x00	0x00	0x00	X0	68
		6							
		5							
		4							
		3							
		2							
		1							
		0	Call acceptance rejected - Number display 0: Disconnected line 1: No response						
0b0069	Recording paper priority selection	7		Utility Mode				X0	69
		6							
		5							
		4							
		3							
		2							
		1	00: Automatic selection 01: Fixed size 10: Priority						
		0							
0b006a	Box number error operation	7		Utility Mode	0x00	0x00	0x00	X0	6A
		6							
		5							

Address	Items	Bit No	Contents	Setting	Default			CSRC	
					Japan	North America	Europe	Command	Parameter
		4	Print or not print the images received when the TSI transfer terminates normally. 0:OFF 1:ON						
		3	Operation with no routing registration or no registered BOX upon the TSI routing turned ON (0: Print output, 1: Saved in forced memory reception BOX)						
		2	Reception of unregistered box sub No. 00: Print 01: Main line 10: Sub line						
		1							
		0							
0b006c	Reserved area	7		Utility Mode	0x00	0x00	0x00	X0	6C
		6							
		5							
		4							
		3							
		2							
		1							
		0							

11.23.7 0e000#

Address	Items	Bit No	Contents	Setting	Default			CSRC	
					Japan	North America	Europe	Command	Parameter
0e0000	Error line processing/ judgment	7	RTP transmission	-	0x01	0x01	0x01	X1	00
		6							
		5	Error line recirculation						
		4	Addition of error sign						
		3							
		2	Judgment of No. of sequential error lines						
		1	Error line rate judgment						
		0	Judgment of No. of error lines						
0e0001	No. of error lines-very good	7	No. of very good judgment lines (HEX) No. of error linesVeryGoodErrorNum, MCF is transmitted.	-	0x10	0x10	0x10	X1	01
		6							
		5							
		4							
		3							
		2							
		1							
		0							
0e0002	No. of error lines-good	7	No. of good judgment error lines (HEX) VeryGoodErrorNum<No. of error linesGoodErrorNum, RTP is transmitted	-	0x40	0x40	0x40	X1	02
		6							
		5							
		4							
		3							
		2							
		1							
		0							
0e0003	No. of error lines-bad	7	No. of bad judgment error lines (HEX) GoodErrorNum<No. of error lines BadErrorNum, RTN is transmitted. No. of error lines>BadErrorNum, it is considered to be error line over.	-	0x80	0x80	0x80	X1	03
		6							
		5							
		4							
		3							

Address	Items	Bit No	Contents	Setting	Default			CSRC	
					Japan	North America	Europe	Command	Parameter
		2							
		1							
		0							
0e0004	Rate of error lines-very good	7	Rate of very good judgment error lines (HEX, %) Rate of error linesVeryGoodErrorPercent, MCF is transmitted.	-	0x05	0x05	0x05	X1	04
		6							
		5							
		4							
		3							
		2							
		1							
		0							
0e0005	Rate of error lines-good	7	Rate of good judgment error lines (HEX, %) VeryGoodErrorPercent<Rate of error linesGoodErrorPercent, RTP is transmitted. Rate of error lines>GoodErrorPercent, RTN is transmitted.	-	0x0a	0x0a	0x0a	X1	05
		6							
		5							
		4							
		3							
		2							
		1							
		0							
0e0006	No. of continuous error lines-bad	7	No. of bad judgment sequential error lines (HEX) Normal No. of sequential error linesErrorContNormal, MCF is transmitted. No. of sequential error lines>ErrorContNormal, RTN is transmitted.	-	0x03	0x03	0x03	X1	06
		6							
		5							
		4							
		3							
		2							
		1							
		0							
0e0007	No. of continuous error lines-bad	7	No. of bad judgment sequential error lines (HEX) Fine No. of sequential error linesErrorContNormal, MCF is transmitted. No. of sequential error lines>ErrorContNormal, RTN is transmitted.	-	0x06	0x06	0x06	X1	07
		6							
		5							
		4							
		3							
		2							
		1							
		0							
0e0008	No. of continuous error lines-bad	7	No. of bad judgment sequential error lines (HEX) 300dpi No. of sequential error linesErrorContNormal, MCF is transmitted. No. of sequential error lines>ErrorContNormal, RTN is transmitted.	-	0x09	0x09	0x09	X1	08
		6							
		5							
		4							
		3							
		2							
		1							
		0							
0e0009	No. of continuous error lines-bad	7	No. of bad judgment sequential error lines (HEX) Super fine No. of sequential error linesErrorContNormal, MCF is transmitted. No. of sequential error lines>ErrorContNormal, RTN is transmitted.	-	0x0c	0x0c	0x0c	X1	09
		6							
		5							
		4							
		3							
		2							
		1							
		0							
0e000a	EP tone addition	7		Utility Mode Special Setting (0,2)	0x06	0x06	0x06	X1	0A
		6							
		5							
		4							
		3							

Address	Items	Bit No	Contents	Setting	Default			CSRC	
					Japan	North America	Europe	Command	Parameter
		2	V.17						
		1	V.33						
		0	V.29						
0e000b	CED detection-transmission frequency	7		-	0x00	0x00	0x00	X1	0B
		6							
		5							
		4							
		3							
		2							
		1	CED detection 0: Detect 1: Not detect						
		0	CED transmission frequency 0: 2100Hz 1: 1100Hz						
0e000c	TSI/CSI/CIG parameter	7	TSI transmission 0: No 1: Always	-	0xe0	0xe0	0xe0	X1	0C
		6	CSI transmission 0: No 1: Always						
		5	CIG transmission 0: No 1: Always						
		4							
		3							
		2							
		1							
		0	Character ID is put on CSI.						
0e000d	G3ModeError	7	Ph-C8 min. limit timer at Non-ECM 0: No 1: Yes	Utility Mode Special Setting (6)	0x00	0x00	0x44	X1	0D
		6	Selection of “-”at dial top 0: OFF 1: ON						
		5	RTN reception 0: step down 1: Line disconnect.						
		4	Remote reception ID received 1: No limit						
		3	DIS retransmission interval in manual reception 0: 4.5 sec. 1: 3.0 sec.						
		2	DCN transmission at T200						
		1	DIS length at reception limited to 4byte 0: No limit 1: Limit						
		0	DCN transmitted at stop of ph.C						
0e000e	Step up/down	7	Strict TCF check 0: Normal 1: Strict check	-	0x00	0x00	0x00	X1	0E
		6							
		5							
		4							
		3							
		2							
		1							

Address	Items	Bit No	Contents	Setting	Default			CSRC	
					Japan	North America	Europe	Command	Parameter
		0	The PC/BC of the PostMsg is checked while in the ECM reception. 0: Yes 1: No						
0e000f	Delay timer between DCS-TCF	7	DCS - TCF delay timer Unit: (10 ms, HEX)	Utility Mode Special Setting	0x08	0x08	0x08	X1	0F
		6							
		5							
		4							
		3							
		2							
		1							
		0							

11.23.8 0e001#

Address	Items	Bit No	Contents	Setting	Default			CSRC	
					Japan	North America	Europe	Command	Parameter
0e0010	Delay timer between PIX-PMC	7	PIX - PMC delay timer Unit: (10 ms, HEX)	Utility Mode Special Setting	0x08	0x08	0x08	X1	10
		6							
		5							
		4							
		3							
		2							
		1							
		0							
0e0011	Delay timer between CED-DIS	7	CED - DIS delay timer (Unit: 10 ms, HEX)	Utility Mode Special Setting	0x08	0x08	0x08	X1	11
		6							
		5							
		4							
		3							
		2							
		1							
		0							
0e0012	T1 timer for calling	7	T1 timer for transmission (Unit: 1sec, HEX)	Utility Mode Special Setting	0x23	0x23	0x23	X1	12
		6							
		5							
		4							
		3							
		2							
		1							
		0							
0e0013	T1 timer for called	7	T1 timer for reception (Unit: 1 sec, HEX)	Utility Mode Special Setting	0x23	0x23	0x23	X1	13
		6							
		5							
		4							
		3							
		2							
		1							
		0							
0e0014	ph.C reception limited time	7	Max. reception time per page (Unit: min, HEX) 1 to 255 min.	-	0x0f	0x0f	0x0f	X1	14
		6							
		5							
		4							
		3							
		2							
		1							
		0							

Address	Items	Bit No	Contents	Setting	Default			CSRC	
					Japan	North America	Europe	Command	Parameter
0e0015	Timer between EOLs	7	EOL - EOL timer (Unit: 100 ms, HEX)	Utility Mode Special Setting	0x82	0x82	0x82	X1	15
		6							
		5							
		4							
		3							
		2							
		1							
		0							
0e0016	Timer between frames	7	Timer between frames (Unit: 1 sec, HEX)	-	0x23	0x23	0x23	X1	16
		6							
		5							
		4							
		3							
		2							
		1							
		0							
0e0017	ANSam signal transmission time	7	ANSam signal transmission time (Unit: 100 ms, HEX)	Utility Mode Special Setting	0x28	0x28	0x28	X1	17
		6							
		5							
		4							
		3							
		2							
		1							
		0							
0e0018	Ci signal transmission time	7	Ci signal transmission time (Unit: 100 ms, HEX)	-	0x05	0x05	0x05	X1	18
		6							
		5							
		4							
		3							
		2							
		1							
		0							
0e0019	High-speed signal transmission waiting delay timer	7	High-speed signal transmission waiting delay timer (Unit: 10 ms, HEX) (Between CFR-PIX/MPS-PIX/CTR-PIX)	-	0x37	0x37	0x37	X1	19
		6							
		5							
		4							
		3							
		2							
		1							
		0							
0e001a	ph.C top dummy data transmitting time	7	ph.C top dummy data transmission time (Unit: 100 ms, HEX) (Dummy data for non-ECM /Preamble at ECM)	-	0x04	0x04	0x04	X1	1A
		6							
		5							
		4							
		3							
		2							
		1							
		0							
0e001b	RTC Counter	7		-	0x01	0x01	0x01	X1	1B
		6							
		5							
		4							
		3							
		2	The EOL counter judged to be RTC 000: EOL*2 001: EOL*3 010: EOL*4 011: EOL*5 100: EOL*6						
		1							
		0							

Address	Items	Bit No	Contents	Setting	Default			CSRC	
					Japan	North America	Europe	Command	Parameter
0e001c	Closed area communication	7		-	0x00	0x00	0x00	X1	1C
		6							
		5							
		4							
		3							
		2	Polling TX						
		1	Polling RX						
		0							
0e001d - 0e001f	Machine password [20]	7	ASCII [20] When ID is less than 20 digits, justify to the left and insert space at the top. (No NULL terminators)	Utility Mode	ALL 0x20	ALL 0x20	ALL 0x20	X1	1D – 1F
		6							
		5							
		4							
		3							
		2							
		1							
		0							

11.23.9 0e002#

Address	Items	Bit No	Contents	Setting	Default			CSRC	
					Japan	North America	Europe	Command	Parameter
0e0020 - 0e002f	Machine password [20]	7	ASCII [20] When ID is less than 20 digits, justify to the left and insert space at the top. (No NULL terminators)	Utility Mode	ALL 0x20	ALL 0x20	ALL 0x20	X1	20 – 2F
		6							
		5							
		4							
		3							
		2							
		1							
		0							

11.23.10 0e003#

Address	Items	Bit No	Contents	Setting	Default			CSRC	
					Japan	North America	Europe	Command	Parameter
0e0030	Machine password [20]	7	ASCII [20] When ID is less than 20 digits, justify to the left and insert space at the top. (No NULL terminators)	Utility Mode	ALL 0x20	ALL 0x20	ALL 0x20	X1	30
		6							
		5							
		4							
		3							
		2							
		1							
		0							
0e0031 - 0e003f	CSRC password [20]	7	ASCII [20] When ID is less than 20 digits, justify to the left and insert space at the top. (No NULL terminators)	-	ALL 0x20	ALL 0x20	ALL 0x20	X1	31 – 3F
		6							
		5							
		4							
		3							
		2							
		1							
		0							

11.23.11 0e004#

Address	Items	Bit No	Contents	Setting	Default			CSRC	
					Japan	North America	Europe	Command	Parameter
0e0040 - 0e0044	CSRC password [20]	7	ASCII [20] When ID is less than 20 digits, justify to the left and insert	-	ALL 0x20	ALL 0x20	ALL 0x20	X1	40 - 44

Address	Items	Bit No	Contents	Setting	Default			CSRC	
					Japan	North America	Europe	Command	Parameter
		6	space at the top. (No NULL terminators)						
		5							
		4							
		3							
		2							
		1							
		0							
0e0045	Watch dog	7		Utility Mode Special Setting (0)	0x01	0x01	0x01	X1	45
		6							
		5							
		4							
		3							
		2							
		1							
		0	Watch dog 0: OFF 1: ON						
0e0046	T2 timer after CFR	7	T2 timer value after CFR x100ms (HEX)	Utility Mode Special Setting	0x3c	0x3c	0x3c	X1	46
		6							
		5							
		4							
		3							
		2							
		1							
		0							
0e0047	T2 timer after EOM	7	T2 timer after EOM x100ms (HEX)	Utility Mode Special Setting	0x37	0x37	0x37	X1	47
		6							
		5							
		4							
		3							
		2							
		1							
		0							
0e0048	JIM waiting timer	7	JM waiting timer value x100ms (HEX)	Utility Mode Special Setting	0x5a	0x5a	0x5a	X1	48
		6							
		5							
		4							
		3							
		2							
		1							
		0							
0e0049	Destination	7	0: US 1: Canada 2: Japan 3: Australia 4: New Zealand 5: Europe 6: Germany 7: UK 8: France 9: Switzerland 10: Netherlands 11: Belgium 12: Austria 13: Norway 14: Sweden 15: Finland 16: Ireland 17: Denmark 18: Italy 19: Spain 20: Portugal 21: Poland 22: South Africa 23: Taiwan 24: Saudi Arabia 25: China 26: Malaysia 27: Singapore 28: Korea 29: Hong Kong 30: General purpose (OT) 31: Argentina 32: Brazil 33: Vietnam 34: Philippines 35: Russia	Service Mode	0x02	0x00	0x05	X1	49
		6							
		5							
		4							
		3							
		2							
		1							
		0							
0e004a	Function when DIS signal is created	7		-	0x01	0x01	0x01	X1	4A
		6							
		5							
		4							
		3							

Address	Items	Bit No	Contents	Setting	Default			CSRC	
					Japan	North America	Europe	Command	Parameter
		2							
		1	Change-over of the silent interval between ANSam and DIS (For revision T.30) 0: Silent interval of 450 ms 1: 75 ms						
		0	V8 capability, if available, of DIS to transmit with V.21 0: V8bitON 1: V8bitOFF						
0e004b	Signal check at the time of F code communication	7		-	0x00	0x00	0x00	X1	4B
		6							
		5							
		4							
		3							
		2							
		1							
		0	Check of PWD and SID received signal in F code communication 0: Signal checked 1: PWD and SID not distinguished						
0e004c	No. of CI signal transmission in manual transmission	7	CI signal repetitive transmission frequency when no ANSam received after CI transmission (times, HEX)	-	0x03	0x03	0x03	X1	4C
		6							
		5							
		4							
		3							
		2							
		1							
		0							
0e004d	Tone detection time (PB)	7	PB OFF time integration 0 to 15 (x10ms) (50ms if 0)	-	0x55	0x55	0x55	X1	4D
		6							
		5							
		4							
		3	PB ON time integration 0 to 15 (x10ms) (50ms if 0)						
		2							
		1							
		0							
0e004e	Time for modem response waiting timeout	7	Waiting event from modem/ Response waiting timeout time (x10sec, HEX) (0 counted as 90 sec.)	-	0x00	0x00	0x00	X1	4E
		6							
		5							
		4							
		3							
		2							
		1							
		0							
0e004f	Continuous CRP reception frequency resulting in an error	7	Sequential CRP reception frequency resulting in error (x1 time, HEX) (0 counted as 3 times)	-	0x00	0x00	0x00	X1	4F
		6							
		5							
		4							
		3							
		2							
		1							
		0							

11.23.12 0e005#

Address	Items	Bit No	Contents	Setting	Default			CSRC	
					Japan	North America	Europe	Command	Parameter
0e0050	1300Hz line seizure parameter detection time	7	1300Hz tone detection time for no-ringing reception (x100ms, HEX)	-	0x17	0x17	0x17	X1	50
		6							
		5							
		4							
		3							
		2							
		1							
		0							
0e0051	1300Hz line seizure parameter detection frequency upper limit	7	1300Hz tone detection frequency upper limit for no-ringing reception (x10Hz, HEX)	-	0x85	0x85	0x85	X1	51
		6							
		5							
		4							
		3							
		2							
		1							
		0							
0e0052	1300Hz line seizure parameter detection frequency lower limit	7	1300Hz tone detection frequency lower limit for no-ringing reception (x10Hz, HEX)	-	0x7f	0x7f	0x7f	X1	52
		6							
		5							
		4							
		3							
		2							
		1							
		0							
0e0053	German specifications	7		-	0x00	0x00	0x0f	X1	53
		6							
		5							
		4							
		3	ERR transmission (DTS sequence)						
		2	DCN reception error ignored						
		1	Line disconnected within 6 sec. after CD OFF in ph.C						
		0	Line disconnected upon reception of DIS to DTC						
0e0054	Retransmission intervals of DIS (Auto reception)	7	DIS re-transmission interval in automatic reception (x0.1 sec.)	-	0x1e	0x1e	0x1e	X1	54
		6							
		5							
		4							
		3							
		2							
		1							
		0							
0e0055	TTI for transmission	7		-	0x03	0x03	0x03	X1	55
		6							
		5							
		4							
		3							
		2							
		1	TTI in transmission TTI added 00: OFF 01: (OFF) 10: INSIDE 11: OUTSIDE						
		0							
0e0056	Image reduction parameter	7		-	0x00	0x00	0x00	X1	56
		6							
		5							
		4							
		3							

Address	Items	Bit No	Contents	Setting	Default			CSRC	
					Japan	North America	Europe	Command	Parameter
		2							
		1							
		0	Reduction parameter in main scanning direction 0: Thick line kept 1: Thick line not kept						
0e0057	Main body polling transmission command wait timer	7	Timer for waiting a transmission command (+FDT) from the main body during turnaround of polling transmission (x100ms, HEX) (0 is defaulted to 8 sec.)	-	0x08	0x08	0x08	X1	57
		6							
		5							
		4							
		3							
		2							
		1							
		0							
0e0058 -	Reserved area	7		-	ALL 0x00	ALL 0x00	ALL 0x00	X1	58 -
		6							
		5							
		4							
		3							
		2							
		1							
		0							

11.23.13 12000#

Address	Items	Bit No	Contents	Setting	Default			CSRC	
					Japan	North America	Europe	Command	Parameter
120000	TTI/RTI setting	7		Utility Mode (0,1,4)	0x03	0x03	0x03	X2	80
		6	SW for prohibiting the printing of the TTI address 0: Printing of the address allowed 1: Printing of the address not allowed						
		5	RTI addition 00:OFF 01: (OFF) 10: INSIDE 11: OUTSIDE						
		4							
		3	TTI denominator display 0: Total 1: Individual						
		2	Inhibition of TTI setting menu INSIDE display 0: No 1: Yes						
		1							
		0							
120001	Report setting 1	7		Utility Mode (2 - 5) Utility Mode Special Setting (6)	6c	6c	6c	X2	81
		6	Addition of image 0: No, 1: Yes						
		5	Automatic output of reserved report 0: No, 1: Yes						
		4	TX result report 00: Not output 01: Output only at errors 10: Always output 11: (Normal output)						
		3							
		2	Automatic output of sequential communication report 0: No, 1: Yes						
		1							
		0							

Address	Items	Bit No	Contents	Setting	Default			CSRC	
					Japan	North America	Europe	Command	Parameter
120002	Report setting 2	7	The FAX CSRC communication log is printed on the Activity Report 0: No, 1: Yes	Utility Mode (0 - 2) Utility Mode Special Setting (0,1)	0x04	0x04	0x04	X2	82
		6							
		5							
		4	Abbreviation List 0: numerical order 1: sorted order						
		3	Automatic daily output of journal 0: No 1: Yes						
		2	Automatic output of journal 100 communication 0: No 1: Yes						
		1	Automatic output or error trace list 0: No 1: Yes						
		0	Automatic output of trace list 0: No 1: Yes						
120003	Output time of daily automatic output of journal (hour: grade of 10)	7	Designation of 24 hours ASCII four-digit	-	0x30	0x30	0x30	X2	83
		6							
		5							
		4							
		3							
		2							
		1							
		0							
120004	Output time of daily automatic output of journal (hour: grade of 1)	7	Designation of 24 hours ASCII four-digit	-	0x39	0x39	0x39	X2	84
		6							
		5							
		4							
		3							
		2							
		1							
		0							
120005	Output time of daily automatic output of journal (minute: grade of 10)	7	Designation of 24 hours ASCII four-digit	-	0x30	0x30	0x30	X2	85
		6							
		5							
		4							
		3							
		2							
		1							
		0							
120006	Output time of daily automatic output of journal (minute: grade of 1)	7	Designation of 24 hours ASCII four-digit	-	0x30	0x30	0x30	X2	86
		6							
		5							
		4							
		3							
		2							
		1							
		0							
120007	Output setting	7	Setting of daily difference for daily mode set for automatic output 0: Daily difference not limited 1: Daily difference limited	Utility Mode (3 - 5) Utility Mode Special Setting (0)	0x00	0x00	0x00	X2	87
		6							

Address	Items	Bit No	Contents	Setting	Default			CSRC	
					Japan	North America	Europe	Command	Parameter
		5	Transmission result report selection screen 0: Not displayed 1: Displayed						
		4	Broadcast result report output method 0: All destinations 1: 1Each destination						
		3	Printing during auxiliary power OFF 0: No 1: Yes						
		2	Output order of journal transmission result reservation report 0: From old one 1: From new one						
		1							
		0							
120008	Invisible mode	7		-	0	0	0	X2	88
		6							
		5							
		4							
		3							
		2	Display of PCFAX TX [PC] in Note of report 0: No 1: Yes						
		1							
		0	Details of remote station display during program direct registered calls and abbreviated dialing 0: Display of registered name 1: Display of number						
120009	Reserved area	7		-	0x00	0x00	0x00	X2	89
		6							
		5							
		4							
		3							
		2							
		1							
		0							
12000b	F code report setting	7		Utility Mode (0 - 3)	0x0f	0x0f	0x0f	X2	8B
		6							
		5							
		4							
		3	Relay request report output 0: No 1: Yes						
		2	Relay TX result report output 0: No 1: Yes						
		1	Bulletin polling transmission report output 0: No 1: Yes						
		0	Confidential reception report output 0: No 1: Yes						
12000c	Internet Fax report Setting	7		Utility Mode	0x61	0x61	0x61	X2	8C
		6	Network Fax RX Error Report (0: OFF, 1: ON)						
		5	Internet Broadcast Fax Result Report (0: OFF, 1: ON)						

Address	Items	Bit No	Contents	Setting	Default			CSRC	
					Japan	North America	Europe	Command	Parameter
		4							
		3	E-Mail Message Body printing (0: ON, 1: OFF)						
		2	TX Error Report printing (0: ON, 1: OFF)						
		1	MDN Message printing (0: ON, 1: OFF)						
		0	DSN Message printing (0: ON, 1: OFF)						
12000d	FAX report setting	7		Utility Mode	0x00	0x00	0x00	X2	8D
		6							
		5							
		4							
		3							
		2							
		1	PC-Fax Error report output 0: No, 1: Yes						
		0	Relay print 0: No, 1: Yes						
12000e - 12000f	Reserved area	7		-	0x00	0x00	0x00	X2	8E - 9F
		6							
		5							
		4							
		3							
		2							
		1							
		0							

11.23.14 13000#

Address	Items	Bit No	Contents	Setting	Default			CSRC	
					Japan	North America	Europe	Command	Parameter
130000	Reserved area	7		Utility Mode	0x11	0x11	0x11	XE	00
		6							
		5							
		4							
		3							
		2							
		1							
		0							
130001	FAX scan HP2	7	Frame erasure HP 01: 5mm 10: 10mm 11: 15mm	Utility Mode Special Setting (6,7)	0x41	0x41	0x41	XE	01
		6							
		5							
		4							
		3							
		2							
		1							
		0							
130002	FAX scan HP3	7		Utility Mode Special Setting (0,1,2)	0x04	0x04	0x04	XE	02
		6							
		5							
		4							
		3							
		2	Original reading mode 00: Normal 01: Mixed size 10: DF irregular						
		1							
		0	Scanned from the right side at book transmission						

Address	Items	Bit No	Contents	Setting	Default			CSRC	
					Japan	North America	Europe	Command	Parameter
130003	Reserved area	7		-	0x06	0x06	0x06	XE	03
		6							
		5							
		4							
		3							
		2							
		1							
		0							
130004	Reserved area	7		-	0x09	0x09	0x09	XE	04
		6							
		5							
		4							
		3							
		2							
		1							
		0							
130005	Reserved area	7		-	0x05	0x05	0x05	XE	05
		6							
		5							
		4							
		3							
		2							
		1							
		0							
130006	Reserved area	7		-	0x01	0x01	0x01	XE	06
		6							
		5							
		4							
		3							
		2							
		1							
		0							
130007	HP for FAX main screen	7	FAX main screen selection 0000: Program 0001: Group 0010: Abbreviation 0011: Keypad	Utility Mode (2 - 7)	0x09	0x09	0x09	XE	07
		6							
		5							
		4							
		3	Automatic screen switching at the time of reception 0: ON 1: OFF						
		2							
		1							
		0							
130008	Rotation setting HP	7		Utility Mode Special Setting (0,1)	0x03	0x03	0x03	XE	08
		6							
		5							
		4							
		3							
		2	B5R 0: No 1: Yes						
		1	Letter 0: No 1: Yes						
		0	A4 0: No 1: Yes						
130009	Reserved area	7	Time until auto reset 0: OFF, 1-9 min.	-	0x00	0x00	0x00	XE	09

Address	Items	Bit No	Contents	Setting	Default			CSRC	
					Japan	North America	Europe	Command	Parameter
		6							
		5							
		4							
		3							
		2							
		1							
		0							
13000a	Not used.	7		-				XE	0A
		6							
		5							
		4							
		3							
		2							
		1							
		0							
13000b	Error display time	7	10 - 250 seconds, 0: Error display HOLD	Utility Mode Special Setting	0x14	0x14	0x14	XE	0B
		6							
		5							
		4							
		3							
		2							
		1							
		0							
13000c	Reserved area	7		-	0x00	0x00	0x00	XE	0C
		6							
		5							
		4							
		3							
		2							
		1							
		0							
13000d	Reserved area	7		-	0x05	0x05	0x05	XE	0D
		6							
		5							
		4							
		3							
		2							
		1							
		0							
13000e	Reserved area	7		-	0x00	0x00	0x00	XE	0E - 34
		6							
		5							
		4							
		3							
		2							
		1							
		0							

11.23.15 13003#

Address	Items	Bit No	Contents	Setting	Default			CSRC	
					Japan	North America	Europe	Command	Parameter
130035	Utility Mode display setting	7	Relay display 0: Yes 1: No	Utility Mode Special Setting	0x00	0x0b	0x0b	XE	35
		6							

Address	Items	Bit No	Contents	Setting	Default			CSRC	
					Japan	North America	Europe	Command	Parameter
		5	Incomplete TX hold display 0: Yes 1: No						
		4	Compulsory memory reception display 0: Yes 1: No						
		3	Caller No./Name display 0: Yes 1: No						
		2	Closed communication display 0: Yes 1: No						
		1	Remote reception display 0: Yes 1: No						
		0	DialIn display 0: Yes 1: No						
130036	Utility Mode display setting 2	7		Utility Mode Special Setting (0,1)	0x05	0x0f	0x07	XE	36
		6							
		5							
		4							
		3	OFF display of Header Position 0: Yes 1: No						
		2							
		1	Receive reject display 0: Yes 1: No						
		0							
130037	Not used.	7		-				XE	37
		6							
		5							
		4							
		3							
		2							
		1							
		0							
130038	Destination default screen setting	7	0x00: Group 0x01: FAX 0x02: E-mail 0x03: BOX 0x04: I-Fax 0x05: IP address FAX 0x06: SMB 0x07: FTP 0x08: WebDAV	-	0x00	0x00	0x00	XE	38
		6							
		5							
		4							
		3							
		2							
		1							
		0							
130039-13003f	Reserved area	7		Utility Mode	0x00	0x00	0x00	XE	39 – 3F
		6							
		5							
		4							
		3							
		2							
		1							
		0							

11.23.16 13004#

Address	Items	Bit No	Contents	Setting	Default			CSRC	
					Japan	North America	Europe	Command	Parameter
130040-130044	Reserved area	7		Utility Mode	0x00	0x00	0x00	XE	40 - 44
		6							
		5							
		4							
		3							
		2							
		1							
		0							
130045 – 13004f	DialIn additional No. (FAX)	7	ASCII 11 digits + NULL	Utility Mode	ALL 0x00	ALL 0x00	ALL 0x00	XE	45 – 4F
		6							
		5							
		4							
		3							
		2							
		1							
		0							

11.23.17 13005#

Address	Items	Bit No	Contents	Setting	Default			CSRC	
					Japan	North America	Europe	Command	Parameter
130050	DialIn additional No. (FAX)	7	ASCII 11 digits + NULL	Utility Mode	ALL 0x00	ALL 0x00	ALL 0x00	XE	50
		6							
		5							
		4							
		3							
		2							
		1							
		0							
130051 - 13005c	DialIn additional No. (PC-FAX)	7	ASCII 11 digits + NULL ALL	Utility Mode	ALL 0x00	ALL 0x00	ALL 0x00	XE	51 - 5C
		6							
		5							
		4							
		3							
		2							
		1							
		0							
13005d – 13005f	DialIn additional No. (telephone)	7	ASCII 11 digits + NULL ALL	Utility Mode	ALL 0x00	ALL 0x00	ALL 0x00	XE	5D – 5F
		6							
		5							
		4							
		3							
		2							
		1							
		0							

11.23.18 13006#

Address	Items	Bit No	Contents	Setting	Default			CSRC	
					Japan	North America	Europe	Command	Parameter
130060 - 130068	DialIn additional No. (telephone)	7	ASCII 11 digits + NULL ALL	Utility Mode	ALL 0x00	ALL 0x00	ALL 0x00	XE	60 - 68
		6							
		5							
		4							
		3							

Address	Items	Bit No	Contents	Setting	Default			CSRC	
					Japan	North America	Europe	Command	Parameter
		2							
		1							
		0							
130069	Upper limit for signal transmission level setting	7	(-dBm) Switched according to destination of FAX	Utility Mode Special Setting	0x0a	0x0a	0x08	XE	69
		6							
		5							
		4							
		3							
		2							
		1							
		0							
13006a	Lower limit for call termination frequency setting range	7	(No. of times) Switched according to destination of FAX	Utility Mode	0x00	0x00	0x00	XE	6A
		6							
		5							
		4							
		3							
		2							
		1							
		0							
13006b	Upper limit for call termination frequency setting range	7	(No. of times) Switched according to destination of FAX	Utility Mode	0x0f	0x0f	0x0f	XE	6B
		6							
		5							
		4							
		3							
		2							
		1							
		0							
13006c	Dial method setting	7		-	0x00	0x22	0x11	XE	6C
		6							
		5							
		4							
		3							
		2							
		1	Dial method setting (Switched according to destination of FAX) 00: PB, 10pps, 20pps 01: PB 10: PB, 10pps 11: PB, 10pps, 16pps						
		0							
13006d	Upper limit for redial frequency setting range	7	(No. of times) Switched according to destination of FAX	Utility Mode Utility Mode Special Setting	0x07	0x01	0x07	XE	6D
		6							
		5							
		4							
		3							
		2							
		1							
		0							
13006e	Upper limit for redial interval setting range	7	(Minutes) Switched according to destination of FAX	Utility Mode	0x01	0x01	0x01	XE	6E
		6							
		5							
		4							
		3							
		2							
		1							
		0							
13006f	Lower limit for redial interval setting range	7	(Minutes) Switched according to destination of FAX	Utility Mode	0x0f	0x0f	0x0f	XE	6F
		6							

Address	Items	Bit No	Contents	Setting	Default			CSRC	
					Japan	North America	Europe	Command	Parameter
		5							
		4							
		3							
		2							
		1							
		0							

11.23.19 13007#

Address	Items	Bit No	Contents	Setting	Default			CSRC	
					Japan	North America	Europe	Command	Parameter
130070	Telephone-related function setting menu display (1)	7		Utility Mode(0, 1) Utility Mode Special Setting (2 - 6)	0x7f	0x00	0x00	XE	70
		6	Remote reception 0: OFF 1: ON						
		5	Dial-in 0: OFF 1: ON						
		4	Number display 0: OFF 1: ON						
		3	Pseudo RBT form 0: OFF 1: ON						
		2	Pseudo RBT transmission level 0: OFF 1: ON						
		1	Connection to answering machine 0: OFF 1: ON						
		0	TEL/FAX switching 0: OFF 1: ON						
130071	Number display related function setting	7		Utility Mode	0x00	0x00	0x00	XE	71
		6							
		5							
		4							
		3	Name display at the time of FAX reception (line 2) 00: No display 01: Display of number 10: Display of name						
		2							
		1	Name displayed Type of display at fax reception 00: Not displayed 01: Number displayed 10: Name displayed						
		0							
130072	Setting of lower limit for DTMF transmission level setting range	7	(-dBm) Switched according to destination of FAX	-	0x0e	0x0f	0x09	XE	72
		6							
		5							
		4							
		3							
		2							
		1							
		0							
130073	Setting of upper limit for DTMF transmission level setting range	7	(-dBm) Switched according to destination of FAX	-	0x0a	0x0a	0x05	XE	73
		6							
		5							
		4							
		3							
		2							
		1							

Address	Items	Bit No	Contents	Setting	Default			CSRC	
					Japan	North America	Europe	Command	Parameter
		0							
130074	Setting of lower limit for DTMF H-L level difference setting range	7	(dB) Switched according to destination of FAX	-	0x01	0x01	0x01	XE	74
		6							
		5							
		4							
		3							
		2							
		1							
		0							
130075	Setting of upper limit for DTMF H-L level difference setting range	7	(dB) Switched according to destination of FAX	-	0x04	0x04	0x04	XE	75
		6							
		5							
		4							
		3							
		2							
		1							
		0							
130076	For transmission	7		-	0x00	0x00	0x00	XE	76
		6							
		5							
		4							
		3							
		2	Restrict Plural Fax Destination 0: OFF 1: ON						
		1	Destination Check Display Function 0: OFF 1: ON						
		0	Screen display during transmission 0: OFF 1: ON						
130077	Lower limit setting of the signal send-out level setting range	7	(-dBm) Switched according to destination of FAX	-	0x0f	0x0f	0x0f	XE	77
		6							
		5							
		4							
		3							
		2							
		1							
		0							
130078 - 13007b	Character-to-search default for FAX main screen	7	bit0 :[Main] 0: OFF, 1: ON bit10 :[ABC] 0: OFF, 1: ON bit11 :[DEF] 0: OFF, 1: ON bit12 :[GHI] 0: OFF, 1: ON bit13 :[JKL] 0: OFF, 1: ON bit14 :[MNO] 0: OFF, 1: ON bit15 :[PQRS] 0: OFF, 1: ON bit16 :[TUV] 0: OFF, 1: ON bit17 :[WXYZ] 0: OFF, 1: ON bit18 :[etc] 0: OFF, 1: ON	-	0x01	0x01	0x01	XE	78 - 7B
		6							
		5							
		4							
		3							
		2							
		1							
		0							
13007c	Not used.	7		-				XE	7C
		6							
		5							
		4							
		3							
		2							
		1							
		0							
13007d	Initial program display page	7	1 - 27 page (HEX: 0x01 - 0x1b), 0: Temporary distribution	-	0x01	0x01	0x01	XE	7D
		6							
		5							

Address	Items	Bit No	Contents	Setting	Default			CSRC	
					Japan	North America	Europe	Command	Parameter
		4							
		3							
		2							
		1							
		0							

11.23.20 13008#

Address	Items	Bit No	Contents	Setting	Default			CSRC	
					Japan	North America	Europe	Command	Parameter
130080 – 130083	Reserved area	7		-	0x00	0x00	0x00	XE	80 – 83
		6							
		5							
		4							
		3							
		2							
		1							
		0							
130084	No. of destination display characters setting	7	0x0e: 14 characters 0x18: 24 characters 4	-	0x0e	0x0e	0x0e	XE	84
		6							
		5							
		4							
		3							
		2							
		1							
		0							

11.24 FAX setting (Address parameter list: for line 1)

11.24.1 0e009#

Address	Items	Bit No	Contents	Setting	Default			CSRC	
					Japan	North America	Europe	Command	Parameter
0e0090	Transmission ATT	7	Tone signal/FSK transmission ATT (HEX) every 1 dBm (0 to -15dBm)	Utility Mode Special Setting	0xaa	0xaa	0xaa	XB	00
		6							
		5							
		4							
		3	High-speed signal transmission ATT (HEX) every 1 dBm (0 to -15dBm)						
		2							
		1							
		0							
0e0091	CED transmission ATT	7		Utility Mode Special Setting (0-3)	0x0a	0x0a	0x0a	XB	01
		6							
		5							
		4							
		3	CED/ANS transmission ATT (HEX) every 1 dBm (0 to -15dBm)						
		2							
		1							
		0							
0e0092	CD/SED ON level	7		Utility Mode Special Setting (0,1)	0x03	0x03	0x03	XB	02
		6							
		5							
		4							
		3							
		2							
		1	CD/SED ON level [dBm] 00: -33 01: -38						

Address	Items	Bit No	Contents	Setting	Default			CSRC	
					Japan	North America	Europe	Command	Parameter
		0	10: -43 11: -48						
0e0093	Transmission cable amplitude EQL	7		Utility Mode Special Setting (4,5)	0x00	0x00	0x00	XB	03
		6							
		5	Transmission cable EQL 00: 0dB 01: 4dB 10: 8dB 11: 12dB						
		4							
		3							
		2							
		1							
		0							
0e0094	Reception cable amplitude EQL	7		Utility Mode Special Setting (4,5)	0x00	0x00	0x00	XB	04
		6							
		5	Reception cable EQL 00: 0dB 01: 4dB 10: 8dB 11: 12dB						
		4							
		3							
		2							
		1							
		0							
0e0095	TEL/FAX switching	7	Time from vocal response to RBT transmission (CNG detection waiting time 2) 0: 4 sec. 1: 2 sec.	Utility Mode Special Setting (4,5)	0x00	0x00	0x00	XB	05
		6	Time from reception to voice response transmission (CNG detection waiting time 1) 0: 2 sec. 1: 4 sec.						
		5	TEL/FAX switching mode 0: Disabled 1: Enabled						
		4	External telephone no ringing setting 0: Disabled 1: Enabled (disconnected)						
		3	TEL/FAX switching ON response details 0: Voice response + RBT transmission 1: RBT transmission only						
		2							
		1							
		0							
0e0096	Ring Back Tone parameter	7	RBT format 000: None 001: Japan 010: US 011: UK 100: Germany 101 to 111: Others	Utility Mode Special Setting (0-3,5-7)	0x2a	0x4a	0x68	XB	06
		6							
		5							
		4	CED transmitted upon TEL/FAX switching						
		3	RBT transmission level (HEX) 0 to -15 dBm						
		2							
		1							
		0							
0e0097	International com mode operation	7	DIS waiting frequency 0: Always 1 time 1: Twice in overseas communication	Utility Mode Special	0x40	0x40	0x40	XB	07

Address	Items	Bit No	Contents	Setting	Default			CSRC	
					Japan	North America	Europe	Command	Parameter
		6	Overseas communication 0: No 1: Yes	Setting (6,7)					
		5							
		4							
		3							
		2							
		1							
		0							
0e0098	Starting speed in international mode (V29 modem)	7		Utility Mode Special Setting (0,1,3,4)	0x02	0x02	0x02	XB	08
		6							
		5							
		4	9600bps/V.29						
		3	7200bps/V.29						
		2							
		1	4800bps/V.27ter						
		0	2400bps/V.27ter						
0e0099	Starting speed in international mode (V17 or V33 modem)	7	14400bps/V.17	Utility Mode Special Setting (4-7)	0x10	0x10	0x10	XB	09
		6	12000bps/V.17						
		5	9600bps/V.17						
		4	7200bps/V.17						
		3							
		2							
		1							
		0							
0e009a	Starting speed in international mode (V34)	7	33600bps/V.34	Utility Mode Special Setting	0x20	0x20	0x20	XB	0A
		6	31200bps/V.34						
		5	28800bps/V.34						
		4	26400bps/V.34						
		3	24000bps/V.34						
		2	21600bps/V.34						
		1	19200bps/V.34						
		0	16800bps/V.34						
0e009b	CD OFF timer	7	CD OFF timer (Unit: 100 ms, HEX)	-	0x14	0x14	0x14	XB	0B
		6							
		5							
		4							
		3							
		2							
		1							
		0							
0e009c	CD ON integration time	7	CD ON integration time (Unit: 100 ms. HEX)	-	0x06	0x06	0x06	XB	0C
		6							
		5							
		4							
		3							
		2							
		1							
		0							
0e009d	Symbol rate maximum allowable value	7	V34 controlled ch data rate 0: 1200 1: 2400	Utility Mode Special Setting (0-3,7)	0x05	0x05	0x05	XB	0D
		6							
		5							
		4							
		3	Max. allowable symbol speed 0000: 2400 0001: Reserved						
		2							

Address	Items	Bit No	Contents	Setting	Default			CSRC	
					Japan	North America	Europe	Command	Parameter
		1 0	0010: 2800 0011: 3000 0100: 3200 0101: 3429						
0e009e	Symbol rate selection criteria	7 6 5 4	Attenuation distortion property (-6dB to +6dB) 0000:-6, 0001:-5, 0010:-4, 0011:-3, 0100:-2, 0101:-1, 0110:0, 0111:+1, 1000:+2, 1001:+3, 1010:+4, 1011:+5, 1100:+6	Utility Mode Special Setting	0x66	0x66	0x66	XB	0E
		3 2 1 0	Band end S/N (-6dB to +6dB) 0000:-6, 0001:-5, 0010:-4, 0011:-3, 0100:-2, 0101:-1, 0110:0, 0111:+1, 1000:+2, 1001:+3, 1010:+4, 1011:+5, 1100:+6						
0e009f	Primary channel data rate selection criteria	7 6 5 4	V.34 reception gain correction (-4.0dB to +3.5dB) 0000:0, 0001:+0.5, 0010:+1.0, 0011:+1.5, 0100:+2.0, 0101:+2.5, 0110:+3.0, 0111:+3.5, 1000:-4.0, 1001:-3.5, 1010:-3.0, 1011:-2.5, 1100:-2.0, 1101:-1.5, 1110:-1.0, 1111:-0.5	Utility Mode Special Setting (0-3)	0x08	0x08	0x08	XB	0F
		3 2 1 0	Primary channel data rate selection criteria (-8dB to +7dB) 0000:-8, 0001:-7, 0010:-6, 0011:-5, 0100:-4, 0101:-3, 0110:-2, 0111:-1, 1000:0, 1001:+1, 1010:+2, 1011:+3, 1100:+4, 1101:+5, 1110:+6, 1111:+7						

11.24.2 0e00a#

Address	Items	Bit No	Contents	Setting	Default			CSRC	
					Japan	North America	Europe	Command	Parameter
0e00a0	V34 primary channel fallback	7 6 5 4 3 2 1 0	No. of frame errors subjected to fallback (HEX)	-	0x03	0x03	0x03	XB	10
0e00a1	V34 control channel fallback	7 6 5 4 3 2 1 0	EQMVAL value for fallback (HEX)	-	0x40	0x40	0x40	XB	11
0e00a2	V34 off Rx-V34 off time after error	7 6 5 4 3 2 1 0	Timer value after V34 reception error used to reset V34 off reception (min, HEX) (Valid only when transmission side cannot be specified)	-	0x0a	0x0a	0x0a	XB	12
0e00a3	V34 off Rx-V17 OK Rx times to reset V34 off Rx	7 6 5 4	No. of continuous success of V17 receptions used to reset V34 off reception after V34 reception error (times, HEX)	-	0x0a	0x0a	0x0a	XB	13

Address	Items	Bit No	Contents	Setting	Default			CSRC	
					Japan	North America	Europe	Command	Parameter
		3	(Valid only when transmission side can be specified with Caller ID)						
		2							
		1							
		0							
0e00a4	(Inhibit of) V34 off Rx-Function ON/OFF	7	V34off function for manual reception 0: Enable 1: Disable	-	0x00	0x02	0x02	XB	14
		6							
		5							
		4							
		3							
		2							
		1	V.34 OFF reset mode = No. of successful consecutive V.17 reception times (ID specified) 0: Enabled 1: Disabled						
		0	V.34 OFF reset mode = time (ID cannot be specified) 0: Enabled 1: Disabled						
0e00a5	JBIG parameter	7		-	0x01	0x01	0x01	XB	15
		6							
		5							
		4							
		3							
		2							
		1	Use of following FP JBIG option LO size at reduction 0: No, 1: Yes						
		0	JBIG optional L0 capacity 0: No, 1: Yes						
0e00a6 - 0e00a9	JBIG LO size	7	JBIG optional LO size used for reduction (HEX) (setting range: 0x01to0xffffffff) [0] = HH, [1] = HL, [2] = LH, [3] = LL	-	0x00 0x00 0x00 0x80	0x00 0x00 0x00 0x80	0x00 0x00 0x00 0x80	XB	16 - 19
		6							
		5							
		4							
		3							
		2							
		1							
		0							
0e00aa	(Inhibit of) JBIG off Rx-Function ON/ OFF	7		-	0x00	0x00	0x00	XB	1A
		6							
		5							
		4							
		3							
		2							
		1	JBIG off function at A3 high-definition reception (DIS re-transmission) 0: OFF, 1: ON						
		0	JBIG off function after JBIG reception error 0: Enable 1: Disable						
0e00ab	JBIG off Rx-JBIG off time after error	7	Timer value after JBIG reception error to reset JBIG off reception (min, HEX)(10 min. if 0)	-	0x0a	0x0a	0x0a	XB	1B
		6							
		5							
		4							
		3							
		2							
		1							

Address	Items	Bit No	Contents	Setting	Default			CSRC	
					Japan	North America	Europe	Command	Parameter
		0							
0e00ac	PBX dial tone detection frequency upper limits	7	PBX dial tone detection frequency upper limit (unit: 10 Hz, HEX)	-	0x31	0x00	0x00	XB	1C
		6							
		5							
		4							
		3							
		2							
		1							
		0							
0e00ad	PBX dial tone detection frequency lower limits	7	PBX dial tone detection frequency lower limit (unit: 10 Hz, HEX)	-	0x1f	0x00	0x00	XB	1D
		6							
		5							
		4							
		3							
		2							
		1							
		0							
0e00ae	PBX dial tone detection time	7	PBX dial tone detection time or max. ON time value (unit: 20 ms, HEX)	-	0x32	0x00	0x00	XB	1E
		6							
		5							
		4							
		3							
		2							
		1							
		0							
0e00af	PBX dial tone ON time min. value	7	PBX dial tone ON time min. value (unit: 20ms, HEX)	-	0x00	0x00	0x00	XB	1F
		6							
		5							
		4							
		3							
		2							
		1							
		0							

11.24.3 0e00b#

Address	Items	Bit No	Contents	Setting	Default			CSRC	
					Japan	North America	Europe	Command	Parameter
0e00b0	PBX dial tone OFF time max. value	7	PBX dial tone OFF time max. value (unit: 20 ms, HEX)	-	0x00	0x00	0x00	XB	20
		6							
		5							
		4							
		3							
		2							
		1							
		0							
0e00b1	PBX dial tone OFF time min. value	7	PBX dial tone OFF time min. value (unit: 20 ms, HEX)	-	0x00	0x00	0x00	XB	21
		6							
		5							
		4							
		3							
		2							
		1							
		0							
0e00b2	PBX dial tone waiting time	7	PBX dial tone waiting time or pre-pause time (unit: 1 sec, HEX)	-	0x03	0x03	0x03	XB	22
		6							

Address	Items	Bit No	Contents	Setting	Default			CSRC	
					Japan	North America	Europe	Command	Parameter
		5							
		4							
		3							
		2							
		1							
		0							
0e00b3	PBX dial tone instantaneous break detection time	7	Instantaneous shutdown time (unit: 20 ms, HEX) or tone detection frequency (times, HEX)	-	0x00	0x00	0x00	XB	23
		6							
		5							
		4							
		3							
		2							
		1							
		0							
0e00b4	1st dial tone detection frequency upper limits	7	1st dial tone detection frequency upper limit (unit: 10 Hz, HEX)	-	0x31	0x35	0x34	XB	24
		6							
		5							
		4							
		3							
		2							
		1							
		0							
0e00b5	1st dial tone detection frequency lower limits	7	1st dial tone detection frequency lower limit (unit: 10 Hz, HEX)	-	0x1f	0x23	0x1c	XB	25
		6							
		5							
		4							
		3							
		2							
		1							
		0							
0e00b6	1st dial tone detection time	7	1st dial tone detection time or ON time max. value (unit: 20 ms, HEX)	-	0x32	0x32	0x1a	XB	26
		6							
		5							
		4							
		3							
		2							
		1							
		0							
0e00b7	1st dial tone ON time min. value	7	1st dial tone ON time min. value (unit: 20 ms, HEX)	-	0x00	0x00	0x00	XB	27
		6							
		5							
		4							
		3							
		2							
		1							
		0							
0e00b8	1st dial tone OFF time max. value	7	1st dial tone OFF time max. value (unit: 20 ms, HEX)	-	0x00	0x00	0x00	XB	28
		6							
		5							
		4							
		3							
		2							
		1							
		0							
0e00b9	1st dial tone OFF time min. value	7	1st dial tone OFF time min. value (unit: 20 ms, HEX)	-	0x00	0x00	0x00	XB	29
		6							

Address	Items	Bit No	Contents	Setting	Default			CSRC	
					Japan	North America	Europe	Command	Parameter
		5							
		4							
		3							
		2							
		1							
		0							
0e00ba	1st dial tone waiting time	7	1st dial tone waiting time or pre-pause time (unit: 1 sec, HEX)	-	0x03	0x03	0x04	XB	2A
		6							
		5							
		4							
		3							
		2							
		1							
		0							
0e00bb	1st dial tone instantaneous break detection time	7	Instantaneous shutdown detection time (unit: 20 ms, HEX) or tone detection frequency (times, HEX)	-	0x00	0x00	0x05	XB	2B
		6							
		5							
		4							
		3							
		2							
		1							
		0							
0e00bc	2nd dial tone detection frequency upper limits	7	2nd dial tone detection frequency upper limit (unit: 10 Hz, HEX)	-	0x31	0x00	0x00	XB	2C
		6							
		5							
		4							
		3							
		2							
		1							
		0							
0e00bd	2nd dial tone detection frequency lower limits	7	2nd dial tone detection frequency lower limit (unit: 10 Hz, HEX)	-	0x1f	0x00	0x00	XB	2D
		6							
		5							
		4							
		3							
		2							
		1							
		0							
0e00be	2nd dial tone detection time	7	2nd dial tone detection time or ON time max. value (unit: 20 ms, HEX)	-	0x08	0x00	0x00	XB	2E
		6							
		5							
		4							
		3							
		2							
		1							
		0							
0e00bf	2nd dial tone ON time min. value	7	2nd dial tone ON time min. value (20 ms, HEX)	-	0x02	0x00	0x00	XB	2F
		6							
		5							
		4							
		3							
		2							
		1							
		0							

11.24.4 0e00c#

Address	Items	Bit No	Contents	Setting	Default			CSRC	
					Japan	North America	Europe	Command	Parameter
0e00c0	2nd dial tone OFF time max. value	7	2nd dial tone OFF time max. value (unit: 20 ms, HEX)	-	0x0a	0x00	0x00	XB	30
		6							
		5							
		4							
		3							
		2							
		1							
		0							
0e00c1	2nd dial tone OFF time min. value	7	2nd dial tone OFF time min. value (20 ms, HEX)	-	0x04	0x00	0x00	XB	31
		6							
		5							
		4							
		3							
		2							
		1							
		0							
0e00c2	2nd dial tone waiting time	7	2nd dial tone waiting time or pre-pause time (unit: 1 sec, HEX)	-	0x03	0x03	0x03	XB	32
		6							
		5							
		4							
		3							
		2							
		1							
		0							
0e00c3	2nd dial tone instantaneous break detection time	7	Instantaneous shutdown detection time (unit: 20 ms, HEX) or tone detection frequency (times, HEX)	-	0x03	0x00	0x00	XB	33
		6							
		5							
		4							
		3							
		2							
		1							
		0							
0e00c4	3rd dial tone detection frequency upper limits	7	3rd dial tone detection frequency upper limit (unit: 10 Hz, HEX)	-	0x00	0x00	0x00	XB	34
		6							
		5							
		4							
		3							
		2							
		1							
		0							
0e00c5	3rd dial tone detection frequency lower limits	7	3rd dial tone detection frequency lower limit (unit: 10 Hz, HEX)	-	0x00	0x00	0x00	XB	35
		6							
		5							
		4							
		3							
		2							
		1							
		0							
0e00c6	Busy tone detection frequency upper limits	7	Detection frequency upper limit (unit: 10 Hz, HEX)	-	0x31	0x39	0x00	XB	36
		6							
		5							
		4							
		3							
		2							
		1							

Address	Items	Bit No	Contents	Setting	Default			CSRC	
					Japan	North America	Europe	Command	Parameter
		0							
0e00c7	Busy tone detection frequency lower limits	7	Detection frequency lower limit (unit: 10 Hz, HEX)	-	0x1f	0x27	0x00	XB	37
		6							
		5							
		4							
		3							
		2							
		1							
		0							
0e00c8	Busy tone ON time max. value	7	Busy tone ON time max. value (unit: 20 ms, HEX)	-	0x1e	0x1e	0x00	XB	38
		6							
		5							
		4							
		3							
		2							
		1							
		0							
0e00c9	Busy tone ON time min. value	7	Busy tone ON time min. value (unit: 20 ms, HEX)	-	0x14	0x14	0x00	XB	39
		6							
		5							
		4							
		3							
		2							
		1							
		0							
0e00ca	Busy tone OFF time max. value	7	Busy tone OFF time max. value (unit: 20 ms, HEX)	-	0x1e	0x1e	0x00	XB	3A
		6							
		5							
		4							
		3							
		2							
		1							
		0							
0e00cb	Busy tone OFF time min. value	7	Busy tone OFF time min. value (unit: 20 ms, HEX)	-	0x14	0x14	0x00	XB	3B
		6							
		5							
		4							
		3							
		2							
		1							
		0							
0e00cc	Ringer detection frequency upper limits	7	Ringer detection frequency upper limit (unit: 1 Hz, HEX)	-	0x46	0x46	0x46	XB	3C
		6							
		5							
		4							
		3							
		2							
		1							
		0							
0e00cd	Ringer detection frequency lower limits	7	Ringer detection frequency lower limit (unit: 1 Hz, HEX)	-	0x0c	0x0c	0x0c	XB	3D
		6							
		5							
		4							
		3							
		2							
		1							

Address	Items	Bit No	Contents	Setting	Default			CSRC	
					Japan	North America	Europe	Command	Parameter
		0							
0e00ce	Ringer ON time max. value	7	Ringer ON time max. value (unit: 20 ms, HEX)	-	0x00	0x00	0x00	XB	3E
		6							
		5							
		4							
		3							
		2							
		1							
		0							
0e00cf	Ringer ON time min. value	7	Ringer ON time min. value (unit: 20 ms, HEX)	-	0x0a	0x0a	0x08	XB	3F
		6							
		5							
		4							
		3							
		2							
		1							
		0							

11.24.5 0e00d#

Address	Items	Bit No	Contents	Setting	Default			CSRC	
					Japan	North America	Europe	Command	Parameter
0e00d0	Ringer OFF time max. value	7	Ringer OFF time max. value (unit: 100 ms, HEX)	-	0x3c	0x3c	0x46	XB	40
		6							
		5							
		4							
		3							
		2							
		1							
		0							
0e00d1	Ringer OFF time max. value	7	Ringer OFF time min. value (unit: 100 ms, HEX)	Utility Mode Special Setting	0x02	0x00	0x00	XB	41
		6							
		5							
		4							
		3							
		2							
		1							
		0							
0e00d2	PB dial signal transmission time	7	PB dial signal transmission time (unit: 5 ms, HEX)	-	0x15	0x19	0x15	XB	42
		6							
		5							
		4							
		3							
		2							
		1							
		0							
0e00d3	PB dial inter digit pause	7	PB dial inter digit pause time (unit: 5 ms, HEX)	-	0x11	0x15	0x11	XB	43
		6							
		5							
		4							
		3							
		2							
		1							
		0							
0e00d4	10pps pulse dial break rate	7	10pps pulse dial break rate (%, HEX)	-	0x44	0x3d	0x3d	XB	44
		6							

Address	Items	Bit No	Contents	Setting	Default			CSRC	
					Japan	North America	Europe	Command	Parameter
		5							
		4							
		3							
		2							
		1							
		0							
0e00d5	10pps pulse dial inter digit pause	7	10pps pulse dial inter digit pause (unit: 10 ms, HEX)	-	0x68	0x68	0x5e	XB	45
		6							
		5							
		4							
		3							
		2							
		1							
		0							
0e00d6	20pps pulse dial break rate	7	20pps pulse dial brake rate (%, HEX)	-	0x44	0x3d	0x3d	XB	46
		6							
		5							
		4							
		3							
		2							
		1							
		0							
0e00d7	20pps pulse dial inter digit pause	7	20pps pulse dial inter digit pause (unit: 10 ms, HEX)	-	0x59	0x40	0x5c	XB	47
		6							
		5							
		4							
		3							
		2							
		1							
		0							
0e00d8	PB signal transmission level	7	PB signal transmission level (unit: 1 dBm, HEX)	Utility Mode Special Setting	0x0a	0x0a	0x06	XB	48
		6							
		5							
		4							
		3							
		2							
		1							
		0							
0e00d9	PB signal level difference (HL)	7	PB level difference (HL) (unit: 0.5 dBm, HEX)	Utility Mode Special Setting	0x04	0x04	0x04	XB	49
		6							
		5							
		4							
		3							
		2							
		1							
		0							
0e00da	DcLoop integration time when CML is set to OFF	7	DCLOOP integration time at CML relay OFF (unit: 5 ms, HEX) (Lower limit 20 ms)	-	0x50	0x50	0x50	XB	4A
		6							
		5							
		4							
		3							
		2							
		1							
		0							
0e00db	DcLoop integration time	7	DCLOOP integration time at CML relay ON (unit: 5 ms, HEX) (Lower limit 20 ms)	-	0x10	0x10	0x10	XB	4B
		6							

Address	Items	Bit No	Contents	Setting	Default			CSRC	
					Japan	North America	Europe	Command	Parameter
	when CML is set to ON	5							
		4							
		3							
		2							
		1							
		0							
0e00dc	Pause time	7		Utility Mode Special Setting (0-2)	0x01	0x01	0x01	XB	4C
		6							
		5							
		4							
		3							
		2	Pause time (unit: sec, HEX)						
		1							
		0							
0e00dd	DCLOOP check mode	7	DC-LOOP check 0: No 1: Always	Utility Mode Special Setting (6,7)	0x00	0x00	0x00	XB	4D
		6							
		5							
		4							
		3							
		2							
		1							
		0							
0e00de	DCLOOP waiting time	7	DCLOOP waiting time (unit: 100 ms, HEX)	-	0x00	0x00	0x00	XB	4E
		6							
		5							
		4							
		3							
		2							
		1							
		0							
0e00df	DCLOOP instantaneous shutdown allowed time (ph.A)	7	DCLOOP instantaneous shutdown allowable time (unit: 10 ms, HEX) (at the time of calling, CML ON to end of dialing)	-	0x00	0x00	0x00	XB	4F
		6							
		5							
		4							
		3							
		2							
		1							
		0							

11.24.6 0e00e#

Address	Items	Bit No	Contents	Setting	Default			CSRC	
					Japan	North America	Europe	Command	Parameter
0e00e0	DCLOOP instantaneous shutdown allowed time (ph.B)	7	DCLOOP instantaneous shutdown allowable time (unit: 10ms, HEX) (after completion of dialing and after CML ON at the time of reception)	-	0x00	0x00	0x00	XB	50
		6							
		5							
		4							
		3							
		2							
		1							
		0							
0e00e1	Dial mode RING DET mode	7		Utility Mode (0,1) Utility Mode	0x12	0x10	0x10	XB	51
		6							
		5	RING detection mode 01: No. of times						

Address	Items	Bit No	Contents	Setting	Default			CSRC	
					Japan	North America	Europe	Command	Parameter
		4	10: TIme	Special Setting (4,5)					
		3	Pulse format 00: General 01: SW 10: NO						
		2							
		1	Dialing method 00: PB 01: 10pps 10: 20pps 11: 16pps						
		0							
0e00e2	1st/2nd DT detection parameter	7		-	0x00	0x00	0x00	XB	52
		6							
		5							
		4							
		3	At 2nd DT detection DP dialing only						
		2							
		1							
		0	1st DT2 type						
0e00e3	Tone detection	7		Utility Mode Special Setting (4,5)	0x11	0x01	0x01	XB	53
		6							
		5	1300Hz 0: No 1: Yes						
		4	BusyTone 0: No 1: Yes Busy Tone detection is fixed to ON during TEL/FAX selection.						
		3	PBX DT 0: No 1: Yes						
		2	3rd DT 0: No 1: Yes						
		1	2nd DT 0: No 1: Yes						
		0	1st DT 0: No 1: Yes						
0e00e4	No. of busy tone detection	7	Busy tone detection frequency (HEX)	Utility Mode Special Setting	0x02	0x00	0x00	XB	54
		6							
		5							
		4							
		3							
		2							
		1							
		0							
0e00e5	No. of RING detection	7	Ring detection frequency (times, HEX)	Utility Mode	0x02	0x02	0x02	XB	55
		6							
		5							
		4							
		3							
		2							
		1							
		0							
0e00e6	RING detection time	7	Ring detection time (sec, HEX)	Utility Mode Special Setting	0x06	0x06	0x06	XB	56
		6							
		5							
		4							
		3							
		2							
		1							
		0							

Address	Items	Bit No	Contents	Setting	Default			CSRC	
					Japan	North America	Europe	Command	Parameter
0e00e7	Time to wait for a response from a remote station	7	Time waiting response from remote station after calling (unit: sec, HEX)	Utility Mode Special Setting	0x37	0x37	0x37	XB	57
		6							
		5							
		4							
		3							
		2							
		1							
		0							
0e00e8	Answering machine function	7	Answering machine CNG detection time (unit: 10sec, HEX) (1 - 7)	Utility Mode Special Setting (4)	0x64	0x64	0x64	XB	58
		6							
		5							
		4	Answer mode 0: OFF 1: ON						
		3	Answering machine DCLOOP detection time (unit: 5sec, HEX) (1 - 15)						
		2							
		1							
		0							
0e00e9 - 0e00ea	Remote reception password	7	ASCII [2]	Utility Mode	0x2a 0x20	0x2a 0x20	0x2a 0x20	XB	59 - 5A
		6							
		5							
		4							
		3							
		2							
		1							
		0							
0e00eb	RBT transmission time	7	RingBackTone signal transmission time (unit: 1000 ms, HEX)	-	0x14	0x14	0x14	XB	5B
		6							
		5							
		4							
		3							
		2							
		1							
		0							
0e00ec	CAR signal ON time max. value	7	CAR ON time max. value (unit: 20 ms, HEX)	-	0x28	0x00	0x00	XB	5C
		6							
		5							
		4							
		3							
		2							
		1							
		0							
0e00ed	CAR signal ON time min. value	7	CAR ON time min. value (unit: 20 ms, HEX)	-	0x0a	0x00	0x00	XB	5D
		6							
		5							
		4							
		3							
		2							
		1							
		0							
0e00ee	CAR signal OFF time max. value	7	CAR OFF time max. value (unit: 20 ms, HEX)	-	0x28	0x00	0x00	XB	5E
		6							
		5							
		4							
		3							
		2							
		1							

Address	Items	Bit No	Contents	Setting	Default			CSRC	
					Japan	North America	Europe	Command	Parameter
		0							
0e00ef	CAR signal OFF time min. value	7	CAR OFF time min. value (unit: 20 ms, HEX)	-	0x0a	0x00	0x00	XB	5F
		6							
		5							
		4							
		3							
		2							
		1							
		0							

11.24.7 0e00f#

Address	Items	Bit No	Contents	Setting	Default			CSRC	
					Japan	North America	Europe	Command	Parameter
0e00f0	CAR signal detection frequency	7	CAR (information receiving terminal start signal) detection frequency (times, HEX)	-	0x01	0x00	0x00	XB	60
		6							
		5							
		4							
		3							
		2							
		1							
		0							
0e00f1	Caller ID signal waiting time	7	ID waiting time after Caller ID/DIAL IN primary response (unit 1000 ms, HEX)	-	0x05	0x00	0x00	XB	61
		6							
		5							
		4							
		3							
		2							
		1							
		0							
0e00f2	Remote reception password entry waiting time	7	Password signal (DTMF) detection waiting time (unit: 100 ms, HEX)	-	0x14	0x14	0x14	XB	62
		6							
		5							
		4							
		3							
		2							
		1							
		0							
0e00f3	Normal/number display automatic line determination function	7	Automatic judgment function 0: OFF 1: ON	-	0x83	0x00	0x00	XB	63
		6							
		5							
		4							
		3	V23 signal detection waiting time when judged (x1 sec, HEX)						
		2							
		1							
		0							
0e00f4	Monitor speaker (Transmission signal sound)	7	PB tone monitoring at the time of off-hook	Utility Mode (0-6)	0x0a	0x0a	0x0a	XB	64
		6	Monitor speaker in communication 00: OFF 11: ON						
		5							
		4	Speaker volume (HEX)(0-1F)						
		3							
		2							
		1							

Address	Items	Bit No	Contents	Setting	Default			CSRC	
					Japan	North America	Europe	Command	Parameter
		0							
0e00f5 - 0e00ff	Numeric ID [20]	7	ASCII [20] When ID is less than 20 digits, justify to the left and insert space at the top (no NULL terminator).	Utility Mode	ALL 0x20	ALL 0x20	ALL 0x20	XB	65 – 6F
		6							
		5							
		4							
		3							
		2							
		1							
		0							

11.24.8 0e010#

Address	Items	Bit No	Contents	Setting	Default			CSRC	
					Japan	North America	Europe	Command	Parameter
0e0100 - 0e0108	Numeric ID [20]	7	ASCII [20] When ID is less than 20 digits, justify to the left and insert space at the top (no NULL terminator).	Utility Mode	ALL 0x20	ALL 0x20	ALL 0x20	XB	70 - 78
		6							
		5							
		4							
		3							
		2							
		1							
		0							
0e0109	PBX connection mode	7		Utility Mode (0-3)	0x0f	0x0f	0x0f	XB	79
		6							
		5							
		4							
		3	PBX call 0000 - 1001: keypad 1011: Reserved 1100: Reserved 1101: Reserved 1110: Reserved 1111: PBX unconnected						
		2							
		1							
		0							
0e010a	Protocol monitor	7		Utility Mode (5)	0x00	0x00	0x00	XB	7A
		6							
		5	TEL/FAX switching RBT monitor sound 0: OFF 1: ON						
		4	Inhibit the speaker to sound when off-hook key is pressed 1: Inhibit 0: Not inhibit						
		3							
		2							
		1							
		0							
0e010b	Reception function (disable)	7		Utility Mode (0-4)	0x3f	0x3f	0x3f	XB	7B
		6							
		5	Name display 0: Not inhibit 1: Inhibit						
		4	Compulsory Memory RX 0: Not inhibit 1: Inhibit						
		3	No. of caller / name display (number display / (display of subscribers for trace-back system)) 0: Not inhibit 1: Inhibit						
		2	Closed-area communication 0: Not inhibit 1: Inhibit						

Address	Items	Bit No	Contents	Setting	Default			CSRC	
					Japan	North America	Europe	Command	Parameter
		1	Remote RX 0: Not inhibit 1: Inhibit						
		0	DialIn 0: Not inhibit 1: Inhibit						
0e010c	PBX outside line access code 1 (BCD)	7	1st digit	Utility Mode	0xff	0xff	0xff	XB	7C
		6							
		5							
		4							
		3	2nd digit						
		2							
		1							
		0							
0e010d	PBX outside line access code 2 (BCD)	7	3rd digit	Utility Mode	0xff	0xff	0xff	XB	7D
		6							
		5							
		4							
		3	4th digit						
		2							
		1							
		0							
0e010e	Limit of long size reception	7		-	0x00	0x00	0x00	XB	7E
		6							
		5							
		4							
		3							
		2							
		1							
		0	Limit of long size reception 0: Limit 1: Unlimited						
0e010f	Max. size of long original received (In the case of 400 dpi or less)	7	When the resolution for reception is 400 dpi or less, the size of a long original received that is regarded as an error (The maximum size is a decimal value x 10 mm. 0 is regarded as 1000 mm.)	-	0x64	0x64	0x64	XB	7F
		6							
		5							
		4							
		3							
		2							
		1							
		0							

11.24.9 0e011#

Address	Items	Bit No	Contents	Setting	Default			CSRC	
					Japan	North America	Europe	Command	Parameter
0e0110	Max. size of long original received (In the case of 600 dpi or less)	7	When the resolution for reception is 600 dpi, the size of a long original received that is regarded as an error (The maximum length is a decimal value x 10 mm. 0 is regarded as 1000 mm.)	-	0x64	0x64	0x64	XB	80
		6							
		5							
		4							
		3							
		2							
		1							
		0							
0e0111	Voice response output level adjustment	7		-	0x0e	0x0e	0x0e	XB	81
		6							
		5							
		4							
		3	Voice response volume (HEX)						

Address	Items	Bit No	Contents	Setting	Default			CSRC	
					Japan	North America	Europe	Command	Parameter
		2	0000: min - 1111: max						
		1							
		0							
0e0112	Monitor speaker (Received signal sound)	7		Utility Mode (0-4)	0x14	0x14	0x14	XB	82
		6							
		5							
		4	Speaker volume (HEX) (0-1F)						
		3							
		2							
		1							
		0							
0e0113 - 0e011d	Reserved area	7		-	ALL 0x00	ALL 0x00	ALL 0x00	XB	83 - 8D
		6							
		5							
		4							
		3							
		2							
		1							
		0							
0e011e	External phone off hook determination threshold value	7	External phone off hook determination threshold value current (unit: 1 mA, HEX)	-	0x00	0x00	0x00	XB	8E
		6							
		5							
		4							
		3							
		2							
		1							
		0							

11.24.10 0f000#

Address	Items	Bit No	Contents	Setting	Default			CSRC	
					Japan	North America	Europe	Command	Parameter
0f0000	Reception main scan line resolution ability [0]	7	400dpi	-	0xaa	0xaa	0xaa	X2	00
		6	300dpi						
		5	200dpi						
		4							
		3	16pels/mm						
		2							
		1	8pels/mm						
		0							
0f0001	Reception main scan line resolution ability [0]	7		-	0x01	0x01	0x01	X2	01
		6							
		5							
		4							
		3							
		2	(1200dpi)						
		1	(800dpi)						
		0	600dpi						
0f0002	Reception sub scanning resolution ability [0]	7	400dpi	-	0xbb	0xbb	0xbb	X2	02
		6	300dpi						
		5	200dpi						
		4	100dpi						
		3	15.4 l/mm						
		2							
		1	7.7 l/mm						
		0	3.85 l/mm						

Address	Items	Bit No	Contents	Setting	Default			CSRC	
					Japan	North America	Europe	Command	Parameter
0f0003	Reception sub scanning resolution ability [1]	7		-	0x01	0x01	0x01	X2	03
		6							
		5							
		4							
		3							
		2	(1200dpi)						
		1	(800dpi)						
		0	600dpi						
0f0004	Reception coding method ability	7		-	0x1f	0x1f	0x1f	X2	04
		6							
		5	(JPEG)						
		4	JBIG						
		3	MMR						
		2	MR						
		1	MH						
		0	THRU						
0f0005	Received document width ability	7		-	0x0e	0x0e	0x0e	X2	05
		6							
		5	(Legal)						
		4	(Letter)						
		3	A3						
		2	B4						
		1	A4						
		0	(A5)						
0f0006	Received document length ability	7		-	0x46	0x46	0x46	X2	06
		6	Unlimited						
		5	(Legal)						
		4	(Letter)						
		3							
		2	B4						
		1	A4						
		0	(A5)						
0f0007	Reception speed ability [0]	7		-	0x1b	0x1b	0x1b	X2	07
		6							
		5							
		4	V.29-96						
		3	V.29-72						
		2							
		1	V.27-48						
		0	V.27-24						
0f0008	Reception speed ability [1]	7	V.17-144	-	0xfc	0xfc	0xfc	X2	08
		6	V.17-120						
		5	V.17-96						
		4	V.17-72						
		3	V.33-144						
		2	V.33-120						
		1	(TCM-96)						
		0	(TCM-72)						
0f0009	Reception speed ability [2]	7	V.34-192	-	0xff	0xff	0xff	X2	09
		6	V.34-168						
		5	V.34-144						
		4	V.34-120						
		3	V.34-96						
		2	V.34-72						
		1	V.34-48						
		0	V.34-24						

Address	Items	Bit No	Contents	Setting	Default			CSRC	
					Japan	North America	Europe	Command	Parameter
0f000a	Reception speed ability [3]	7		-	0x3f	0x3f	0x3f	X2	0A
		6							
		5	V.34-336						
		4	V.34-312						
		3	V.34-288						
		2	V.34-264						
		1	V.34-240						
		0	V.34-216						
0f000b	Reception MSLT ability	7	T3.85 or 200 x 100dpi (0-40) ms unit	-	0x05	0x05	0x05	X2	0B
		6							
		5							
		4							
		3							
		2							
		1							
		0							
0f000c	Reception MSLT ability	7	T7.7 or 200 x 200dpi (0-40) ms unit	-	0x05	0x05	0x05	X2	0C
		6							
		5							
		4							
		3							
		2							
		1							
		0							
0f000d	Reception MSLT ability	7	T11.55 or 300 x 300dpi (0-40) ms unit	-	0x05	0x05	0x05	X2	0D
		6							
		5							
		4							
		3							
		2							
		1							
		0							
0f000e	Reception MSLT ability	7	T15.4 or 400 x 400dpi or 600 x 600dpi (0-40) ms unit	-	0x05	0x05	0x05	X2	0E
		6							
		5							
		4							
		3							
		2							
		1							
		0							
0f000f	Reception ECM ability	7		-	0x01	0x01	0x01	X2	0F
		6							
		5							
		4							
		3							
		2							
		1							
		0	ECM reception capability 0: OFF 1: ON						

11.24.11 0f001#

Address	Items	Bit No	Contents	Setting	Default			CSRC	
					Japan	North America	Europe	Command	Parameter
0f0010	Reception protocol ability	7		-	0x39	0x39	0x39	X2	10
		6							

Address	Items	Bit No	Contents	Setting	Default			CSRC	
					Japan	North America	Europe	Command	Parameter
		5	FAX-CSRC						
		4	V8/V34						
		3	DIAG						
		2							
		1							
		0	G3S						
0f0011	Reception option frame ability	7		-	0x07	0x07	0x07	X2	11
		6							
		5							
		4	(BFT)						
		3	(BTM)						
		2	PWD						
		1	(SEP)						
		0	SUB						
0f0012 - 0f001f	Reserved area	7		-	ALL 0x00	ALL 0x00	ALL 0x00	X2	12 - 1F
		6							
		5							
		4							
		3							
		2							
		1							
		0							

11.24.12 10000#

Address	Items	Bit No	Contents	Setting	Default			CSRC	
					Japan	North America	Europe	Command	Parameter
100000	Transmission main scan line resolution instruction [0]	7	400dpi	-	0x22	0x22	0x22	X2	40
		6	300dpi						
		5	200dpi						
		4							
		3	16pels/mm						
		2							
		1	8pels/mm						
		0							
100001	Transmission main scan line resolution instruction [1]	7		-	0x01	0x01	0x01	X2	41
		6							
		5							
		4							
		3							
		2	(1200dpi)						
		1	(800dpi)						
		0	600dpi						
100002	Transmission sub scanning resolution instruction [0]	7	400dpi	-	0x11	0x11	0x11	X2	42
		6	300dpi						
		5	200dpi						
		4	100dpi						
		3	15.4 l/mm						
		2							
		1	7.7 l/mm						
		0	3.85 l/mm						
100003	Transmission sub scanning resolution instruction [1]	7		-	0x01	0x01	0x01	X2	43
		6							
		5							
		4							
		3							

Address	Items	Bit No	Contents	Setting	Default			CSRC	
					Japan	North America	Europe	Command	Parameter
		2	(1200dpi)						
		1	(800dpi)						
		0	600dpi						
100004	Transmission coding method instruction	7		-	0x1f	0x1f	0x1f	X2	44
		6							
		5	(JPEG)						
		4	JBIG						
		3	MMR						
		2	MR						
		1	MH						
		0	THRU						
100005	Transmission document width instruction	7		-	0x0e	0x0e	0x0e	X2	45
		6							
		5	(Legal)						
		4	(Letter)						
		3	A3						
		2	B4						
		1	A4						
		0	(A5)						
100006	Transmission document length instruction	7		-	0x46	0x46	0x46	X2	46
		6	Unlimited						
		5	(Legal)						
		4	(Letter)						
		3							
		2	B4						
		1	A4						
		0	(A5)						
100007	Transmission speed instruction [0]	7		-	0x1b	0x1b	0x1b	X2	47
		6							
		5							
		4	V.29-96						
		3	V.29-72						
		2							
		1	V.27-48						
		0	V.27-24						
100008	Transmission speed instruction [1]	7	V.17-144	-	0xf0	0xf0	0xf0	X2	48
		6	V.17-120						
		5	V.17-96						
		4	V.17-72						
		3	V.33-144						
		2	V.33-120						
		1	(TCM-96)						
		0	(TCM-72)						
100009	Transmission speed instruction [2]	7	V.34-192	-	0xff	0xff	0xff	X2	49
		6	V.34-168						
		5	V.34-144						
		4	V.34-120						
		3	V.34-96						
		2	V.34-72						
		1	V.34-48						
		0	V.34-24						
10000a	Transmission speed instruction [3]	7		-	0x3f	0x3f	0x3f	X2	4A
		6							
		5	V.34-336						
		4	V.34-312						
		3	V.34-288						

Address	Items	Bit No	Contents	Setting	Default			CSRC	
					Japan	North America	Europe	Command	Parameter
		2	V.34-264						
		1	V.34-240						
		0	V.34-216						
10000b	Transmission MSLT instruction	7	T3.85 or 200 x 100dpi (0-40) ms unit	-	0x05	0x05	0x05	X2	4B
		6							
		5							
		4							
		3							
		2							
		1							
		0							
10000c	Transmission MSLT instruction	7	T7.7 or 200 x 200dpi (0-40) ms unit	-	0x05	0x05	0x05	X2	4C
		6							
		5							
		4							
		3							
		2							
		1							
		0							
10000d	Transmission MSLT instruction	7	T11.55 or 300 x 300dpi (0-40) ms unit	-	0x05	0x05	0x05	X2	4D
		6							
		5							
		4							
		3							
		2							
		1							
		0							
10000e	Transmission MSLT instruction	7	T15.4 or 400 x 400dpi or 600 x 600dpi (0-40) ms unit	-	0x05	0x05	0x05	X2	4E
		6							
		5							
		4							
		3							
		2							
		1							
		0							
10000f	Transmission ECM instruction	7		-	0x01	0x01	0x01	X2	4F
		6							
		5							
		4							
		3							
		2							
		1	ECM transmission frame size 0: 256 1: 64						
		0	ECM transmission instruction 0: OFF 1: ON						

11.24.13 10001#

Address	Items	Bit No	Contents	Setting	Default			CSRC	
					Japan	North America	Europe	Command	Parameter
100010	Transmission protocol instruction	7		-	0x11	0x11	0x11	X2	50
		6							
		5	FAX-CSRC						
		4	V8/V34						
		3	DIAG						

Address	Items	Bit No	Contents	Setting	Default			CSRC	
					Japan	North America	Europe	Command	Parameter
		2							
		1							
		0	G3S						
100011	Transmission option frame instruction	7		-	0x00	0x00	0x00	X2	51
		6							
		5							
		4	(BFT)						
		3	(BTM)						
		2	PWD						
		1	(SEP)						
		0	SUB						
100012 - 10001f	Reserved area	7		-	ALL 0x00	ALL 0x00	ALL 0x00	X2	52 - 5F
		6							
		5							
		4							
		3							
		2							
		1							
		0							

11.25 FAX setting (Address parameter list: for line 2)

11.25.1 0e01a#

Address	Items	Bit No	Contents	Setting	Default			CSRC	
					Japan	North America	Europe	Command	Parameter
0e01a0	Transmission ATT	7	Tone signal/FSK transmission ATT (HEX) 1 dBm every (0 to -15dBm)	Utility Mode Special Setting	0xaa	0xaa	0xaa	XC	00
		6							
		5							
		4							
		3	High-speed signal transmission ATT (HEX) 1 dBm every (0 to -15dBm)						
		2							
		1							
		0							
0e01a1	CED Transmission ATT	7		Utility Mode Special Setting (0-3)	0x0a	0x0a	0x0a	XC	01
		6							
		5							
		4							
		3	CED/ANS transmission ATT (HEX) 1 dBm every (0 to -15dBm)						
		2							
		1							
		0							
0e01a2	CD/SED ON level	7		Utility Mode Special Setting (0,1)	0x03	0x03	0x03	XC	02
		6							
		5							
		4							
		3							
		2							
		1	CD/SED ON level [dBm] 00: -33, 01: -38, 10: -43, 11: -48						
		0							
0e01a3	Transmission cable amplitude EQL	7		Utility Mode Special Setting (4,5)	0x00	0x00	0x00	XC	03
		6							
		5	Transmission cable EQL0 00: 0dB, 01: 4dB, 10: 8dB, 11: 12dB						
		4							
		3							
		2							
		1							

Address	Items	Bit No	Contents	Setting	Default			CSRC	
					Japan	North America	Europe	Command	Parameter
		0							
0e01a4	Reception cable amplitude EQL	7		Utility Mode Special Setting (4,5)	0x00	0x00	0x00	XC	04
		6							
		5	Reception cable EQL 00: 0dB, 01: 4dB, 10: 8dB, 11: 12dB						
		4							
		3							
		2							
		1							
		0							
0e01a5	TEL/FAX switching	7	Time from vocal response to RBT transmission (CNG detection waiting time 2) 0: 4 sec. 1: 2 sec.	Utility Mode Special Setting (4,5)	0x00	0x00	0x00	XC	05
		6	Time from reception to voice response transmission (CNG detection waiting time 1) 0: 2 sec. 1: 4 sec.						
		5	TEL/FAX switching mode 0: Disabled 1: Enabled						
		4	External telephone no ringing setting 0: Disabled 1: Enabled (disconnected)						
		3	TEL/FAX switching ON response details 0: Voice response + RBT transmission 1: RBT transmission only						
		2							
		1							
		0							
0e01a6	Ring Back Tone parameter	7	RBT form 000: No, 001: Japan, 010: US, 011: UK, 100: Germany, 101 - 111: Others	Utility Mode Special Setting (0-3,5-7)	0x00	0x00	0x00	XC	06
		6							
		5							
		4	CED transmitted upon TEL/FAX switching						
		3	RBT transmission level (HEX) 0 to -15 dBm						
		2							
		1							
		0							
0e01a7	Operated in international mode	7	DIS waiting frequency 0: Always once, 1: Twice in overseas communication	Utility Mode Special Setting (6,7)	0x40	0x40	0x40	XC	07
		6	Overseas communication 0: No, 1: Yes						
		5							
		4							
		3							
		2							
		1							
		0							
0e01a8	Starting speed in international mode (V29 modem)	7		Utility Mode Special Setting (0,1,3,4)	0x02	0x02	0x02	XC	08
		6							
		5							
		4	9600/V.29bps						
		3	7200/V.29bps						
		2							
		1	4800/V.27bps						
		0	2400/V.27bps						

Address	Items	Bit No	Contents	Setting	Default			CSRC	
					Japan	North America	Europe	Command	Parameter
0e01a9	Starting speed in international mode (V17 or V33 modem)	7	14400bps/V.17	Utility Mode Special Setting (4-7)	0x10	0x10	0x10	XC	09
		6	12000bps/V.17						
		5	9600bps/V.17						
		4	7200bps/V.17						
		3							
		2							
		1							
		0							
0e01aa	Starting speed in international mode (V34)	7	33600bps/V.34	Utility Mode Special Setting	0x20	0x20	0x20	XC	0A
		6	31200bps/V.34						
		5	28800bps/V.34						
		4	26400bps/V.34						
		3	24000bps/V.34						
		2	21600bps/V.34						
		1	19200bps/V.34						
		0	16800bps/V.34						
0e01ab	CD OFF timer	7	CD OFF timer (unit: 100 ms, HEX)	-	0x14	0x14	0x14	XC	0B
		6							
		5							
		4							
		3							
		2							
		1							
		0							
0e01ac	CD ON integration time	7	CD ON integration time (unit: 100 ms, HEX)	-	0x06	0x06	0x06	XC	0C
		6							
		5							
		4							
		3							
		2							
		1							
		0							
0e01ad	Symbol speed maximum allowable value	7	V34 control ch data rate 0: 1200, 1: 2400	Utility Mode Special Setting (0-3,7)	0x05	0x05	0x05	XC	0D
		6							
		5							
		4							
		3	Max. allowable symbol speed 0000: 2400, 0001: Reserved, 0010: 2800 0011: 3000, 0100: 3200, 0101: 3429						
		2							
		1							
		0							
0e01ae	Symbol rate selection criteria	7	Attenuation distortion property (-6dB to +6dB) 0000:-6, 0001:-5, 0010:-4, 0011:-3, 0100:-2, 0101:-1, 0110:0, 0111:+1, 1000:+2, 1001:+3, 1010:+4, 1011:+5, 1100:+6	Utility Mode Special Setting	0x66	0x66	0x66	XC	0E
		6							
		5							
		4							
		3	Band end S/N (-6dB to +6dB) 0000:-6, 0001:-5, 0010:-4, 0011:-3, 0100:-2, 0101:-1, 0110:0, 0111:+1, 1000:+2, 1001:+3, 1010:+4, 1011:+5, 1100:+6						
		2							
		1							
		0							
0e01af	Primary channel data rate selection criteria	7	V.34 reception gain correction (-4.0dB to +3.5dB) 0000:0, 0001:+0.5, 0010:+1.0, 0011:+1.5, 0100:+2.0, 0101:+2.5, 0110:+3.0, 0111:+3.5, 1000:-4.0, 1001:-3.5, 1010:-3.0, 1011:-2.5, 1100:-2.0, 1101:-1.5, 1110:-1.0, 1111:-0.5	Utility Mode Special Setting (0-3)	0x08	0x08	0x08	XC	0F
		6							
		5							
		4							

Address	Items	Bit No	Contents	Setting	Default			CSRC	
					Japan	North America	Europe	Command	Parameter
		3	Primary channel data rate selection criteria (-8dB to +7dB) 0000:-8, 0001:-7, 0010:-6, 0011:-5, 0100:-4, 0101:-3, 0110:-2, 0111:-1, 1000:0, 1001:+1, 1010:+2, 1011:+3, 1100:+4, 1101:+5, 1110:+6, 1111:+7						
		2							
		1							
		0							

11.25.2 0e01b#

Address	Items	Bit No	Contents	Setting	Default			CSRC	
					Japan	North America	Europe	Command	Parameter
0e01b0	V34 primary channel fall back	7	No. of fall back frame errors (Hex)	-	0x03	0x03	0x03	XC	10
		6							
		5							
		4							
		3							
		2							
		1							
		0							
0e01b1	V34 control channel fall back	7	Fall back EQMVAL value (HEX)	-	0x40	0x40	0x40	XC	11
		6							
		5							
		4							
		3							
		2							
		1							
		0							
0e01b2	V34 OFF reception - V34 OFF time after error	7	Timer value after V34 reception error to reset the V34 OFF reception (min., HEX) (Enabled only when the transmission side cannot be specified)	-	0x0a	0x0a	0x0a	XC	12
		6							
		5							
		4							
		3							
		2							
		1							
		0							
0e01b3	V34 OFF reception - No. of successful consecutive V17 reception times to reset V34 OFF	7	No. of successful consecutive V17 reception times to reset V34 OFF reception after V34 reception error (No. of times, HEX) (Enabled only when the transmission side can be specified with Caller ID)	-	0x0a	0x0a	0x0a	XC	13
		6							
		5							
		4							
		3							
		2							
		1							
		0							
0e01b4	V34 OFF reception - Function switch (disabled)	7	V34 OFF function at manual reception 0: Enabled, 1: Disabled	-	0x00	0x02	0x02	XC	14
		6							
		5							
		4							
		3							
		2							
		1	V.34 OFF reset mode = No. of successful consecutive V.17 reception times (ID specified) 0: Enabled, 1: Disabled						

Address	Items	Bit No	Contents	Setting	Default			CSRC	
					Japan	North America	Europe	Command	Parameter
		0	V.34 OFF reset mode = time (ID cannot be specified) 0: Enabled, 1: Disabled						
0e01b5	JBIG parameter	7		-	0x01	0x01	0x01	XC	15
		6							
		5							
		4							
		3							
		2							
		1	Use of following FP JBIG option LO size at reduction 0: No, 1: Yes						
		0	JBIG optional L0 capacity 0: No, 1: Yes						
0e01b6 - 0e01b9	JBIG L0 size	7	JBIG optional LO size used for reduction (hex) (setting rangeF0x01 - 0xffffffff) [0] = HH, [1] = HL, [2] = LH, [3] = LL	-	0x00 0x00 0x00 0x80	0x00 0x00 0x00 0x80	0x00 0x00 0x00 0x80	XC	16 - 19
		6							
		5							
		4							
		3							
		2							
		1							
		0							
0e01ba	JBIG OFF reception - Function switch (disabled)	7		-	0x00	0x00	0x00	XC	1A
		6							
		5							
		4							
		3							
		2							
		1	JBIG OFF function at A3 high-definition reception (DIS re-transmission) 0: OFF, 1: ON						
		0	JBIG OFF function after JBIG reception error 0: Enabled, 1: Disabled						
0e01bb	JBIG OFF reception - JBIG OFF time after error	7	Timer value after JBIG reception error to reset JBIG OFF reception (min., HEX) (10 min. in case of 0)	-	0x0a	0x0a	0x0a	XC	1B
		6							
		5							
		4							
		3							
		2							
		1							
		0							
0e01bc	PBX dial tone detection frequency upper limit	7	PBX dial tone detection frequency upper limit (unit: 10 Hz, HEX)	-	0x31	0x00	0x00	XC	1C
		6							
		5							
		4							
		3							
		2							
		1							
		0							
0e01bd	PBX dial tone detection frequency lower limit	7	PBX dial tone detection frequency lower limit (unit: 10 Hz, HEX)	-	0x1f	0x00	0x00	XC	1D
		6							
		5							
		4							
		3							
		2							

Address	Items	Bit No	Contents	Setting	Default			CSRC	
					Japan	North America	Europe	Command	Parameter
		1							
		0							
0e01be	PBX dial tone detection time	7	PBX dial tone detection time or max. ON time value (unit: 20 ms, HEX)	-	0x32	0x00	0x00	XC	1E
		6							
		5							
		4							
		3							
		2							
		1							
		0							
0e01bf	PBX dial tone ON time min. value	7	PBX dial tone ON time min. value (unit: 20 ms, HEX)	-	0x00	0x00	0x00	XC	1F
		6							
		5							
		4							
		3							
		2							
		1							
		0							

11.25.3 0e01c#

Address	Items	Bit No	Contents	Setting	Default			CSRC	
					Japan	North America	Europe	Command	Parameter
0e01c0	PBX dial tone OFF time max. value	7	PBX dial tone OFF time max. value (unit: 20 ms, HEX)	-	0x00	0x00	0x00	XC	20
		6							
		5							
		4							
		3							
		2							
		1							
		0							
0e01c1	PBX dial tone OFF time min. value	7	PBX dial tone OFF time min. value (unit: 20 ms, HEX)	-	0x00	0x00	0x00	XC	21
		6							
		5							
		4							
		3							
		2							
		1							
		0							
0e01c2	PBX dial tone waiting time	7	PBX dial tone waiting time or pre-pause time (unit: 1 sec, HEX)	-	0x03	0x03	0x03	XC	22
		6							
		5							
		4							
		3							
		2							
		1							
		0							
0e01c3	PBX dial tone instantaneous break detection time	7	Instantaneous break detection time (unit: 20 ms, HEX) or tone detection frequency (times, HEX)	-	0x00	0x00	0x00	XC	23
		6							
		5							
		4							
		3							
		2							
		1							
		0							
0e01c4	1st dial tone detection	7	1st dial tone detection frequency upper limit (unit: 10 Hz, HEX)	-	0x31	0x35	0x34	XC	24

Address	Items	Bit No	Contents	Setting	Default			CSRC	
					Japan	North America	Europe	Command	Parameter
	frequency upper limit	6							
		5							
		4							
		3							
		2							
		1							
		0							
0e01c5	1st dial tone detection frequency lower limit	7	1st dial tone detection frequency lower limit (unit: 10 Hz, HEX)	-	0x1f	0x23	0x1c	XC	25
		6							
		5							
		4							
		3							
		2							
		1							
		0							
0e01c6	1st dial tone detection time	7	1st dial tone detection time or max. ON time value (unit: 20 ms, HEX)	-	0x32	0x32	0x1a	XC	26
		6							
		5							
		4							
		3							
		2							
		1							
		0							
0e01c7	1st dial tone ON time min. value	7	1st dial tone ON time min. value (unit: 20 ms, HEX)	-	0x00	0x00	0x00	XC	27
		6							
		5							
		4							
		3							
		2							
		1							
		0							
0e01c8	1st dial tone OFF time max. value	7	1st dial tone OFF time max. value (unit: 20 ms, HEX)	-	0x00	0x00	0x00	XC	28
		6							
		5							
		4							
		3							
		2							
		1							
		0							
0e01c9	1st dial tone OFF time min. value	7	1st dial tone OFF time min. value (unit: 20 ms, HEX)	-	0x00	0x00	0x00	XC	29
		6							
		5							
		4							
		3							
		2							
		1							
		0							
0e01ca	1st dial tone waiting time	7	1st dial tone waiting time or pre-pause time (unit: 1 sec, HEX)	-	0x03	0x03	0x04	XC	2A
		6							
		5							
		4							
		3							
		2							
		1							
		0							
0e01cb	1st dial tone instantaneous	7	Instantaneous break detection time (unit: 20 ms, HEX) or tone detection frequency (times, HEX)	-	0x00	0x00	0x05	XC	2B

Address	Items	Bit No	Contents	Setting	Default			CSRC	
					Japan	North America	Europe	Command	Parameter
	break detection time	6							
		5							
		4							
		3							
		2							
		1							
		0							
0e01cc	2nd dial tone detection frequency upper limit	7	2nd dial tone detection frequency upper limit (unit: 10 Hz, HEX)	-	0x31	0x00	0x00	XC	2C
		6							
		5							
		4							
		3							
		2							
		1							
		0							
0e01cd	2nd dial tone detection frequency lower limit	7	2nd dial tone detection frequency lower limit (unit: 10 Hz, HEX)	-	0x1f	0x00	0x00	XC	2D
		6							
		5							
		4							
		3							
		2							
		1							
		0							
0e01ce	2nd dial tone detection time	7	2nd dial tone detection time or max. ON time value (unit: 20 ms, HEX)	-	0x08	0x00	0x00	XC	2E
		6							
		5							
		4							
		3							
		2							
		1							
		0							
0e01cf	2nd dial tone ON time min. value	7	2nd dial tone ON time min. value (unit: 20 ms, HEX)	-	0x02	0x00	0x00	XC	2F
		6							
		5							
		4							
		3							
		2							
		1							
		0							

11.25.4 0e01d#

Address	Items	Bit No	Contents	Setting	Default			CSRC	
					Japan	North America	Europe	Command	Parameter
0e01d0	2nd dial tone OFF time max. value	7	2nd dial tone OFF time max. value (unit: 20 ms, HEX)	-	0x0a	0x00	0x00	XC	30
		6							
		5							
		4							
		3							
		2							
		1							
		0							
0e01d1	2nd dial tone OFF time min. value	7	2nd dial tone OFF time min. value (unit: 20 ms, HEX)	-	0x04	0x00	0x00	XC	31
		6							
		5							
		4							

Address	Items	Bit No	Contents	Setting	Default			CSRC	
					Japan	North America	Europe	Command	Parameter
		3							
		2							
		1							
		0							
0e01d2	2nd dial tone waiting time	7	2nd dial tone waiting time or pre-pause time (unit: 1 sec, HEX)	-	0x03	0x03	0x03	XC	32
		6							
		5							
		4							
		3							
		2							
		1							
		0							
0e01d3	2nd dial tone instantaneous break detection time	7	Instantaneous break detection time (unit: 20 ms, HEX) or tone detection frequency (times, HEX)	-	0x03	0x00	0x00	XC	33
		6							
		5							
		4							
		3							
		2							
		1							
		0							
0e01d4	3rd dial tone detection frequency upper limit	7	3rd dial tone detection frequency upper limit (unit: 10 Hz, HEX)	-	0x00	0x00	0x00	XC	34
		6							
		5							
		4							
		3							
		2							
		1							
		0							
0e01d5	3rd dial tone detection frequency lower limit	7	3rd dial tone detection frequency lower limit (unit: 10 Hz, HEX)	-	0x00	0x00	0x00	XC	35
		6							
		5							
		4							
		3							
		2							
		1							
		0							
0e01d6	Busy tone detection frequency upper limit	7	Detection frequency upper limit (unit: 10 Hz, HEX)	-	0x31	0x00	0x00	XC	36
		6							
		5							
		4							
		3							
		2							
		1							
		0							
0e01d7	Busy tone detection frequency lower limit	7	Detection frequency lower limit (unit: 10 Hz, HEX)	-	0x1f	0x00	0x00	XC	37
		6							
		5							
		4							
		3							
		2							
		1							
		0							
0e01d8	Busy tone ON time max. value	7	Busy tone ON time max. value (unit: 20 ms, HEX)	-	0x1e	0x00	0x00	XC	38
		6							
		5							
		4							

Address	Items	Bit No	Contents	Setting	Default			CSRC	
					Japan	North America	Europe	Command	Parameter
		3							
		2							
		1							
		0							
0e01d9	Busy tone ON time min. value	7	Busy tone ON time min. value (unit: 20 ms, HEX)	-	0x14	0x00	0x00	XC	39
		6							
		5							
		4							
		3							
		2							
		1							
		0							
0e01da	Busy tone OFF time max. value	7	Busy tone OFF time max. value (unit: 20 ms, HEX)	-	0x1e	0x00	0x00	XC	3A
		6							
		5							
		4							
		3							
		2							
		1							
		0							
0e01db	Busy tone OFF time min. value	7	Busy tone OFF time min. value (unit: 20 ms, HEX)	-	0x14	0x00	0x00	XC	3B
		6							
		5							
		4							
		3							
		2							
		1							
		0							
0e01dc	Ringer detection frequency upper limit	7	Ringer detection frequency upper limit (unit: 1 Hz, HEX)	-	0x46	0x46	0x46	XC	3C
		6							
		5							
		4							
		3							
		2							
		1							
		0							
0e01dd	Ringer detection frequency lower limit	7	Ringer detection frequency lower limit (unit: 1 Hz, HEX)	-	0x0c	0x0c	0x0c	XC	3D
		6							
		5							
		4							
		3							
		2							
		1							
		0							
0e01de	Ringer ON time max. value	7	Ringer ON time max. value (unit: 20 ms, HEX)	-	0x00	0x00	0x00	XC	3E
		6							
		5							
		4							
		3							
		2							
		1							
		0							
0e01df	Ringer ON time min. value	7	Ringer ON time min. value (unit: 20 ms, HEX)	-	0x0a	0x0a	0x08	XC	3F
		6							
		5							
		4							

Address	Items	Bit No	Contents	Setting	Default			CSRC	
					Japan	North America	Europe	Command	Parameter
		3							
		2							
		1							
		0							

11.25.5 0e01e#

Address	Items	Bit No	Contents	Setting	Default			CSRC	
					Japan	North America	Europe	Command	Parameter
0e01e0	Ringer OFF time max. value	7	Ringer OFF time max. value (unit: 100 ms, HEX)	-	0x3c	0x3c	0x46	XC	40
		6							
		5							
		4							
		3							
		2							
		1							
		0							
0e01e1	Ringer OFF time min. value	7	Ringer OFF time min. value (unit: 100 ms, HEX)	Utility Mode Special Setting	0x02	0x00	0x00	XC	41
		6							
		5							
		4							
		3							
		2							
		1							
		0							
0e01e2	PB dial signal transmission time	7	PB dial signal transmission time (unit: 5 ms, HEX)	-	0x15	0x19	0x15	XC	42
		6							
		5							
		4							
		3							
		2							
		1							
		0							
0e01e3	PB dial inter-digit pause	7	PB dial inter-digit pause time (unit: 5 ms, HEX)	-	0x11	0x15	0x11	XC	43
		6							
		5							
		4							
		3							
		2							
		1							
		0							
0e01e4	10 pps pulse dial break rate	7	10 pps pulse dial break rate (%, HEX)	-	0x44	0x3d	0x3d	XC	44
		6							
		5							
		4							
		3							
		2							
		1							
		0							
0e01e5	10 pps pulse dial inter-digit pause	7	10 pps pulse dial inter digit pause (unit: 10 ms, HEX)	-	0x68	0x68	0x5e	XC	45
		6							
		5							
		4							
		3							
		2							
		1							

Address	Items	Bit No	Contents	Setting	Default			CSRC	
					Japan	North America	Europe	Command	Parameter
		0							
0e01e6	20 pps pulse dial break rate	7	20 pps pulse dial break rate (%, HEX)	-	0x44	0x3d	0x3d	XC	46
		6							
		5							
		4							
		3							
		2							
		1							
		0							
0e01e7	20 pps pulse dial inter-digit pause	7	20 pps pulse dial inter-digit pause (unit: 10 ms, HEX)	-	0x59	0x40	0x5c	XC	47
		6							
		5							
		4							
		3							
		2							
		1							
		0							
0e01e8	PB signal transmission level	7	PB signal transmission level (unit: 1 dBm, HEX)	Utility Mode Special Setting	0x0a	0x0a	0x06	XC	48
		6							
		5							
		4							
		3							
		2							
		1							
		0							
0e01e9	PB signal level difference (HL)	7	PB signal level difference (HL) (unit: 0.5 dBm, HEX)	Utility Mode Special Setting	0x04	0x04	0x04	XC	49
		6							
		5							
		4							
		3							
		2							
		1							
		0							
0e01ea	DCLOOP integration time at CML OFF	7	DCLOOP integration time at CML relay OFF (unit: 5 ms, HEX) (Lower limit 20 ms)	-	0x50	0x50	0x50	XC	4A
		6							
		5							
		4							
		3							
		2							
		1							
		0							
0e01eb	DCLOOP integration time at CML ON	7	DCLOOP integration time at CML relay ON (unit: 5 ms, HEX) (Lower limit 20 ms)	-	0x10	0x10	0x10	XC	4B
		6							
		5							
		4							
		3							
		2							
		1							
		0							
0e01ec	Pause time	7		Utility Mode Special Setting (0-2)	0x01	0x01	0x01	XC	4C
		6							
		5							
		4							
		3							
		2	Pause time (unit:sec, HEX)						
		1							

Address	Items	Bit No	Contents	Setting	Default			CSRC	
					Japan	North America	Europe	Command	Parameter
		0							
0e01ed	DC-LOOP check mode	7	DC-LOOP check 0: No, 1: Always	Utility Mode Special Setting (6,7)	0x00	0x00	0x00	XC	4D
		6							
		5							
		4							
		3							
		2							
		1							
		0							
0e01ee	DC-LOOP waiting time	7	DC-LOOP waiting time (unit: 100 ms, HEX)	-	0x00	0x00	0x00	XC	4E
		6							
		5							
		4							
		3							
		2							
		1							
		0							
0e01ef	DC-LOOP instantaneous break allowable time (ph.A)	7	DC-LOOP instantaneous break allowable time (unit: 10 ms, HEX) (at the time of calling, CML ON to end of dialing)	-	0x00	0x00	0x00	XC	4F
		6							
		5							
		4							
		3							
		2							
		1							
		0							

11.25.6 0e01f#

Address	Items	Bit No	Contents	Setting	Default			CSRC	
					Japan	North America	Europe	Command	Parameter
0e01f0	DC-LOOP instantaneous break allowable time (ph.B)	7	DC-LOOP instantaneous break allowable time (unit: 10ms, HEX) (after completion of dialing and after CML ON at the time of reception)	-	0x00	0x00	0x00	XC	50
		6							
		5							
		4							
		3							
		2							
		1							
		0							
0e01f1	Dial mode RING DET mode	7		Utility Mode (0,1) Utility Mode Special Setting (4,5)	0x12	0x10	0x10	XC	51
		6							
		5	RING detection mode 01: No. of times, 10: Time						
		4							
		3	Pulse format 00: General, 01: SW, 10: NO						
		2							
		1	Dialing method 00: PB, 01: 10pps, 10: 20pps, 11: 16pps						
		0							
0e01f2	1st/2nd DT detection parameter	7		-	0x00	0x00	0x00	XC	52
		6							
		5							
		4							
		3	At 2nd DT detection DP dialing only						
		2							
		1							
		0	1st DT2 type						

Address	Items	Bit No	Contents	Setting	Default			CSRC	
					Japan	North America	Europe	Command	Parameter
0e01f3	Tone detection	7		Utility Mode Special Setting (4,5)	0x11	0x01	0x01	XC	53
		6							
		5	1300Hz 0: No, 1: Yes						
		4	BusyTone 0: No, 1: Yes						
		3	PBX DT 0: No, 1: Yes						
		2	3rd Dt 0: No, 1: Yes						
		1	2nd DT 0: No, 1: Yes						
		0	1st DT 0: No, 1: Yes						
0e01f4	No. of busy tone detection times	7	No. of busy tone detection times (HEX)	Utility Mode Special Setting	0x02	0x00	0x00	XC	54
		6							
		5							
		4							
		3							
		2							
		1							
		0							
0e01f5	No. of RING detection times	7	No. of RING detection times (times, HEX)	Utility Mode	0x02	0x02	0x02	XC	55
		6							
		5							
		4							
		3							
		2							
		1							
		0							
0e01f6	RING detection time	7	Ring detection time (sec, HEX)	Utility Mode Special Setting	0x06	0x06	0x06	XC	56
		6							
		5							
		4							
		3							
		2							
		1							
		0							
0e01f7	Remote station response waiting time	7	Remote station response waiting time at calling (unit:sec, HEX)	Utility Mode Special Setting	0x37	0x37	0x37	XC	57
		6							
		5							
		4							
		3							
		2							
		1							
		0							
0e01f8	Answering machine function	7	Answering machine CNG detection time (unit: 10 sec, HEX) (1-7)	Utility Mode Special Setting (4)	0x64	0x64	0x64	XC	58
		6							
		5							
		4	Answer mode 0: OFF, 1: ON						

Address	Items	Bit No	Contents	Setting	Default			CSRC	
					Japan	North America	Europe	Command	Parameter
		3	Answering machine DC-LOOP detection time (unit: 5 sec, HEX) (1-15)						
		2							
		1							
		0							
0e01f9 - 0e01fa	Remote reception password	7	ASCII[2]	Utility Mode	0x2a 0x20	0x2a 0x20	0x2a 0x20	XC	59 - 5A
		6							
		5							
		4							
		3							
		2							
		1							
		0							
0e01fb	RBT transmission time	7	RingBackTone signal transmission time (unit: 1000 ms, HEX)	-	0x14	0x14	0x14	XC	5B
		6							
		5							
		4							
		3							
		2							
		1							
		0							
0e01fc	CAR signal ON time max. value	7	CAR ON time max. value (unit: 20 ms, HEX)	-	0x28	0x00	0x00	XC	5C
		6							
		5							
		4							
		3							
		2							
		1							
		0							
0e01fd	CAR signal ON time min. value	7	CAR ON time min. value (unit: 20 ms, HEX)	-	0x0a	0x00	0x00	XC	5D
		6							
		5							
		4							
		3							
		2							
		1							
		0							
0e01fe	CAR signal OFF time max. value	7	CAR OFF time max. value (unit: 20 ms, HEX)	-	0x28	0x00	0x00	XC	5E
		6							
		5							
		4							
		3							
		2							
		1							
		0							
0e01ff	CAR signal OFF time min. value	7	CAR OFF time min. value (unit: 20 ms, HEX)	-	0x0a	0x00	0x00	XC	5F
		6							
		5							
		4							
		3							
		2							
		1							
		0							

11.25.7 0e020#

Address	Items	Bit No	Contents	Setting	Default			CSRC	
					Japan	North America	Europe	Command	Parameter
0e0200	No. of CAR signal detection times	7	No. of CAR (information reception terminal start signal) detection times (times, HEX)	-	0x01	0x00	0x00	XC	60
		6							
		5							
		4							
		3							
		2							
		1							
		0							
0e0201	Caller ID signal waiting time	7	ID waiting time after Caller ID/DIAL IN primary response (unit 1000 ms, HEX)	-	0x05	0x00	0x00	XC	61
		6							
		5							
		4							
		3							
		2							
		1							
		0							
0e0202	Remote reception password entry waiting time	7	Password signal (DTMF) detection waiting time (unit: 100 ms, HEX)	-	0x14	0x14	0x14	XC	62
		6							
		5							
		4							
		3							
		2							
		1							
		0							
0e0203	Normal/number display automatic line distinction function	7	Automatic distinction function 0: OFF 1: ON	-	0x83	0x00	0x00	XC	63
		6							
		5							
		4							
		3	V23 signal detection waiting time when distinguished (x1 sec, HEX)						
		2							
		1							
		0							
0e0204	Monitor speaker (Transmission signal sound)	7	PB tone monitor at off-hook	Utility Mode (0-6)	0x10	0x10	0x10	XC	64
		6	Monitor speaker in communication 00: OFF 11: ON						
		5							
		4	Speaker volume (HEX) (0-1F)						
		3							
		2							
		1							
		0							
0e0205 - 0e020f	Numeric ID [20]	7	ASCII [20] When ID is less than 20 digits, left-justify and insert a space at the head. (No NULL terminator)	Utility Mode	ALL 0x20	ALL 0x20	ALL 0x20	XC	65 - 6F
		6							
		5							
		4							
		3							
		2							
		1							
		0							

11.25.8 0e021#

Address	Items	Bit No	Contents	Setting	Default			CSRC	
					Japan	North America	Europe	Command	Parameter
0e0210 - 0e0218	Numeric ID [20]	7	ASCII [20] When ID is less than 20 digits, left-justify and insert a space at the head. (No NULL terminator)	Utility Mode	ALL 0x20	ALL 0x20	ALL 0x20	XC	70 - 78
		6							
		5							
		4							
		3							
		2							
		1							
		0							
0e0219	PBX connection mode	7		Utility Mode (0-3)	0x0f	0x0f	0x0f	XC	79
		6							
		5							
		4							
		3	PBX call 0000 - 1001: Ten-key, 1011: Reserved, 1100: Reserved, 1101: Reserved 1110: Reserved, 1111: PBX unconnected						
		2							
		1							
		0							
0e021a	Protocol monitor	7		Utility Mode (5)	0x00	0x00	0x00	XC	7A
		6							
		5	TEL/FAX switching RBT monitor sound 0: OFF, 1: ON						
		4	Speaker sounding disabled when off-hook key is pressed 1: Disabled, 0: Not disabled						
		3							
		2							
		1							
		0							
0e021b	Reception function (disabled)	7		Utility Mode Special Setting (0-4)	0x3f	0x3f	0x3f	XC	7B
		6							
		5	Remote station name display (name display) (variable) 0: Enabled, 1: Disabled						
		4	Reserved (fixed at 1)						
		3	Remote station No./name display (variable) 0: Enabled, 1: Disabled						
		2	Closed Network RX (variable) 0: Valid 1: Prohibited Be sure to set the same value as that for the main line. (Impossible of each setting)						
		1	Reserved (Fixed at 1)						
		0	Reserved (Fixed at 1)						
0e021c	PBX outside line access code 1 (BCD)	7	1st digit	Utility Mode	0xff	0xff	0xff	XC	7C
		6							
		5							
		4							
		3	2nd digit						
		2							
		1							

Address	Items	Bit No	Contents	Setting	Default			CSRC	
					Japan	North America	Europe	Command	Parameter
		0							
0e021d	PBX outside line access code 2 (BCD)	7	3rd digit	Utility Mode	0xff	0xff	0xff	XC	7D
		6							
		5							
		4							
		3	4th digit						
		2							
		1							
		0							
0e021e	Limit of long size reception	7		-	0x00	0x00	0x00	XC	7E
		6							
		5							
		4							
		3							
		2							
		1							
		0	Limit of long size reception 0: Limit 1: Unlimited						
0e021f	Max. size of long original received (In the case of 400 dpi or less)	7	When the resolution for reception is 400 dpi or less, the size of a long original received that is regarded as an error (The maximum size is a decimal value x 10 mm. 0 is regarded as 1000 mm.)	-	0x64	0x64	0x64	XC	7F
		6							
		5							
		4							
		3							
		2							
		1							
		0							

11.25.9 0e022#

Address	Items	Bit No	Contents	Setting	Default			CSRC	
					Japan	North America	Europe	Command	Parameter
0e0220	Max. size of long original received (In the case of 600 dpi or less)	7	When the resolution for reception is 600 dpi, the size of a long original received that is regarded as an error (The maximum length is a decimal value x 10 mm. 0 is regarded as 1000 mm.)	-	0x64	0x64	0x64	XC	80
		6							
		5							
		4							
		3							
		2							
		1							
		0							
0e0221	Voice response output level adjustment	7		-	0x0e	0x0e	0x0e	XC	81
		6							
		5							
		4							
		3	Voice response volume (HEX) 0000: min - 1111: max						
		2							
		1							
		0							
0e0222	Monitor speaker (Received signal sound)	7		Utility Mode (0-4)	0x14	0x14	0x14	XC	82
		6							
		5							
		4	Speaker volume (HEX) (0-1F)						
		3							
		2							
		1							
		0							

Address	Items	Bit No	Contents	Setting	Default			CSRC	
					Japan	North America	Europe	Command	Parameter
0e0223 - 0e022d	Reserved area	7		-	ALL 0x00	ALL 0x00	ALL 0x00	XC	83 - 8D
		6							
		5							
		4							
		3							
		2							
		1							
		0							
0e022e	External phone off hook determination threshold value	7	External phone off hook determination threshold value current (unit: 1 mA, HEX)	-	0x00	0x00	0x00	XC	8E
		6							
		5							
		4							
		3							
		2							
		1							
		0							

11.25.10 0f002#

Address	Items	Bit No	Contents	Setting	Default			CSRC	
					Japan	North America	Europe	Command	Parameter
0f0020	Reception main scan resolution capacity [0]	7	400dpi	-	0xaa	0xaa	0xaa	X2	20
		6	300dpi						
		5	200dpi						
		4							
		3	16pels/mm						
		2							
		1	8pels/mm						
		0							
0f0021	Reception main scan resolution capacity [1]	7		-	0x01	0x01	0x01	X2	21
		6							
		5							
		4							
		3							
		2	(1200dpi)						
		1	(800dpi)						
		0	600dpi						
0f0022	Reception sub scan resolution capacity [0]	7	400dpi	-	0xbb	0xbb	0xbb	X2	22
		6	300dpi						
		5	200dpi						
		4	100dpi						
		3	15.4 l/mm						
		2							
		1	7.7 l/mm						
		0	3.85 l/mm						
0f0023	Reception sub scan resolution capacity [1]	7		-	0x01	0x01	0x01	X2	23
		6							
		5							
		4							
		3							
		2	(1200dpi)						
		1	(800dpi)						
		0	600dpi						
0f0024	Reception coding system capacity	7		-	0x1f	0x1f	0x1f	X2	24
		6							
		5	(JPEG)						

Address	Items	Bit No	Contents	Setting	Default			CSRC	
					Japan	North America	Europe	Command	Parameter
		4	JBIG						
		3	MMR						
		2	MR						
		1	MH						
		0	THRU						
0f0025	Reception original width capacity	7		-	0x0e	0x0e	0x0e	X2	25
		6							
		5	(Legal)						
		4	(Letter)						
		3	A3						
		2	B4						
		1	A4						
		0	(A5)						
0f0026	Reception original length capacity	7		-	0x46	0x46	0x46	X2	26
		6	Unlimited						
		5	(Legal)						
		4	(Letter)						
		3							
		2	B4						
		1	A4						
		0	(A5)						
0f0027	Reception speed capacity [0]	7		-	0x1b	0x1b	0x1b	X2	27
		6							
		5							
		4	V.29-96						
		3	V.29-72						
		2							
		1	V.27-48						
		0	V.27-24						
0f0028	Reception speed capacity [1]	7	V.17-144	-	0xfc	0xfc	0xfc	X2	28
		6	V.17-120						
		5	V.17-96						
		4	V.17-72						
		3	V.33-144						
		2	V.33-120						
		1	(TCM-96)						
		0	(TCM-72)						
0f0029	Reception speed capacity [2]	7	V.34-192	-	0xff	0xff	0xff	X2	29
		6	V.34-168						
		5	V.34-144						
		4	V.34-120						
		3	V.34-96						
		2	V.34-72						
		1	V.34-48						
		0	V.34-24						
0f002a	Reception speed capacity [3]	7		-	0x3f	0x3f	0x3f	X2	2A
		6							
		5	V.34-336						
		4	V.34-312						
		3	V.34-288						
		2	V.34-264						
		1	V.34-240						
		0	V.34-216						
0f002b	Reception MSLT capacity	7	T3.85 or 200 x 100 dpi (0-40) ms unit	-	0x05	0x05	0x05	X2	2B
		6							
		5							

Address	Items	Bit No	Contents	Setting	Default			CSRC	
					Japan	North America	Europe	Command	Parameter
		4							
		3							
		2							
		1							
		0							
0f002c	Reception MSLT capacity	7	T7.7 or 200 x 200 dpi (0-40) ms unit	-	0x05	0x05	0x05	X2	2C
		6							
		5							
		4							
		3							
		2							
		1							
		0							
0f002d	Reception MSLT capacity	7	T11.55 or 300 x 300 dpi (0-40) ms unit	-	0x05	0x05	0x05	X2	2D
		6							
		5							
		4							
		3							
		2							
		1							
		0							
0f002e	Reception MSLT capacity	7	T15.4 or 400 x 400 dpi or 600 x 600 dpi (0-40) ms unit	-	0x05	0x05	0x05	X2	2E
		6							
		5							
		4							
		3							
		2							
		1							
		0							
0f002f	Reception ECM capacity	7		-	0x01	0x01	0x01	X2	2F
		6							
		5							
		4							
		3							
		2							
		1							
		0	ECM reception capacity 0: OFF, 1: ON						

11.25.11 0f003#

Address	Items	Bit No	Contents	Setting	Default			CSRC	
					Japan	North America	Europe	Command	Parameter
0f0030	Reception protocol capacity	7		-	0x11	0x11	0x11	X2	30
		6							
		5							
		4	V8/V34						
		3							
		2							
		1							
		0	G3S						
0f0031	Reception option frame capacity	7		-	0x07	0x07	0x07	X2	31
		6							
		5							
		4	(BFT)						
		3	(BTM)						

Address	Items	Bit No	Contents	Setting	Default			CSRC	
					Japan	North America	Europe	Command	Parameter
		2	PWD						
		1	(SEP)						
		0	SUB						
0f0032 - 0f003f	Reserved area	7		-	ALL 0x00	ALL 0x00	ALL 0x00	X2	32 - 3F
		6							
		5							
		4							
		3							
		2							
		1							
		0							

11.25.12 10002#

Address	Items	Bit No	Contents	Setting	Default			CSRC	
					Japan	North America	Europe	Command	Parameter
100020	Transmission main scan line resolution instruction [0]	7	400dpi	-	0x22	0x22	0x22	X2	60
		6	300dpi						
		5	200dpi						
		4							
		3	16pels/mm						
		2							
		1	8pels/mm						
		0							
100021	Transmission main scan line resolution instruction [1]	7		-	0x01	0x01	0x01	X2	61
		6							
		5							
		4							
		3							
		2	1200dpi						
		1	800dpi						
		0	600dpi						
100022	Transmission sub scanning resolution instruction [0]	7	400dpi	-	0x11	0x11	0x11	X2	62
		6	300dpi						
		5	200dpi						
		4	100dpi						
		3	15.4 l/mm						
		2							
		1	7.7 l/mm						
		0	3.85 l/mm						
100023	Transmission sub scanning resolution instruction [1]	7		-	0x01	0x01	0x01	X2	63
		6							
		5							
		4							
		3							
		2	1200dpi						
		1	800dpi						
		0	600dpi						
100024	Transmission coding method instruction	7		-	0x1f	0x1f	0x1f	X2	64
		6							
		5	(JPEG)						
		4	JBIG						
		3	MMR						
		2	MR						
		1	MH						
		0	THRU						

Address	Items	Bit No	Contents	Setting	Default			CSRC	
					Japan	North America	Europe	Command	Parameter
100025	Transmission document width instruction	7		-	0x0e	0x0e	0x0e	X2	65
		6							
		5	(Legal)						
		4	(Letter)						
		3	A3						
		2	B4						
		1	A4						
		0	(A5)						
100026	Transmission document length instruction	7		-	0x46	0x46	0x46	X2	66
		6	Unlimited						
		5	(Legal)						
		4	(Letter)						
		3							
		2	B4						
		1	A4						
		0	(A5)						
100027	Transmission speed instruction [0]	7		-	0x1b	0x1b	0x1b	X2	67
		6							
		5							
		4	V.29-96						
		3	V.29-72						
		2							
		1	V.27-48						
		0	V.27-24						
100028	Transmission speed instruction [1]	7	V.17-144	-	0xf0	0xf0	0xf0	X2	68
		6	V.17-120						
		5	V.17-96						
		4	V.17-72						
		3	V.33-144						
		2	V.33-120						
		1	(TCM-96)						
		0	(TCM-72)						
100029	Transmission speed instruction [2]	7	V.34-192	-	0xff	0xff	0xff	X2	69
		6	V.34-168						
		5	V.34-144						
		4	V.34-120						
		3	V.34-96						
		2	V.34-72						
		1	V.34-48						
		0	V.34-24						
10002a	Transmission speed instruction [3]	7		-	0x3f	0x3f	0x3f	X2	6A
		6							
		5	V.34-336						
		4	V.34-312						
		3	V.34-288						
		2	V.34-264						
		1	V.34-240						
		0	V.34-216						
10002b	Transmission MSLT instruction	7	T3.85 or 200 x 100dpi (0-40) ms unit	-	0x05	0x05	0x05	X2	6B
		6							
		5							
		4							
		3							
		2							
		1							
		0							

Address	Items	Bit No	Contents	Setting	Default			CSRC	
					Japan	North America	Europe	Command	Parameter
10002c	Transmission MSLT instruction	7	T7.7 or 200 x 200dpi (0-40) ms unit	-	0x05	0x05	0x05	X2	6C
		6							
		5							
		4							
		3							
		2							
		1							
		0							
10002d	Transmission MSLT instruction	7	T11.55 or 300 x 300dpi (0-40) ms unit	-	0x05	0x05	0x05	X2	6D
		6							
		5							
		4							
		3							
		2							
		1							
		0							
10002e	Transmission MSLT instruction	7	T15.4 or 400 x 400dpi or 600 x 600dpi (0-40) ms unit	-	0x05	0x05	0x05	X2	6E
		6							
		5							
		4							
		3							
		2							
		1							
		0							
10002f	Transmission ECM instruction	7		-	0x01	0x01	0x01	X2	6F
		6							
		5							
		4							
		3							
		2							
		1	ECM transmission frame size 0: 256 1: 64						
		0	ECM transmission instruction 0: OFF 1: ON						

11.25.13 10003#

Address	Items	Bit No	Contents	Setting	Default			CSRC	
					Japan	North America	Europe	Command	Parameter
100030	Transmission protocol instruction	7		-	0x11	0x11	0x11	X2	70
		6							
		5							
		4	V8/V34						
		3							
		2							
		1							
		0	G3S						
100031	Transmission option frame instruction	7		-	0x00	0x00	0x00	X2	71
		6							
		5							
		4	(BFT)						
		3	(BTM)						
		2	PWD						
		1	(SEP)						
		0	SUB						

Address	Items	Bit No	Contents	Setting	Default			CSRC	
					Japan	North America	Europe	Command	Parameter
100032 - 10003f	Reserved area	7		-	ALL 0x00	ALL 0x00	ALL 0x00	X2	72 - 7F
		6							
		5							
		4							
		3							
		2							
		1							
		0							

11.26 FAX setting (Address parameter list: for line 3)

11.26.1 0e02b#

Address	Items	Bit No	Contents	Setting	Default			CSRC	
					Japan	North America	Europe	Command	Parameter
0e02b0	Transmission ATT	7	Tone signal/FSK transmission ATT (HEX) 1 dBm every (0 to -15dBm)	Utility Mode Special Setting	0xaa	0xaa	0xaa	XF	00
		6							
		5							
		4							
		3	High-speed signal transmission ATT (HEX) 1 dBm every (0 to -15dBm)						
		2							
		1							
		0							
0e02b1	CED Transmission ATT	7		Utility Mode Special Setting (0-3)	0x0a	0x0a	0x0a	XF	01
		6							
		5							
		4							
		3	CED/ANS transmission ATT (HEX) 1 dBm every (0 to -15dBm)						
		2							
		1							
		0							
0e02b2	CD/SED ON level	7		Utility Mode Special Setting (0,1)	0x03	0x03	0x03	XF	02
		6							
		5							
		4							
		3							
		2							
		1	CD/SED ON level [dBm] 00: -33, 01: -38, 10: -43, 11: -48						
		0							
0e02b3	Transmission cable amplitude EQL	7		Utility Mode Special Setting (4,5)	0x00	0x00	0x00	XF	03
		6							
		5	Transmission cable EQL0 00: 0dB, 01: 4dB, 10: 8dB, 11: 12dB						
		4							
		3							
		2							
		1							
		0							
0e02b4	Reception cable amplitude EQL	7		Utility Mode Special Setting (4,5)	0x00	0x00	0x00	XF	04
		6							
		5	Reception cable EQL 00: 0dB, 01: 4dB, 10: 8dB, 11: 12dB						
		4							
		3							
		2							
		1							
		0							
0e02b5	TEL/FAX switching	7	Time from vocal response to RBT transmission (CNG detection waiting time 2)	Utility Mode Special	0x00	0x00	0x00	XF	05

Address	Items	Bit No	Contents	Setting	Default			CSRC	
					Japan	North America	Europe	Command	Parameter
			0: 4 sec. 1: 2 sec.	Setting (4,5)					
		6	Time from reception to voice response transmission (CNG detection waiting time 1) 0: 2 sec. 1: 4 sec.						
		5	TEL/FAX switching mode 0: Disabled 1: Enabled						
		4	External telephone no ringing setting 0: Disabled 1: Enabled (disconnected)						
		3	TEL/FAX switching ON response details 0: Voice response + RBT transmission 1: RBT transmission only						
		2							
		1							
		0							
0e02b6	Ring Back Tone parameter	7	RBT form 000: No, 001: Japan, 010: US, 011: UK, 100: Germany, 101 - 111: Others	Utility Mode Special Setting (0-3,5-7)	0x00	0x00	0x00	XF	06
		6							
		5							
		4	CED transmitted upon TEL/FAX switching						
		3	RBT transmission level (HEX) 0 to -15 dBm						
		2							
		1							
		0							
0e02b7	Operated in international mode	7	DIS waiting frequency 0: Always once, 1: Twice in overseas communication	Utility Mode Special Setting (6,7)	0x40	0x40	0x40	XF	07
		6	Overseas communication 0: No, 1: Yes						
		5							
		4							
		3							
		2							
		1							
		0							
0e02b8	Starting speed in international mode (V29 modem)	7		Utility Mode Special Setting (0,1,3,4)	0x02	0x02	0x02	XF	08
		6							
		5							
		4	9600/V.29bps						
		3	7200/V.29bps						
		2							
		1	4800/V.27bps						
		0	2400/V.27bps						
0e02b9	Starting speed in international mode (V17 or V33 modem)	7	14400bps/V.17	Utility Mode Special Setting (4-7)	0x10	0x10	0x10	XF	09
		6	12000bps/V.17						
		5	9600bps/V.17						
		4	7200bps/V.17						
		3							
		2							
		1							
		0							
0e02ba	Starting speed in international mode (V34)	7	33600bps/V.34	Utility Mode Special Setting	0x20	0x20	0x20	XF	0A
		6	31200bps/V.34						
		5	28800bps/V.34						

Address	Items	Bit No	Contents	Setting	Default			CSRC	
					Japan	North America	Europe	Command	Parameter
		4	26400bps/V.34						
		3	24000bps/V.34						
		2	21600bps/V.34						
		1	19200bps/V.34						
		0	16800bps/V.34						
0e02bb	CD OFF timer	7	CD OFF timer (unit: 100 ms, HEX)	-	0x14	0x14	0x14	XF	0B
		6							
		5							
		4							
		3							
		2							
		1							
		0							
0e02bc	CD ON integration time	7	CD ON integration time (unit: 100 ms, HEX)	-	0x06	0x06	0x06	XF	0C
		6							
		5							
		4							
		3							
		2							
		1							
		0							
0e02bd	Symbol speed maximum allowable value	7	V34 control ch data rate 0: 1200, 1: 2400	Utility Mode Special Setting (0-3,7)	0x05	0x05	0x05	XF	0D
		6							
		5							
		4							
		3	Max. allowable symbol speed 0000: 2400, 0001: Reserved, 0010: 2800 0011: 3000, 0100: 3200, 0101: 3429						
		2							
		1							
		0							
0e02be	Symbol rate selection criteria	7	Attenuation distortion property (-6dB to +6dB) 0000:-6, 0001:-5, 0010:-4, 0011:-3, 0100:-2, 0101:-1, 0110:0, 0111:+1, 1000:+2, 1001:+3, 1010:+4, 1011:+5, 1100:+6	Utility Mode Special Setting	0x66	0x66	0x66	XF	0E
		6							
		5							
		4							
		3	Band end S/N (-6dB to +6dB) 0000:-6, 0001:-5, 0010:-4, 0011:-3, 0100:-2, 0101:-1, 0110:0, 0111:+1, 1000:+2, 1001:+3, 1010:+4, 1011:+5, 1100:+6						
		2							
		1							
		0							
0e02bf	Primary channel data rate selection criteria	7	V.34 reception gain correction (-4.0dB to +3.5dB) 0000:0, 0001:+0.5, 0010:+1.0, 0011:+1.5, 0100:+2.0, 0101:+2.5, 0110:+3.0, 0111:+3.5, 1000:-4.0, 1001:-3.5, 1010:-3.0, 1011:-2.5, 1100:-2.0, 1101:-1.5, 1110:-1.0, 1111:-0.5	Utility Mode Special Setting (0-3)	0x08	0x08	0x08	XF	0F
		6							
		5							
		4							
		3	Primary channel data rate selection criteria (-8dB to +7dB) 0000:-8, 0001:-7, 0010:-6, 0011:-5, 0100:-4, 0101:-3, 0110:-2, 0111:-1, 1000:0, 1001:+1, 1010:+2, 1011:+3, 1100:+4, 1101:+5, 1110:+6, 1111:+7						
		2							
		1							
		0							

11.26.2 0e02c#

Address	Items	Bit No	Contents	Setting	Default			CSRC	
					Japan	North America	Europe	Command	Parameter
0e02c0	V34 primary channel fall back	7	No. of fall back frame errors (Hex)	-	0x03	0x03	0x03	XF	10
		6							
		5							
		4							
		3							
		2							
		1							
		0							
0e02c1	V34 control channel fall back	7	Fall back EQMVAL value (HEX)	-	0x40	0x40	0x40	XF	11
		6							
		5							
		4							
		3							
		2							
		1							
		0							
0e02c2	V34 OFF reception - V34 OFF time after error	7	Timer value after V34 reception error to reset the V34 OFF reception (min., HEX) (Enabled only when the transmission side cannot be specified)	-	0x0a	0x0a	0x0a	XF	12
		6							
		5							
		4							
		3							
		2							
		1							
		0							
0e02c3	V34 OFF reception - No. of successful consecutive V17 reception times to reset V34 OFF	7	No. of successful consecutive V17 reception times to reset V34 OFF reception after V34 reception error (No. of times, HEX) (Enabled only when the transmission side can be specified with Caller ID)	-	0x0a	0x0a	0x0a	XF	13
		6							
		5							
		4							
		3							
		2							
		1							
		0							
0e02c4	V34 OFF reception - Function switch (disabled)	7	V34 OFF function at manual reception 0: Enabled, 1: Disabled	-	0x00	0x02	0x02	XF	14
		6							
		5							
		4							
		3							
		2							
		1	V.34 OFF reset mode = No. of successful consecutive V.17 reception times (ID specified) 0: Enabled, 1: Disabled						
		0	V.34 OFF reset mode = time (ID cannot be specified) 0: Enabled, 1: Disabled						
0e02c5	JBIG parameter	7		-	0x01	0x01	0x01	XF	15
		6							
		5							
		4							
		3							
		2							

Address	Items	Bit No	Contents	Setting	Default			CSRC	
					Japan	North America	Europe	Command	Parameter
		1	Use of following FP JBIG option LO size at reduction 0: No, 1: Yes						
		0	JBIG optional L0 capacity 0: No, 1: Yes						
0e02c6 - 0e02c9	JBIG L0 size	7	JBIG optional LO size used for reduction (hex) (setting rangeF0x01 - 0xffffffff) [0] = HH, [1] = HL, [2] = LH, [3] = LL	-	0x00 0x00 0x00 0x80	0x00 0x00 0x00 0x80	0x00 0x00 0x00 0x80	XF	16 - 19
		6							
		5							
		4							
		3							
		2							
		1							
		0							
0e02ca	JBIG OFF reception - Function switch (disabled)	7		-	0x00	0x00	0x00	XF	1A
		6							
		5							
		4							
		3							
		2							
		1	JBIG OFF function at A3 high-definition reception (DIS re-transmission) 0: OFF, 1: ON						
		0	JBIG OFF function after JBIG reception error 0: Enabled, 1: Disabled						
0e02cb	JBIG OFF reception - JBIG OFF time after error	7	Timer value after JBIG reception error to reset JBIG OFF reception (min., HEX) (10 min. in case of 0)	-	0x0a	0x0a	0x0a	XF	1B
		6							
		5							
		4							
		3							
		2							
		1							
		0							
0e02cc	PBX dial tone detection frequency upper limit	7	PBX dial tone detection frequency upper limit (unit: 10 Hz, HEX)	-	0x31	0x00	0x00	XF	1C
		6							
		5							
		4							
		3							
		2							
		1							
		0							
0e02cd	PBX dial tone detection frequency lower limit	7	PBX dial tone detection frequency lower limit (unit: 10 Hz, HEX)	-	0x1f	0x00	0x00	XF	1D
		6							
		5							
		4							
		3							
		2							
		1							
		0							
0e02ce	PBX dial tone detection time	7	PBX dial tone detection time or max. ON time value (unit: 20 ms, HEX)	-	0x32	0x00	0x00	XF	1E
		6							
		5							
		4							
		3							
		2							
		1							

Address	Items	Bit No	Contents	Setting	Default			CSRC	
					Japan	North America	Europe	Command	Parameter
		0							
0e02cf	PBX dial tone ON time min. value	7	PBX dial tone ON time min. value (unit: 20 ms, HEX)	-	0x00	0x00	0x00	XF	1F
		6							
		5							
		4							
		3							
		2							
		1							
		0							

11.26.3 0e02d#

Address	Items	Bit No	Contents	Setting	Default			CSRC	
					Japan	North America	Europe	Command	Parameter
0e02d0	PBX dial tone OFF time max. value	7	PBX dial tone OFF time max. value (unit: 20 ms, HEX)	-	0x00	0x00	0x00	XF	20
		6							
		5							
		4							
		3							
		2							
		1							
		0							
0e02d1	PBX dial tone OFF time min. value	7	PBX dial tone OFF time min. value (unit: 20 ms, HEX)	-	0x00	0x00	0x00	XF	21
		6							
		5							
		4							
		3							
		2							
		1							
		0							
0e02d2	PBX dial tone waiting time	7	PBX dial tone waiting time or pre-pause time (unit: 1 sec, HEX)	-	0x03	0x03	0x03	XF	22
		6							
		5							
		4							
		3							
		2							
		1							
		0							
0e02d3	PBX dial tone instantaneous break detection time	7	Instantaneous break detection time (unit: 20 ms, HEX) or tone detection frequency (times, HEX)	-	0x00	0x00	0x00	XF	23
		6							
		5							
		4							
		3							
		2							
		1							
		0							
0e02d4	1st dial tone detection frequency upper limit	7	1st dial tone detection frequency upper limit (unit: 10 Hz, HEX)	-	0x31	0x35	0x34	XF	24
		6							
		5							
		4							
		3							
		2							
		1							
		0							
0e02d5	1st dial tone detection	7	1st dial tone detection frequency lower limit (unit: 10 Hz, HEX)	-	0x1f	0x23	0x1c	XF	25
		6							

Address	Items	Bit No	Contents	Setting	Default			CSRC	
					Japan	North America	Europe	Command	Parameter
	frequency lower limit	5							
		4							
		3							
		2							
		1							
		0							
0e02d6	1st dial tone detection time	7	1st dial tone detection time or max. ON time value (unit: 20 ms, HEX)	-	0x32	0x32	0x1a	XF	26
		6							
		5							
		4							
		3							
		2							
		1							
		0							
0e02d7	1st dial tone ON time min. value	7	1st dial tone ON time min. value (unit: 20 ms, HEX)	-	0x00	0x00	0x00	XF	27
		6							
		5							
		4							
		3							
		2							
		1							
		0							
0e02d8	1st dial tone OFF time max. value	7	1st dial tone OFF time max. value (unit: 20 ms, HEX)	-	0x00	0x00	0x00	XF	28
		6							
		5							
		4							
		3							
		2							
		1							
		0							
0e02d9	1st dial tone OFF time min. value	7	1st dial tone OFF time min. value (unit: 20 ms, HEX)	-	0x00	0x00	0x00	XF	29
		6							
		5							
		4							
		3							
		2							
		1							
		0							
0e02da	1st dial tone waiting time	7	1st dial tone waiting time or pre-pause time (unit: 1 sec, HEX)	-	0x03	0x03	0x04	XF	2A
		6							
		5							
		4							
		3							
		2							
		1							
		0							
0e02db	1st dial tone instantaneous break detection time	7	Instantaneous break detection time (unit: 20 ms, HEX) or tone detection frequency (times, HEX)	-	0x00	0x00	0x05	XF	2B
		6							
		5							
		4							
		3							
		2							
		1							
		0							
0e02dc	2nd dial tone detection	7	2nd dial tone detection frequency upper limit (unit: 10 Hz, HEX)	-	0x31	0x00	0x00	XF	2C
		6							

Address	Items	Bit No	Contents	Setting	Default			CSRC	
					Japan	North America	Europe	Command	Parameter
	frequency upper limit	5							
		4							
		3							
		2							
		1							
		0							
0e02dd	2nd dial tone detection frequency lower limit	7	2nd dial tone detection frequency lower limit (unit: 10 Hz, HEX)	-	0x1f	0x00	0x00	XF	2D
		6							
		5							
		4							
		3							
		2							
		1							
		0							
0e02de	2nd dial tone detection time	7	2nd dial tone detection time or max. ON time value (unit: 20 ms, HEX)	-	0x08	0x00	0x00	XF	2E
		6							
		5							
		4							
		3							
		2							
		1							
		0							
0e02df	2nd dial tone ON time min. value	7	2nd dial tone ON time min. value (unit: 20 ms, HEX)	-	0x02	0x00	0x00	XF	2F
		6							
		5							
		4							
		3							
		2							
		1							
		0							

11.26.4 0e02e#

Address	Items	Bit No	Contents	Setting	Default			CSRC	
					Japan	North America	Europe	Command	Parameter
0e02e0	2nd dial tone OFF time max. value	7	2nd dial tone OFF time max. value (unit: 20 ms, HEX)	-	0x0a	0x00	0x00	XF	30
		6							
		5							
		4							
		3							
		2							
		1							
		0							
0e02e1	2nd dial tone OFF time min. value	7	2nd dial tone OFF time min. value (unit: 20 ms, HEX)	-	0x04	0x00	0x00	XF	31
		6							
		5							
		4							
		3							
		2							
		1							
		0							
0e02e2	2nd dial tone waiting time	7	2nd dial tone waiting time or pre-pause time (unit: 1 sec, HEX)	-	0x03	0x03	0x03	XF	32
		6							
		5							
		4							
		3							

Address	Items	Bit No	Contents	Setting	Default			CSRC	
					Japan	North America	Europe	Command	Parameter
		2							
		1							
		0							
0e02e3	2nd dial tone instantaneous break detection time	7	Instantaneous break detection time (unit: 20 ms, HEX) or tone detection frequency (times, HEX)	-	0x03	0x00	0x00	XF	33
		6							
		5							
		4							
		3							
		2							
		1							
		0							
0e02e4	3rd dial tone detection frequency upper limit	7	3rd dial tone detection frequency upper limit (unit: 10 Hz, HEX)	-	0x00	0x00	0x00	XF	34
		6							
		5							
		4							
		3							
		2							
		1							
		0							
0e02e5	3rd dial tone detection frequency lower limit	7	3rd dial tone detection frequency lower limit (unit: 10 Hz, HEX)	-	0x00	0x00	0x00	XF	35
		6							
		5							
		4							
		3							
		2							
		1							
		0							
0e02e6	Busy tone detection frequency upper limit	7	Detection frequency upper limit (unit: 10 Hz, HEX)	-	0x31	0x00	0x00	XF	36
		6							
		5							
		4							
		3							
		2							
		1							
		0							
0e02e7	Busy tone detection frequency lower limit	7	Detection frequency lower limit (unit: 10 Hz, HEX)	-	0x1f	0x00	0x00	XF	37
		6							
		5							
		4							
		3							
		2							
		1							
		0							
0e02e8	Busy tone ON time max. value	7	Busy tone ON time max. value (unit: 20 ms, HEX)	-	0x1e	0x00	0x00	XF	38
		6							
		5							
		4							
		3							
		2							
		1							
		0							
0e02e9	Busy tone ON time min. value	7	Busy tone ON time min. value (unit: 20 ms, HEX)	-	0x14	0x00	0x00	XF	39
		6							
		5							
		4							
		3							

Address	Items	Bit No	Contents	Setting	Default			CSRC	
					Japan	North America	Europe	Command	Parameter
		2							
		1							
		0							
0e02ea	Busy tone OFF time max. value	7	Busy tone OFF time max. value (unit: 20 ms, HEX)	-	0x1e	0x00	0x00	XF	3A
		6							
		5							
		4							
		3							
		2							
		1							
		0							
0e02eb	Busy tone OFF time min. value	7	Busy tone OFF time min. value (unit: 20 ms, HEX)	-	0x14	0x00	0x00	XF	3B
		6							
		5							
		4							
		3							
		2							
		1							
		0							
0e02ec	Ringer detection frequency upper limit	7	Ringer detection frequency upper limit (unit: 1 Hz, HEX)	-	0x46	0x46	0x46	XF	3C
		6							
		5							
		4							
		3							
		2							
		1							
		0							
0e02ed	Ringer detection frequency lower limit	7	Ringer detection frequency lower limit (unit: 1 Hz, HEX)	-	0x0c	0x0c	0x0c	XF	3D
		6							
		5							
		4							
		3							
		2							
		1							
		0							
0e02ee	Ringer ON time max. value	7	Ringer ON time max. value (unit: 20 ms, HEX)	-	0x00	0x00	0x00	XF	3E
		6							
		5							
		4							
		3							
		2							
		1							
		0							
0e02ef	Ringer ON time min. value	7	Ringer ON time min. value (unit: 20 ms, HEX)	-	0x0a	0x0a	0x08	XF	3F
		6							
		5							
		4							
		3							
		2							
		1							
		0							

11.26.5 0e02f#

Address	Items	Bit No	Contents	Setting	Default			CSRC	
					Japan	North America	Europe	Command	Parameter
0e02f0	Ringer OFF time max. value	7	Ringer OFF time max. value (unit: 100 ms, HEX)	-	0x3c	0x3c	0x46	XF	40
		6							
		5							
		4							
		3							
		2							
		1							
		0							
0e02f1	Ringer OFF time min. value	7	Ringer OFF time min. value (unit: 100 ms, HEX)	Utility Mode Special Setting	0x02	0x00	0x00	XF	41
		6							
		5							
		4							
		3							
		2							
		1							
		0							
0e02f2	PB dial signal transmission time	7	PB dial signal transmission time (unit: 5 ms, HEX)	-	0x15	0x19	0x15	XF	42
		6							
		5							
		4							
		3							
		2							
		1							
		0							
0e02f3	PB dial inter-digit pause	7	PB dial inter-digit pause time (unit: 5 ms, HEX)	-	0x11	0x15	0x11	XF	43
		6							
		5							
		4							
		3							
		2							
		1							
		0							
0e02f4	10 pps pulse dial break rate	7	10 pps pulse dial break rate (%, HEX)	-	0x44	0x3d	0x3d	XF	44
		6							
		5							
		4							
		3							
		2							
		1							
		0							
0e02f5	10 pps pulse dial inter-digit pause	7	10 pps pulse dial inter digit pause (unit: 10 ms, HEX)	-	0x68	0x68	0x5e	XF	45
		6							
		5							
		4							
		3							
		2							
		1							
		0							
0e02f6	20 pps pulse dial break rate	7	20 pps pulse dial break rate (%, HEX)	-	0x44	0x3d	0x3d	XF	46
		6							
		5							
		4							
		3							
		2							
		1							

Address	Items	Bit No	Contents	Setting	Default			CSRC	
					Japan	North America	Europe	Command	Parameter
		0							
0e02f7	20 pps pulse dial inter-digit pause	7	20 pps pulse dial inter-digit pause (unit: 10 ms, HEX)	-	0x59	0x40	0x5c	XF	47
		6							
		5							
		4							
		3							
		2							
		1							
		0							
0e02f8	PB signal transmission level	7	PB signal transmission level (unit: 1 dBm, HEX)	Utility Mode Special Setting	0x0a	0x0a	0x06	XF	48
		6							
		5							
		4							
		3							
		2							
		1							
		0							
0e02f9	PB signal level difference (HL)	7	PB signal level difference (HL) (unit: 0.5 dBm, HEX)	Utility Mode Special Setting	0x04	0x04	0x04	XF	49
		6							
		5							
		4							
		3							
		2							
		1							
		0							
0e02fa	DCLOOP integration time at CML OFF	7	DCLOOP integration time at CML relay OFF (unit: 5 ms, HEX) (Lower limit 20 ms)	-	0x50	0x50	0x50	XF	4A
		6							
		5							
		4							
		3							
		2							
		1							
		0							
0e02fb	DCLOOP integration time at CML ON	7	DCLOOP integration time at CML relay ON (unit: 5 ms, HEX) (Lower limit 20 ms)	-	0x10	0x10	0x10	XF	4B
		6							
		5							
		4							
		3							
		2							
		1							
		0							
0e02fc	Pause time	7		Utility Mode Special Setting (0-2)	0x01	0x01	0x01	XF	4C
		6							
		5							
		4							
		3							
		2	Pause time (unit:sec, HEX)						
		1							
		0							
0e02fd	DC-LOOP check mode	7	DC-LOOP check 0: No, 1: Always	Utility Mode Special Setting (6,7)	0x00	0x00	0x00	XF	4D
		6							
		5							
		4							
		3							
		2							

Address	Items	Bit No	Contents	Setting	Default			CSRC	
					Japan	North America	Europe	Command	Parameter
		1							
		0							
0e02fe	DC-LOOP waiting time	7	DC-LOOP waiting time (unit: 100 ms, HEX)	-	0x00	0x00	0x00	XF	4E
		6							
		5							
		4							
		3							
		2							
		1							
		0							
0e02ff	DC-LOOP instantaneous break allowable time (ph.A)	7	DC-LOOP instantaneous break allowable time (unit: 10 ms, HEX) (at the time of calling, CML ON to end of dialing)	-	0x00	0x00	0x00	XF	4F
		6							
		5							
		4							
		3							
		2							
		1							
		0							

11.26.6 0e030#

Address	Items	Bit No	Contents	Setting	Default			CSRC	
					Japan	North America	Europe	Command	Parameter
0e0300	DC-LOOP instantaneous break allowable time (ph.B)	7	DC-LOOP instantaneous break allowable time (unit: 10ms, HEX) (after completion of dialing and after CML ON at the time of reception)	-	0x00	0x00	0x00	XF	50
		6							
		5							
		4							
		3							
		2							
		1							
		0							
0e0301	Dial mode RING DET mode	7		Utility Mode (0,1) Utility Mode Special Setting (4,5)	0x12	0x10	0x10	XF	51
		6							
		5	RING detection mode 01: No. of times, 10: Time						
		4							
		3	Pulse format 00: General, 01: SW, 10: NO						
		2							
		1	Dialing method 00: PB, 01: 10pps, 10: 20pps, 11: 16pps						
		0							
0e0302	1st/2nd DT detection parameter	7		-	0x00	0x00	0x00	XF	52
		6							
		5							
		4							
		3	At 2nd DT detection DP dialing only						
		2							
		1							
		0	1st DT2 type						
0e0303	Tone detection	7		Utility Mode Special Setting (4,5)	0x11	0x01	0x01	XF	53
		6							
		5	1300Hz 0: No, 1: Yes						
		4	BusyTone 0: No, 1: Yes						

Address	Items	Bit No	Contents	Setting	Default			CSRC	
					Japan	North America	Europe	Command	Parameter
		3	PBX DT 0: No, 1: Yes						
		2	3rd Dt 0: No, 1: Yes						
		1	2nd DT 0: No, 1: Yes						
		0	1st DT 0: No, 1: Yes						
0e0304	No. of busy tone detection times	7	No. of busy tone detection times (HEX)	Utility Mode Special Setting	0x02	0x00	0x00	XF	54
		6							
		5							
		4							
		3							
		2							
		1							
		0							
0e0305	No. of RING detection times	7	No. of RING detection times (times, HEX)	Utility Mode	0x02	0x02	0x02	XF	55
		6							
		5							
		4							
		3							
		2							
		1							
		0							
0e0306	RING detection time	7	Ring detection time (sec, HEX)	Utility Mode Special Setting	0x06	0x06	0x06	XF	56
		6							
		5							
		4							
		3							
		2							
		1							
		0							
0e0307	Remote station response waiting time	7	Remote station response waiting time at calling (unit:sec, HEX)	Utility Mode Special Setting	0x37	0x37	0x37	XF	57
		6							
		5							
		4							
		3							
		2							
		1							
		0							
0e0308	Answering machine function	7	Answering machine CNG detection time (unit: 10 sec, HEX) (1-7)	Utility Mode Special Setting (4)	0x64	0x64	0x64	XF	58
		6							
		5							
		4	Answer mode 0: OFF, 1: ON						
		3	Answering machine DC-LOOP detection time (unit: 5 sec, HEX) (1-15)						
		2							
		1							
		0							
0e0309 - 0e030a	Remote reception password	7	ASCII[2]	Utility Mode	0x2a 0x20	0x2a 0x20	0x2a 0x20	XF	59 - 5A
		6							
		5							
		4							
		3							

Address	Items	Bit No	Contents	Setting	Default			CSRC	
					Japan	North America	Europe	Command	Parameter
		2							
		1							
		0							
0e030b	RBT transmission time	7	RingBackTone signal transmission time (unit: 1000 ms, HEX)	-	0x14	0x14	0x14	XF	5B
		6							
		5							
		4							
		3							
		2							
		1							
		0							
0e030c	CAR signal ON time max. value	7	CAR ON time max. value (unit: 20 ms, HEX)	-	0x28	0x00	0x00	XF	5C
		6							
		5							
		4							
		3							
		2							
		1							
		0							
0e030d	CAR signal ON time min. value	7	CAR ON time min. value (unit: 20 ms, HEX)	-	0x0a	0x00	0x00	XF	5D
		6							
		5							
		4							
		3							
		2							
		1							
		0							
0e030e	CAR signal OFF time max. value	7	CAR OFF time max. value (unit: 20 ms, HEX)	-	0x28	0x00	0x00	XF	5E
		6							
		5							
		4							
		3							
		2							
		1							
		0							
0e030f	CAR signal OFF time min. value	7	CAR OFF time min. value (unit: 20 ms, HEX)	-	0x0a	0x00	0x00	XF	5F
		6							
		5							
		4							
		3							
		2							
		1							
		0							

11.26.7 0e031#

Address	Items	Bit No	Contents	Setting	Default			CSRC	
					Japan	North America	Europe	Command	Parameter
0e0310	No. of CAR signal detection times	7	No. of CAR (information reception terminal start signal) detection times (times, HEX)	-	0x01	0x00	0x00	XF	60
		6							
		5							
		4							
		3							
		2							
		1							
		0							

Address	Items	Bit No	Contents	Setting	Default			CSRC	
					Japan	North America	Europe	Command	Parameter
0e0311	Caller ID signal waiting time	7	ID waiting time after Caller ID/DIAL IN primary response (unit 1000 ms, HEX)	-	0x05	0x00	0x00	XF	61
		6							
		5							
		4							
		3							
		2							
		1							
		0							
0e0312	Remote reception password entry waiting time	7	Password signal (DTMF) detection waiting time (unit: 100 ms, HEX)	-	0x14	0x14	0x14	XF	62
		6							
		5							
		4							
		3							
		2							
		1							
		0							
0e0313	Normal/number display automatic line distinction function	7	Automatic distinction function 0: OFF 1: ON	-	0x83	0x00	0x00	XF	63
		6							
		5							
		4							
		3	V23 signal detection waiting time when distinguished (x1 sec, HEX)						
		2							
		1							
		0							
0e0314	Monitor speaker (Transmission signal sound)	7	PB tone monitor at off-hook	Utility Mode (0-6)	0x10	0x10	0x10	XF	64
		6	Monitor speaker in communication 00: OFF 11: ON						
		5							
		4	Speaker volume (HEX) (0-1F)						
		3							
		2							
		1							
		0							
0e0315 - 0e031f	Numeric ID [20]	7	ASCII [20] When ID is less than 20 digits, left-justify and insert a space at the head. (No NULL terminator)	Utility Mode	ALL 0x20	ALL 0x20	ALL 0x20	XF	65 - 6F
		6							
		5							
		4							
		3							
		2							
		1							
		0							

11.26.8 0e032#

Address	Items	Bit No	Contents	Setting	Default			CSRC	
					Japan	North America	Europe	Command	Parameter
0e0320 - 0e0328	Numeric ID [20]	7	ASCII [20] When ID is less than 20 digits, left-justify and insert a space at the head. (No NULL terminator)	Utility Mode	ALL 0x20	ALL 0x20	ALL 0x20	XF	70 - 78
		6							
		5							
		4							
		3							
		2							
		1							
		0							

Address	Items	Bit No	Contents	Setting	Default			CSRC	
					Japan	North America	Europe	Command	Parameter
0e0329	PBX connection mode	7		Utility Mode (0-3)	0x0f	0x0f	0x0f	XF	79
		6							
		5							
		4							
		3	PBX call 0000 - 1001: Ten-key, 1011: Reserved, 1100: Reserved, 1101: Reserved 1110: Reserved, 1111: PBX unconnected						
		2							
		1							
		0							
0e032a	Protocol monitor	7		Utility Mode (5)	0x00	0x00	0x00	XF	7A
		6							
		5	TEL/FAX switching RBT monitor sound 0: OFF, 1: ON						
		4	Speaker sounding disabled when off-hook key is pressed 1: Disabled, 0: Not disabled						
		3							
		2							
		1							
		0							
0e032b	Reception function (disabled)	7		Utility Mode Special Setting (0-4)	0x3f	0x3f	0x3f	XF	7B
		6							
		5	Remote station name display (name display) (variable) 0: Enabled, 1: Disabled						
		4	Reserved (fixed at 1)						
		3	Remote station No./name display (variable) 0: Enabled, 1: Disabled						
		2	Closed Network RX (variable) 0: Valid 1: Prohibited Be sure to set the same value as that for the main line. (Impossible of each setting)						
		1	Reserved (Fixed at 1)						
		0	Reserved (Fixed at 1)						
0e032c	PBX outside line access code 1 (BCD)	7	1st digit	Utility Mode	0xff	0xff	0xff	XF	7C
		6							
		5							
		4							
		3	2nd digit						
		2							
		1							
		0							
0e032d	PBX outside line access code 2 (BCD)	7	3rd digit	Utility Mode	0xff	0xff	0xff	XF	7D
		6							
		5							
		4							
		3	4th digit						
		2							
		1							
		0							

Address	Items	Bit No	Contents	Setting	Default			CSRC	
					Japan	North America	Europe	Command	Parameter
0e032e	Limit of long size reception	7		-	0x00	0x00	0x00	XF	7E
		6							
		5							
		4							
		3							
		2							
		1							
		0	Limit of long size reception 0: Limit 1: Unlimited						
0e032f	Max. size of long original received (In the case of 400 dpi or less)	7	When the resolution for reception is 400 dpi or less, the size of a long original received that is regarded as an error (The maximum size is a decimal value x 10 mm. 0 is regarded as 1000 mm.)	-	0x64	0x64	0x64	XF	7F
		6							
		5							
		4							
		3							
		2							
		1							
		0							

11.26.9 0e033#

Address	Items	Bit No	Contents	Setting	Default			CSRC	
					Japan	North America	Europe	Command	Parameter
0e0330	Max. size of long original received (In the case of 600 dpi or less)	7	When the resolution for reception is 600 dpi, the size of a long original received that is regarded as an error (The maximum length is a decimal value x 10 mm. 0 is regarded as 1000 mm.)	-	0x64	0x64	0x64	XF	80
		6							
		5							
		4							
		3							
		2							
		1							
		0							
0e0331	Voice response output level adjustment	7		-	0x0e	0x0e	0x0e	XF	81
		6							
		5							
		4							
		3	Voice response volume (HEX) 0000: min - 1111: max						
		2							
		1							
		0							
0e0332	Monitor speaker (Received signal sound)	7		Utility Mode (0-4)	0x14	0x14	0x14	XF	82
		6							
		5							
		4	Speaker volume (HEX) (0-1F)						
		3							
		2							
		1							
		0							
0e0333 - 0e033d	Reserved area	7		-	ALL 0x00	ALL 0x00	ALL 0x00	XF	83 - 8D
		6							
		5							
		4							
		3							
		2							
		1							
		0							
0e033e	External phone off hook	7	External phone off hook determination threshold value current (unit: 1 mA, HEX)	-	0x00	0x00	0x00	XF	8E
		6							

Address	Items	Bit No	Contents	Setting	Default			CSRC	
					Japan	North America	Europe	Command	Parameter
	determination threshold value	5							
		4							
		3							
		2							
		1							
		0							

11.26.10 0f004#

Address	Items	Bit No	Contents	Setting	Default			CSRC	
					Japan	North America	Europe	Command	Parameter
0f0040	Reception main scan resolution capacity [0]	7	400dpi	-	0xaa	0xaa	0xaa	XH	20
		6	300dpi						
		5	200dpi						
		4							
		3	16pels/mm						
		2							
		1	8pels/mm						
		0							
0f0041	Reception main scan resolution capacity [1]	7		-	0x01	0x01	0x01	XH	21
		6							
		5							
		4							
		3							
		2	(1200dpi)						
		1	(800dpi)						
		0	600dpi						
0f0042	Reception sub scan resolution capacity [0]	7	400dpi	-	0xbb	0xbb	0xbb	XH	22
		6	300dpi						
		5	200dpi						
		4	100dpi						
		3	15.4 l/mm						
		2							
		1	7.7 l/mm						
		0	3.85 l/mm						
0f0043	Reception sub scan resolution capacity [1]	7		-	0x01	0x01	0x01	XH	23
		6							
		5							
		4							
		3							
		2	(1200dpi)						
		1	(800dpi)						
		0	600dpi						
0f0044	Reception coding system capacity	7		-	0x1f	0x1f	0x1f	XH	24
		6							
		5	(JPEG)						
		4	JBIG						
		3	MMR						
		2	MR						
		1	MH						
		0	THRU						
0f0045	Reception original width capacity	7		-	0x0e	0x0e	0x0e	XH	25
		6							
		5	(Legal)						
		4	(Letter)						
		3	A3						

Address	Items	Bit No	Contents	Setting	Default			CSRC	
					Japan	North America	Europe	Command	Parameter
		2	B4						
		1	A4						
		0	(A5)						
0f0046	Reception original length capacity	7		-	0x46	0x46	0x46	XH	26
		6	Unlimited						
		5	(Legal)						
		4	(Letter)						
		3							
		2	B4						
		1	A4						
		0	(A5)						
0f0047	Reception speed capacity [0]	7		-	0x1b	0x1b	0x1b	XH	27
		6							
		5							
		4	V.29-96						
		3	V.29-72						
		2							
		1	V.27-48						
		0	V.27-24						
0f0048	Reception speed capacity [1]	7	V.17-144	-	0xfc	0xfc	0xfc	XH	28
		6	V.17-120						
		5	V.17-96						
		4	V.17-72						
		3	V.33-144						
		2	V.33-120						
		1	(TCM-96)						
		0	(TCM-72)						
0f0049	Reception speed capacity [2]	7	V.34-192	-	0xff	0xff	0xff	XH	29
		6	V.34-168						
		5	V.34-144						
		4	V.34-120						
		3	V.34-96						
		2	V.34-72						
		1	V.34-48						
		0	V.34-24						
0f004a	Reception speed capacity [3]	7		-	0x3f	0x3f	0x3f	XH	2A
		6							
		5	V.34-336						
		4	V.34-312						
		3	V.34-288						
		2	V.34-264						
		1	V.34-240						
		0	V.34-216						
0f004b	Reception MSLT capacity	7	T3.85 or 200 x 100 dpi (0-40) ms unit	-	0x05	0x05	0x05	XH	2B
		6							
		5							
		4							
		3							
		2							
		1							
		0							
0f004c	Reception MSLT capacity	7	T7.7 or 200 x 200 dpi (0-40) ms unit	-	0x05	0x05	0x05	XH	2C
		6							
		5							
		4							
		3							

Address	Items	Bit No	Contents	Setting	Default			CSRC	
					Japan	North America	Europe	Command	Parameter
		2							
		1							
		0							
0f004d	Reception MSLT capacity	7	T11.55 or 300 x 300 dpi (0-40) ms unit	-	0x05	0x05	0x05	XH	2D
		6							
		5							
		4							
		3							
		2							
		1							
		0							
0f004e	Reception MSLT capacity	7	T15.4 or 400 x 400 dpi or 600 x 600 dpi (0-40) ms unit	-	0x05	0x05	0x05	XH	2E
		6							
		5							
		4							
		3							
		2							
		1							
		0							
0f004f	Reception ECM capacity	7		-	0x01	0x01	0x01	XH	2F
		6							
		5							
		4							
		3							
		2							
		1							
		0	ECM reception capacity 0: OFF, 1: ON						

11.26.11 0f005#

Address	Items	Bit No	Contents	Setting	Default			CSRC	
					Japan	North America	Europe	Command	Parameter
0f0050	Reception protocol capacity	7		-	0x11	0x11	0x11	XH	30
		6							
		5							
		4	V8/V34						
		3							
		2							
		1							
		0	G3S						
0f0051	Reception option frame capacity	7		-	0x07	0x07	0x07	XH	31
		6							
		5							
		4	(BFT)						
		3	(BTM)						
		2	PWD						
		1	(SEP)						
		0	SUB						
0f0052 - 0f005f	Reserved area	7		-	ALL 0x00	ALL 0x00	ALL 0x00	XH	32 - 3F
		6							
		5							
		4							
		3							
		2							
		1							

Address	Items	Bit No	Contents	Setting	Default			CSRC	
					Japan	North America	Europe	Command	Parameter
		0							

11.26.12 10004#

Address	Items	Bit No	Contents	Setting	Default			CSRC	
					Japan	North America	Europe	Command	Parameter
100040	Transmission main scan line resolution instruction [0]	7	400dpi	-	0x22	0x22	0x22	X2	60
		6	300dpi						
		5	200dpi						
		4							
		3	16pels/mm						
		2							
		1	8pels/mm						
		0							
100041	Transmission main scan line resolution instruction [1]	7		-	0x01	0x01	0x01	X2	61
		6							
		5							
		4							
		3							
		2	1200dpi						
		1	800dpi						
		0	600dpi						
100042	Transmission sub scanning resolution instruction [0]	7	400dpi	-	0x11	0x11	0x11	X2	62
		6	300dpi						
		5	200dpi						
		4	100dpi						
		3	15.4 l/mm						
		2							
		1	7.7 l/mm						
		0	3.85 l/mm						
100043	Transmission sub scanning resolution instruction [1]	7		-	0x01	0x01	0x01	X2	63
		6							
		5							
		4							
		3							
		2	1200dpi						
		1	800dpi						
		0	600dpi						
100044	Transmission coding method instruction	7		-	0x1f	0x1f	0x1f	X2	64
		6							
		5	(JPEG)						
		4	JBIG						
		3	MMR						
		2	MR						
		1	MH						
		0	THRU						
100045	Transmission document width instruction	7		-	0x0e	0x0e	0x0e	X2	65
		6							
		5	(Legal)						
		4	(Letter)						
		3	A3						
		2	B4						
		1	A4						
		0	(A5)						
100046	Transmission document	7		-	0x46	0x46	0x46	X2	66
		6	Unlimited						

Address	Items	Bit No	Contents	Setting	Default			CSRC	
					Japan	North America	Europe	Command	Parameter
	length instruction	5	(Legal)						
		4	(Letter)						
		3							
		2	B4						
		1	A4						
		0	(A5)						
100047	Transmission speed instruction [0]	7		-	0x1b	0x1b	0x1b	X2	67
		6							
		5							
		4	V.29-96						
		3	V.29-72						
		2							
		1	V.27-48						
		0	V.27-24						
100048	Transmission speed instruction [1]	7	V.17-144	-	0xf0	0xf0	0xf0	X2	68
		6	V.17-120						
		5	V.17-96						
		4	V.17-72						
		3	V.33-144						
		2	V.33-120						
		1	(TCM-96)						
		0	(TCM-72)						
100049	Transmission speed instruction [2]	7	V.34-192	-	0xff	0xff	0xff	X2	69
		6	V.34-168						
		5	V.34-144						
		4	V.34-120						
		3	V.34-96						
		2	V.34-72						
		1	V.34-48						
		0	V.34-24						
10004a	Transmission speed instruction [3]	7		-	0x3f	0x3f	0x3f	X2	6A
		6							
		5	V.34-336						
		4	V.34-312						
		3	V.34-288						
		2	V.34-264						
		1	V.34-240						
		0	V.34-216						
10004b	Transmission MSLT instruction	7	T3.85 or 200 x 100dpi (0-40) ms unit	-	0x05	0x05	0x05	X2	6B
		6							
		5							
		4							
		3							
		2							
		1							
		0							
10004c	Transmission MSLT instruction	7	T7.7 or 200 x 200dpi (0-40) ms unit	-	0x05	0x05	0x05	X2	6C
		6							
		5							
		4							
		3							
		2							
		1							
		0							
10004d	Transmission MSLT instruction	7	T11.55 or 300 x 300dpi (0-40) ms unit	-	0x05	0x05	0x05	X2	6D
		6							

Address	Items	Bit No	Contents	Setting	Default			CSRC	
					Japan	North America	Europe	Command	Parameter
		5							
		4							
		3							
		2							
		1							
		0							
10004e	Transmission MSLT instruction	7	T15.4 or 400 x 400dpi or 600 x 600dpi (0-40) ms unit	-	0x05	0x05	0x05	X2	6E
		6							
		5							
		4							
		3							
		2							
		1							
		0							
10004f	Transmission ECM instruction	7		-	0x01	0x01	0x01	X2	6F
		6							
		5							
		4							
		3							
		2							
		1	ECM transmission frame size 0: 256 1: 64						
		0	ECM transmission instruction 0: OFF 1: ON						

11.26.13 10005#

Address	Items	Bit No	Contents	Setting	Default			CSRC	
					Japan	North America	Europe	Command	Parameter
100050	Transmission protocol instruction	7		-	0x11	0x11	0x11	XH	70
		6							
		5							
		4	V8/V34						
		3							
		2							
		1							
		0	G3S						
100051	Transmission option frame instruction	7		-	0x00	0x00	0x00	XH	71
		6							
		5							
		4	(BFT)						
		3	(BTM)						
		2	PWD						
		1	(SEP)						
		0	SUB						
100052 - 10005f	Reserved area	7		-	ALL 0x00	ALL 0x00	ALL 0x00	XH	72 - 7F
		6							
		5							
		4							
		3							
		2							
		1							
		0							

11.27 FAX setting (Address parameter list: for line 4)

11.27.1 0e03c#

Address	Items	Bit No	Contents	Setting	Default			CSRC	
					Japan	North America	Europe	Command	Parameter
0e03c0	Transmission ATT	7	Tone signal/FSK transmission ATT (HEX) 1 dBm every (0 to -15dBm)	Utility Mode Special Setting	0xaa	0xaa	0xaa	XG	00
		6							
		5							
		4							
		3	High-speed signal transmission ATT (HEX) 1 dBm every (0 to -15dBm)						
		2							
		1							
		0							
0e03c1	CED Transmission ATT	7		Utility Mode Special Setting (0-3)	0x0a	0x0a	0x0a	XG	01
		6							
		5							
		4							
		3	CED/ANS transmission ATT (HEX) 1 dBm every (0 to -15dBm)						
		2							
		1							
		0							
0e03c2	CD/SED ON level	7		Utility Mode Special Setting (0,1)	0x03	0x03	0x03	XG	02
		6							
		5							
		4							
		3							
		2							
		1	CD/SED ON level [dBm] 00: -33, 01: -38, 10: -43, 11: -48						
		0							
0e03c3	Transmission cable amplitude EQL	7		Utility Mode Special Setting (4,5)	0x00	0x00	0x00	XG	03
		6							
		5	Transmission cable EQL0 00: 0dB, 01: 4dB, 10: 8dB, 11: 12dB						
		4							
		3							
		2							
		1							
		0							
0e03c4	Reception cable amplitude EQL	7		Utility Mode Special Setting (4,5)	0x00	0x00	0x00	XG	04
		6							
		5	Reception cable EQL 00: 0dB, 01: 4dB, 10: 8dB, 11: 12dB						
		4							
		3							
		2							
		1							
		0							
0e03c5	TEL/FAX switching	7	Time from vocal response to RBT transmission (CNG detection waiting time 2) 0: 4 sec. 1: 2 sec.	Utility Mode Special Setting (4,5)	0x00	0x00	0x00	XG	05
		6	Time from reception to voice response transmission (CNG detection waiting time 1) 0: 2 sec. 1: 4 sec.						
		5	TEL/FAX switching mode 0: Disabled 1: Enabled						
		4	External telephone no ringing setting 0: Disabled 1: Enabled (disconnected)						

Address	Items	Bit No	Contents	Setting	Default			CSRC	
					Japan	North America	Europe	Command	Parameter
		3	TEL/FAX switching ON response details 0: Voice response + RBT transmission 1: RBT transmission only						
		2							
		1							
		0							
0e03c6	Ring Back Tone parameter	7	RBT form 000: No, 001: Japan, 010: US, 011: UK, 100: Germany, 101 - 111: Others	Utility Mode Special Setting (0-3,5-7)	0x00	0x00	0x00	XG	06
		6							
		5							
		4	CED transmitted upon TEL/FAX switching						
		3	RBT transmission level (HEX) 0 to -15 dBm						
		2							
		1							
		0							
0e03c7	Operated in international mode	7	DIS waiting frequency 0: Always once, 1: Twice in overseas communication	Utility Mode Special Setting (6,7)	0x40	0x40	0x40	XG	07
		6	Overseas communication 0: No, 1: Yes						
		5							
		4							
		3							
		2							
		1							
		0							
0e03c8	Starting speed in international mode (V29 modem)	7		Utility Mode Special Setting (0,1,3,4)	0x02	0x02	0x02	XG	08
		6							
		5							
		4	9600/V.29bps						
		3	7200/V.29bps						
		2							
		1	4800/V.27bps						
		0	2400/V.27bps						
0e03c9	Starting speed in international mode (V17 or V33 modem)	7	14400bps/V.17	Utility Mode Special Setting (4-7)	0x10	0x10	0x10	XG	09
		6	12000bps/V.17						
		5	9600bps/V.17						
		4	7200bps/V.17						
		3							
		2							
		1							
		0							
0e03ca	Starting speed in international mode (V34)	7	33600bps/V.34	Utility Mode Special Setting	0x20	0x20	0x20	XG	0A
		6	31200bps/V.34						
		5	28800bps/V.34						
		4	26400bps/V.34						
		3	24000bps/V.34						
		2	21600bps/V.34						
		1	19200bps/V.34						
		0	16800bps/V.34						
0e03cb	CD OFF timer	7	CD OFF timer (unit: 100 ms, HEX)	-	0x14	0x14	0x14	XG	0B
		6							
		5							
		4							
		3							
		2							

Address	Items	Bit No	Contents	Setting	Default			CSRC	
					Japan	North America	Europe	Command	Parameter
		1							
		0							
0e03cc	CD ON integration time	7	CD ON integration time (unit: 100 ms, HEX)	-	0x06	0x06	0x06	XG	0C
		6							
		5							
		4							
		3							
		2							
		1							
		0							
0e03cd	Symbol speed maximum allowable value	7	V34 control ch data rate 0: 1200, 1: 2400	Utility Mode Special Setting (0-3,7)	0x05	0x05	0x05	XG	0D
		6							
		5							
		4							
		3	Max. allowable symbol speed 0000: 2400, 0001: Reserved, 0010: 2800 0011: 3000, 0100: 3200, 0101: 3429						
		2							
		1							
		0							
0e03ce	Symbol rate selection criteria	7	Attenuation distortion property (-6dB to +6dB) 0000:-6, 0001:-5, 0010:-4, 0011:-3, 0100:-2, 0101:-1, 0110:0, 0111:+1, 1000:+2, 1001:+3, 1010:+4, 1011:+5, 1100:+6	Utility Mode Special Setting	0x66	0x66	0x66	XG	0E
		6							
		5							
		4							
		3	Band end S/N (-6dB to +6dB) 0000:-6, 0001:-5, 0010:-4, 0011:-3, 0100:-2, 0101:-1, 0110:0, 0111:+1, 1000:+2, 1001:+3, 1010:+4, 1011:+5, 1100:+6						
		2							
		1							
		0							
0e03cf	Primary channel data rate selection criteria	7	V.34 reception gain correction (-4.0dB to +3.5dB) 0000:0, 0001:+0.5, 0010:+1.0, 0011:+1.5, 0100:+2.0, 0101:+2.5, 0110:+3.0, 0111:+3.5, 1000:-4.0, 1001:-3.5, 1010:-3.0, 1011:-2.5, 1100:-2.0, 1101:-1.5, 1110:-1.0, 1111:-0.5	Utility Mode Special Setting (0-3)	0x08	0x08	0x08	XG	0F
		6							
		5							
		4							
		3	Primary channel data rate selection criteria (-8dB to +7dB) 0000:-8, 0001:-7, 0010:-6, 0011:-5, 0100:-4, 0101:-3, 0110:-2, 0111:-1, 1000:0, 1001:+1, 1010:+2, 1011:+3, 1100:+4, 1101:+5, 1110:+6, 1111:+7						
		2							
		1							
		0							

11.27.2 0e03d#

Address	Items	Bit No	Contents	Setting	Default			CSRC	
					Japan	North America	Europe	Command	Parameter
0e03d0	V34 primary channel fall back	7	No. of fall back frame errors (Hex)	-	0x03	0x03	0x03	XG	10
		6							
		5							
		4							
		3							
		2							
		1							
		0							
0e03d1	V34 control channel fall back	7	Fall back EQMVAL value (HEX)	-	0x40	0x40	0x40	XG	11
		6							
		5							
		4							
		3							

Address	Items	Bit No	Contents	Setting	Default			CSRC	
					Japan	North America	Europe	Command	Parameter
		2							
		1							
		0							
0e03d2	V34 OFF reception - V34 OFF time after error	7	Timer value after V34 reception error to reset the V34 OFF reception (min., HEX) (Enabled only when the transmission side cannot be specified)	-	0x0a	0x0a	0x0a	XG	12
		6							
		5							
		4							
		3							
		2							
		1							
		0							
0e03d3	V34 OFF reception - No. of successful consecutive V17 reception times to reset V34 OFF	7	No. of successful consecutive V17 reception times to reset V34 OFF reception after V34 reception error (No. of times, HEX) (Enabled only when the transmission side can be specified with Caller ID)	-	0x0a	0x0a	0x0a	XG	13
		6							
		5							
		4							
		3							
		2							
		1							
		0							
0e03d4	V34 OFF reception - Function switch (disabled)	7	V34 OFF function at manual reception 0: Enabled, 1: Disabled	-	0x00	0x02	0x02	XG	14
		6							
		5							
		4							
		3							
		2							
		1	V.34 OFF reset mode = No. of successful consecutive V.17 reception times (ID specified) 0: Enabled, 1: Disabled						
		0	V.34 OFF reset mode = time (ID cannot be specified) 0: Enabled, 1: Disabled						
0e03d5	JBIG parameter	7		-	0x01	0x01	0x01	XG	15
		6							
		5							
		4							
		3							
		2							
		1	Use of following FP JBIG option LO size at reduction 0: No, 1: Yes						
		0	JBIG optional L0 capacity 0: No, 1: Yes						
0e03d6 - 0e03d9	JBIG L0 size	7	JBIG optional LO size used for reduction (hex) (setting rangeF0x01 - 0xffffffff) [0] = HH, [1] = HL, [2] = LH, [3] = LL	-	0x00 0x00 0x00 0x80	0x00 0x00 0x00 0x80	0x00 0x00 0x00 0x80	XG	16 - 19
		6							
		5							
		4							
		3							
		2							
		1							
		0							
0e03da	JBIG OFF reception - Function switch (disabled)	7		-	0x00	0x00	0x00	XG	1A
		6							
		5							

Address	Items	Bit No	Contents	Setting	Default			CSRC	
					Japan	North America	Europe	Command	Parameter
		4							
		3							
		2							
		1	JBIG OFF function at A3 high-definition reception (DIS re-transmission) 0: OFF, 1: ON						
		0	JBIG OFF function after JBIG reception error 0: Enabled, 1: Disabled						
0e03db	JBIG OFF reception - JBIG OFF time after error	7	Timer value after JBIG reception error to reset JBIG OFF reception (min., HEX) (10 min. in case of 0)	-	0x0a	0x0a	0x0a	XG	1B
		6							
		5							
		4							
		3							
		2							
		1							
		0							
0e03dc	PBX dial tone detection frequency upper limit	7	PBX dial tone detection frequency upper limit (unit: 10 Hz, HEX)	-	0x31	0x00	0x00	XG	1C
		6							
		5							
		4							
		3							
		2							
		1							
		0							
0e03dd	PBX dial tone detection frequency lower limit	7	PBX dial tone detection frequency lower limit (unit: 10 Hz, HEX)	-	0x1f	0x00	0x00	XG	1D
		6							
		5							
		4							
		3							
		2							
		1							
		0							
0e03de	PBX dial tone detection time	7	PBX dial tone detection time or max. ON time value (unit: 20 ms, HEX)	-	0x32	0x00	0x00	XG	1E
		6							
		5							
		4							
		3							
		2							
		1							
		0							
0e03df	PBX dial tone ON time min. value	7	PBX dial tone ON time min. value (unit: 20 ms, HEX)	-	0x00	0x00	0x00	XG	1F
		6							
		5							
		4							
		3							
		2							
		1							
		0							

11.27.3 0e03e#

Address	Items	Bit No	Contents	Setting	Default			CSRC	
					Japan	North America	Europe	Command	Parameter
0e03e0	PBX dial tone OFF time max. value	7	PBX dial tone OFF time max. value (unit: 20 ms, HEX)	-	0x00	0x00	0x00	XG	20
		6							
		5							
		4							
		3							
		2							
		1							
		0							
0e03e1	PBX dial tone OFF time min. value	7	PBX dial tone OFF time min. value (unit: 20 ms, HEX)	-	0x00	0x00	0x00	XG	21
		6							
		5							
		4							
		3							
		2							
		1							
		0							
0e03e2	PBX dial tone waiting time	7	PBX dial tone waiting time or pre-pause time (unit: 1 sec, HEX)	-	0x03	0x03	0x03	XG	22
		6							
		5							
		4							
		3							
		2							
		1							
		0							
0e03e3	PBX dial tone instantaneous break detection time	7	Instantaneous break detection time (unit: 20 ms, HEX) or tone detection frequency (times, HEX)	-	0x00	0x00	0x00	XG	23
		6							
		5							
		4							
		3							
		2							
		1							
		0							
0e03e4	1st dial tone detection frequency upper limit	7	1st dial tone detection frequency upper limit (unit: 10 Hz, HEX)	-	0x31	0x35	0x34	XG	24
		6							
		5							
		4							
		3							
		2							
		1							
		0							
0e03e5	1st dial tone detection frequency lower limit	7	1st dial tone detection frequency lower limit (unit: 10 Hz, HEX)	-	0x1f	0x23	0x1c	XG	25
		6							
		5							
		4							
		3							
		2							
		1							
		0							
0e03e6	1st dial tone detection time	7	1st dial tone detection time or max. ON time value (unit: 20 ms, HEX)	-	0x32	0x32	0x1a	XG	26
		6							
		5							
		4							
		3							
		2							
		1							

Address	Items	Bit No	Contents	Setting	Default			CSRC	
					Japan	North America	Europe	Command	Parameter
		0							
0e03e7	1st dial tone ON time min. value	7	1st dial tone ON time min. value (unit: 20 ms, HEX)	-	0x00	0x00	0x00	XG	27
		6							
		5							
		4							
		3							
		2							
		1							
		0							
0e03e8	1st dial tone OFF time max. value	7	1st dial tone OFF time max. value (unit: 20 ms, HEX)	-	0x00	0x00	0x00	XG	28
		6							
		5							
		4							
		3							
		2							
		1							
		0							
0e03e9	1st dial tone OFF time min. value	7	1st dial tone OFF time min. value (unit: 20 ms, HEX)	-	0x00	0x00	0x00	XG	29
		6							
		5							
		4							
		3							
		2							
		1							
		0							
0e03ea	1st dial tone waiting time	7	1st dial tone waiting time or pre-pause time (unit: 1 sec, HEX)	-	0x03	0x03	0x04	XG	2A
		6							
		5							
		4							
		3							
		2							
		1							
		0							
0e03eb	1st dial tone instantaneous break detection time	7	Instantaneous break detection time (unit: 20 ms, HEX) or tone detection frequency (times, HEX)	-	0x00	0x00	0x05	XG	2B
		6							
		5							
		4							
		3							
		2							
		1							
		0							
0e03ec	2nd dial tone detection frequency upper limit	7	2nd dial tone detection frequency upper limit (unit: 10 Hz, HEX)	-	0x31	0x00	0x00	XG	2C
		6							
		5							
		4							
		3							
		2							
		1							
		0							
0e03ed	2nd dial tone detection frequency lower limit	7	2nd dial tone detection frequency lower limit (unit: 10 Hz, HEX)	-	0x1f	0x00	0x00	XG	2D
		6							
		5							
		4							
		3							
		2							
		1							

Address	Items	Bit No	Contents	Setting	Default			CSRC	
					Japan	North America	Europe	Command	Parameter
		0							
0e03ee	2nd dial tone detection time	7	2nd dial tone detection time or max. ON time value (unit: 20 ms, HEX)	-	0x08	0x00	0x00	XG	2E
		6							
		5							
		4							
		3							
		2							
		1							
		0							
0e03ef	2nd dial tone ON time min. value	7	2nd dial tone ON time min. value (unit: 20 ms, HEX)	-	0x02	0x00	0x00	XG	2F
		6							
		5							
		4							
		3							
		2							
		1							
		0							

11.27.4 0e03f#

Address	Items	Bit No	Contents	Setting	Default			CSRC	
					Japan	North America	Europe	Command	Parameter
0e03f0	2nd dial tone OFF time max. value	7	2nd dial tone OFF time max. value (unit: 20 ms, HEX)	-	0x0a	0x00	0x00	XG	30
		6							
		5							
		4							
		3							
		2							
		1							
		0							
0e03f1	2nd dial tone OFF time min. value	7	2nd dial tone OFF time min. value (unit: 20 ms, HEX)	-	0x04	0x00	0x00	XG	31
		6							
		5							
		4							
		3							
		2							
		1							
		0							
0e03f2	2nd dial tone waiting time	7	2nd dial tone waiting time or pre-pause time (unit: 1 sec, HEX)	-	0x03	0x03	0x03	XG	32
		6							
		5							
		4							
		3							
		2							
		1							
		0							
0e03f3	2nd dial tone instantaneous break detection time	7	Instantaneous break detection time (unit: 20 ms, HEX) or tone detection frequency (times, HEX)	-	0x03	0x00	0x00	XG	33
		6							
		5							
		4							
		3							
		2							
		1							
		0							
0e03f4	3rd dial tone detection	7	3rd dial tone detection frequency upper limit (unit: 10 Hz, HEX)	-	0x00	0x00	0x00	XG	34
		6							

Address	Items	Bit No	Contents	Setting	Default			CSRC	
					Japan	North America	Europe	Command	Parameter
	frequency upper limit	5							
		4							
		3							
		2							
		1							
		0							
0e03f5	3rd dial tone detection frequency lower limit	7	3rd dial tone detection frequency lower limit (unit: 10 Hz, HEX)	-	0x00	0x00	0x00	XG	35
		6							
		5							
		4							
		3							
		2							
		1							
		0							
0e03f6	Busy tone detection frequency upper limit	7	Detection frequency upper limit (unit: 10 Hz, HEX)	-	0x31	0x00	0x00	XG	36
		6							
		5							
		4							
		3							
		2							
		1							
		0							
0e03f7	Busy tone detection frequency lower limit	7	Detection frequency lower limit (unit: 10 Hz, HEX)	-	0x1f	0x00	0x00	XG	37
		6							
		5							
		4							
		3							
		2							
		1							
		0							
0e03f8	Busy tone ON time max. value	7	Busy tone ON time max. value (unit: 20 ms, HEX)	-	0x1e	0x00	0x00	XG	38
		6							
		5							
		4							
		3							
		2							
		1							
		0							
0e03f9	Busy tone ON time min. value	7	Busy tone ON time min. value (unit: 20 ms, HEX)	-	0x14	0x00	0x00	XG	39
		6							
		5							
		4							
		3							
		2							
		1							
		0							
0e03fa	Busy tone OFF time max. value	7	Busy tone OFF time max. value (unit: 20 ms, HEX)	-	0x1e	0x00	0x00	XG	3A
		6							
		5							
		4							
		3							
		2							
		1							
		0							
0e03fb	Busy tone OFF time min. value	7	Busy tone OFF time min. value (unit: 20 ms, HEX)	-	0x14	0x00	0x00	XG	3B
		6							

Address	Items	Bit No	Contents	Setting	Default			CSRC	
					Japan	North America	Europe	Command	Parameter
		5							
		4							
		3							
		2							
		1							
		0							
0e03fc	Ringer detection frequency upper limit	7	Ringer detection frequency upper limit (unit: 1 Hz, HEX)	-	0x46	0x46	0x46	XG	3C
		6							
		5							
		4							
		3							
		2							
		1							
		0							
0e03fd	Ringer detection frequency lower limit	7	Ringer detection frequency lower limit (unit: 1 Hz, HEX)	-	0x0c	0x0c	0x0c	XG	3D
		6							
		5							
		4							
		3							
		2							
		1							
		0							
0e03fe	Ringer ON time max. value	7	Ringer ON time max. value (unit: 20 ms, HEX)	-	0x00	0x00	0x00	XG	3E
		6							
		5							
		4							
		3							
		2							
		1							
		0							
0e03ff	Ringer ON time min. value	7	Ringer ON time min. value (unit: 20 ms, HEX)	-	0x0a	0x0a	0x08	XG	3F
		6							
		5							
		4							
		3							
		2							
		1							
		0							

11.27.5 0e040#

Address	Items	Bit No	Contents	Setting	Default			CSRC	
					Japan	North America	Europe	Command	Parameter
0e0400	Ringer OFF time max. value	7	Ringer OFF time max. value (unit: 100 ms, HEX)	-	0x3c	0x3c	0x46	XG	40
		6							
		5							
		4							
		3							
		2							
		1							
		0							
0e0401	Ringer OFF time min. value	7	Ringer OFF time min. value (unit: 100 ms, HEX)	Utility Mode Special Setting	0x02	0x00	0x00	XG	41
		6							
		5							
		4							
		3							

Address	Items	Bit No	Contents	Setting	Default			CSRC	
					Japan	North America	Europe	Command	Parameter
		2							
		1							
		0							
0e0402	PB dial signal transmission time	7	PB dial signal transmission time (unit: 5 ms, HEX)	-	0x15	0x19	0x15	XG	42
		6							
		5							
		4							
		3							
		2							
		1							
		0							
0e0403	PB dial inter-digit pause	7	PB dial inter-digit pause time (unit: 5 ms, HEX)	-	0x11	0x15	0x11	XG	43
		6							
		5							
		4							
		3							
		2							
		1							
		0							
0e0404	10 pps pulse dial break rate	7	10 pps pulse dial break rate (%, HEX)	-	0x44	0x3d	0x3d	XG	44
		6							
		5							
		4							
		3							
		2							
		1							
		0							
0e0405	10 pps pulse dial inter-digit pause	7	10 pps pulse dial inter digit pause (unit: 10 ms, HEX)	-	0x68	0x68	0x5e	XG	45
		6							
		5							
		4							
		3							
		2							
		1							
		0							
0e0406	20 pps pulse dial break rate	7	20 pps pulse dial break rate (%, HEX)	-	0x44	0x3d	0x3d	XG	46
		6							
		5							
		4							
		3							
		2							
		1							
		0							
0e0407	20 pps pulse dial inter-digit pause	7	20 pps pulse dial inter-digit pause (unit: 10 ms, HEX)	-	0x59	0x40	0x5c	XG	47
		6							
		5							
		4							
		3							
		2							
		1							
		0							
0e0408	PB signal transmission level	7	PB signal transmission level (unit: 1 dBm, HEX)	Utility Mode Special Setting	0x0a	0x0a	0x06	XG	48
		6							
		5							
		4							
		3							

Address	Items	Bit No	Contents	Setting	Default			CSRC	
					Japan	North America	Europe	Command	Parameter
		2							
		1							
		0							
0e0409	PB signal level difference (HL)	7	PB signal level difference (HL) (unit: 0.5 dBm, HEX)	Utility Mode Special Setting	0x04	0x04	0x04	XG	49
		6							
		5							
		4							
		3							
		2							
		1							
		0							
0e040a	DCLOOP integration time at CML OFF	7	DCLOOP integration time at CML relay OFF (unit: 5 ms, HEX) (Lower limit 20 ms)	-	0x50	0x50	0x50	XG	4A
		6							
		5							
		4							
		3							
		2							
		1							
		0							
0e040b	DCLOOP integration time at CML ON	7	DCLOOP integration time at CML relay ON (unit: 5 ms, HEX) (Lower limit 20 ms)	-	0x10	0x10	0x10	XG	4B
		6							
		5							
		4							
		3							
		2							
		1							
		0							
0e040c	Pause time	7		Utility Mode Special Setting (0-2)	0x01	0x01	0x01	XG	4C
		6							
		5							
		4							
		3							
		2	Pause time (unit:sec, HEX)						
		1							
		0							
0e040d	DC-LOOP check mode	7	DC-LOOP check 0: No, 1: Always	Utility Mode Special Setting (6,7)	0x00	0x00	0x00	XG	4D
		6							
		5							
		4							
		3							
		2							
		1							
		0							
0e040e	DC-LOOP waiting time	7	DC-LOOP waiting time (unit: 100 ms, HEX)	-	0x00	0x00	0x00	XG	4E
		6							
		5							
		4							
		3							
		2							
		1							
		0							
0e040f	DC-LOOP instantaneous break allowable time (ph.A)	7	DC-LOOP instantaneous break allowable time (unit: 10 ms, HEX) (at the time of calling, CML ON to end of dialing)	-	0x00	0x00	0x00	XG	4F
		6							
		5							
		4							

Address	Items	Bit No	Contents	Setting	Default			CSRC	
					Japan	North America	Europe	Command	Parameter
		3							
		2							
		1							
		0							

11.27.6 0e041#

Address	Items	Bit No	Contents	Setting	Default			CSRC	
					Japan	North America	Europe	Command	Parameter
0e0410	DC-LOOP instantaneous break allowable time (ph.B)	7	DC-LOOP instantaneous break allowable time (unit: 10ms, HEX) (after completion of dialing and after CML ON at the time of reception)	-	0x00	0x00	0x00	XG	50
		6							
		5							
		4							
		3							
		2							
		1							
		0							
0e0411	Dial mode RING DET mode	7		Utility Mode (0,1) Utility Mode Special Setting (4,5)	0x12	0x10	0x10	XG	51
		6							
		5	RING detection mode 01: No. of times, 10: Time						
		4							
		3	Pulse format 00: General, 01: SW, 10: NO						
		2							
		1	Dialing method 00: PB, 01: 10pps, 10: 20pps, 11: 16pps						
		0							
0e0412	1st/2nd DT detection parameter	7		-	0x00	0x00	0x00	XG	52
		6							
		5							
		4							
		3	At 2nd DT detection DP dialing only						
		2							
		1							
		0	1st DT2 type						
0e0413	Tone detection	7		Utility Mode Special Setting (4,5)	0x11	0x01	0x01	XG	53
		6							
		5	1300Hz 0: No, 1: Yes						
		4	BusyTone 0: No, 1: Yes						
		3	PBX DT 0: No, 1: Yes						
		2	3rd Dt 0: No, 1: Yes						
		1	2nd DT 0: No, 1: Yes						
		0	1st DT 0: No, 1: Yes						
0e0414	No. of busy tone detection times	7	No. of busy tone detection times (HEX)	Utility Mode Special Setting	0x02	0x00	0x00	XG	54
		6							
		5							
		4							
		3							
		2							

Address	Items	Bit No	Contents	Setting	Default			CSRC	
					Japan	North America	Europe	Command	Parameter
		1							
		0							
0e0415	No. of RING detection times	7	No. of RING detection times (times, HEX)	Utility Mode	0x02	0x02	0x02	XG	55
		6							
		5							
		4							
		3							
		2							
		1							
		0							
0e0416	RING detection time	7	Ring detection time (sec, HEX)	Utility Mode Special Setting	0x06	0x06	0x06	XG	56
		6							
		5							
		4							
		3							
		2							
		1							
		0							
0e0417	Remote station response waiting time	7	Remote station response waiting time at calling (unit:sec, HEX)	Utility Mode Special Setting	0x37	0x37	0x37	XG	57
		6							
		5							
		4							
		3							
		2							
		1							
		0							
0e0418	Answering machine function	7	Answering machine CNG detection time (unit: 10 sec, HEX) (1-7)	Utility Mode Special Setting (4)	0x64	0x64	0x64	XG	58
		6							
		5							
		4	Answer mode 0: OFF, 1: ON						
		3	Answering machine DC-LOOP detection time (unit: 5 sec, HEX) (1-15)						
		2							
		1							
		0							
0e0419 - 0e041a	Remote reception password	7	ASCII[2]	Utility Mode	0x2a 0x20	0x2a 0x20	0x2a 0x20	XG	59 - 5A
		6							
		5							
		4							
		3							
		2							
		1							
		0							
0e041b	RBT transmission time	7	RingBackTone signal transmission time (unit: 1000 ms, HEX)	-	0x14	0x14	0x14	XG	5B
		6							
		5							
		4							
		3							
		2							
		1							
		0							
0e041c	CAR signal ON time max. value	7	CAR ON time max. value (unit: 20 ms, HEX)	-	0x28	0x00	0x00	XG	5C
		6							
		5							
		4							
		3							

Address	Items	Bit No	Contents	Setting	Default			CSRC	
					Japan	North America	Europe	Command	Parameter
		2							
		1							
		0							
0e041d	CAR signal ON time min. value	7	CAR ON time min. value (unit: 20 ms, HEX)	-	0x0a	0x00	0x00	XG	5D
		6							
		5							
		4							
		3							
		2							
		1							
		0							
0e041e	CAR signal OFF time max. value	7	CAR OFF time max. value (unit: 20 ms, HEX)	-	0x28	0x00	0x00	XG	5E
		6							
		5							
		4							
		3							
		2							
		1							
		0							
0e041f	CAR signal OFF time min. value	7	CAR OFF time min. value (unit: 20 ms, HEX)	-	0x0a	0x00	0x00	XG	5F
		6							
		5							
		4							
		3							
		2							
		1							
		0							

11.27.7 0e042#

Address	Items	Bit No	Contents	Setting	Default			CSRC	
					Japan	North America	Europe	Command	Parameter
0e0420	No. of CAR signal detection times	7	No. of CAR (information reception terminal start signal) detection times (times, HEX)	-	0x01	0x00	0x00	XG	60
		6							
		5							
		4							
		3							
		2							
		1							
		0							
0e0421	Caller ID signal waiting time	7	ID waiting time after Caller ID/DIAL IN primary response (unit 1000 ms, HEX)	-	0x05	0x00	0x00	XG	61
		6							
		5							
		4							
		3							
		2							
		1							
		0							
0e0422	Remote reception password entry waiting time	7	Password signal (DTMF) detection waiting time (unit: 100 ms, HEX)	-	0x14	0x14	0x14	XG	62
		6							
		5							
		4							
		3							
		2							
		1							
		0							

Address	Items	Bit No	Contents	Setting	Default			CSRC	
					Japan	North America	Europe	Command	Parameter
0e0423	Normal/number display automatic line distinction function	7	Automatic distinction function 0: OFF 1: ON	-	0x83	0x00	0x00	XG	63
		6							
		5							
		4							
		3	V23 signal detection waiting time when distinguished (x1 sec, HEX)						
		2							
		1							
		0							
0e0424	Monitor speaker (Transmission signal sound)	7	PB tone monitor at off-hook	Utility Mode (0-6)	0x10	0x10	0x10	XG	64
		6	Monitor speaker in communication 00: OFF 11: ON						
		5							
		4	Speaker volume (HEX) (0-1F)						
		3							
		2							
		1							
		0							
0e0425 - 0e042f	Numeric ID [20]	7	ASCII [20] When ID is less than 20 digits, left-justify and insert a space at the head. (No NULL terminator)	Utility Mode	ALL 0x20	ALL 0x20	ALL 0x20	XG	65 - 6F
		6							
		5							
		4							
		3							
		2							
		1							
		0							

11.27.8 0e043#

Address	Items	Bit No	Contents	Setting	Default			CSRC	
					Japan	North America	Europe	Command	Parameter
0e0430 - 0e0438	Numeric ID [20]	7	ASCII [20] When ID is less than 20 digits, left-justify and insert a space at the head. (No NULL terminator)	Utility Mode	ALL 0x20	ALL 0x20	ALL 0x20	XG	70 - 78
		6							
		5							
		4							
		3							
		2							
		1							
		0							
0e0439	PBX connection mode	7		Utility Mode (0-3)	0x0f	0x0f	0x0f	XG	79
		6							
		5							
		4							
		3	PBX call 0000 - 1001: Ten-key, 1011: Reserved, 1100: Reserved, 1101: Reserved 1110: Reserved, 1111: PBX unconnected						
		2							
		1							
		0							
0e043a	Protocol monitor	7		Utility Mode (5)	0x00	0x00	0x00	XG	7A
		6							
		5	TEL/FAX switching RBT monitor sound 0: OFF, 1: ON						
		4	Speaker sounding disabled when off-hook key is pressed 1: Disabled, 0: Not disabled						

Address	Items	Bit No	Contents	Setting	Default			CSRC	
					Japan	North America	Europe	Command	Parameter
		3							
		2							
		1							
		0							
0e043b	Reception function (disabled)	7		Utility Mode Special Setting (0-4)	0x3f	0x3f	0x3f	XG	7B
		6							
		5	Remote station name display (name display) (variable) 0: Enabled, 1: Disabled						
		4	Reserved (fixed at 1)						
		3	Remote station No./name display (variable) 0: Enabled, 1: Disabled						
		2	Closed Network RX (variable) 0: Valid 1: Prohibited Be sure to set the same value as that for the main line. (Impossible of each setting)						
		1	Reserved (Fixed at 1)						
		0	Reserved (Fixed at 1)						
0e043c	PBX outside line access code 1 (BCD)	7	1st digit	Utility Mode	0xff	0xff	0xff	XG	7C
		6							
		5							
		4							
		3	2nd digit						
		2							
		1							
		0							
0e043d	PBX outside line access code 2 (BCD)	7	3rd digit	Utility Mode	0xff	0xff	0xff	XG	7D
		6							
		5							
		4							
		3	4th digit						
		2							
		1							
		0							
0e043e	Limit of long size reception	7		-	0x00	0x00	0x00	XG	7E
		6							
		5							
		4							
		3							
		2							
		1							
		0	Limit of long size reception 0: Limit 1: Unlimited						
0e043f	Max. size of long original received (In the case of 400 dpi or less)	7	When the resolution for reception is 400 dpi or less, the size of a long original received that is regarded as an error (The maximum size is a decimal value x 10 mm. 0 is regarded as 1000 mm.)	-	0x64	0x64	0x64	XG	7F
		6							
		5							
		4							
		3							
		2							
		1							

Address	Items	Bit No	Contents	Setting	Default			CSRC	
					Japan	North America	Europe	Command	Parameter
		0							

11.27.9 0e044#

Address	Items	Bit No	Contents	Setting	Default			CSRC	
					Japan	North America	Europe	Command	Parameter
0e0440	Max. size of long original received (In the case of 600 dpi or less)	7	When the resolution for reception is 600 dpi, the size of a long original received that is regarded as an error (The maximum length is a decimal value x 10 mm. 0 is regarded as 1000 mm.)	-	0x64	0x64	0x64	XG	80
		6							
		5							
		4							
		3							
		2							
		1							
		0							
0e0441	Voice response output level adjustment	7		-	0x0e	0x0e	0x0e	XG	81
		6							
		5							
		4							
		3	Voice response volume (HEX) 0000: min - 1111: max						
		2							
		1							
		0							
0e0442	Monitor speaker (Received signal sound)	7		Utility Mode (0-4)	0x14	0x14	0x14	XG	82
		6							
		5							
		4	Speaker volume (HEX) (0-1F)						
		3							
		2							
		1							
		0							
0e0443 - 0e044d	Reserved area	7		-	ALL 0x00	ALL 0x00	ALL 0x00	XG	83 - 8D
		6							
		5							
		4							
		3							
		2							
		1							
		0							
0e044e	External phone off hook determination threshold value	7	External phone off hook determination threshold value current (unit: 1 mA, HEX)	-	0x00	0x00	0x00	XG	8E
		6							
		5							
		4							
		3							
		2							
		1							
		0							

11.27.10 0f006#

Address	Items	Bit No	Contents	Setting	Default			CSRC	
					Japan	North America	Europe	Command	Parameter
0f0060	Reception main scan resolution capacity [0]	7	400dpi	-	0xaa	0xaa	0xaa	XH	20
		6	300dpi						
		5	200dpi						
		4							
		3	16pels/mm						

Address	Items	Bit No	Contents	Setting	Default			CSRC	
					Japan	North America	Europe	Command	Parameter
		2							
		1	8pels/mm						
		0							
0f0061	Reception main scan resolution capacity [1]	7		-	0x01	0x01	0x01	XH	21
		6							
		5							
		4							
		3							
		2	(1200dpi)						
		1	(800dpi)						
		0	600dpi						
0f0062	Reception sub scan resolution capacity [0]	7	400dpi	-	0xbb	0xbb	0xbb	XH	22
		6	300dpi						
		5	200dpi						
		4	100dpi						
		3	15.4 l/mm						
		2							
		1	7.7 l/mm						
		0	3.85 l/mm						
0f0063	Reception sub scan resolution capacity [1]	7		-	0x01	0x01	0x01	XH	23
		6							
		5							
		4							
		3							
		2	(1200dpi)						
		1	(800dpi)						
		0	600dpi						
0f0064	Reception coding system capacity	7		-	0x1f	0x1f	0x1f	XH	24
		6							
		5	(JPEG)						
		4	JBIG						
		3	MMR						
		2	MR						
		1	MH						
		0	THRU						
0f0065	Reception original width capacity	7		-	0x0e	0x0e	0x0e	XH	25
		6							
		5	(Legal)						
		4	(Letter)						
		3	A3						
		2	B4						
		1	A4						
		0	(A5)						
0f0066	Reception original length capacity	7		-	0x46	0x46	0x46	XH	26
		6	Unlimited						
		5	(Legal)						
		4	(Letter)						
		3							
		2	B4						
		1	A4						
		0	(A5)						
0f0067	Reception speed capacity [0]	7		-	0x1b	0x1b	0x1b	XH	27
		6							
		5							
		4	V.29-96						
		3	V.29-72						

Address	Items	Bit No	Contents	Setting	Default			CSRC	
					Japan	North America	Europe	Command	Parameter
		2							
		1	V.27-48						
		0	V.27-24						
0f0068	Reception speed capacity [1]	7	V.17-144	-	0xfc	0xfc	0xfc	XH	28
		6	V.17-120						
		5	V.17-96						
		4	V.17-72						
		3	V.33-144						
		2	V.33-120						
		1	(TCM-96)						
		0	(TCM-72)						
0f0069	Reception speed capacity [2]	7	V.34-192	-	0xff	0xff	0xff	XH	29
		6	V.34-168						
		5	V.34-144						
		4	V.34-120						
		3	V.34-96						
		2	V.34-72						
		1	V.34-48						
		0	V.34-24						
0f006a	Reception speed capacity [3]	7		-	0x3f	0x3f	0x3f	XH	2A
		6							
		5	V.34-336						
		4	V.34-312						
		3	V.34-288						
		2	V.34-264						
		1	V.34-240						
		0	V.34-216						
0f006b	Reception MSLT capacity	7	T3.85 or 200 x 100 dpi (0-40) ms unit	-	0x05	0x05	0x05	XH	2B
		6							
		5							
		4							
		3							
		2							
		1							
		0							
0f006c	Reception MSLT capacity	7	T7.7 or 200 x 200 dpi (0-40) ms unit	-	0x05	0x05	0x05	XH	2C
		6							
		5							
		4							
		3							
		2							
		1							
		0							
0f006d	Reception MSLT capacity	7	T11.55 or 300 x 300 dpi (0-40) ms unit	-	0x05	0x05	0x05	XH	2D
		6							
		5							
		4							
		3							
		2							
		1							
		0							
0f006e	Reception MSLT capacity	7	T15.4 or 400 x 400 dpi or 600 x 600 dpi (0-40) ms unit	-	0x05	0x05	0x05	XH	2E
		6							
		5							
		4							
		3							

Address	Items	Bit No	Contents	Setting	Default			CSRC	
					Japan	North America	Europe	Command	Parameter
		2							
		1							
		0							
0f006f	Reception ECM capacity	7		-	0x01	0x01	0x01	XH	2F
		6							
		5							
		4							
		3							
		2							
		1							
		0	ECM reception capacity 0: OFF, 1: ON						

11.27.11 0f007#

Address	Items	Bit No	Contents	Setting	Default			CSRC	
					Japan	North America	Europe	Command	Parameter
0f0070	Reception protocol capacity	7		-	0x11	0x11	0x11	XH	30
		6							
		5							
		4	V8/V34						
		3							
		2							
		1							
		0	G3S						
0f0071	Reception option frame capacity	7		-	0x07	0x07	0x07	XH	31
		6							
		5							
		4	(BFT)						
		3	(BTM)						
		2	PWD						
		1	(SEP)						
		0	SUB						
0f0072 - 0f007f	Reserved area	7		-	ALL 0x00	ALL 0x00	ALL 0x00	XH	32 - 3F
		6							
		5							
		4							
		3							
		2							
		1							
		0							

11.27.12 10006#

Address	Items	Bit No	Contents	Setting	Default			CSRC	
					Japan	North America	Europe	Command	Parameter
100060	Transmission main scan line resolution instruction [0]	7	400dpi	-	0x22	0x22	0x22	XH	60
		6	300dpi						
		5	200dpi						
		4							
		3	16pels/mm						
		2							
		1	8pels/mm						
		0							
100061	Transmission main scan line	7		-	0x01	0x01	0x01	XH	61
		6							

Address	Items	Bit No	Contents	Setting	Default			CSRC	
					Japan	North America	Europe	Command	Parameter
	resolution instruction [1]	5							
		4							
		3							
		2	1200dpi						
		1	800dpi						
		0	600dpi						
100062	Transmission sub scanning resolution instruction [0]	7	400dpi	-	0x11	0x11	0x11	XH	62
		6	300dpi						
		5	200dpi						
		4	100dpi						
		3	15.4 l/mm						
		2							
		1	7.7 l/mm						
		0	3.85 l/mm						
100063	Transmission sub scanning resolution instruction [1]	7		-	0x01	0x01	0x01	XH	63
		6							
		5							
		4							
		3							
		2	1200dpi						
		1	800dpi						
		0	600dpi						
100064	Transmission coding method instruction	7		-	0x1f	0x1f	0x1f	XH	64
		6							
		5	(JPEG)						
		4	JBIG						
		3	MMR						
		2	MR						
		1	MH						
		0	THRU						
100065	Transmission document width instruction	7		-	0x0e	0x0e	0x0e	XH	65
		6							
		5	(Legal)						
		4	(Letter)						
		3	A3						
		2	B4						
		1	A4						
		0	(A5)						
100066	Transmission document length instruction	7		-	0x46	0x46	0x46	XH	66
		6	Unlimited						
		5	(Legal)						
		4	(Letter)						
		3							
		2	B4						
		1	A4						
		0	(A5)						
100067	Transmission speed instruction [0]	7		-	0x1b	0x1b	0x1b	XH	67
		6							
		5							
		4	V.29-96						
		3	V.29-72						
		2							
		1	V.27-48						
		0	V.27-24						
100068	Transmission speed instruction [1]	7	V.17-144	-	0xf0	0xf0	0xf0	XH	68
		6	V.17-120						

Address	Items	Bit No	Contents	Setting	Default			CSRC	
					Japan	North America	Europe	Command	Parameter
		5	V.17-96						
		4	V.17-72						
		3	V.33-144						
		2	V.33-120						
		1	(TCM-96)						
		0	(TCM-72)						
100069	Transmission speed instruction [2]	7	V.34-192	-	0xff	0xff	0xff	XH	69
		6	V.34-168						
		5	V.34-144						
		4	V.34-120						
		3	V.34-96						
		2	V.34-72						
		1	V.34-48						
		0	V.34-24						
10006a	Transmission speed instruction [3]	7		-	0x3f	0x3f	0x3f	XH	6A
		6							
		5	V.34-336						
		4	V.34-312						
		3	V.34-288						
		2	V.34-264						
		1	V.34-240						
		0	V.34-216						
10006b	Transmission MSLT instruction	7	T3.85 or 200 x 100dpi (0-40) ms unit	-	0x05	0x05	0x05	XH	6B
		6							
		5							
		4							
		3							
		2							
		1							
		0							
10006c	Transmission MSLT instruction	7	T7.7 or 200 x 200dpi (0-40) ms unit	-	0x05	0x05	0x05	XH	6C
		6							
		5							
		4							
		3							
		2							
		1							
		0							
10006d	Transmission MSLT instruction	7	T11.55 or 300 x 300dpi (0-40) ms unit	-	0x05	0x05	0x05	XH	6D
		6							
		5							
		4							
		3							
		2							
		1							
		0							
10006e	Transmission MSLT instruction	7	T15.4 or 400 x 400dpi or 600 x 600dpi (0-40) ms unit	-	0x05	0x05	0x05	XH	6E
		6							
		5							
		4							
		3							
		2							
		1							
		0							
10006f	Transmission ECM instruction	7		-	0x01	0x01	0x01	XH	6F
		6							

Address	Items	Bit No	Contents	Setting	Default			CSRC	
					Japan	North America	Europe	Command	Parameter
		5							
		4							
		3							
		2							
		1	ECM transmission frame size 0: 256 1: 64						
		0	ECM transmission instruction 0: OFF 1: ON						

11.27.13 10007#

Address	Items	Bit No	Contents	Setting	Default			CSRC	
					Japan	North America	Europe	Command	Parameter
100070	Transmission protocol instruction	7		-	0x11	0x11	0x11	XH	70
		6							
		5							
		4	V8/V34						
		3							
		2							
		1							
		0	G3S						
100071	Transmission option frame instruction	7		-	0x00	0x00	0x00	XH	71
		6							
		5							
		4	(BFT)						
		3	(BTM)						
		2	PWD						
		1	(SEP)						
		0	SUB						
100072 - 10007f	Reserved area	7		-	ALL 0x00	ALL 0x00	ALL 0x00	XH	72 - 7F
		6							
		5							
		4							
		3							
		2							
		1							
		0							

11.28 Finisher

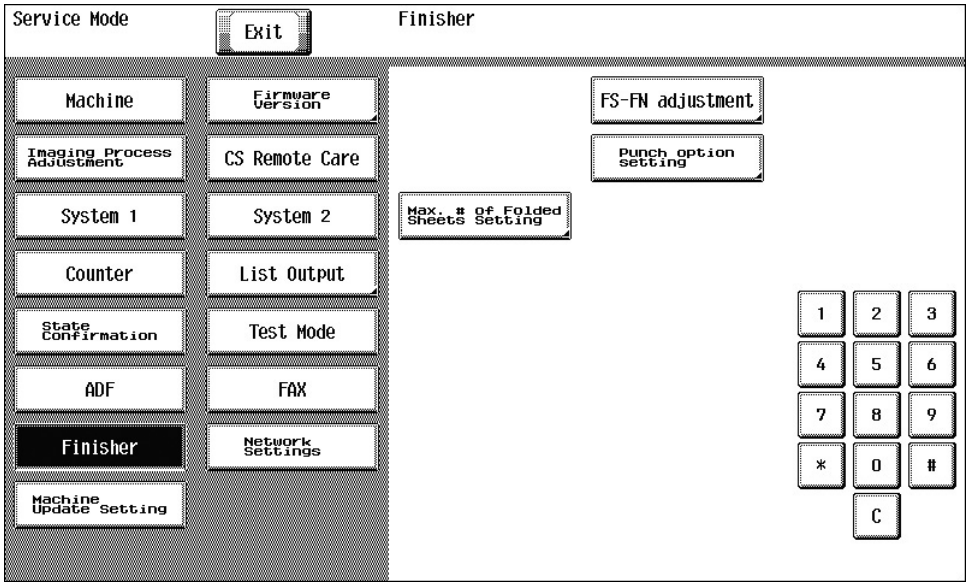

11.28.1 FS-FN adjustment - Center Staple Position (SD-511)

(1) Use

- Adjust the stapling position for each paper size when printing with the center staple function.

(2) Setting range

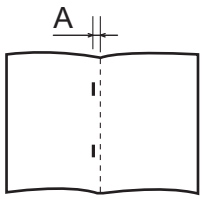

- Width A should fall within the following target.

Target	0 ± 1.0 mm
Setting range	-10.0 mm to +10.0 mm (1 step: 0.1 mm)

(3) Procedure

NOTE

- **After [Half-Fold Position] adjustment, make this [Center Staple Position] adjustment.**

1. Place five sheets of originals on the DF.
2. Make a set of copy in the saddle stitching mode.
3. Check the amount of horizontal deviation (width A) between the staple and the half fold positions on the set of copy.
4. If width A is out of the target, make the following adjustment.
5. Call the Service Mode to the screen.
6. Touch [Finisher] -> [FS-FN adjustment] -> [Center Staple Position].
7. Touch the paper size where staple position is adjusted.
8. Look at the copy and adjust the staple position with the [+] / [-] key.

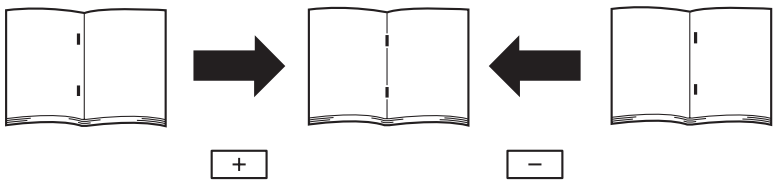

NOTE

- **The adjustment setting value used for each paper size is the value set with [ALL] plus the value set for each paper size.**

9. Touch [Test Copy].
10. Select the tray loading paper for the test copy.
11. Touch [3].
12. Touch [Fold & Staple], and press the start key.
13. Check the staple positions deviate.
14. Touch [END] to return to the adjustment screen.
15. Touch [OK] twice.

16. Touch [Exit] on the Service Mode screen.

11.28.2 FS-FN adjustment - Half-Fold Position (SD-511)

(1) Use

- Use this adjustment to adjust the half-fold position in half-fold printing.

(2) Setting range

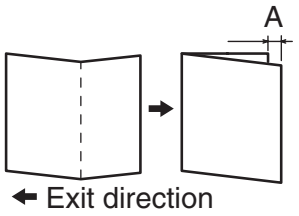

- Width A should fall within the following target.

Target	A = Less than 1.0 mm
Setting range	-10.0 mm to +10.0 mm (1 step: 0.1 mm)

(3) Procedure

1. Place two sheets of originals on the DF.
2. Make a copy in the folding mode.
3. Fold the copies along the crease.
4. Measure the amount of width A.
5. If width A is out of the target, make the following target.
6. Call the Service Mode to the screen.
7. Touch [Finisher] -> [FS-FN adjustment] -> [Half-Fold Position].
8. Touch the paper size where half-fold position is adjusted.
9. Look at the copy and adjust the half-fold position with the [+]/[-] key.

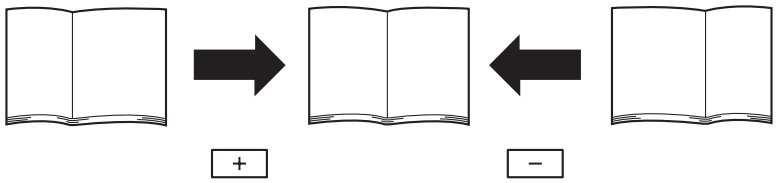

NOTE

- **The adjustment setting value used for each paper size is the value set with [ALL] plus the value set for each paper size.**

10. Touch [Test Copy].
11. Select the tray loading paper for the test copy.
12. Touch [3].
13. Touch [Half-Fold], and press the start key.
14. Check the crease positions deviate.
15. Touch [END] to return to the adjustment screen.
16. Touch [OK] twice.
17. Touch [Exit] on the Service Mode screen.

11.28.3 FS-FN adjustment - 1st Tri-Fold Adjustment/2nd Tri-Fold Adjustment (SD-511)

(1) Use

- To adjust the positions of the 1st Tri-fold and 2nd Tri-fold for the Tri-fold printing.

(2) Setting range

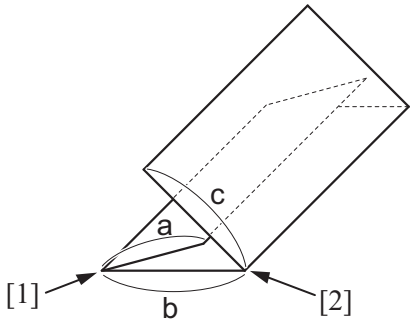

[1]	Position of the first tri-fold	[2]	Position of the second tri-fold

- Check whether the tri-fold widths "a" and "b" of the ejected paper are within the target.

Target	A4S	• Length a: 95 mm ± 2 mm • Length b: 102 mm ± 2 mm
	8.5 x 11S	• Length a: 89.4 mm ± 2 mm • Length b: 96.0 mm ± 2 mm
	16KS	• Length a: 88.0 mm ± 2 mm • Length b: 92.0 mm ±2 mm
Setting range	-10.0 mm to +10.0 mm (Step = 0.1 mm)	

(3) Procedure

- Make copies in the tri-fold mode.
- Check whether the tri-fold widths "a" and "b" of ejected copy samples are within the target. Complete the adjustment, if the measured values fall within the target.

(a) If the width "a" is out of the target:

1. Call the Service Mode to the screen.
2. Touch [Finisher] -> [FS-FN adjustment] -> [1st Tri-Fold Adjustment].
3. Select a paper size where the tri-fold position needs adjustment.
4. While checking the copy samples, touch [+] or [-] to adjust the tri-fold position.
   - To increase the width a, enter a positive value with [+].
   - To decrease the width a, enter a negative value with [-].
5. Touch [Test Copy].
6. Select the tray loading paper for the test copy.
7. Touch [3].
8. Touch [Tri-Fold], and press the start key.
9. Check displacement of the fold position on the fed out copies.
10. Touch [END] to return to the adjustment screen.
11. Touch [OK] twice.
12. Touch [Exit] on the Service Mode screen.

(b) If width "b" is out of the target:

1. Call the Service Mode to the screen.
2. Touch [Finisher] -> [FS-FN adjustment] -> [2nd Tri-Fold Adjustment].
3. Select a paper size where the tri-fold position needs adjustment.
4. While checking the copy samples, touch [+] or [-] to adjust the tri-fold position.
   - To increase the width b, enter a positive value with [+].
   - To decrease the width b, enter a negative value with [-].
5. Touch [Test Copy].
6. Select the tray loading paper for the test copy.
7. Touch [3].
8. Touch [Tri-Fold], and press the start key.
9. Check displacement of the fold position on the fed out copies.
10. Touch [END] to return to the adjustment screen.
11. Touch [OK] twice.
12. Touch [Exit] on the Service Mode screen.

11.28.4 FS-FN adjustment - Punch Edge Adj (PK-520)

(1) Use

- To change the horizontal position of the punch holes.

(2) Setting range

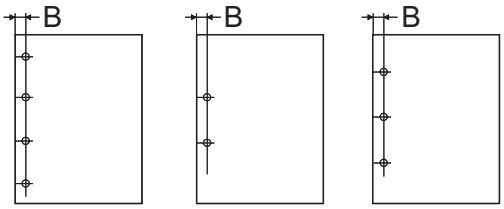

- Width B should fall within the following target.

Target	• B = 9.5 mm ± 1.0 mm (2-3 hole) • B = 11.0 mm ± 1.0 mm (2-4 hole) • B = 10.5 mm ± 1.0 mm (SWE4 hole)
Setting range	-5.0 mm to +5.0 mm (1 step: 0.1 mm)

(3) Procedure

1. Make a copy sample in the punch mode.
2. Check to see if the width from the paper end to the center of the punch hole in the copy sample falls within the target. Complete the adjustment, if the measured value falls within the target.
3. Call the Service Mode to the screen.
4. Touch [Finisher] -> [FS-FN adjustment] -> [Punch Edge Adj].

5. Touch the paper type where punch horizontal position is adjusted.
6. Look at the copy and adjust the punch horizontal position with the [+] / [-] key.
   - To make width B greater: Enter the value of [+]
   - To make width a smaller: Enter the value of [-]

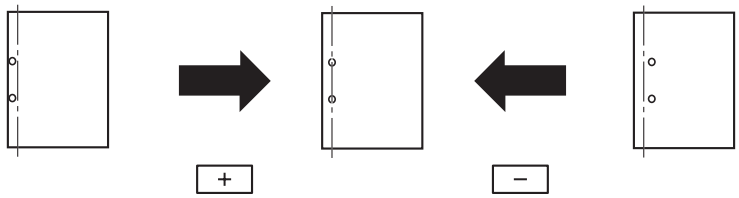

7. Touch [Test Copy].
8. Select the tray loading paper for the test copy.
9. Touch [3].
10. Select the number of punch holes in the “Punch” list, and then press the start key.
11. Check the punch hole positions.
12. Touch [END] to return to the adjustment screen.
13. Touch [OK] twice.
14. Touch [Exit] on the Service Mode screen.

11.28.5 FS-FN adjustment - Punch Regist Loop Size (PK-519/PK-520)

(1) Use

- To adjust the amount of the punch registration loop applied to paper conveyed from MFP.
- Used when tilted punched hole position, wrinkled paper, or jam at punch registration section occurs.

(2) Setting range

- -4.0 mm to +4.0 mm

(3) Procedure

1. Call the Service Mode to the screen.
2. Touch [Finisher] -> [FS-FN adjustment] -> [Punch Regist Loop Size].
3. Select a paper type where the punch hole position needs adjustment.
4. Enter the target using [+] or [-].
   - If the punch hole position is tilted, enter a positive (+) value.
   - If wrinkled paper or other problems occur, enter a negative (-) value.
5. Touch [OK] twice.
6. Touch [Exit] on the Service Mode screen.

11.28.6 FS-FN adjustment - Finisher Components Test Mode

(1) Use

- Use this adjustment to check finisher’s operation.

(2) Procedure

1. Call the Service Mode to the screen.
2. Touch [Finisher] -> [FS-FN adjustment] -> [Finisher Components Test Mode].
3. Select a mode.
4. Press the Start key to start finisher operation.
5. Press the Stop key to stop ongoing finisher operation.

(3) Finisher components list (FS-534/SD-511)

Mode	
Finisher Components Test Mode 1	Paper Transport Motor
	Paper Entrance Motor
	Paper Exit Motor
	Paper Alignment Plate Motor/F
	Main Tray Up/Down Motor
	Paper Alignment Plate Motor/R
	Side Stopper Guide Motor
	Paper Exit Belt Motor
	Exit Roller Retraction Motor
	Tail Edge Holding Plate Motor
	Side Stapler Movement Motor
	FD Center Stopper Guide Motor
	Punch Drive Motor
	Paddle Motor

Mode	
Finisher Components Test Mode 2	Switch Output Tray Motor
	SD Paper Transport Motor
	Folding Roller Motor
	Leading Edge Gripper Solenoid
	Leading Edge Stopper Motor
	CD Alignment Plate Motor
	Folding Knife Motor
	Chip Box Change Motor
	Paper Discharge Control Motor
	SD Paddle Motor
	Tri-folding Knife Motor

(4) Finisher components list (FS-533)

Mode
Stapler Movement
Alignment Plate F/R Movement
Tray up/down Operation
Exit Roller Retraction
Conveyance Drive
Paper Surface Detect Solenoid
Paddle 1 Rotation Solenoid Drive
Punch Drive Motor
Batch Solenoid Driver

11.28.7 FS-FN adjustment - Alignment plate Position (FS-533)

(1) Use

- When FS-533 is installed, use this feature to fine adjust the aligning plate that aligns ejected paper.

(2) Default setting

- 0.0mm

(3) Setting range

- -10.0 mm to +10.0 mm (1 step: 0.1 mm)

(4) Procedure

1. Call the Service Mode to the screen.
2. Touch [Finisher] -> [FS-FN adjustment] -> [Alignment Plate Position].
3. Select the [Alignment Plate Position (Back)] or [Alignment Plate Position (Side)].
4. Set and adjust a value with the [+] / [-] key.
5. Touch [OK] twice.
6. Touch [Exit] on the Service Mode screen.
7. Turn OFF the main power switch, wait for 10 sec., then turn the switch ON.

11.28.8 FS-FN adjustment - Paper Alignment Guides W. Adj. (FS-534)

(1) Use

- To fine adjust the horizontal width of the aligning plate.
- Use this feature to fine adjust the aligning plate that aligns ejected paper.

(2) Default setting

- 0.0 mm

(3) Setting range

- -10.0 mm to +10.0 mm (1 step: 0.1 mm)

(4) Procedure

1. Call the Service Mode to the screen.
2. Touch [Finisher] -> [FS-FN adjustment] -> [Paper Alignment Guides W. Adj.].
3. Select a mode from the following.
4. Set and adjust a value with the [+] / [-] key.
5. Touch [OK] twice.
6. Touch [Exit] on the Service Mode screen.

11.28.9 Punch Option Setting

(1) Use

- Specifies punch settings depending on the optional punch kit attached to the finisher.
- An individual punch setting needs to be made according to the type of the punch option.

(2) Procedure

1. Call the Service Mode to the screen.
2. Touch [Finisher] -> [Punch Option Setting].
3. Touch [PK-520].
4. Touch [2-Holes/3-Holes], [2-Holes/4-Holes], [EU4 holes] or [SWE4 holes].
5. Touch [decision].
6. Touch [END].
7. Touch [Exit] on the Service Mode screen.

11.28.10 Max. # of Folded Sheets Setting (SD-511)

(1) Use

- Imposes restriction on the number of sheets to be folded in each of different folding modes.
- This function is available only when SD-511 is installed.
- To change the maximum number of sheets to be folded in each of different folding modes.

(2) Procedure

1. Call the Service Mode to the screen.
2. Touch [Finisher] -> [Max. # of Folded Sheets Setting].
3. Select a folding mode where the maximum is restricted and enter a desirable maximum number with the 10-key pad.
4. Touch [END].
5. Touch [Exit] on the Service Mode screen.

(3) Default setting

- Center Fold: 5 Piece
- Center Staple: 20 Piece
- Tri-Fold: 3 Piece

(4) Setting range

Center Fold
- 1 to “5 Piece”

Center Staple
- 2 to “20 Piece”

Tri-Fold
- 1 to “3 Piece”

11.28.11 Job Separator (JS-506)

(1) Use

- Checks the job separator’s operation.

(2) Procedure

1. Call the Service Mode to the screen.
2. Touch [Finisher] -> [Job Separator].
3. Select the mode where you wish to check the operation.
4. Press the Start key to start job separator operation.
5. Press the Stop key to stop ongoing job separator operation.

11.29 Network Settings

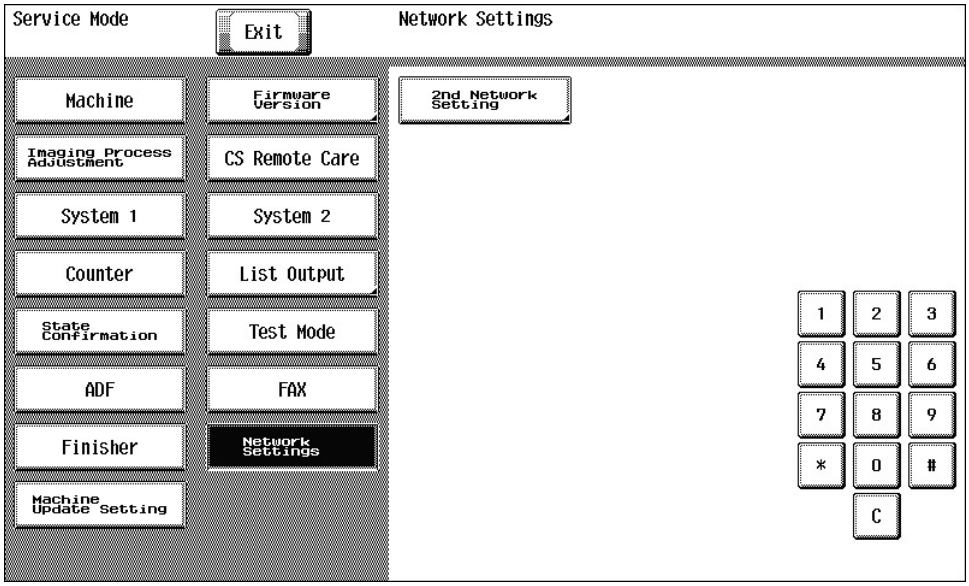

- It is displayed when this machine is equipped with an optional Upgrade Kit UK-208.
- An optional Upgrade Kit UK-209 is required to connect this machine to an Android tablet terminal. However, when the dual scan document feeder DF-701 is installed, no installation of the upgrade kit UK-209 is required.

11.29.1 2nd Network Setting - 2nd network card settings

(1) Use

- To be configured when an optional Upgrade Kit UK-208 has been installed in this machine.

(2) Default setting

- Set

(3) Setting item

- Set
- “Unset”
- When [Set] is selected, configure the following settings.

11.29.2 2nd Network Setting - Operating Mode

NOTE

- **This setting is to be configured when UK-208 is used as a wireless LAN access point.**

(1) Use

- To set the operating mode.

(2) Default setting

- No

(3) Setting item

- “No”
- Access point Mode
- After the above selection, touch [Fix] to turn OFF and ON the main power switch.

11.29.3 2nd Network Setting - SSID

(1) Use

- To enter the SSID of the wireless LAN access point connected to the machine (using up to 32 characters).

11.29.4 2nd Network Setting - Authentication/Encryption Algorithm

(1) Use

- To set the algorithm used for authentication or encryption.

(2) Default setting

- No Authentication/Encryption

(3) Setting item

- “No Authentication/Encryption”
- WEP
- WPA-PSK (TKIP)

- WPA-PSK (AES)
- WPA2-PSK (TKIP)
- WPA2-PSK (AES)
- WPA/WPA2-PSK

11.29.5 2nd Network Setting - WEP Key

(1) Use

- To be set when WEP is selected for authentication/encryption Algorithm.

(2) Procedure

1. Select an input method.
2. Touch Edit, then enter a new WEP key.
3. Touch OK.
4. Enter the WEP key again to make a check.
5. Touch OK.

11.29.6 2nd Network Setting - Passphrase

(1) Use

- To be set when a method including WPA is selected for authentication/encryption Algorithm.

(2) Procedure

<Input method>
- Select an Input method.

<Security key>
- Enter a value of the security key of passphrase.

<Passphrase Auto Update>
- Set ON/OFF for passphrase auto update. [Yes] is specified by default.

<Update Interval>
- Set the interval for updating passphrase. [60] minutes is specified by default.

<40 to 20 MHz Auto Switch>
- Set [ON] to try a high-speed communication with 40MHz. [OFF] is specified by default.

11.29.7 2nd Network Setting - Wireless Channel

(1) Use

- To set a wireless channel.

(2) Default setting

- Auto

(3) Setting item

- 1 to 13
- “Auto”

11.29.8 2nd Network Setting - ANY Connection

(1) Use

- To set whether or not to allow the ANY connection.

(2) Default setting

- Permit

(3) Setting item

- “Permit”
- Prohibit

11.29.9 2nd Network Setting - Connect permission extension address list

(1) Use

- To allow the connection through the only device with specified MAC address.

(2) Procedure

1. Touch [Edit], then enter the MAC address.

11.29.10 2nd Network Setting - DHCP Server Setting

(1) Use

- To set whether or not to enable the DHCP server.

(2) Default setting

- ON

(3) Setting item

- "ON"
- OFF
- If set to ON, set the IP leasing address, subnet mask and leasing period.

11.29.11 2nd Network Setting - TCP/IP Settings

(1) Use

- To set TCP/IP.

(2) Procedure

1. If IPv4 Settings is selected, select [Auto Input] or [Enter New Address].
   - If [Auto Input] is selected, configure DHCP settings.
   - If [Enter New Address] is selected, set [IP Address] and [Subnet Mask].
2. If IPv6 Settings is selected, the link-local address will be displayed as IPv6 type.

11.30 Machine Update Setting

Internet ISW

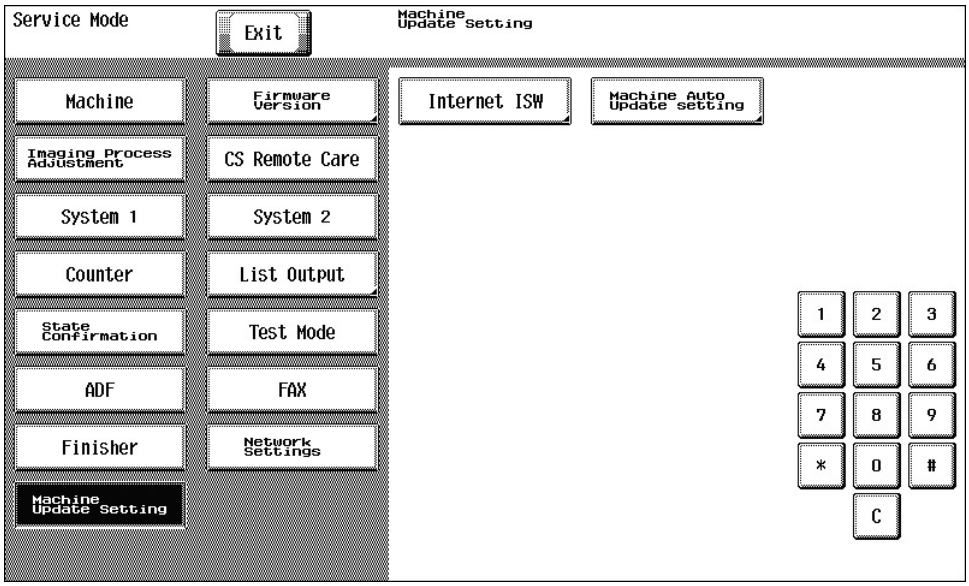

- By using this setting, the firmware or update file stored in the server can be downloaded over internet for upgrading.
- For details for upgrading the firmware, refer to “REWRITING OF FIRMWARE.”

11.30.1 Internet ISW - Internet ISW Set

(1) Use

- To set whether or not to enable each setting for Internet ISW.
- To use when upgrading the firmware by Internet ISW.
- Each setting such as Server setting will be valid by setting this to “ON”.

  NOTE
  - **When the following setting is set to “ON”, this setting will automatically be set to “OFF” and cannot be changed.**
    [Administrator Settings] -> [Security Settings] -> [Enhanced Security Mode]

(2) Default setting

- OFF

(3) Setting item

- ON
- “OFF”
- When this setting is set to "ON," [Open Mode Settings] can be configured. When [Open Mode Settings] is set to "Set," firmware download and update via Internet ISW are available in Administrator Settings.

11.30.2 Internet ISW - HTTP Setting

- It will be displayed only when [Internet ISW Set] is set to “ON”.

(1) HTTP data acquisition setting

(a) Use

- To set whether or not to enable downloading using the HTTP protocol.

- To use when accessing the server using the HTTP protocol.

(b) Default setting

- OFF

(c) Setting item

- ON
- "OFF"

(2) Connection Time-Out

(a) Use

- To set the time for the timeout for accessing the server.

(b) Default setting

- 60 sec

(c) Setting range

- 30 to 300 sec.

11.30.3 Internet ISW - FTP Setting

- It will be displayed only when [Internet ISW Set] is set to "ON".

(1) FTP data acquisition setting

(a) Use

- To set whether or not to enable downloading using FTP protocol.
- To use when accessing the server with FTP protocol.

(b) Default setting

- ON

(c) Setting item

- "ON"
- OFF

(2) Connection Setting

(a) Use

- To set the port No. and the time for timeout when accessing the FTP server, and also to set whether or not to enable PASV mode.
- To use when connecting by the PASV (passive) mode (FTP server side will inform the connection port before connecting).

(b) Procedure

Port Number

- Enter the value between 1 and 65535 using the 10-key pad.

Connection Time Out

- Enter the value between 1 and 60 (min.) using the 10-key pad.

(c) Default setting (PASV Mode)

- OFF

(d) Setting item (PASV Mode)

- ON
- "OFF"

11.30.4 Internet ISW - Forwarding Access Setting

(1) User ID

(a) Use

- To register the user ID for accessing the program server where firmware is to be stored.

(b) Procedure

1. Select [User ID].
2. Enter the user ID (up to 64 one-byte characters) on the on-screen keyboard.

(2) Password

(a) Use

- To register the password for accessing the program server where firmware is to be stored.

(b) Procedure

1. Select [Password].
2. Enter the password (up to 64 characters) on the on-screen keyboard.

(3) URL

(a) Use

- To register the address and directory of the program server where the firmware is to be stored in URL.

(b) Procedure

1. Select [URL].
2. Enter the URL (up to 256 one-byte characters) on the on-screen keyboard.
   NOTE
   - **Enter the URL which format suits the protocol to be used.**
     When connecting to http "http:// (Host name or IP address)/ directory name" or "https:// (Host name or IP address)/ directory name".
     When connecting to ftp "ftp:// (Host name or IP address) / directory name".

(4) FileName

(a) Use

- To register the file name of the firmware data to be downloaded.

(b) Procedure

1. Select [FileName].
2. Enter the file name (up to 63 one-byte characters) on the on-screen keyboard.

11.30.5 Internet ISW - Download

NOTE

- **To connect MFP to the Internet via a proxy, the proxy server related settings must be configured in addition to [Forwarding Access Setting].**
  The setting of the proxy used in the Internet ISW communication is configured in [Administrator Settings] -> [Network Settings] -> [Machine Update Settings] -> [Internet ISW Settings] -> [FTP Server Settings] or [Administrator Settings] -> [Network Settings] -> [Machine Update Settings] -> [HTTP Proxy Settings].

(1) Download/Update

(a) Use

- Access the program server according to the Internet ISW setting, and download the firmware.
- To use when updating the firmware via network.
- The firmware is downloaded and updated successively. During the firmware download and update, MFP cannot be used.

(b) Procedure

1. Select [Download/Update].
2. Touch [Start] to start downloading the firmware.
3. The message to show the status will be displayed on the screen while connecting and transferring data.
   NOTE
   - **When it failed to connect to the program server, or failed to download, the error code and the message will be displayed. Check the cause of the error by the error code, and follow the message for resetting.**
     Refer to "K.5.1 Error code list for the Internet ISW" for the error codes.
4. When the firmware is normally upgraded, the main body will automatically be restarted to complete the Internet ISW.

(2) Download

(a) Use

- To access the program server and download the firmware in accordance with the settings configured in Internet ISW Settings.
- As the firmware is downloaded in the background, MFP can be used during download.
- If firmware data already downloaded exits in the HDD, the data is overwritten and replaced by the new data.

(b) Procedure

1. Select [Download].
2. Touch [Start] to start downloading the firmware.
3. The status message appears on the screen during connection and data transfer.
   In the middle of downloading, the task can be cancelled by touching [Cancel].
   NOTE
   - **If connection to the program server or data download fails, an error code and a message are displayed. Identify the cause of the problem with the error code and reconfigure the settings following the message.**
   - **For details on error codes, refer to "K.5.1 Error code list for the Internet ISW."**
4. When the firmware download is successfully completed, the result "OK" appears.

(3) Update

(a) Use

1. To update the firmware by using the firmware downloaded and saved in the HDD
2. During the firmware download and update, MFP cannot be used.
3. This button is not appeared if there is no firmware in the HDD.

(b) Procedure

1. Touch [Update].
2. Check the firmware file version in HDD.
3. Press Start key to update the firmware.
4. When the firmware is normally upgraded, the main body will automatically be restarted to complete the Internet ISW.

(4) Delete

(a) Use

- To delete the firmware file saved in the HDD.
- This button is not appeared if there is no firmware in the HDD.

(b) Procedure

- Touch [Delete].
- Press Start key to delete the firmware.

11.30.6 Internet ISW - Update Start Time Settings

(1) Use

- To set the start time in order to automatically update the downloaded firmware.

(2) Procedure

1. Select [Set] for [Update Firmware at Specified Time].
2. Touch [Hour] and [Min.] and set the firmware update start time.

NOTE

- **If updated firmware has not been downloaded by the specified time, firmware update is not performed.**
- **If the main power switch is turned OFF during a firmware update, the firmware is updated next time when the main power switch is turned ON.**
- **If a job is in process when the specified time comes, the firmware is updated after the completion of the job.**

11.30.7 Machine Auto Update setting - Auto Update setting

- Obtain the update file for the machine from the file storage server, and update the firmware or settings of the machine.
- This function is same as that of the Administrator settings > Network Setting, but it will not be used together with the function of the service mode.
- Refer to J-4 for how to create an update file.

(1) Auto Update

(a) Use

- To obtain the update file from the specified location, and configure settings to update the machine at the specified time.

(b) Default settings

- OFF

(c) Setting item

- ON
- "OFF"

(d) Procedure

- If [ON] is selected, configure the following settings.

When SMB is set for the download protocol *1

<Host Name>

- Set the host name of the SMB server.

<File Path>

- Set the file path used in the SMB server communication. *2

<User Name>

- Set the user name used to access the SMB server.

<Password>

- Set the password used to access the SMB server.

<Number of retries>

- Set the number of times to retry when failed to obtain.

<Update Time>

- Touch Clear to set the time to update the machine.

<Polling Interval>

- Set the polling period for obtaining the update list.

<Repeat Interval>

- Set the period for retrying when failed to obtain.

*1: If the MFP relay server is used as a server on the data providing side, the SMB protocol will not be used.
*2: Specify the folder in which C_UpdateList.ini is stored. Refer to J-4 for details.
When HTTP is set for the download protocol
<URL>
- Set the address of the http server. *1

<User Name>
- Set the user name used to access the http server.

<Password>
- Set the password used to access the http server.

<Proxy>
- Select whether or not to use the proxy server. *2

<Connection Time-out>
- Set the time-out period for connecting to the server.

<Update Time>
- Touch Clear to set the time to update the machine.

<Polling Interval>
- Set the polling period for obtaining the update list.

<Repeat Interval>
- Set the period for retrying when failed to obtain.

*1: Specify the folder in which C_UpdateList.ini is stored. Refer to J-4 for details.
*2: If [ON] is selected, set the proxy with [Administrator Settings] -> [Network Settings] -> [Machine Update Settings] -> [HTTP Proxy Settings].

11.30.8 Machine Auto Update setting - Relay server setting

(1) Update File Download

- Configure settings to use the relay server to obtain the update relay data.
- This function is same as that of the Administrator settings > Network Setting, but it will not be used together with the function of the service mode.
- Refer to J-5 for how to create an update file.

(a) Default setting

- OFF

(b) Setting item

- ON
- "OFF"

(c) Procedure

- If [ON] is selected, configure the following settings.

<Obtain Setting File-URL>
- Set the address of the file storage server for relay data. *1

<Obtain Setting File-User Name>
- Set the user name used to access the file storage server.

<Obtain Setting File-Password>
- Set the password used to access the file storage server.

<Obtain Setting File-Proxy>
- Set whether or not to use the proxy server. *2

<Obtain Setting File-Connection Time-out>
- Set the time out period to connecting to the server.

<Polling Interval>
- Set the polling period for obtaining the update list.

<Repeat Interval>
- Set the period for retrying when failed to obtain.

*1: Specify the folder in which S_UpdateList.csv is stored. Refer to J-5 for details.
*2: If [ON] is selected, set the proxy with [Administrator Settings] -> [Network Settings] -> [Machine Update Settings] -> [HTTP Proxy Settings].
The distribution server (SMB authentication) will not be used.
In case of the distribution server (HTTP)
<User Name>
- Set the user name used to access the relay server by http protocol.

<Password>
- Set the password used to access the http server.

NOTE
- **Be sure not to forget the password used to access the http server. It is required for reset.**

11.30.9 Machine Auto Update setting - Transmission log Update

- The log file saves up to 100 records.
- Save the log related to machine auto update, and send it to the specified location.
- Configure settings for the transmission protocol.

(1) Default setting

- OFF

(2) Setting item

- ON
- "OFF"

(3) Procedure

- If [ON] is selected, configure the following settings.

When SMB is set for the transmission protocol
<Host Name>
- Set the host name for the SMB server.

<File Path>
- Set the file path used for SMB server communication.

<User Name>
- Set the user name used to access the SMB server.

<Password>
- Set the password used to access the SMB server.

When WebDAV is set for the transmission protocol
<URL>
- Set the address of the WebDAV server.

<User Name>
- Set the user name used to access the WebDAV server.

<Password>
- Set the password used to access the WebDAV server.

<Proxy>
- Set whether or not to use the proxy server. *1

*1: If [ON] is selected, set the proxy with [Administrator Settings] -> [Network Settings] -> [Machine Update Settings] -> [HTTP Proxy Settings].

11.30.10 Machine Auto Update setting - Transmission Server Log

- The log file saves up to 100 records.
- Save the log related to the update relay data download at relay server, and send it to the specified location.
- Configure settings for the transmission protocol.

(1) Default setting

- OFF

(2) Setting item

- ON
- "OFF"

(3) Procedure

- If [ON] is selected, configure the following settings.

When SMB is set for the transmission protocol
<Host Name>
- Set the host name of the SMB server.

<File Path>
- Set the file path used for the SMB server communication.

<User Name>
- Set the user name used to access the SMB server.

<Password>
- Set the password used to access the SMB server.

When WebDAV is set for the transmission protocol
<URL>
- Set the address of the WebDAV server.

<User Name>
- Set the user name used to access the WebDAV server.

<Password>
- Set the password used to access the WebDAV server.

<Proxy>
- Set whether or not to use the proxy server. *1

*1: If [ON] is selected, set the proxy with [Administrator Settings] -> [Network Settings] -> [Machine Update Settings] -> [HTTP Proxy Settings].

11.30.11 Machine Auto Update setting - Update Log Display

(1) Use

- To check the log related to the file download of the machine auto update.
- The latest five logs can be checked.

11.30.12 Machine Auto Update setting - Relay Server Log Confirmation

(1) Use

- To check the log related to the file download of the relay server.
- The latest five logs can be checked.

11.30.13 Machine Auto Update setting - Manual Update

- This is displayed when [Auto Update] is set to [ON] in [Service Mode] -> [Machine Update Setting] -> [Machine Auto Update setting] -> [Auto Update setting], and the update file has been downloaded in HDD.

(1) Use

- To execute update manually by using the downloaded file.

(2) Procedure

1. Touch [Manual Update] -> [Start] to start update.

NOTE

Do not set the power to OFF under the following state.

- **It takes about 45 seconds from touching [Manual Update] -> [Start] to the next operation of the MFP (Auto Power OFF).**
- **About one minute after the download completed screen being displayed, the MFP will restart.**
- **When rewriting configuration files followed by the firmware, the MFP will restart again.**

11.30.14 Machine Auto Update setting - Machine Export setting

(1) Use

- To output the machine settings as a XML file to an external memory (USB memory).

<Target items to be exported are as follows>

- Address Book
- Authentication Data
- Network Settings
- Remote Access Setting (CS Remote Care)
- Utility Settings
- Administrator Settings
- Service Settings (Excluding the setting of Software switch and Engine FW DipSW)

(2) Procedure

1. Select [Service Mode] -> [Machine Update Setting] -> [Machine Auto Update Setting] -> [Machine Export Setting].
2. Insert a USB memory into the USB port.
3. Enter a password. *1
4. Touch [Start].
5. [Result: OK] will be displayed.

NOTE

- ***1: If an XML file is to be used on the Auto Update function, register the same password beforehand to the MFP where a data is to be downloaded as [Machine Update Password].**

11.30.15 Machine Auto Update setting - Machine Update Password

(1) Use

- To set a password used to decrypt the update file of the machine.

(2) Procedure

- Enter the decryption password using the on-screen keyboard.

1. Current Password: Enter the currently used decryption password (only when the decryption password has been set).
2. New Password: Enter the new decryption password.
3. Re-Input Password: Enter the new decryption password again.

NOTE

- **Be sure not to forget the decryption password. It is required for reset.**

12. ENHANCED SECURITY

12.1 List of Enhanced Security

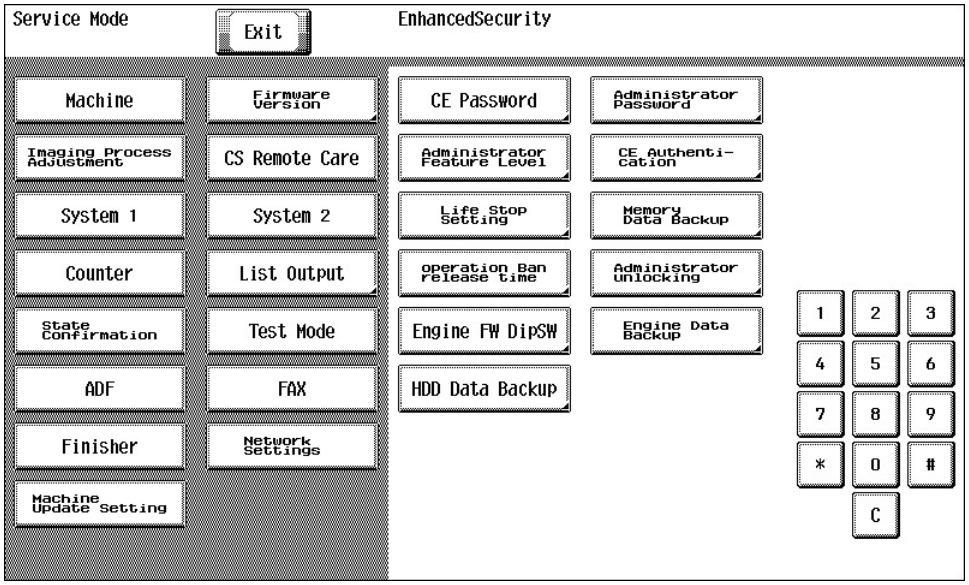

Enhanced Security	Ref. Page
CE Password	I.12.3.1 CE Password
Administrator Password	I.12.3.2 Administrator Password
Administrator Feature Level	I.12.3.3 Administrator Feature Level
CE Authentication	I.12.3.4 CE Authentication
Life Stop Setting	I.12.3.5 Life Stop Setting
Memory Data Backup	I.12.3.6 Memory Data Backup
operation Ban release time	I.12.3.7 operation Ban release time
Administrator unlocking	I.12.3.8 Administrator unlocking
Engine FW DipSW	I.12.3.9 Engine FW DipSW
Engine Data Backup	I.12.3.10 Engine Data Backup
HDD Data Backup	I.12.3.11 HDD Data Backup

12.2 Starting/Exiting

12.2.1 Starting procedure

1. Call the Service Mode to the screen.
2. Press the following keys in this order.
   - Stop -> 0 -> Clear
3. Enhanced Security menu will appear.

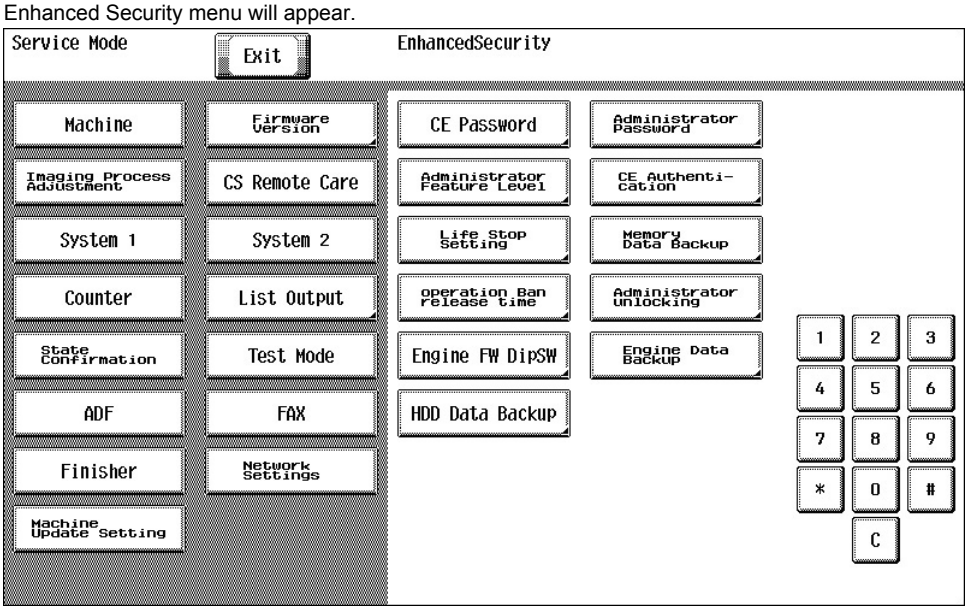

12.2.2 Exiting procedure

1. Touch [Exit] on the Service Mode screen.

2. Turn OFF the main power switch. Wait 10 seconds, then turn ON the main power switch again.

12.3 Enhanced Security

12.3.1 CE Password

(1) Use

- To set and change the CE password.
- The CE password needs to be 8 to 64 one-byte alphameric characters and symbols.

(2) Default setting

- 9272927292729272

(3) Procedure

- Enter the CE password (8 digits) on the on-screen keyboard.
  1. Current Password: Enter the currently using CE password.
  2. New Password: Enter the new CE password.
  3. Re-Input Password: Enter the new CE password again.

NOTE

- **When the following setting leads to the Password Rules [Enable], the password with the same letters as well as the password which is same as the previous one cannot be changed.**
  [Administrator Settings] -> [Security Settings] -> [Security Details]
- **NEVER forget the CE password. When forgetting the CE password, call responsible person of KM.**

12.3.2 Administrator Password

(1) Use

- To set and change the administrator password.
- Use this function when the administrator forget the administrator password because a new password can be set without entering the current administrator password with this.
- The administrator password needs to be 8 to 64 one-byte alphameric characters and symbols.

(2) Default setting

- 1234567812345678

(3) Procedure

- Enter the administrator password on the on-screen keyboard.
  1. New Password: Enter the new administrator password.
  2. Re-Input Password: Enter the new administrator password again.

NOTE

- **When the following setting leads to the Password Rules [Enable], the password with the same letters, the password which is same as the previous one and the password of less than eight digits cannot be changed.**
  [Administrator Settings] -> [Security Settings] -> [Security Details]

12.3.3 Administrator Feature Level

(1) Use

- To set which modes to be allowed for the administrator to use in Service Mode.
- Use when allowing the administrator to use some modes in Service Mode.
- The modes allowed for the administrator to use in each setting are as follows.

Administrator settings function			Level 1	Level 2
[System Setting] -> [Expert Adjustment]	Printer Adjustment	Erase Leading Edge	-	○
	Scanner Area	Scanner Adjustment: Leading Edge	-	○
		Scanner Adjustment: Centering	-	○
		Horizontal Adjustment	-	○
		Vertical Adjustment	-	○
	ADF Adjustment	Centering	-	○
		Original Stop Position	-	○
		Centering Auto Adjustment	-	○
		Auto Adj. of Stop Position	-	○
	User Paper Settings		-	○
[System Setting] -> [Standard Size Setting]	Original Glass Original Size Detect		-	○
	Foolscap Size Setting		-	○

(2) Default setting

- Prohibit

(3) Setting item

- Level1

- Level2
- “Prohibit”

12.3.4 CE Authentication

- The setting item “OFF” will not be displayed when the [Password Rules] is set to “Enable”.
- It will not be displayed when the Remote Panel Settings is set to “ON”.

(1) Use

- To determine whether or not to authenticate CE password as entering Service Mode.
- Use when authenticating CE password as entering Service Mode.

NOTE

- **For setting the [Password Rules] to “Enable”, set the CE Authentication to "ON" and change the initial CE password beforehand.**
- **Before setting the Remote Panel Settings to “ON”, set the CE Authentication to "ON".**

(2) Default setting

- ON

(3) Setting item

- “ON”
- OFF

12.3.5 Life Stop Setting

(1) Use

- To select whether or not to stop a print cycle when the drum unit, developing unit, transfer belt, and fusing unit reach its service life.

(2) Default setting

- Enable

(3) Setting item

- “Enable”
- Off

12.3.6 Memory Data Backup

(1) Use

- To backup the data stored in the memory region on the MFP board to the flash memory.
- To backup current data in order to prevent data in the memory region on the MFP board from being erased unexpectedly.
- To backup data manually. It usually makes backup every hour automatically.
- Backup data can be restored by following the specified procedure when the trouble (CD3XX) occurred.
- Refer to “TROUBLESHOOTING” for details on restoration procedure.
  K.3.16.17 CD3##

(2) Procedure

1. Touch [Memory Data Backup].
2. Touch [Start] to start making a backup.
3. Check the message [Backup is completed.], and turn main power switch OFF. Wait for ten seconds or more and turn main power switch back ON.

12.3.7 operation Ban release time

(1) Use

- To set the time that elapses before the machine releases an access lock that is activated after the CE password authentication.
- To set the period of time that elapses before the machine releases the access lock, which aims to prevent the unintentional release of the access lock.
- After the CE password authentication, if the access lock is activated, the lock release timer starts to operate the following procedures.
  1. Main power switch is turned OFF and On.
  2. Menu -> [Counter] -> [Print List]
  3. Touch [Display Keypad], displaying 10-key pad.
  4. The lock release timer starts to operate by input the Stop -> 0 -> 9 -> 3 -> 1 -> 7.
  5. When the timer reaches the time specified in this setting, the access lock is released.

(2) Default setting

- 5 (minutes)

(3) Setting range

- 1 to 60 (minutes)

NOTE

- **When Enhanced Security Mode is set to ON in [Administrator Settings] -> [Security Settings] -> [Enhanced Security Mode], the period of time that can be set in this setting is 5 minutes or more.**

12.3.8 Administrator unlocking

(1) Use

- To release an access lock that is activated after an administrator password authentication.
- To release the access lock with service authority when an administrator password authentication fails and the access lock is activated.
- When the main power switch is turned OFF and ON or the period of time set in the Release Time Settings elapses, the machine releases the access lock that is activated after the administrator password authentication.
  In addition to these operations, this setting provides another way to release the access lock.

(2) Procedure

1. Touch [Administrator unlocking].
2. Touch [unlocking] to release an access lock.
3. When [OK] is displayed, touch [OK].

12.3.9 Engine FW DipSW

- It will be displayed when the following setting shows that switch No.59 is set to [01] at HEX assignment.
  [Service Mode] -> [System 2] -> [Software Switch Setting]

(1) Use

- To make printer engine settings.
- The following table shows DIP switches that can be set in this machine.

Switch No.	Function	Ref. page
1	Not used	-
2	Not used	-
3	New Release Disable mode	I.12.3.9.(3).(a) New Release Disable mode
4	Not used	-
5	Choice of high humidity circumstance	I.12.3.9.(3).(b) Choice of high humidity circumstance
6	Choice of warm-up complete temperature	I.12.3.9.(3).(c) Choice of warm-up complete temperature
7 : 10	Not used	-
11	Choice of fusing roller rotation while waiting	I.12.3.9.(3).(d) Choice of fusing roller rotation while waiting
12	Not used	-
13	Choice of securing fusibility	I.12.3.9.(3).(e) Choice of securing fusibility
14 : 17	Not used	-
18	Choice of FS-533 tray home position switching	I.12.3.9.(3).(f) Choice of FS-533 tray home position switching
19 : 20	Not used	-
21	Choice of drum unit slight rotation	I.12.3.9.(3).(g) Choice of drum unit slight rotation
22	Choice of main scan direction white line correction	I.12.3.9.(3).(h) Choice of main scan direction white line correction
23	Not used	-
24	Choice of continuous temperature control after printing	I.12.3.9.(3).(i) Choice of continuous temperature control after printing
25	Not used	-
26	Choice of printing pause time during temperature increase inside the machine	I.12.3.9.(3).(j) Choice of printing pause time during temperature increase inside the machine
27	Not used	-
28	Choice of fusing mode for index paper	I.12.3.9.(3).(k) Choice of fusing mode for index paper

(2) Procedure

1. Touch [Engine FW DipSW].
2. Touch the key that corresponds to the switch No. of the function to be set and check the key is highlighted (ON state) in reverse video.
3. Touch [OK].

(3) Details of Each Function

(a) New Release Disable mode

- To enable a unit that is temporarily used for troubleshooting or other purposes to be used again as a new unit in another machine, New Release Disable mode is provided.
- Applicable units are the following that have the new unit detection feature.
  Drum unit, Developing unit

1. Open the front door.
2. Touch [Service Mode] -> [Enhanced Security] -> [Engine FW DipSW].

3. Touch [3] and check the key is highlighted (ON state) in reverse video.
4. Touch [OK].
5. Close the front door.
   By closing the front door, the New Release Disable mode takes effect.

(b) Choice of high humidity circumstance

- Out of PPM control for preventing the paper from losing its fusibility, "high humidity circumstance mode" which controls paper curling in high humidity is prohibited.
- When this setting is ON, high humidity circumstance mode for PPM control will not be conducted.

Procedure

1. Touch [Service Mode] -> [Enhanced Security] -> [Engine FW DipSW].
2. Touch [5] and check the key is highlighted (ON state) in reverse video.
3. Touch [OK].

(c) Choice of warm-up complete temperature

- It ensures fusibility in monochrome printing with suggested paper for Europe marketing area.

OFF	Normal warm-up time (default)
ON	The warm-up time when in monochrome 30 seconds mode becomes longer.

Procedure

1. Touch [Service Mode] -> [Enhanced Security] -> [Engine FW DipSW].
2. Touch [6] and check the key is highlighted (ON state) in reverse video.
3. Touch [OK].

(d) Choice of fusing roller rotation while waiting

- It sets whether to constantly rotate the fusing motor or not while waiting the job for MFP.

OFF	The fusing motor stops after 30 minutes in waiting condition. Steadiness while waiting has a priority. (default)
ON	The fusing motor constantly rotates while waiting. It ensures the fusibility when immediately starts printing from the waiting status.

Procedure

1. Touch [Service Mode] -> [Enhanced Security] -> [Engine FW DipSW].
2. Touch [11] and check the key is highlighted (ON state) in reverse video.
3. Touch [OK].

(e) Choice of securing fusibility

- It sets whether to conduct printing wait or not for ensuring fusibility in low temperature and low humidity.

OFF	Without printing wait (default)
ON	With printing wait

Procedure

1. Touch [Service Mode] -> [Enhanced Security] -> [Engine FW DipSW].
2. Touch [13] and check the key is highlighted (ON state) in reverse video
3. Touch [OK].

(f) Choice of FS-533 tray home position switching

- It switches the tray home position for FS-533.

OFF	Tray home position becomes the low limit position. (default)
ON	Tray home position becomes the paper receiving position.

Procedure

1. Touch [Service Mode] -> [Enhanced Security] -> [Engine FW DipSW].
2. Touch [18] and check the key is highlighted (ON state) in reverse video.
3. Touch [OK].

(g) Choice of drum unit slight rotation

- It sets whether to conduct slight rotation control or not for the photo conductor.
- When the printing is continued with lower coverage, abrasion of the photo conductor and the cleaning blade becomes large and may cause noise when slightly rotating the drum unit.
  It is used for preventing noise caused by the slight rotation of the photo conductor.

OFF	Conducts slight rotation control. (default)
ON	Does not conduct slight rotation control

Procedure

1. Touch [Service Mode] -> [Enhanced Security] -> [Engine FW DipSW].
2. Touch [21] and check the key is highlighted (ON state) in reverse video.
3. Touch [OK].

(h) Choice of main scan direction white line correction

- When printing is continued with lower coverage, filming may occur to the transfer belt which may cause the main scan direction white lines.
- By setting this ON, the toner will be supplied to the transfer belt by the toner patch during image stabilization to prevent white lines to occur.

The toner consumption increases by using this setting. Choose the setting suitable for the user.

OFF	Does not conduct toner patch for the white lines (default)
ON	Conducts toner patch for the while lines

Procedure

1. Touch [Service Mode] -> [Enhanced Security] -> [Engine FW DipSW].
2. Touch [22] and check the key is highlighted (ON state) in reverse video.
3. Touch [OK].

(i) Choice of continuous temperature control after printing

- To select the fusing unit temperature adjustment control performed when a print job sent from PC is completed.
- When [Administrator Settings] -> [System Settings] -> [Power Supply/Power Save Settings] -> [Enter Power Save Mode] is set to "Immediately", select whether or not to turn OFF the fusing heater immediately after a print job from PC is completed.
  - OFF: The fusing heater is turned OFF immediately after printing a job sent from PC. (default)
  - ON: The temperature control continues until the next sleep request is sent from the controller.

Procedure

1. Touch [Service Mode] -> [Enhanced Security] -> [Engine FW DipSW].
2. Touch [24] and check the key is highlighted (ON state) in reverse video.
3. Touch [OK].

(j) Choice of printing pause time during temperature increase inside the machine

- The printing pauses for a specified period of time in order to prevent toner from adhering when the temperature inside increases.

OFF	Short pause (default)
ON	Pause for printing becomes longer. Temperature inside comparatively becomes low which may improve the image quality.

Procedure

1. Touch [Service Mode] -> [Enhanced Security] -> [Engine FW DipSW].
2. Touch [26] and check the key is highlighted (ON state) in reverse video.
3. Touch [OK].

(k) Choice of fusing mode for index paper

- When index paper is used, change the fusing temperature control mode to reduce the curling of the paper.

OFF	Normal temperature control for index paper (default)
ON	Change the temperature control mode that is lowered the target temperature to reduce the curling of the paper.

Procedure

1. Touch [Service Mode] -> [Enhanced Security] -> [Engine FW DipSW].
2. Touch [28] and check the key is highlighted (ON state) in reverse video.
3. Touch [OK].
4. Turn OFF the main power switch and turn it ON again more than 10 seconds after.

(4) Notes when using the New Release Disable mode

NOTE

<1> Before starting the mode

- **Output the list in [Service Mode] -> [List Output] to check the information on the wear-out rate of each unit and keep the Dmax density adjustment value.**
  Replace units that have reached their life or that are near life with new ones, and perform New Release.

<2> During the New Release Disable mode

- **The New Release Disable mode is subject to the condition that the New Release Disable mode should not be used for a long period, i.e. duration of printing only several tens of sheets. Units used in the New Release Disable mode for a long time cannot be guaranteed as new ones.**
- **If a unit (developing unit) which has reached its life or for which a accumulated rotation time excess warning has been issued are replaced with a new one in the New Release Disable mode, the new unit life is judged as normal and the accumulated rotation time excess warning is reset.**
- **In the New Release Disable mode, the drum unit life counter is not reset and it continues to count in a normal manner. If the counter reading becomes close to the value at which an accumulated rotation time excess warning is issued or becomes close to the end of life value, the accumulated rotation time excess warning or the end of life warning can be issued in the New Release Disable mode.**
  (If the drum unit counter should reach the end of life value while temporarily using a new drum unit in the New Release Disable mode, turn OFF the New Release Disable mode, open and close the front door (or turn the main power switch OFF and ON), and perform New Release in a normal manner. In this case, the previous drum unit, which has been temporarily removed, cannot be used again.)
- **After activating the New Release Disable mode in [Engine FW DipSW], do not turn OFF and ON the main power switch or do not let the machine go into the sleep mode until the work in the New Release mode is completed.**
  (In case that the main power switch is turned OFF or the machine goes into the sleep mode, be sure to open the front door and turn the main power switch ON or activate the machine from the sleep mode. Then turn ON the New Release Disable mode and close the front door.)

<3> After finishing work in New Release Disable mode

- **When continuing to use the new unit used in the New Release Disable mode in the same machine, turn OFF the new Release Disable mode and open and close the front door (or turn OFF and ON the main power switch) to perform New Release.**
- **To reinstall the previous unit used in the machine, open the front door, turn OFF the New Release Disable mode, replace the new unit with the previous unit, and close the front door (or turn the main power switch OFF and ON).**
  In this case, perform Initialize + Image Stabilization, Gradation Adjustment, and input of the previous Dmax density adjustment value in service mode. If these adjustments are not performed, gradation reproducibility cannot be guaranteed.

- **After temporarily using a new drum unit in the New Release Disable mode, before reinstalling the previous drum unit, be sure to check the reading of the drum unit life counter in [Service Mode] -> [Counter] -> [Life] to learn that New Release is not performed on the new drum unit, i.e. the counter value have not decreased.**
  There is no way to judge whether New Release is performed on the new drum unit or not from the appearance of the unit. Checking the counter reading is necessary to avoid bringing back the drum unit on which New Release is performed, assuming that the drum unit remains new.

12.3.10 Engine Data Backup

(1) Use

- To back up or restore settings configured for the engine.
- Used to save or restore settings when the printer control board is replaced.
- The backup data is stored in the SSD board.

(2) Procedure

(a) Engine Data Save Mode (backup)

NOTE

- **This is not displayed when the trouble code C-4801 "Machine unit board failure" occurs.**

1. Touch [Service Mode] -> [Enhanced Security] -> [Engine Data Backup].
2. Touch [Engine Data Save Mode], and press the Start key.
3. Select [Yes], and press the Start key again.
4. Check that the result "OK" appears.

(b) Engine Data Reflect Mode (restore)

NOTE

- **This function is available only when the data backed up in [Engine Data Save Mode] is stored in the SSD board and the trouble code C-4802 "Main unit backup data miscompare" occurs.**

1. Touch [Service Mode] -> [Enhanced Security] -> [Engine Data Backup].
2. Touch [Engine Data Reflect Mode], and press the Start key.
3. Select [Yes], and press the Start key again.
4. Check that the result "OK" appears.
5. Turn OFF the main power switch and turn it ON again more than 10 seconds after.

12.3.11 HDD Data Backup

(1) Use

- To back up or restore the settings of the machine and the image data stored in the box.

KM Format Backup	Save the settings of the machine as a XML data, and save the image data in the box in internal format (RAW data) to the HDD connected with a USB. A backup starts after making a confirmation of if the storage is enough.

- Settings an image data in the box to be backed up and restored are as follows.
  - Setting data for MFP (User Settings, Administrator Settings, part of each settings in Service Mode)
  - User authentication, Account track settings information
  - One-touch Registration Address Information
  - Images saved in the box (User box (Public, Personal, Group, and Encrypted PDF box))
  - Information to compose a box (setting data exclusive for box)
- Conditions required to backup/restore are as follows.
  - To use a self-power external HDD (a type to supply power from outside)
    A bus-power external HDD shall not be used.
  - After connecting an external HDD to the machine via a USB, the data is converted with ext3 format automatically.
  - The backup will be executed after the backup data which has already existed in the external HDD is deleted automatically.
  - Data of only one model can be saved in the external HDD.
  - Cancellation during a backup is allowed. However cancellation during formatting an external HDD is not allowed.
  - Operation of backup/restore is not allowed when a trouble or warning occurred.
  - Operation of backup/restore is not allowed when a timer job has been reserved.

(2) Setting item

- KM Format Backup
- Restore
- Enter Password

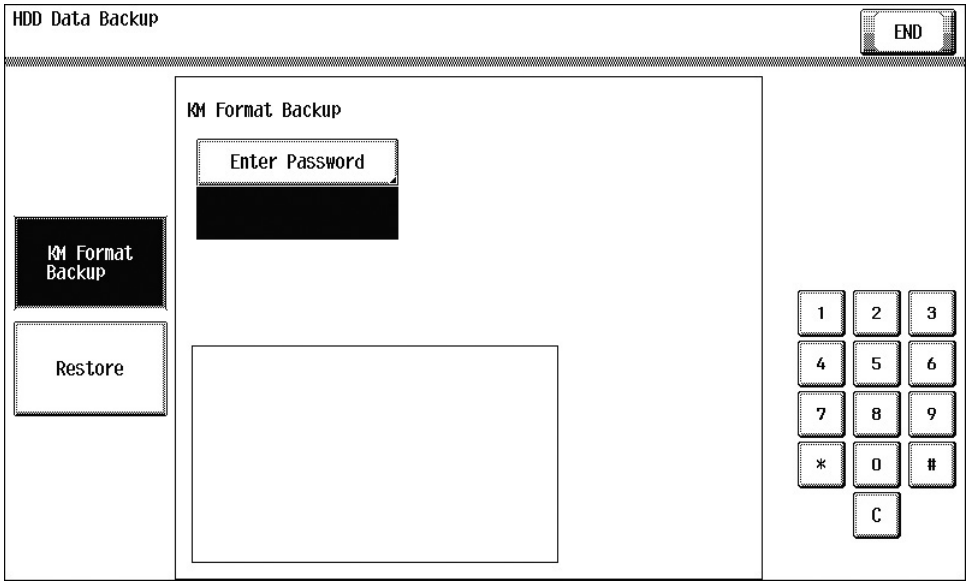

(3) Procedure

NOTE

- **Set [Utility] -> [Administrator Settings] -> [Security Settings] -> [Security Details] -> [HDD backup data Settings. (5/5)] shall be set to [Allow].**
  If [Restrict] is set, the machine cannot be used.
- **Be sure to turn OFF and ON the main power switch of the machine after performing backup/restore.**

(a) Backup

1. Connect the USB of an external HDD to the USB port of an MFP. (USB NG will be displayed when the USB is not recognized correctly.)
2. Touch [Service Mode] -> [Enhanced Security] -> [HDD Data Backup].
3. Select [KM Format Backup].
4. Touch [Enter Password], enter an encryption password using 1 to 32 characters, then touch [END].
5. Touch [Start]. (“Processing” will be displayed.)
   Touch [Cancel] if you want to stop the backup.
6. After completing the backup, [Result OK] will be displayed.
7. Turn OFF and ON the main power switch.

(b) Restore

1. Connect the USB of an external HDD to the USB port of an MFP.
2. Touch [Service Mode] -> [Enhanced Security] -> [HDD Data Backup].
3. Select [Restore].
4. Touch [Enter Password], enter a decryption password using 1 to 32 characters, then touch [END].
5. Touch [Start]. (“Processing” will be displayed.)
   Touch [Cancel] if you want to stop the restore.
6. After completing the restore, [Result OK] will be displayed.
7. Turn OFF and ON the main power switch.

13. BILLING SETTING

Billing Setting

- When using the optional upgrade kit UK-204 and license kit LK-101 v3, LK-102 v3, LK-104 v3, LK-105 v3, LK-106, LK-107, LK-108, LK-110 or LK-111, license management is done with the following procedures.
  [Service Mode] -> [Billing Setting] -> [License Management]
- [License Management] can set Activation/Deactivation of each i-Option functions, Repair/Initialize of functions for troubleshooting, or etc.

13.1 List of billing setting

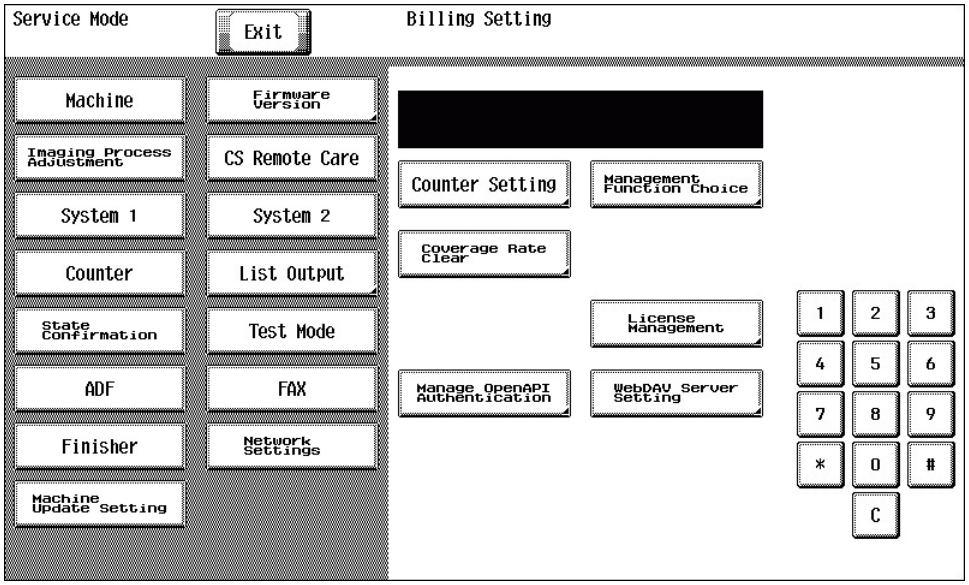

Billing Setting		Ref. Page
Counter Setting		I.13.3.1 Counter Setting
Management Function Choice		I.13.3.2 Management Function Choice
Coverage Rate Clear		I.13.3.9 Coverage Rate Clear
License Management	Activation	I.13.3.10 License management - Activation
	Deactivation	I.13.3.11 License management - Deactivation
	Repair *1	I.13.3.12 License management - Repair
	Initialize	I.13.3.13 License management - Initialize
	Request Code	I.13.3.14 License management - Request Code
	List	I.13.3.15 License management - List
	Function List	I.13.3.16 License management - Function List
Manage OpenAPI Authentication	Restriction Code	I.13.3.17.(1) Restriction Code
	Region Code	I.13.3.17.(2) Region Code
WebDAV Server Setting		I.13.3.18 WebDAV Server Setting

- *1: It is displayed only when “K.14.3.1 License management error” occurs.

13.2 Starting/Exiting

13.2.1 Starting procedure

1. Call the Service Mode to the screen.
2. Press the following keys in this order.
   - Stop -> 9
3. Billing Setting menu will appear.

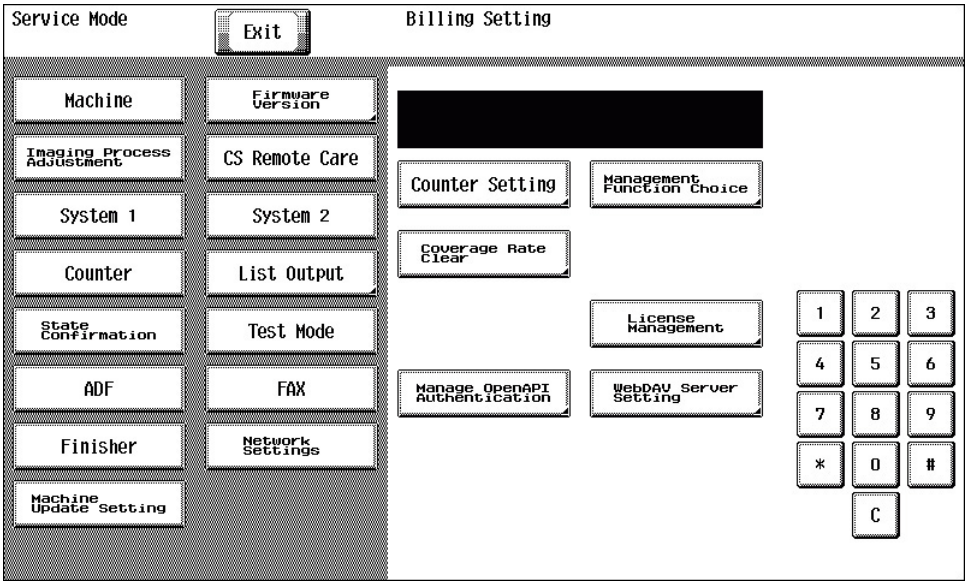

13.2.2 Exiting procedure

1. Touch [Exit] on the Service Mode screen.
2. Turn OFF the main power switch. Wait 10 seconds, then turn ON the main power switch again.

13.3 Billing Setting

13.3.1 Counter Setting

(1) Use

- To set the counting method for the total counter, size counter and banner paper counter.
- To set the size regarded as the large size (2 counts.)
- Use to change the counting method for the counters.

(2) Total Counter

(a) Default setting

- Japan: “Mode 1”
- US, Europe, Others 1, Others 2, Others 3, Others 4, Others 5: “Mode 2”

(b) Setting item

- Mode 1: 1 count per 1 copy cycle
- Mode 2: Large size is double counts

NOTE

- **The content of this setting is reflected in the count method with the key counter.**
- **“Others 1” to “Others 4” are setting items in [Marketing Area] available from Service Mode.**
  I.11.14.1 Marketing Area

(3) Large Size Counter

(a) Default setting

- US: A3 and 11 x 17
- Europe, Others 1, Others 2, Others 3, Others 4, Others 5: A3, B4, 11 x 17, and 8 $^{1}/_{2}$ x 14
- Japan: Not counted

(b) Setting item

A3/11 x 17	When it exceeds 279 mm in the main scan direction and 420 mm in the sub scan direction (exceeds 399 mm at fax scan), it is regarded as the large size.
A3/B4/11 x 17/8 $^{1}/_{2}$ x 14	When it exceeds 215 mm in the main scan direction and 355 mm in the sub scan direction (exceeds 337 mm at fax scan), it is regarded as the large size.
A3/11 x 17/B4/8 $^{1}/_{2}$ x 14/Foolscap	When it exceeds 203 mm in the main scan direction and 330 mm in the sub scan direction (exceeds 313 mm at fax scan), it is regarded as the large size (However the size in the main scan direction changes according to the foolscap size setting.)

- No Count
- A3/11 x 17
- A3/B4/11 x 17/8 $^{1}/_{2}$ x 14
- A3/11 x 17/B4/8 $^{1}/_{2}$ x 14/Foolscap

NOTE

- **When the Size Counter setting is set to “Not counted”, the machine operate with following conditions regardless of the each control panel settings.**
  - **Total Counter: Mode1**

- **Banner Paper Count Mode: Mode1**
- **Banner Counter Double Count Mode: OFF**

(c) Count-up table

Print mode	1-Sided				2-Sided			
Size	Sizes other than those specified		Specified sizes		Sizes other than those specified		Specified sizes	
Mode	Mode		Mode		Mode		Mode	
	1	2	1	2	1	2	1	2
Total	1	1	1	2	2	2	2	4
Size	0	0	1	1	0	0	2	2
2-sided Total	0	0	0	0	1	1	1	1

- 0: No count
- 1: 1 count
- 2: 2 counts
- 3: 3 counts
- 4: 4 counts

(4) Banner Paper Counter Mode

- When printing on the long paper (457.2 mm or over), the counting value will be the total of the value set by the total counter mode and the value by this setting.

(a) Default setting

- Mode 4

(b) Setting item

- Mode 1: + 0 count
- Mode 2: + 1 count
- Mode 3: + 2 counts (457.2 to 915.0 mm will be + 1 count)
- Mode 4: + 3 counts (457.2 to 686.0 mm will be + 1 count, and 686.1 to 915.0 mm will be + 2 count)

(5) Banner Counter Double Count Mode

- To set whether to use normal count or double count when printing long size paper.
- When “ON” is selected, double count is applied to only long size paper.

(a) Default setting

- OFF

(b) Setting item

- ON
- “OFF”

(6) Count methods that are the combination of each setting

- The count method used when printing long size paper depends on the combination of the Counter Setting: Settings in Banner Paper Counter Mode and Banner Counter Double Count Mode. The following shows details on count methods that are the combination of each setting.

Total Counter	Banner Paper Counter Mode	Banner Counter Double Count Mode	Paper size	Count
Mode 1	Mode 1	OFF	Normal size	1 count
			Long size	1 count
		ON	Normal size	1 count
			Long size	2 counts
	Mode 2	OFF	Normal size	1 count
			Long size	2 counts
		ON	Normal size	1 count
			Long size	4 counts
	Mode 3	OFF	Normal size	1 count
			Long size 457.3 to 915.0 mm	2 counts
			Long size 915.1 mm or more	3 counts
		ON	Normal size	1 count
			Long size 457.3 to 915.0 mm	4 counts
			Long size 915.1 mm or more	6 counts
	Mode 4	OFF	Normal size	1 count
			Long size 457.3 to 686.0 mm	2 counts

Total Counter	Banner Paper Counter Mode	Banner Counter Double Count Mode	Paper size	Count
			Long size 686.1 to 915.0 mm	3 counts
			Long size 915.1 mm or more	4 counts
		ON	Normal size	1 count
			Long size 457.3 to 686.0 mm	4 counts
			Long size 686.1 to 915.0 mm	6 counts
			Long size 915.1 mm or more	8 counts
Mode 2	Mode 1	OFF	Small size	1 count
			Large size	2 counts
			Long size	2 counts
		ON	Small size	1 count
			Large size	2 counts
			Long size	4 counts
	Mode 2	OFF	Small size	1 count
			Large size	2 counts
			Long size	3 counts
		ON	Small size	1 count
			Large size	2 counts
			Long size	6 counts
	Mode 3	OFF	Small size	1 count
			Large size	2 counts
			Long size 457.3 to 915.0 mm	3 counts
			Long size 915.1 mm or more	4 counts
		ON	Small size	1 count
			Large size	2 counts
			Long size 457.3 to 915.0 mm	6 counts
			Long size 915.1 mm or more	8 counts
	Mode 4	OFF	Small size	1 count
			Large size	2 counts
			Long size 457.3 to 686.0 mm	3 counts
			Long size 686.1 to 915.0 mm	4 counts
			Long size 915.1 mm or more	5 counts
		ON	Small size	1 count
			Large size	2 counts
			Long size 457.3 to 686.0 mm	6 counts
			Long size 686.1 to 915.0 mm	8 counts
			Long size 915.1 mm or more	10 counts

NOTE

- **When the Size Counter setting is set to “Not counted”, the machine operate with following conditions regardless of the each control panel settings.**
  - **Total Counter: Mode1**
  - **Banner Paper Count Mode: Mode1**
  - **Banner Counter Double Count Mode: OFF**

13.3.2 Management Function Choice

- To set whether or not the following items are to be mounted.
  Key Counter, Management Device (Data controller), Authentication Device, or Vendor

NOTE

- **It will not be displayed when the following setting is set to “ON”.**
  [Administrator Settings] -> [Security Settings] -> [Enhanced Security Mode]
- **When the setting shows that [Management Device 2] or [Vendor 2] is mounted, the following applications will be invalid.**
  PC FAX transmission / HDD TWAIN/PS Box Operator / PS Scan Direct / PS Job Spooler
  Also, the following setting will be set to “OFF”.
  [Administrator Settings] -> [Security Settings] -> [Function Management Settings] -> [Network Function Usage Settings]

13.3.3 Management Function Choice - Key Counter IF Vendor

- Not used.

13.3.4 Management Function Choice - Authentication Device 2

(1) Use

- To set whether or not the authentication device 2 is installed.
- Set when the authentication unit (biometric type or card type) is mounted.

NOTE
- **When using the authentication device including AU-102 and AU-201, the loadable device driver needs to be installed.**
- **I.11.15.29 Driver Install**
- **E.1.3.1.(3) IC card information setting procedures**

Card	Uses IC card authentication system (AU-201/SCL-010/AU-201H/AU-202H/YSoft card reader)
Body	Uses biometrics (finger vein) authentication system (AU-102)
Card 3	Uses IC card authentication device for PKI card system

- When selecting [Body], set a film timeout interval, capture trial time and authentication trial time.
- When selecting [Card], a response timeout interval is displayed. (The interval is unchangeable.)
- [Card 3] will be displayed only when the following setting shows that switch No.12 is set to [00000010] at Bit assignment/[02] at HEX assignment.
  [Service Mode] -> [System 2] -> [Software Switch Setting]

(2) Setting item

Authentication Mode
- Card
- Body

(3) Installation procedures of authentication unit

(a) AU-102

1. Install the AU-102 loadable driver (BIO_LDR.tar) to the main unit.
2. Install the AU-102 to the main unit.
3. Select [Body] in [Service Mode] -> [Billing Settings] -> [Management Function Choice] -> [Authentication Device 2].
4. Turn off the main power switch and turn it on again more than 10 seconds after.
5. Register the authentication user data.

(b) AU-201

1. Install the loadable driver (ICC_LDR.tar) to the main unit. *1,*2,*3
2. Install the AU-201 to the main unit.
3. Select [Card] in [Service Mode] -> [Billing Settings] -> [Management Function Choice] -> [Authentication Device 2].
4. Turn off the main power switch and turn it on again more than 10 seconds after.
5. Register the authentication card data.

Note *1
- A combination of the loadable driver and the IC card information setting file will be supplied as a loadable driver by KM.

Note *2
- The loadable driver to be installed varied according to the type of the card. Identify the type of the card requiring authentication and install the correct loadable driver.

Loadable driver name (KM standard setting)	Corresponding card type
AU-201 loadable driver (FeliCa IDm)	FeliCa IDm, FeliCa SSFC, FeliCa FCF, FeliCa FCF(Campus), TypeA
AU-201 loadable driver (FeliCaPrivate)	FeliCaPrivate

Note *3
- If FeliCa IDm, FeliCa SSFC, FeliCa Private, or related card requiring detailed settings is to be used, make the detailed settings by using either one of the following methods:
  1. Using the Auth Device Tool Advanced for AU-201, prepare a combination of the loadable driver and the IC card information setting file and export it as a loadable driver.
     E.1.3.1.(3) IC card information setting procedures
  2. Using the Auth Device Tool Advanced for AU-201, prepare the IC card information setting file only and install the loadable driver in the MFP. Then, using the PageScope Data Administrator, write the IC card information setting file in the MFP.
     E.1.3.1.(3) IC card information setting procedures

E.g.: Information setting sample when the FeliCa SSFC card is used

Information to be obtained from the administrator		
Items of Felica SSFC detail setting	Sample-data (decimal number)	Setting value (hexadecimal number)
Room number	37	00 25
Floor number	15	00 0F
Building number	50	00 32
Area number	85	00 55
Security level	2	00 02
Company identification code (CL code) *1	06BGLQVX17 (ASCII code)	30 36 42 47 4C 51 56 58 31 37
Company code *2	CompanyA (ASCII code)	CompanyA

*1: The character length of the company code is 10 bytes.
*2: Use alphabetical upper case/lower case characters and numeric characters for Company code. When the company code is not set, this space will be left blank.

(c) Miscellaneous card readers

- The same setting method as that for AU-201 applies for other card readers.

- The following loadable drivers are necessary.

Card reader	Loadable driver name (KM standard setting)	Corresponding card type
SCL-010	SCL-010 loadable driver (Default: TypeA) *1, *2	• TypeA • FeliCa IDm • TypeA and FeliCa IDm
AU-201H	AU-201H loadable driver	HID Prox *4
AU-202H	AU-202H loadable driver *2	HID iClass
KM USB Reader v2 MultiReader HF	Loadable driver for YSoft card reader (Default: HID Prox) *3	Mifare
KM USB Reader v2 Legic Advant		LEGIC
KM USB Reader v2 ASK FSK 125kHz		EM4100, EM4102, RFID 125kHz
KM USB Reader v2 Mot/Ind W26		Indala
KM USB Reader v2 HID Prox		HID Prox
KM USB Reader v2 HID iCLASS		HID iCLASS

Note *1
- A combination of the loadable driver and the IC card information setting file will be supplied as a loadable driver by KM.

Note *2
- If cards of FeliCa IDm of SCL-010 and HID iClass of AU-202H that require detailed settings are to be used, make the detailed settings by using either one of the following methods:
  1. Using the Auth Device Tool Advanced for SCL-010 or Auth Device Tool Advanced for AU-202H, prepare a combination of the loadable driver and the IC card information setting file and export it as a loadable driver.
     E.1.3.1.(3) IC card information setting procedures
  2. Using the Auth Device Tool Advanced for SCL-010 or Auth Device Tool Advanced for AU-202H, prepare the IC card information setting file only and install the loadable driver in the MFP. Then, using the PageScope Data Administrator, write the IC card information setting file in the MFP.
     E.1.3.1.(3) IC card information setting procedures

Note *3
- If a YSoft card reader is used, all types of card will be reported as HID Prox card to the authentication program (Default).
- To report the card type other than HID Prox to the authentication program, choose the corresponding card type shown in the following list.

Card Reader Name	Readable Card Type	Card type to be reported to the authentication program (Default) *3-5, *3-7	IC Card Information Setting (card type to be reported) *3-6 E.1.3.1 IC card information setting tool of AU-201/AU-202H/SCL-010/YSoft card reader
KM USB Reader v2 MultiReader HF	Mifare	HID Prox	TypeA (1) *3-1,*3-4
KM USB Reader v2 Legic Advant	LEGIC	HID Prox	TypeA (1) *3-1,*3-4
KM USB Reader v2 ASK FSK 125kHz	EM4100, EM4102, RFID 125kHz	HID Prox	EM4100/ EM4102/ RFID 125kHz
KM USB Reader v2 Mot/Ind W26	Indala	HID Prox	Indala
KM USB Reader v2 HID Prox	HID Prox	HID Prox	HID Prox (1) *3-2,*3-4
KM USB Reader v2 HID iCLASS	HID iCLASS	HID Prox	HID iCLASS (1) *3-3,*3-4

- *3-1 The content (ID) to be read from the type A card setting differs from which to be read by using AU-201.
- *3-2 The content (ID) to be read from the HID Prox card setting differs from which to be read by using AU-201H.
- *3-3 The content (ID) to be read from the HID iCLASS card setting differs from which to be read by using AU-202H.
- *3-4 When add the YSoft card reader to the authentication network composed of the present AU-201, 201H and 202H, the ID may vary depending on the card reader. Therefore, it is required to set the card type to TypeA (1), HID Prox (1) or HID iCLASS (1) and register the card again.
- *3-5 For the content to be read from the HID Prox card, since the ID length is fixed to 16 bytes, the unused part will be bridged with 0xFF.
- *3-6 If a card type other than HID Prox is selected, the card ID type will be set to up to 512 bytes, the card ID length will be reported together with the card ID.
- *3-7 If the card type is set to HID Prox by using the LDAP-IC card authentication, specify the card ID type to be sent to the LDAP server as shown below.
  1. Software switch No.135 Hex: 00 Reports that the 1st byte shows the ID length of the card, the 2nd byte and after shows the card ID. (Default)
  2. Software switch No.135 Hex: 01 Reports the card ID with the ID length including the 1st byte.

Note *4
- If the card type is set to HID Prox by using the LDAP-IC card authentication, specify the card ID type to be sent to the LDAP server as shown below.

1. Software switch No.135 Hex: 00 Reports that the 1st byte shows the ID length of the card, the 2nd byte and after shows the card ID. (Default)
2. Software switch No.135 Hex: 01 Reports the card ID with the ID length including the 1st byte.

13.3.5 Management Function Choice - Key Counter Only

(1) Use

- To set whether or not the key counter is installed.
- Set when the key counter is mounted.
- Select [Message] when the key counter is mounted.

(2) Color Mode

- Not used

(3) Message

(a) Use

- Select the message type when the administrative unit is mounted.

Type 1	Message for key counter
Type 2	Message for card scanning
Type 3	Message for ID management
Type 4	Message for remote SW

(b) Setting item

- Type 1
- Type 2
- Type 3
- Type 4

(4) Confirmation copy

(a) Use

- Set whether to allow a confirmation copy when a key counter is installed.

(b) Default setting

- Ban

(c) Setting item

- License
- “Ban”

(5) The next job reservation

(a) Use

- Set whether to allow the reservation of the next job when a key counter is installed.

(b) Default setting

- Ban

(c) Setting item

- License
- “Ban”

NOTE

- **The setting is available only when user authentication and account track are set “OFF” with [Administrator Settings] -> [User Authentication/Account Track] -> [General Settings].**

(6) Count Setting

(a) Use

- To set the count timing used when the key counter is installed.

(b) Default setting

- Paper feed

(c) Setting item

- “Paper feed”
- Paper out

13.3.6 Management Function Choice - Management Device

(1) Management Device 2

(a) Use

- To set whether or not the management device 2 is installed.
- Select the Management Setting Mode

Mode 1	Use contact type device (Logout with ID key is not allowed.)
Mode 2	Use non-contact type device (Logout with ID key is allowed.)

(b) Setting item (Management Setting)

- Mode 1
- Mode 2
- When selecting [Mode 2], select whether to use "User Authentication" concurrently.

NOTE

- **The setting is not available when either "External Server Authentication" of user authentication, "Password Only" of account track, "Do Not Synchronize" of user authentication and account track or "ON" of public user access has been set with [Administrator Settings] -> [User Authentication/Account Track] -> [General Settings].**

13.3.7 Management Function Choice - Vendor 2

(1) Use

- To set whether or not the vendor 2 is installed.

  NOTE

  - **When using the vendor along with the key counter, inserting the key counter will set it to the "Key Counter Mode" and removing it will set it to the "Vendor Mode".**

(2) Procedure

- Select message of key counter. (Only for key counter, the type of the message is same after mounting.)

(3) Confirmation copy

(a) Use

- Set whether to allow a confirmation copy when a key counter is installed.

(b) Default setting

- Ban

(c) Setting item

- License
- "Ban"

(4) The next job reservation

(a) Use

- Set whether to allow the reservation of the next job when a key counter is installed.

(b) Default setting

- Ban

(c) Setting item

- License
- "Ban"

(5) Count Setting

(a) Use

- To set the count timing used when the key counter is installed.

(b) Default setting

- Paper feed

(c) Setting item

- "Paper feed"
- Paper out

(6) Message

(a) Use

- Select message of vendor.

Type 1	Message for key counter
Type 2	Message for card scanning

Type 3	Message for ID management

(b) Setting item

- Type 1
- Type 2
- Type 3

13.3.8 Setting items that automatically change the setting values

NOTE

- **Performing the setup for each unit to be mounted will internally change the setting values below. It needs resetting when cancelling the setting in order to set back to "not mounted" because the setting value will remain.**

(1) When the vendor2 or authentication device 2 is mounted

Setting Item		Vendor 2	Authentication Device 2
Utility	Default Copy Settings	Factory Default	-
	Default Scan/Fax Settings	Factory Default	-
	Copy Operating Screen	[Yes]	-
	Fax Active Screen	Tx/Rx Display [Yes]	-
	Scan/Fax Settings -> Default Tab	Direct Input	-
Administrator Settings	Usage Settings for Each Function	Copy, PC print, and Send Data will be set to "ON". Others Prints will be set to "OFF".	
	Network Function Usage Settings	OFF	-
	Administrator Security Levels	Prohibit	-
	Weekly Timer ON/OFF Settings	OFF	-
	Restrict Access to Job Settings	Changing Job Priority, Delete Other User Jobs, Registering and Changing Addresses, Changing Zoom Ratio will be set to "Restrict".	-
	External Memory Function Settings	External Memory Document Scan will be set to "OFF".	-
	Job Priority Operation Settings	Skip Job (Fax) and Skip job (Copy, Print) will be set to "Yes".	-
	ID & Print Settings	-	ID & Print will be set to "ON".
	Forward TX Setting	No	-
	Memory RX Setting	Password for Memory RX Setting is set to the default value of the administrator password	-
	PC-Fax RX Setting	Restrict	-
	TSI User Box Setting	No	-
	OpenAPI Settings	Access Setting will be set to "Restrict" and Authentication will be changed to "OFF" setting.	-
	DPWS Settings -> Printer Settings/ Scanner Settings	Printer Settings and Scanner settings will be set to "OFF".	-
	Image Log Transfer Settings	[OFF]	-
Service Mode	Software Switch Setting	SW No. 63 will be set to [00000000] at Bit assignment/[00] at HEX assignment.	-
	Management function choice	Confirmation copy will be set to "Ban".	-
	FAX	[System] -> [Display Setting] -> [Re-Transmission] will be set to "OFF".	-

(2) When the key counter IF vendor or management device 2 is mounted

Setting Item		Key counter IF Vendor	Management Device 2
Utility	Default Copy Settings	Factory Default	-
	Default Scan/Fax Settings	Factory Default	-
	Copy Operating Screen	[Yes]	-
	Fax Active Screen	Tx/Rx Display [Yes]	-
	Scan/Fax Settings Default Tab	Direct Input	-
Administrator Settings	Usage Settings for Each Function	• Copy, PC print will be set to "ON". • Send Data, Others Prints will be set to "OFF".	Copy, PC print, Send Data, and Others Prints will be set to "ON".
	Network Function Usage Settings	OFF	
	Administrator Security Levels	Prohibit	-

Setting Item		Key counter IF Vendor	Management Device 2
	Weekly Timer ON/OFF Settings	OFF	-
	Restrict Access to Job Settings	Changing Job Priority, Delete Other User Jobs, Registering and Changing Addresses, Changing Zoom Ratio will be set to “Restrict”.	-
	External Memory Function Settings	External Memory Document Scan will be set to “OFF”. Save Document and Print Document will be set to "OFF".	-
	Forward TX Setting	No	-
	Memory RX Setting	Password for Memory RX Setting is set to the default value of the administrator password	-
	PC-Fax RX Setting	Restrict	-
	TSI User Box Setting	No	-
	OpenAPI Settings	Access Setting will be set to “Restrict” and Authentication will be changed to “OFF” setting.	-
	Apply Stamps/Stamp	No	-
	Apply Stamps/Copy Protect	No	-
	Apply Stamps/Stamp Repeat	No	-
	Apply Stamps/Registered Overlay	No	-
	Apply Stamps/Header/Footer	No	-
	DPWS Settings -> Printer Settings/ Scanner Settings	Printer Settings and Scanner Settings will be set to “OFF”.	
	Image Log Transfer Settings	[OFF]	-
Service Mode	Software Switch Setting	SW No. 63 will be set to [00000000] at Bit assignment/[00] at HEX assignment.	-
	Management function choice	Confirmation copy will be set to “Ban”.	-
	FAX	[System] -> [Display Setting] -> [Re-Transmission] will be set to “OFF”.	-

13.3.9 Coverage Rate Clear

(1) Use

- To clear the coverage rate.

(2) Procedure

- Selecting [Set] and touching [END] key will clear the coverage rate.

(3) Default setting

- Unset

(4) Setting item

- Set
- “Unset”

13.3.10 License management - Activation

(1) Functions

- To activate i-Option functions.

(2) Use

- To activate i-Option functions with CE.
- The functions can be activated by selecting the desired function and enter the appropriate license code and function code.
- Administrators also can carry out the procedure No.14 or later step to activate i-Option functions through Administrator Settings.

(3) Procedure

NOTE

- **You need to access License Management System (LMS) to implement each function setting.**
- **Before accessing the LMS, CE are required to register the E-mail address and the password in the LMS. To register, click [CE Initial Registration] that is located in the upper right of CE Login screen.**

1. Prepare “token certification.”
2. Access the following URL using the PC connected to the Internet.
   https://lms.konicaminolta.com/license/KM/support.aspx
3. Click [CE Login].

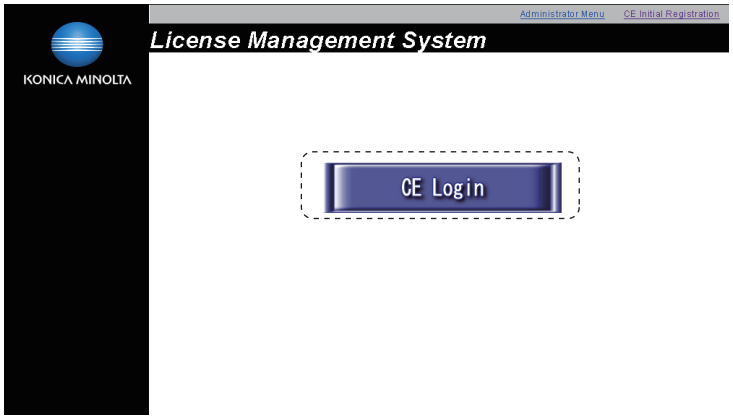

4. Enter [E-Mail Address] and [Password], and click [Login].

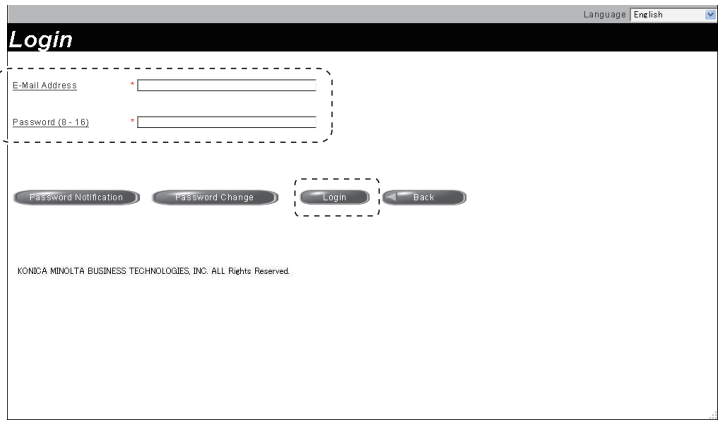

5. Click [Generate License Code].

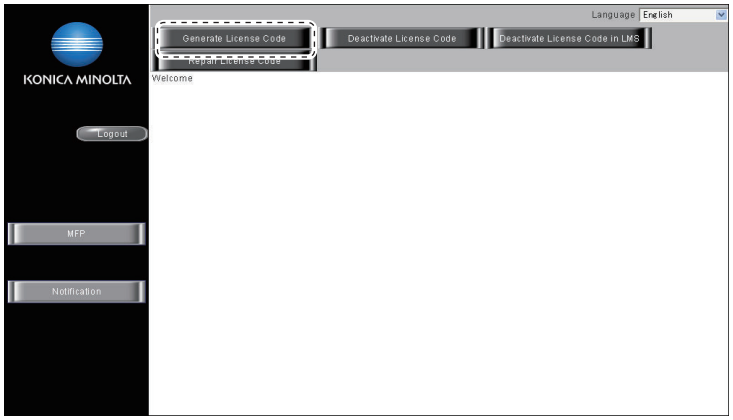

6. Enter the serial number of the target MFP, and click [Next].
NOTE
- **Make sure to enter alphabet letters of the serial number in all capital letters.**

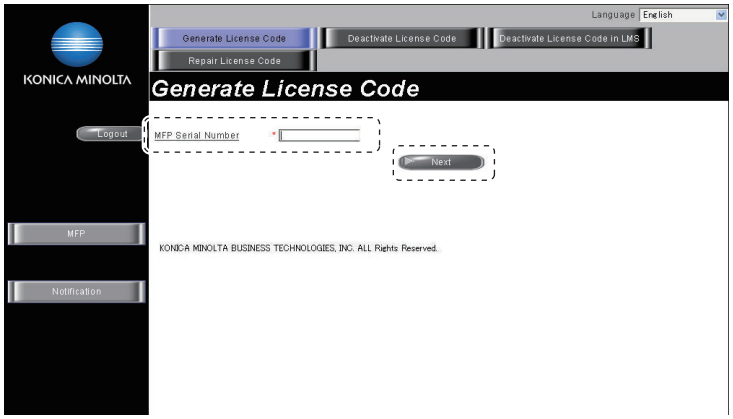

7. Click [Next].

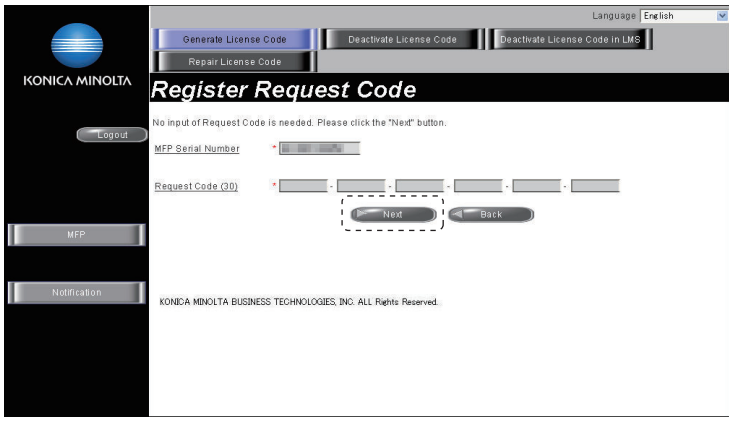

8. Enter the token number written in the token certification, and select the product description.
9. Click [Add].

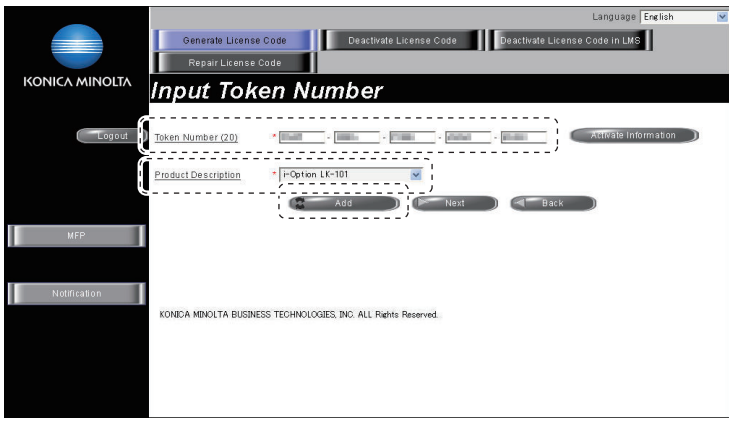

10. Confirm the registered items, and click [Next].

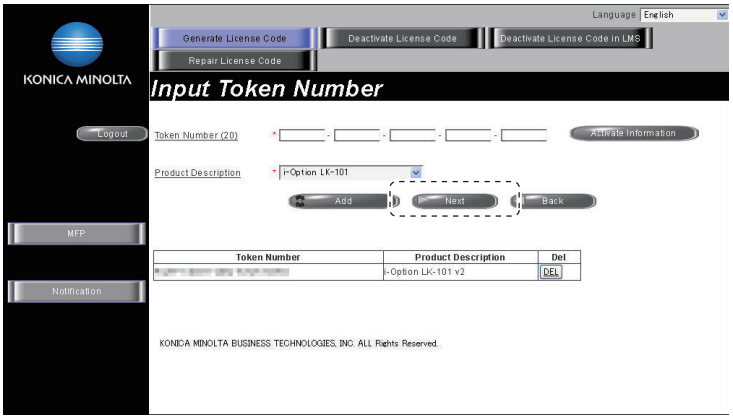

11. Click [Generate license Code].

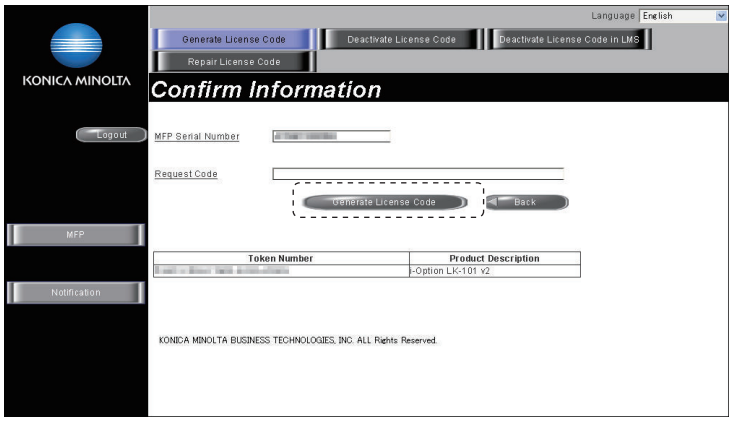

12. LMS issues license code and function code.
13. Write down the serial number, license code and function code.
<When activating with an USB memory>
Click [Download], and save a "***.fek" file to the root directory of the USB memory.

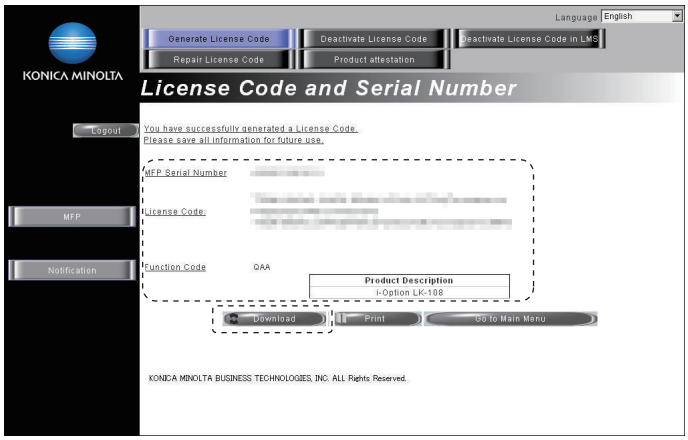

14. Select [Service Mode] -> [Billing Setting] -> [License Management].

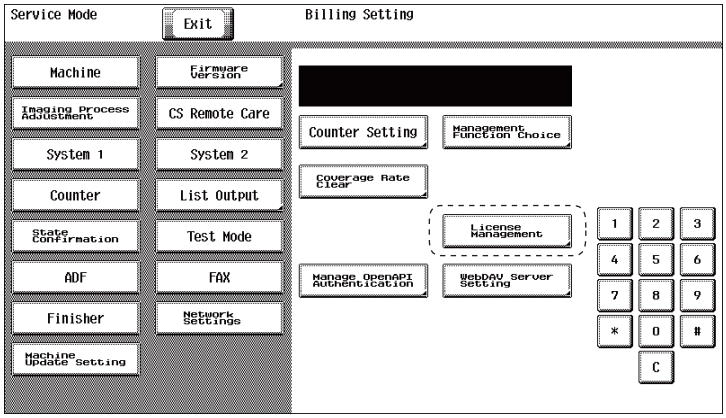

15. Select [Activation] -> [Function Code] or [License Code], and enter the function code and the license code confirmed at Step13.
<When activating with an USB memory>
Connect the USB memory to the USB port on the side of the control panel, and select [Activation] -> [USB].
16. Touch [Apply].

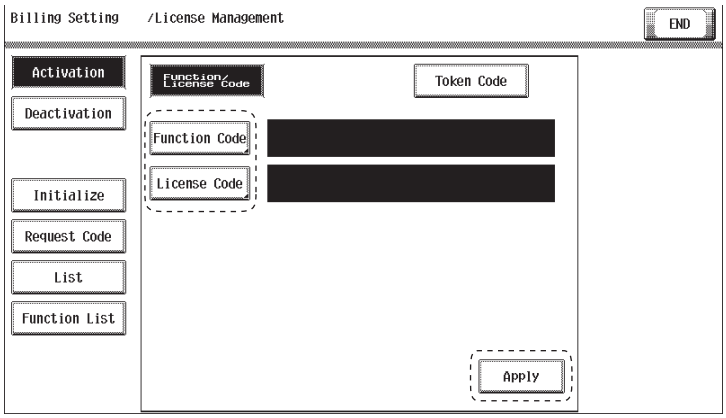

17. Follow the massage appearing on the screen and turn OFF and ON the main power switch.
<When activating with an USB memory>
This step is unnecessary. Proceed to the next step.
18. Select [Service Mode] -> [Billing Setting] -> [License Management] -> [Function List], and confirm that the activated function is displayed at the list.

13.3.11 License management - Deactivation

(1) Functions

- To deactivate i-Option functions.

(2) Use

- To deactivate i-Option functions due to registration error, expiration of lease term, change to other MFP or etc.
- The functions can be deactivated by selecting the desired function and enter the appropriate deactivation code.

(3) Procedure

NOTE

- **You need to access License Management System (LMS) to implement each function setting.**
- **Before accessing the LMS, CE are required to register the E-mail address and the password in the LMS. To register, click [CE Initial Registration] that is located in the upper right of CE Login screen.**

1. Check the serial number of the target MFP.
2. Access the following URL using the PC connected to the Internet.
https://lms.konicaminolta.com/license/KM/support.aspx
3. Click [CE Login].

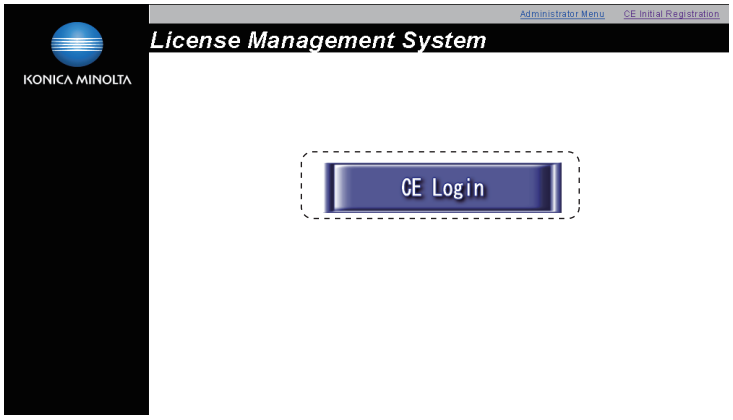

4. Enter [E-Mail Address] and [Password], and click [Login].

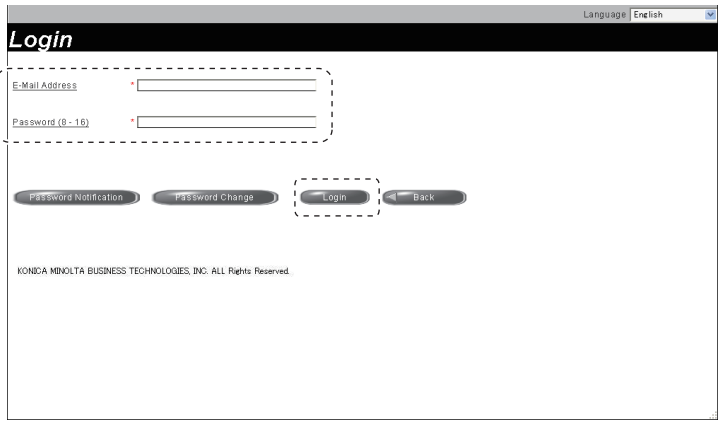

5. Click [Deactivate License Code].

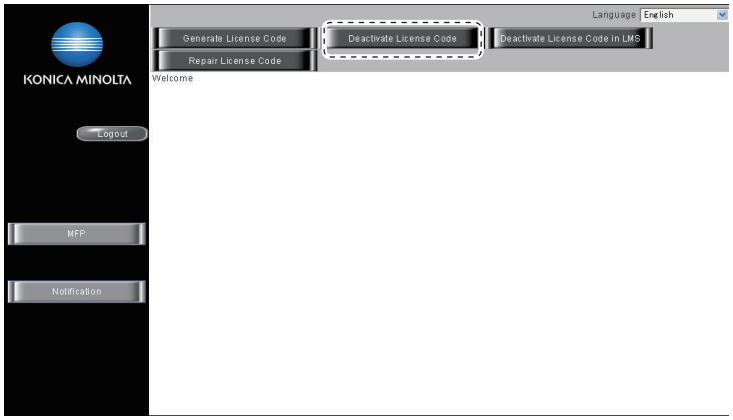

6. Enter the serial number of the target MFP, and click [Retrieve].
NOTE
- **Make sure to enter alphabet letters of the serial number in all capital letters.**

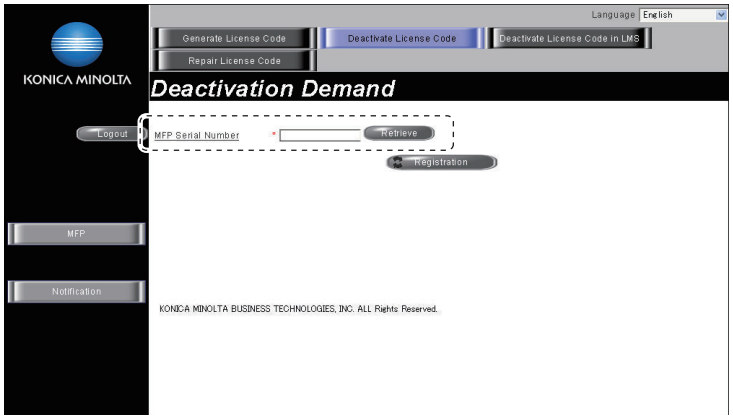

7. Select the token to be deactivated, and click [Registration].

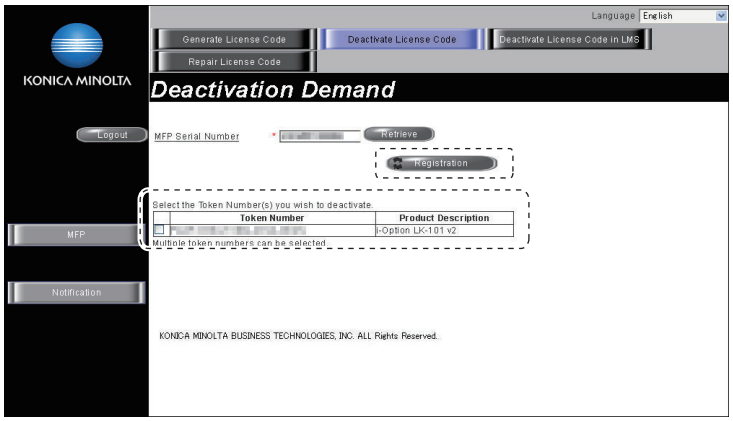

8. LMS issues deactivation code and function code.
9. Write down the serial number, deactivation code and function code.
   <When deactivating with an USB memory>
   Click [Download], and save a "***.fek" file to the root directory of the USB memory.

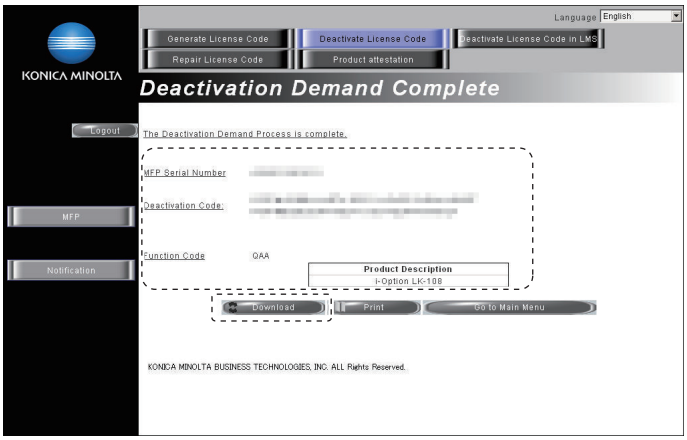

10. Select [Service Mode] -> [Billing Setting] -> [License Management].

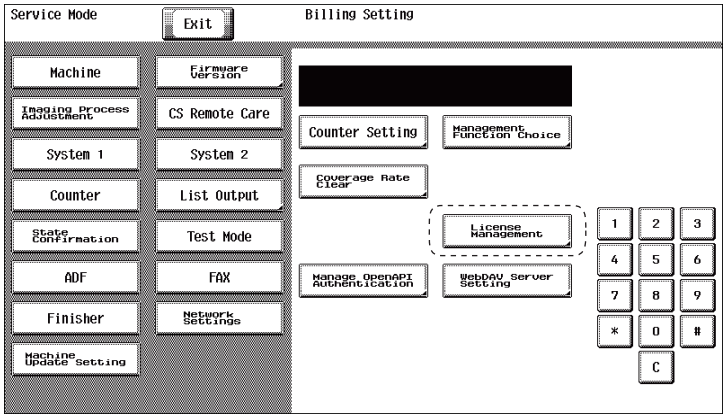

11. Select [Deactivation] -> [Function Code] or [Deactivation Code], and enter the function code and the deactivation code confirmed at Step9.
<When deactivating with an USB memory>
Connect the USB memory to the USB port on the side of the control panel, and select [Deactivation] -> [USB].
12. Touch [Apply].

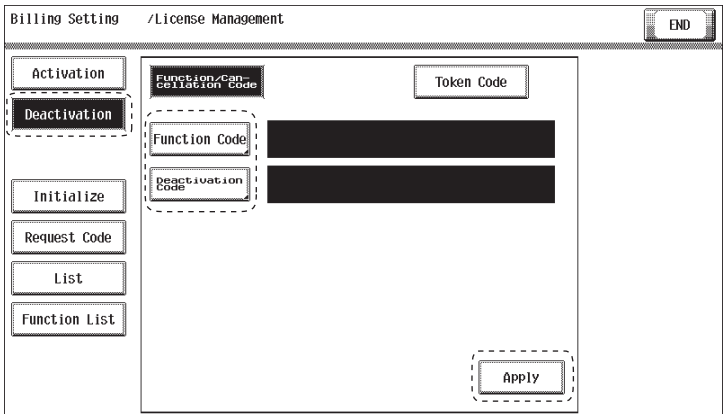

13. Write down or print out the serial number and deactivation complete code.
<When deactivating with an USB memory>
MFP will restart automatically. After MFP restarts, write down or print out the serial number and deactivation complete code.
NOTE
- **When A4S or 8 1/2 x 11S is set to the paper feed tray, the above-mentioned serial number and deactivation complete code can be printed out by pressing the start key.**
- **Serial number and deactivation complete code can be confirmed in [List] available from [License Management].**

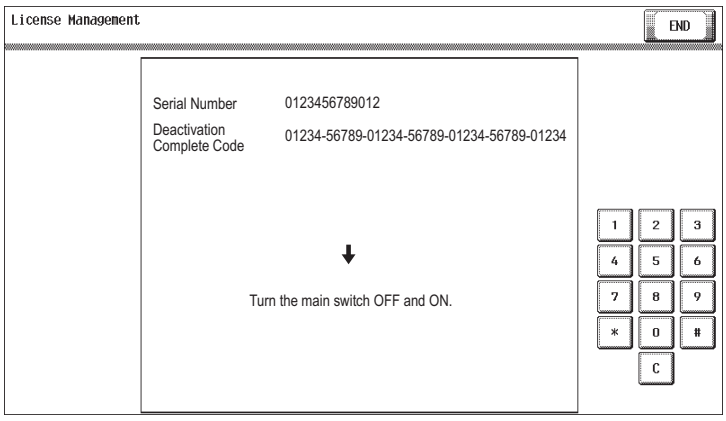

14. Follow the message appearing on the screen and turn OFF and ON the main power switch.
<When deactivating with an USB memory>
This step is unnecessary. Proceed to the next step.
15. Access to the LMS and login again.
For detail of the login method, refer to step 2 to step4.
16. Click [Deactivate License Code in LMS].
17. Enter the serial number and the deactivation complete code confirmed at step13.
NOTE
- **Make sure to enter alphabet letters of the serial number in all capital letters.**

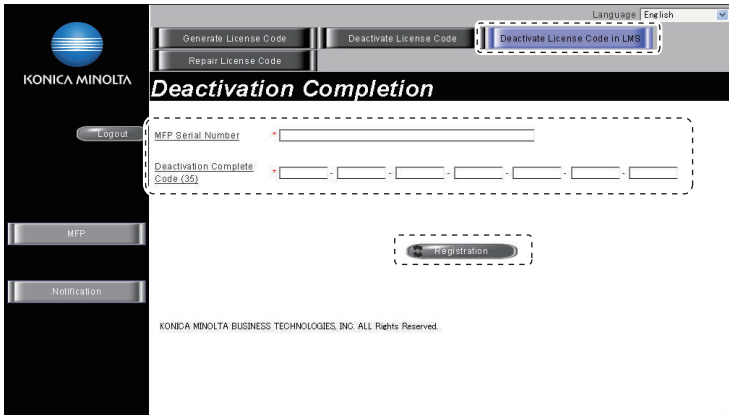

18. "Deactivation Complete" message will be displayed.
The license become invalid at both MFP and LMS, and deactivated token number can be used for another MFP.

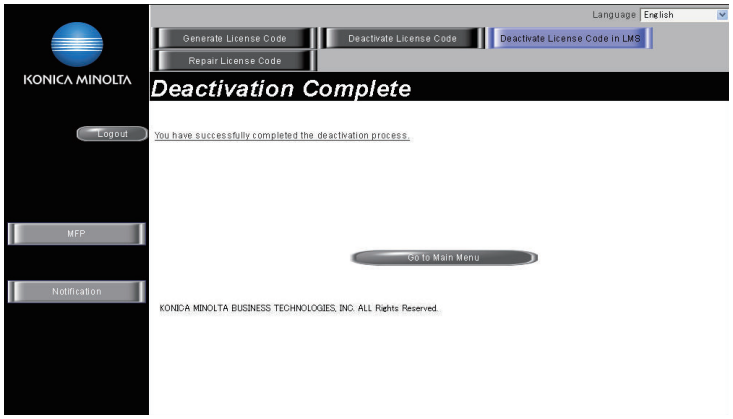

13.3.12 License management - Repair

(1) Functions

- To repair license management information.

(2) Use

- To be used when license management information is lost due to replacement of MFP board or any other trouble.
- License management information can be repaired by acquiring repair code with repair request code, and entering the repair code.

(3) Procedure

NOTE

- **You need to access License Management System (LMS) to implement each function setting.**
- **Before accessing the LMS, CE are required to register the E-mail address and the password in the LMS. To register, click [CE Initial Registration] that is located in the upper right of CE Login screen.**
- When the message "License management error occurred." is displayed, carry out the repair operation with the following steps.

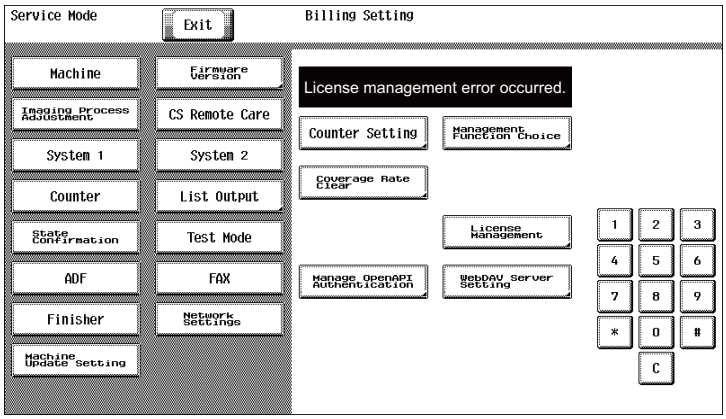

1. Select [Service Mode] -> [Billing Setting] -> [License Management].

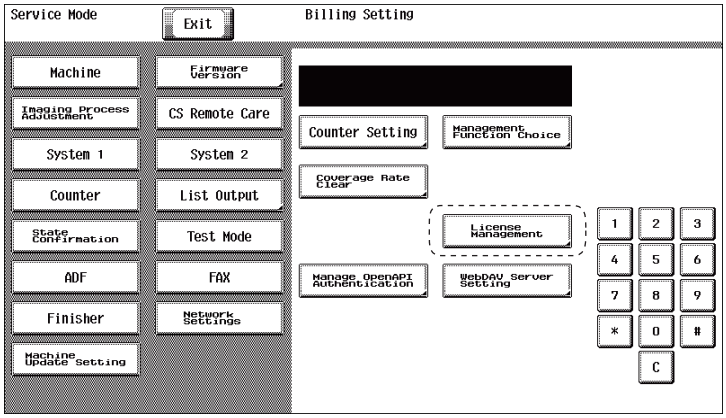

2. Select [Repair] -> [Repair Request Code].

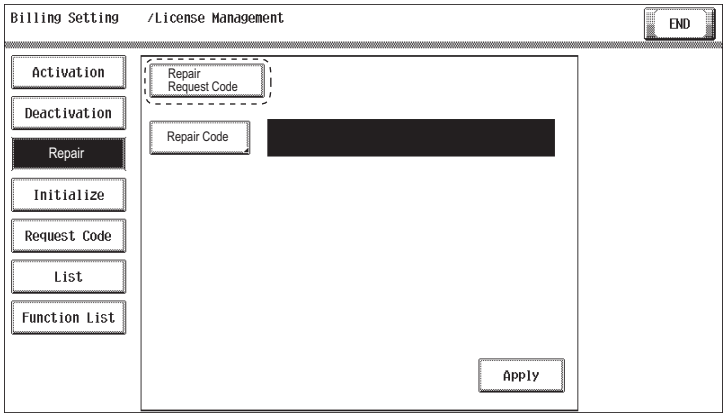

3. Write down or print out the serial number, repair request code and request code.
NOTE
- **When A4S or 8 1/2 x 11S is set to the paper feed tray, the above-mentioned serial number and repair request code can be printed out by pressing the start key.**

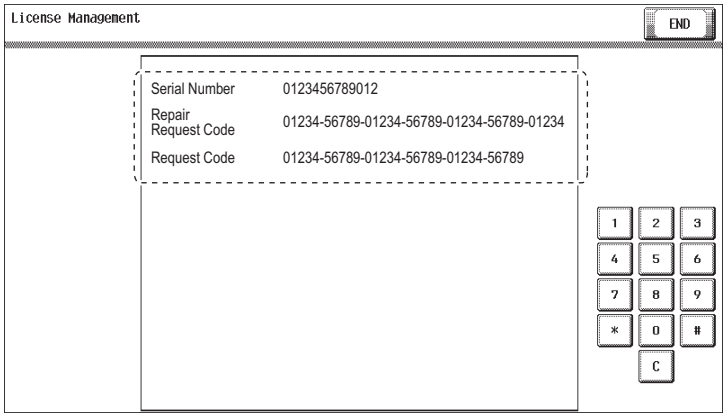

4. Access the following URL using the PC connected to the Internet.
https://lms.konicaminolta.com/license/KM/support.aspx
5. Click [CE Login].

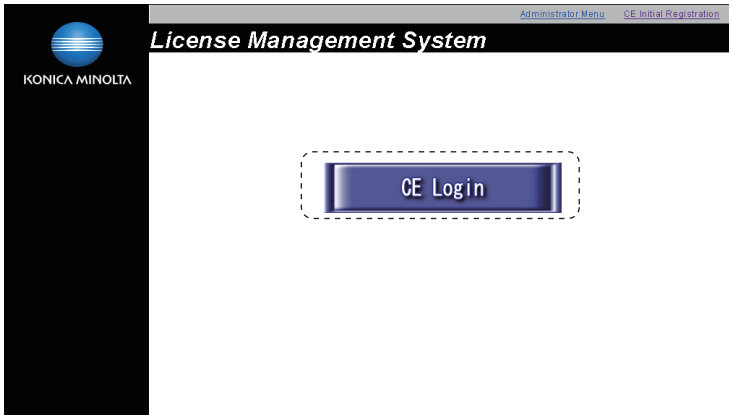

6. Enter [E-Mail Address] and [Password], and click [Login].

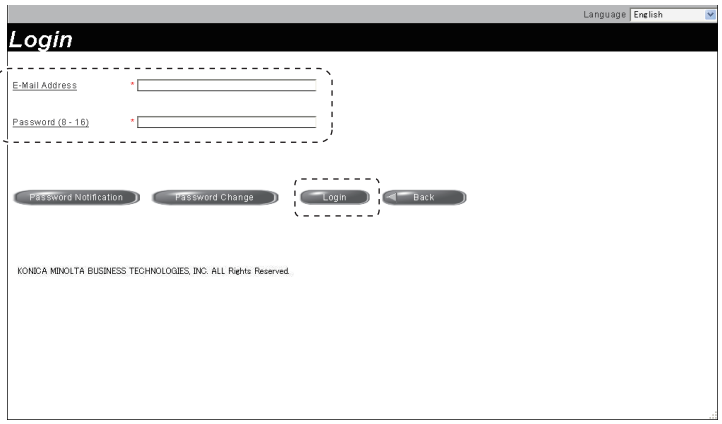

7. Click [Repair License Code].
8. Enter the serial number, repair request code and request code confirmed at step3, and click [Registration].
   NOTE
   - **Make sure to enter alphabet letters of the serial number in all capital letters.**

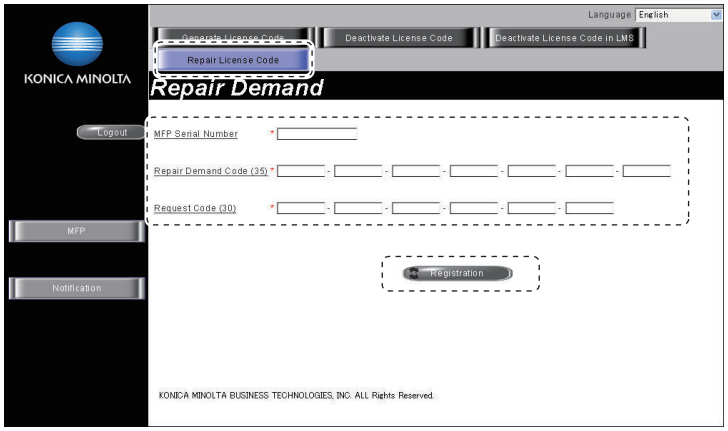

9. LMS issues repair permission code.
10. Write down the serial number and repair permission code.

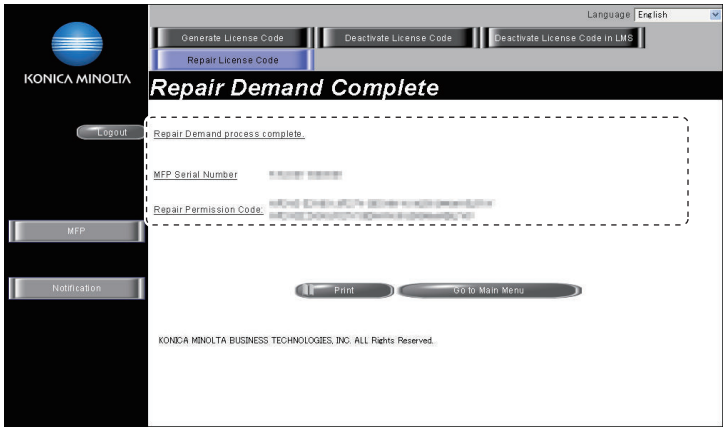

11. Select [Service Mode] -> [Billing Setting] -> [License Management].

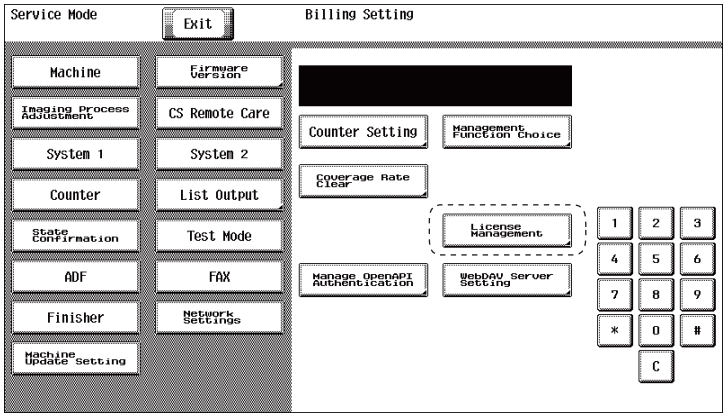

12. Select [Repair] -> [Repair Code], and enter the repair code confirmed at step10.

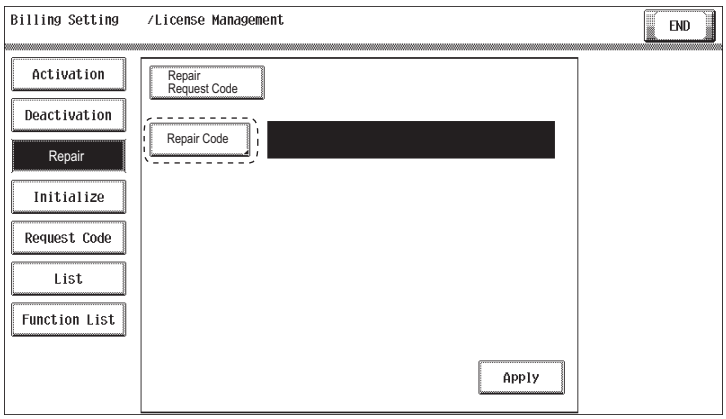

13. Touch [Apply].

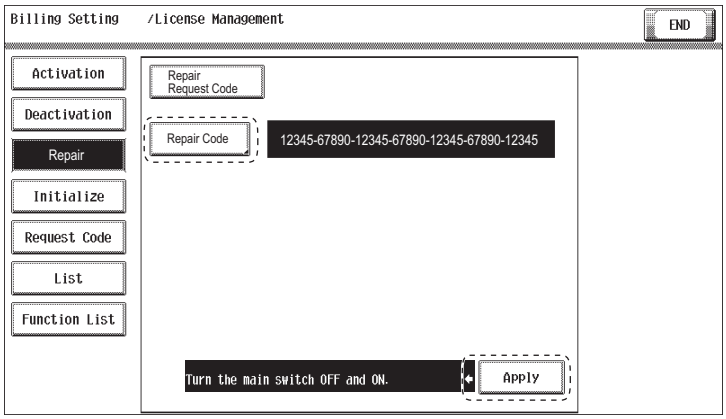

14. Follow the massage appearing on the screen and turn OFF and ON the main power switch.

13.3.13 License management - Initialize

(1) Functions

- To initialize license management information.

(2) Use

- To be used when license management information cannot be repaired.
- License management information should be initialized when the machine fails to generate request code or repair request code due to any trouble and the information cannot be repaired.

(3) Procedure

NOTE

- **You need to access License Management System (LMS) to implement each function setting.**
- When license management information cannot be repaired, initialize the information with the following procedure.

1. Contact the license management section of sales company to report the information necessary to issue the initialize code.
2. The license management section of sales company supplies the initialize code.
3. Call the Billing Setting to the screen.
4. Touch [License Management] -> [Initialize].
5. Enter the initialize code issued by call center using the keyboard on the screen, and touch [Apply].

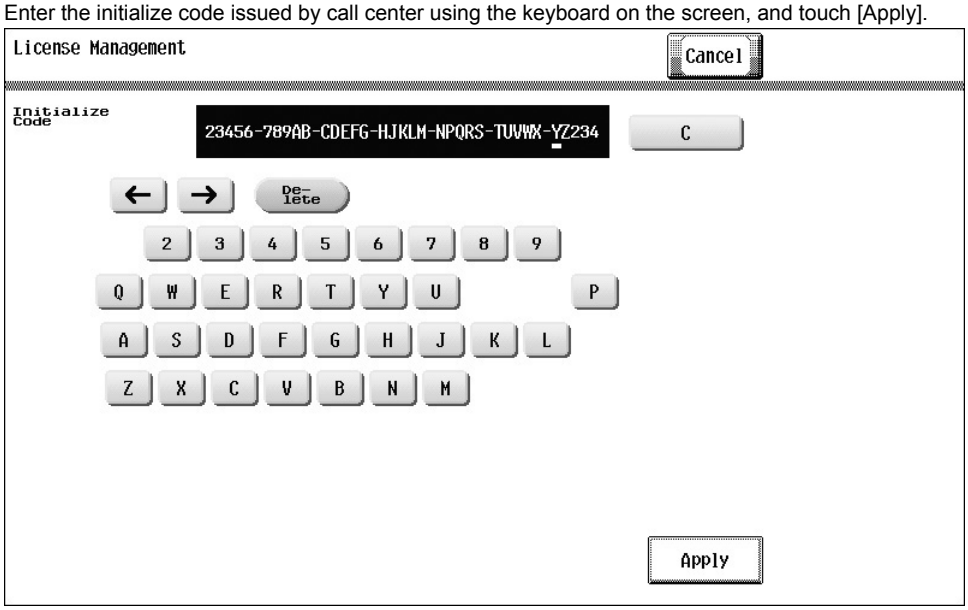

6. After completing the initialization, follow the message appearing on the screen and turn OFF and ON the main power switch.

13.3.14 License management - Request Code

- When the license management error is occurred, it will not be displayed until the repair code is input.

(1) Functions

- To display and print request code and serial number.

(2) Use

- To check the request code and serial number.

(3) Procedure

- Set A4S or 8 $^{1}/_{2}$ x 11S paper to the tray, and press start key at request code screen to print.

13.3.15 License management - List

(1) Functions

- To display and print deactivation complete code and serial number.

(2) Use

- To display and print deactivation complete code and serial number.

(3) Procedure

- Set A4S or 8 $^{1}/_{2}$ x 11S paper to the tray, and press start key at deactivation complete code screen to print.

13.3.16 License management - Function List

(1) Functions/Use

- To display activated functions.

13.3.17 Manage OpenAPI Authentication

(1) Restriction Code

(a) Use

- These are communication settings for the application which is developed by the third vendor. Do not set or change these settings without vendor's instructions.

(2) Region Code

(a) Use

- These are communication settings for the application which is developed by the third vendor. Do not set or change these settings without vendor's instructions.

13.3.18 WebDAV Server Setting

(1) Select Address

(a) Use

- To select the address of the LMS server used to manage the license of i-Option.
- Used to change the LMS server address set at the time of shipment.

Fixed Address	Uses the LMS server address set at the time of shipment. The specified address cannot be changed.
Specify Address	Specifies a desired LMS server address. When selecting [Specify Address], [Server Setting] is displayed.

(b) Default setting

- Fixed Address

(c) Setting item

- "Fixed Address"
- Specify Address

(2) Server Setting

(a) Use

- To configure the settings on the WebDAV server that communicates with MFP when selecting [Specify Address] in [Select Address].

(b) Procedure

<Host Name>
- Set the host name of the WebDAV server. (Up to 253 one-byte alphameric characters and symbols)

<File Path>
- Set the file path used in the WebDAV server communication. (Up to 47 one-byte alphameric characters and symbols)

<User name>
- Set the user name used to access the WebDAV server. (Up to 64 one-byte alphameric characters and symbols)

<Password>
- Set the password used to access the WebDAV server. (Up to 64 one-byte alphameric characters and symbols)

<Port Number>
- Set the port number used to access the WebDAV server. (Default: 80)

(3) Polling

(a) Use

- To set the number of times and interval at which MFP polls the WebDAV server.

(b) Procedure

<Polling Count>
- Set the number of times that MFP polls the WebDAV server. (Default: 30 times.)

<Polling Interval>
- Set the interval at which MFP polls the WebDAV server. (Default: 20 seconds.)

NOTE
- **When MFP accesses to WebDAV server via proxy server, set the proxy setting in [Administrator Settings] -> [Network Settings] -> [WebDAV Settings] -> [Proxy Setting for Remote Access].**

14. DEBUG SETTINGS

Debug Settings

- To configure the settings on log information acquisition performed to analyze the MFP controller's internal operation.

14.1 List of debug settings

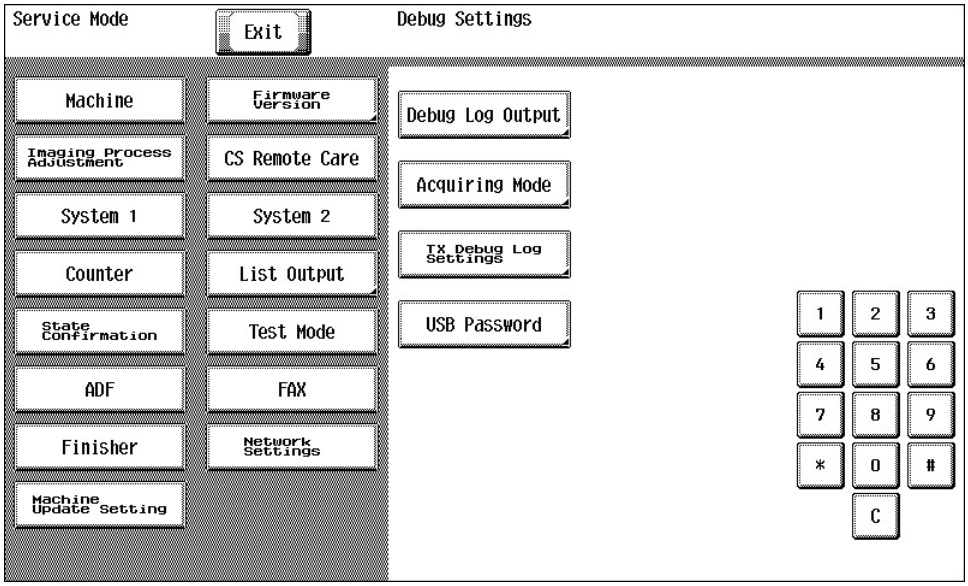

Debug Settings	Ref. Page
Debug Log Output	I.14.3.1 Debug Log Output
Acquiring Mode	I.14.3.2 Acquiring Mode
TX Debug Log Settings	I.14.3.3 TX Debug Log Settings
USB Password	I.14.3.4 USB Password

14.2 Starting/Exiting

14.2.1 Starting procedure

NOTE

- **Before the procedure, set the switch No. 155 to [00000001] at Bit assignment/[01] at HEX assignment in [Service Mode] -> [System 2] -> [Software Switch Setting].**

1. Call the Service Mode to the screen.
2. Press the following keys in this order.
   - Stop -> 6 -> 1 -> 8
3. Select a mode.

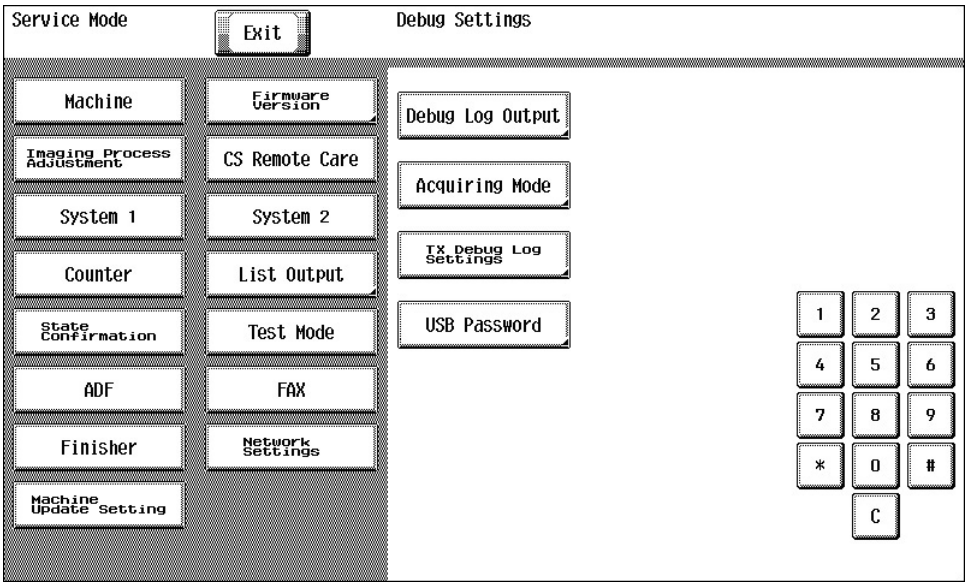

14.2.2 Exiting procedure

1. Touch [Exit] on the Service Mode screen.
2. Turn OFF the main power switch. Wait 10 seconds, then turn ON the main power switch again.

14.3 Debug Settings

14.3.1 Debug Log Output

(1) Use

- To select debug log data to be output and save it in a USB memory.

All	Outputs available all logs.
Select File	Specifies a desired file and outputs it Capable of narrowing file types from [Normal], [Trouble], or [Print Data].
Select Time	Specifies a desired period and outputs corresponding data.
Shared Memory -> HDD	• Manually stores debug information written in the memory into the HDD. • After selecting [Save], saving is started by pressing the Start key.
HDD -> USB Memory	• Outputs debug information stored in the HDD into a USB flash drive. • After selecting [Output], saving is started by pressing the Start key.

Logs obtained under normal operation and logs obtained upon occurrence of trouble are separated and stored in different areas. Up to 20 logs can be stored.

- Logs obtained under normal operation (including JAM): 10 logs
- Logs obtained upon occurrence of trouble: 10 logs

When the number of saved logs reaches the upper limit, files are overwritten starting from the oldest file.

(2) Setting item

- “All”
- Select File
- Select Time
- Shared Memory -> HDD
- HDD -> USB Memory

NOTE

- **If a USB memory is not connected to the USB port of MFP or [Administrator Settings] -> [Security Settings] -> [Security Details] -> [Export Debug Log] is set to [Restrict], output is unavailable.**

14.3.2 Acquiring Mode

(1) Use

- To select mode used to acquire debug logs.
- If the cause of a problem cannot be identified by the debug logs acquired in basic mode, obtain more detailed debug logs in Enhance mode and analyze them.

Basic	Normal mode Stores debug information saved in the memory into the HDD.
Enhance	Mode that enables you to obtain more detailed debug information than Basic mode. When a large amount of detailed information must be output, the CPU or other devices is heavily loaded and the performance of MFP is affected.

(2) Default setting

- Basic

(3) Setting item

- “Basic”
- Enhance

(4) Enhance mode

- When "Enhance" is selected, configure the following items.

(a) Network Packet

- If network packet information is necessary, select "ON."

(b) Acquisition function

- Select the functions to be covered when obtaining debug logs.
  Select All, Copy, Printer, Box, Net/Scan, PSWC, FAX, Net Fax, and Authentication
- This item will not be displayed when [Network Packet] is set to ”ON.”

(c) Network Packet Capture

- If [Network Packet] is set to "ON," configure [Capture Filter Settings] and [Capture Settings].
- This item will not be displayed when [Network Packet] is set to "OFF."

(d) By Job

- Set the number of jobs handled as a unit (the number of jobs by which debug information is acquired).

(e) Individual Command

- Register and execute individual debug commands.

(f) Command Set

- Install a command set and execute it.

(5) Timing of Saving Debug Information in Each Mode

(a) Basic mode

Debug information is stored in the HDD at the timings described below.

- When trouble occurs
- When there is no job
- During transition to energy save mode (sleep mode or low power mode)
- When authentication fails
- When [Debug Log Output] -> [Shared Memory -> HDD] is performed manually

(b) Enhance mode

- Save debug information to the USB memory or HDD as needed.

14.3.3 TX Debug Log Settings

- To configure settings used to send debug information via the network.
- To send the information via the network, SMB, FTP, or WebDAV transmission is selectable.
- This item will be displayed only when [Acquiring Mode] is set to “Basic.”

(1) Select TX Method

(a) Use

- To select a method used to send via the network.

(b) Default setting

- “OFF”

(c) Setting item

- “OFF”
- SMB
- FTP

(2) SMB Setting

(a) Use

- To configure settings used in SMB transmission.

(b) Procedure

<Host Name>

- Set the host name of the SMB server.

<File Path>

- Set the file path used in SMB server transmission.

<User Name>

- Set the user name used to access the SMB server.

<Password>

- Set the password used to access the SMB server.

(3) FTP Settings

(a) Use

- To configure settings used in FTP transmission.

(b) Procedure

<Host Name>

- Set the host name of the FTP server.

<File Path>

- Set the file path used in FTP server transmission.

<User Name>

- Set the user name used to access the FTP server.

<Password>

- Set the password used to access the FTP server.

<Port Number>

- Set the port number used to access the FTP server.

<PASV>

- Set PASV mode to ON or OFF.

<Proxy>

- Set whether or not to connect to a proxy server.

(4) WebDAV Setting

(a) Use

- To configure settings used in WebDAV transmission.

(b) Procedure

<Host Name>
- Set the host name of the WebDAV server.

<File Path>
- Set the file path used in WebDAV server transmission.

<User Name>
- Set the user name used to access the WebDAV server.

<Password>
- Set the password used to access the WebDAV server.

<Port Number>
- Set the port number used to access the WebDAV server.

<Proxy>
- Set whether or not to connect to a proxy server.

<SSL Settings>
- Select to use SSL communication.

14.3.4 USB Password

(1) Use

- To set a password used to store debug information into a USB flash drive.
- CE informs the KM contact person of this password and the debug information data separately.

NOTE
- **NEVER forget the USB password.**

(2) Default setting

- 01234567890123456789

(3) Procedure

- Enter an USB password from the keyboard on the screen.
  1. Current Password: Enter the USB password currently in use.
  2. New Password: Enter a new USB password.
  3. Re-input Password: Re-enter the new USB password.

14.4 Operation of the debug log function

14.4.1 Basic mode

(1) Intended purpose

- To retrieve the program sequence logs from the MFP; for analyzing field problems caused by MFP controller program malfunction which could be difficult to reproduce in KM.

NOTE
- **CE should get permission from CUSTOMER before retrieving the program sequence logs from the customer's MFP.**
- **A Key generate utility is required for creation of a key file.**
- **For how to obtain or how to use the Key generate utility, please conduct the KMI support department.**

(2) Outline

1. Save the key file in the USB memory by using the Key generate utility on the PC.
2. Set the Debug Settings to “ON” in the Service Mode.
3. Set the data encryption password through the customer administrator.
4. Try to reproduce the problem/malfunction on the MFP.
5. The problem/malfunction is reproduced.
6. Set the debug log acquisition to "Allow" in Administrator Settings.
7. Select the debug log(s) that corresponds to the problem. Select "USB Memory" as the output destination and acquire the log(s).
8. Send the log(s) and the USB password to the department of KM from which you receive instructions.

NOTE
- **Up to a total of 20 log files can be saved, including ten during normal operations and another ten when errors occur.**
- **When the number of log files saved exceeds the upper limit, the log files are overwritten in chronological order.**
- **Each log file is concerned with a single job.**
- **Priority is given to job processing. A log file may not therefore be saved if jobs are performed continuously or if power is turned OFF immediately after processing of a job has been completed.**

(3) Details of the procedure

(a) Advance preparation

- Save a key file into a USB memory.
  1. Set the USB Password on the Key generation utility.
  2. Generate the Key file by typing in the Serial number (capital letter) of the target MFP.
  3. Copy the created "Debug Log" folder into the root directory of the USB memory.
- Make sure that [Administrator Settings] -> [Security Settings] -> [Enhanced Security Mode] is set to OFF.

(b) Settings for acquiring logs

1. Get permission from the CUSTOMER to retrieve the program sequence logs from the MFP at the customer's site.
   NOTE
   - **Logs include the MFP control program sequences only. They do not include the copy/scan/print/fax image data.**
2. Set the switch No.155 to [00000001] at Bit assignment/[01] at HEX assignment in [Service Mode] -> [System 2] -> [Software Switch Setting].
3. Call the Debug Settings to the screen.
4. Select [Basic] in [Debug Settings] -> [Acquiring Mode].
5. Ask the administrator of the MFP to set a debug log encryption passphrase in [Administrator Settings] -> [Security Settings] -> [HDD Settings] -> [Debug Log Encryption Settings]. (Default: 01234567890123456789)
   NOTE
   - **This setting is used to encrypt debug logs to be stored in the HDD.**
   - **Be sure to set the encryption password. Failure to set the encryption password may hamper correct analysis of the log.**
6. Try to reproduce the problem/malfunction on MFP.
7. The problem/malfunction is reproduced.
8. Ask the administrator of the MFP to set [Administrator Settings] -> [Security Settings] -> [Security Details] -> [Export Debug Log] to [Allow].
9. Call the Debug Settings in Service Mode.
10. Set the USB password in [Debug Settings] -> [USB Password].
    NOTE
    - **The USB password set here must be same as the password set in the USB memory in advance preparation procedure.**
11. Call [Debug Settings] -> [Debug Log Output] to the screen.
12. Connect the USB memory prepared in advance preparation to the USB port located on the right-side of the control panel.
13. Touch [Select File]. Select the intended file and touch [Output] in [HDD -> USB Memory].
14. Check that the Start key lights up in blue, and press the Start key.
    NOTE
    - **If the Start key lights up orange, the USB password and/or MFP serial number on for the MFP do not match the key file.**
15. [OK] will be displayed.
16. Touch [OK], and exit the Debug Settings.
17. Return the switch No. 155 to [00000000] at Bit assignment/[00] at HEX assignment in [Service Mode] -> [System 2] -> [Software Switch Setting].
18. Exit the Service Mode.
19. Remove the USB memory from the MFP and check that the USB memory contains the file of which name is "LOGSYS_xxxxxxxxxx.log".
20. Send KM your request of analyzing the problem with the log file.
    NOTE
    - **Send the USB password and log file(s) to the recipient of your request SEPARATELY.**

14.4.2 Enhance mode

(1) Intended purpose

- To retrieve the program sequence logs from the MFP; for analyzing field problems caused by MFP controller program malfunction which could be difficult to reproduce in KM.

NOTE
- **CE should get permission from CUSTOMER before retrieving the program sequence logs from the customer's MFP.**
- **Please explain to the CUSTOMER that the MFP performance will be down during the procedure. The top priority of the MFP is to save the logs completely before starting the next job process; so the CUSTOMER will see a pause between jobs.**

(2) Outline

1. Save the key file in the USB memory by using the Key generate utility on the PC.
2. Set the Debug Settings to "ON" in the Service Mode.
3. Set the data encryption password through the customer administrator.
4. Select the target device (USB memory or HDD) to save the log files.
   - When selecting USB memory as target, ask the administrator of the MFP to set [Administrator Settings] -> [Security Settings] -> [Security Details] -> [Export Debug Log] to [Allow].
   - Connect the USB memory into the USB port on the right-rear side of the MFP.
5. Try to reproduce the problem/malfunction on the MFP.
6. The problem/malfunction is reproduced
7. Remove the USB memory if you select USB memory as a target device. (Go to step 9)
8. When selecting HDD as target, ask the administrator of the MFP to set [Administrator Settings] -> [Security Settings] -> [Security Details] -> [Export Debug Log] to [Allow].
   - Save a key file into a USB memory.
9. Send the log(s) and the USB password to the department of KM from which you receive instructions SEPARATELY.

(3) Details of the procedure

(a) Advance preparation

- Save a key file into a USB memory.
  1. Set the USB Password on the Key generation utility.
  2. Generate the Key file by typing in the Serial number (capital letter) of the target MFP.
  3. Copy the created "Debug Log" folder into the root directory of the USB memory.
- Make sure that [Administrator Settings] -> [Security Settings] -> [Enhanced Security Mode] is set to OFF.

(b) Settings for acquiring logs (When selecting USB memory as a target device)

1. Get permission from the CUSTOMER to retrieve the program sequence logs from the MFP at the customer's site.
   NOTE
   - **Logs include the MFP control program sequences only. They do not include the copy/scan/print/fax image data unless selecting printer.**
   - **Please explain to the CUSTOMER that the MFP performance will be down during the procedure. The top priority of the MFP is to save the logs completely before starting the next job process; so the CUSTOMER will see a pause between jobs.**
2. Set the switch number "155" to "01" in HEX Assignment in [Service Mode] -> [System 2] -> [Software Switch Setting].
3. Call the Debug Settings to the screen.
4. Select [Enhance] in [Debug Settings] -> [Acquiring Mode].
5. Select the target logs.
   NOTE
   - **DO NOT TOUCH the command settings (Individual Command and Command Set) without KM instructions.**
6. Set the USB password in [Debug Settings] -> [USB Password].
   NOTE
   - **The USB password set here must be same as the password set in the USB memory in advance preparation procedure.**
7. Exit the Service Mode.
8. Ask the administrator of the MFP to set [Administrator Settings] -> [Security Settings] -> [Security Details] -> [Export Debug Log] to [Allow].
9. Connect the USB memory into the USB port on the right-rear side of the MFP.
10. Try to reproduce the problem/malfunction on MFP.
    Cautions when saving log files each time the problem/malfunction is reproduced
    - **Saved Logs will not be overwritten. USB memory should have enough capacity to save the all logs.**
    - **Debug log function will stop if USB memory is FULL.**
    - **While saving the log data, a specific ICON will appear on the control panel. DO NOT REMOVE the USB memory when the ICON is displayed.**
11. The problem/malfunction is reproduced.
12. Return the switch number "155" in HEX Assignment to "00" in [Service Mode] -> [System 2] -> [Software Switch Setting].
13. Exit the Service Mode.
14. Remove the USB memory from the MFP and check that the USB memory contains the file of which name is "LOGSYS_xxxxxxxxxx.log".
15. Send KM your request of analyzing the problem with the log file.
    NOTE
    - **Send the USB password and log file(s) to the recipient of your request SEPARATELY.**

(c) Settings for acquiring logs (When selecting HDD as a target device)

1. Get permission from the CUSTOMER to retrieve the program sequence logs from the MFP at the customer's site.
   NOTE
   - **Logs include the MFP control program sequences only. They do not include the copy/scan/print/fax image data unless selecting printer.**
   - **Please explain to the CUSTOMER that the MFP performance will be down during the procedure. The top priority of the MFP is to save the logs completely before starting the next job process; so the CUSTOMER will see a pause between jobs.**
2. Set the switch number "155" to "01" in HEX Assignment in [Service Mode] -> [System 2] -> [Software Switch Setting].
3. Call the Debug Settings to the screen.
4. Select [Enhance] in [Debug Settings] -> [Acquiring Mode].
5. Select the target logs.
   NOTE
   - **DO NOT TOUCH the command settings (Individual Command and Command Set) without KM instructions.**
6. Set the USB password in [Debug Settings] -> [USB Password].
   NOTE
   - **The USB password set here must be same as the password set in the USB memory in advance preparation procedure.**
7. Exit the Service Mode.
8. Ask the administrator of the MFP to set a debug log encryption passphrase in [Administrator Settings] -> [Security Settings] -> [HDD Settings] -> [Debug Log Encryption Settings]. (Default: 01234567890123456789)
   NOTE
   - **This setting is used to encrypt debug logs to be stored in the HDD.**
   - **Be sure to set the encryption password. Failure to set the encryption password may hamper correct analysis of the log.**
9. Try to reproduce the problem/malfunction on MFP.
10. The problem/malfunction is reproduced.
11. Ask the administrator of the MFP to set [Administrator Settings] -> [Security Settings] -> [Security Details] -> [Export Debug Log] to [Allow].
12. Call [Debug Settings] -> [Debug Log Output] to the screen.
13. Connect the USB memory prepared in advance preparation to the USB port located on the right-side of the control panel.
14. Touch [Select File]. Select the intended file and touch [Output] in [HDD -> USB Memory].
15. Check that the Start key lights up in blue, and press the Start key.
    NOTE
    - **If the Start key lights up orange, the USB password and/or MFP serial number on for the MFP do not match the key file.**
16. [OK] will be displayed.

17. Touch [OK], and exit the Debug Settings.
18. Return the switch number "155" in HEX Assignment to "00" in [Service Mode] -> [System 2] -> [Software Switch Setting].
19. Exit the Service Mode.
20. Remove the USB memory from the MFP and check that the USB memory contains the file of which name is "LOGSYS_xxxxxxxxxxx.log".
21. Send KM your request of analyzing the problem with the log file.
    NOTE
    - **Send the USB password and log file(s) to the recipient of your request SEPARATELY.**

15. CONTENTS TO BE CLEARED BY RESET FUNCTION

Function for clearing / Contents to be cleared		Front door open/ close	Main power switch OFF/ ON	Trouble reset	Initialize							
							Clear All Data					
					System Error Clear	Clear All Data	Job Memory Setting Data	Address Registration Data	Fax Setting Data	All History Data	Network Setting Data	Server Cache Data
Jam display		○	-	-	○	○	-	-	-	-	-	-
Malfunction display	Rank A	-	-	○	○	○	-	-	-	-	-	-
	Rank B	○	-	○	○	○	-	-	-	-	-	-
	Rank C	-	○	○	○	○	-	-	-	-	-	-
Erratic operation / display		-	○	-	○	○	-	-	-	-	-	-
Utility Mode (Except items on engine adjustment)		-	-	-	-	○	-	-	-	-	-	-
Job memory setting data		-	-	-	-	○	○	-	-	-	-	-
Address registration data		-	-	-	-	○	-	○	-	-	-	-
Fax setting data (Excluding destination related data)		-	-	-	-	○	-	-	○	-	-	-
History data (Job history, Journal history, Receive reject history, Destination history, Job secure counter)		-	-	-	-	○	-	-	-	○	-	-
Network setting data (Excluding destination related data)		-	-	-	-	○	-	-	-	-	○	-
Cache data of external authentication server		-	-	-	-	○	-	-	-	-	-	○
Service Mode (System 1/2)		-	-	-	-	□*1	-	-	-	-	-	-
Billing Setting	Management Function Choice	-	-	-	-	○	-	-	-	-	-	-
Adjustment of the touch panel position		-	-	-	-	○	-	-	-	-	-	-
Trouble auto release retry count		-	-	--	○	○	-	-	-	-	-	-

○: Will be cleared (initialized)
- : Will not be cleared

□*1: Items to be cleared	
System 1	Marketing Area (Fax Target only)
System 2	HDD
	Image Controller Setting

16. MECHANICAL ADJUSTMENT bizhub 364e/284e/224e

16.1 Scanner section

16.1.1 Adjustment of the scanner motor belt

(1) Purpose

This adjustment must be made in the following case:
- The scanner motor assy has been removed.

(2) Procedure

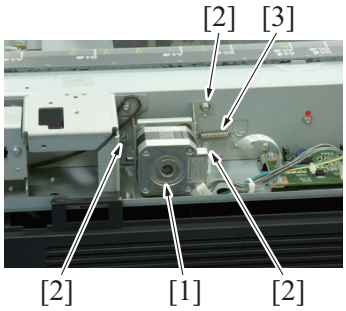

1. Attach the spring [3] to the scanner motor assy [1].
2. Temporarily secure the scanner motor assy [1] with three screws [2].
   NOTE
   - **The screws [2] should be temporarily tightened to a degree that the position of the motor can be adjusted by the spring force**
   - **When installing the scanner motor, make sure that the scanner motor is disconnected with the connector.**

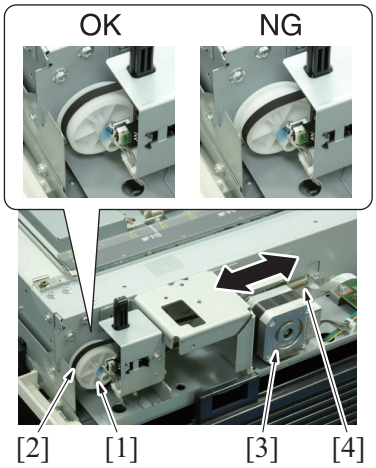

3. Attach the drive belt [2] to the pulley [1] and the gear of scanner motor.
4. Move the scanner motor assy [3] in the direction shown in the illustration for two to three times, then make sure that it runs smoothly.
   NOTE
   - **Make sure that the drive belt [2] is properly kept tight by the spring [4] force.**
   - **If the deflection or tension of the drive belt [2] is excessive, the scanner unit does not work correctly. This may result in trouble.**
   - **Make sure that the drive belt [2] is attached to the pulley [1] correctly.**

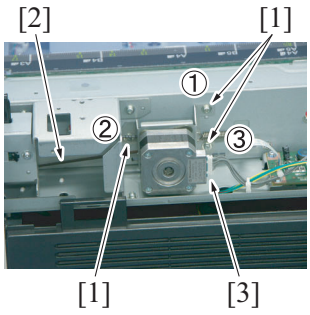

5. Tighten three screws [1] in the order shown in the illustration to fix the scanner motor Assy.
6. Connect the connector [3] to the scanner motor.
   NOTE
   - **When tightening the screw [1], make sure that the scanner motor assy is not touched.**
   - **After securing the scanner motor assy, check again that the deflection and tension of the drive belt [2] are not excessive.**

16.2 Paper feed section

16.2.1 Centering adjustment of the tray 1/2

(1) Purpose

This adjustment must be made in the following case:
- When an image printed on a copy is displaced from the correct position with the use of the tray1/2.

(2) Procedure

1. Make a test print and check the amount of misalignment.
2. Pull out the tray where this adjustment is made.

3. Stretch the paper guides [1] to the maximum size position.

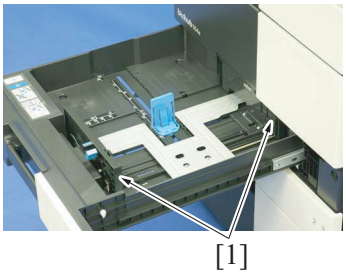

4. Loosen two screws [1].

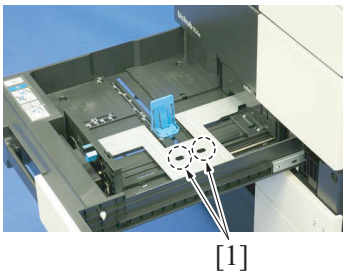

5. Move the paper guides [1] complete according to the amount of the mis-centering you checked in step 1 and adjust the center position of it.
6. Tighten two screws [2].

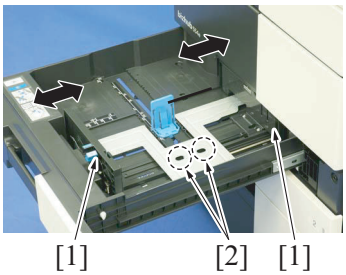

7. Make another test print and check the amount of misalignment.

16.2.2 Pick-up pressure adjustment of the tray 1/2

(1) Purpose

This adjustment must be made in the following case:

- When paper jam occurs while thin paper (52 g/m^2) is fed.

(2) Procedure

1. Remove the paper feed unit.
   G.5.3.2 Paper feed unit

2. Remove the spring [1] stored for replacement from the paper feed unit.

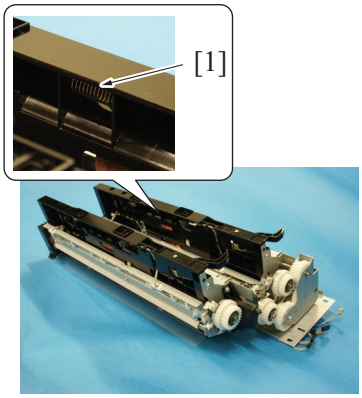

3. Remove the C-clip [1], and remove the tray 2 pick-up roller [2].

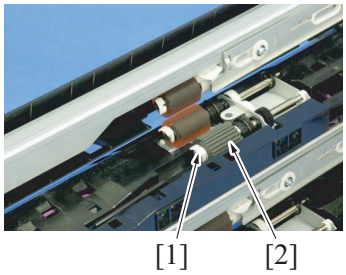

4. Remove the bearing [1].

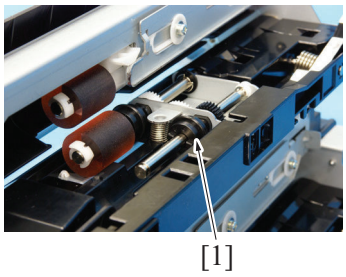

5. Remove two E-rings [1], and remove the shaft [2] of the pick-up roller.

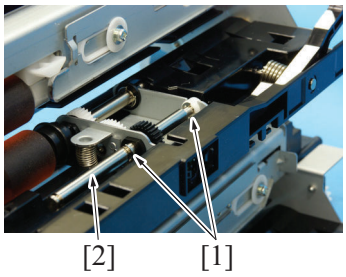

6. Remove the spring [1] and replace it with the replacement spring prepared in step 2.
NOTE
- **The pick-up pressure of the tray 1 can be adjusted by replacing the spring of the tray 1 paper feed unit with the replacement spring prepared in step 2.**

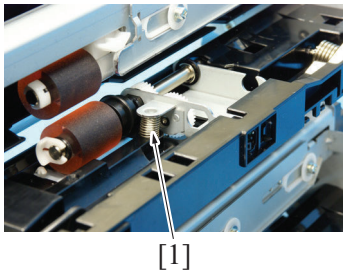

7. To reinstall, reverse the order of removal.
8. Make a test print to check whether paper is fed properly.

16.2.3 Separator roller pressure adjustment of the bypass tray

(1) Purpose

This adjustment must be made in the following case:

- When paper jam occurs with a specific type of thick paper (300 g/m^2) is fed.

(2) Procedure

1. Open the right door.

2. Remove the screw [1], and remove the cover [2].

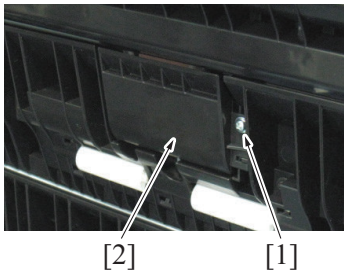

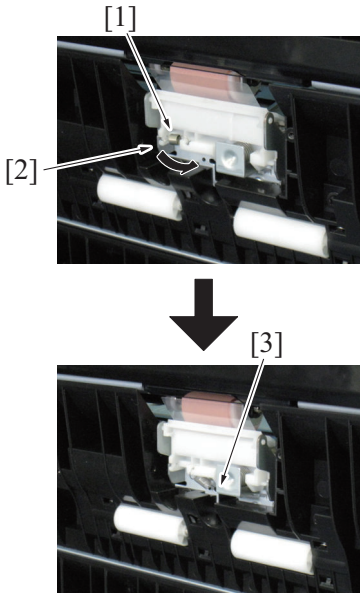

3. Hold the edge of the spring [1] with a plier, etc, to pull it off the hook part [2].
4. Hook the edge of the removed spring to the hook part [3] shown on the illustration.

5. Make a test print to check whether paper is fed properly.
6. When returning the pressure to the original status, return the hook of the spring in reverse steps.

16.2.4 Adjustment of the bypass CD paper size VR

(1) Purpose

This adjustment must be made in the following case:

- The bypass CD paper size VR has been removed.

(2) Procedure

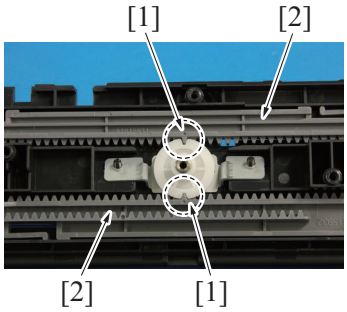

1. Align the match mark [1] on the bypass guide rack gear with the groove on the gear rim at two places and install two bypass guide rack gears [2].

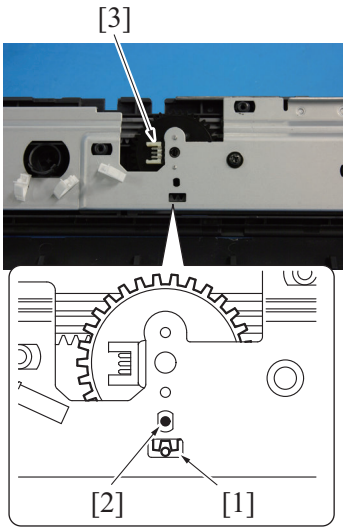

2. When installing the bypass CD paper size VR assy [3], make sure that the part [1] (pointed by the arrow) on the bypass guide rack gear and the gear's hole [2] on the bypass CD paper size VR assy are placed in a straight line.
3. Secure the bypass CD paper size VR assy with two screws.
4. After the bypass CD paper size VR base has been mounted, check that the lever of the bypass CD paper size VR moves smoothly in a manner operatively connected to the bypass guide.
5. Call the Service Mode to the screen and select [Machine] -> [Manual Bypass Tray Width Adj]. Then, carry out manual bypass tray width adjustment.

16.3 Fusing section

16.3.1 Adjusting the parallelism of the fusing unit path

(1) Purpose

This adjustment must be made in the following case:

- When the second transfer paper feed path and the fusing section path are not parallel and caused wrinkles on the paper.

(2) Procedure

1. Remove the fusing unit
   F.6.11.1 Replacing the fusing unit

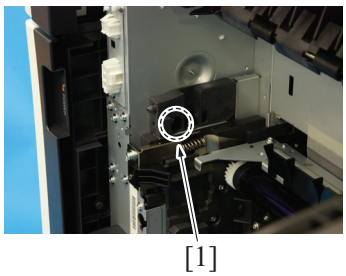

2. Remove the screw [1] for the fusing unit positioning material.

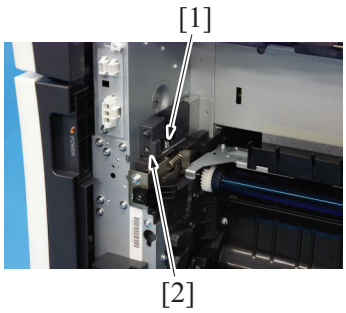

3. Remove the screw [1], and remove the fusing unit positioning material [2].

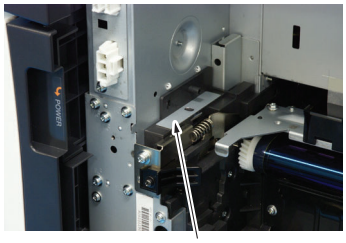

[1]

5. To reinstall, reverse the order of removal.
6. Make a test print to check whether paper is fed properly.

4. 0.6 mm adjusting shim plate [1] is installed as the standard status. Add or reduce the number of shims to adjust the parallelism.
   - Removing the standard adjusting shim plate: The fusing unit mounting position (front side) will move down by 0.6 mm.
   - Adding one adjusting shim plate: The fusing mounting position (front side) will move up by 0.6mm.

   Adjusting shim plate parts number: A161 1126##

17. MECHANICAL ADJUSTMENT DF-701

17.1 Original document feed section

17.1.1 Adjusting the height

(1) Purpose

This adjustment must be made in the following case:
- When the dual scan document feeder has been reinstalled.

(2) Procedure

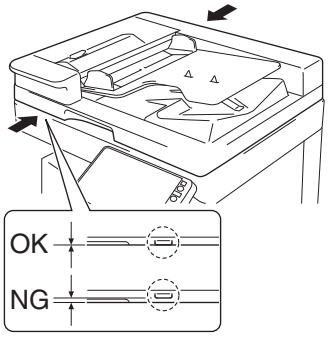

1. Check the clearance between the upper face of scanner and the protrusion [1] on the dual scan document feeder side (3 spots).
   NOTE
   - **There must be no clearance between the protrusion [1] on the dual scan document feeder and the upper face of scanner.**
2. If there is any clearance, the following adjustment is needed.

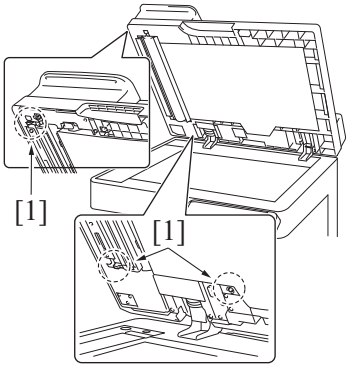

3. Remove the clearance by turning the adjusting screw [1].
   - Clockwise rotation: Lifting up the rear side
   - Counterclockwise rotation: Lowering the rear side
4. Use the adjusting screw [2] when further adjustment is needed.
   - Clockwise rotation: Lifting up the rear side
   - Counterclockwise rotation: Lowering the rear side

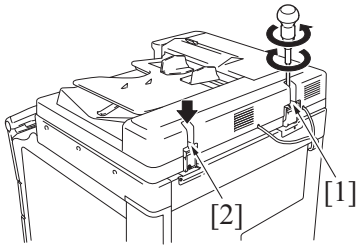

17.1.2 Adjusting front side skew feed on ADF

(1) Purpose

This adjustment must be made in the following case:
- When the dual scan document feeder has been reinstalled.

(2) Procedure

1. Check how the edges of the chart are misaligned.
   The amount of the deviation of the chart will be X.

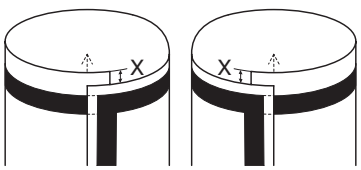

Deviation in + (plus) Deviation in - (minus)

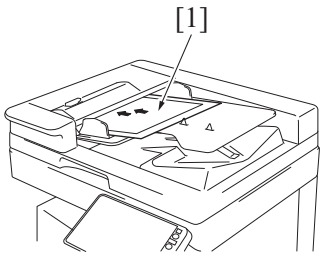

2. Place the chart [1] in the document feed tray (with the side having an arrow facing up).

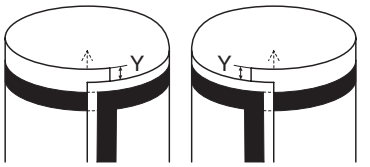

Deviation in + (plus) Deviation in - (minus)

3. Make copies 5 times repeatedly in single side mode.
4. Fold all 5 sample copies as illustrated and check for any deviation. Deviation on the sample will be Y.
5. Obtain the difference between the deviation of the chart and the deviation of the sample.
   Difference of the deviation = Y - X
   Target: 0 ± 2.0 mm
6. If the difference of the deviation does not fall within the target, perform the following adjustment.

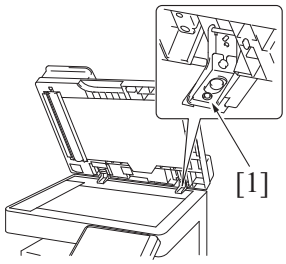

7. Loosen the mounting screw [1] on the right hinge viewed from the front.

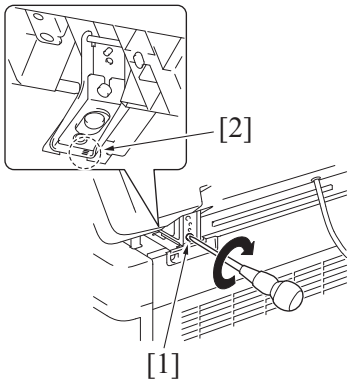

8. When the difference of the deviation is + (plus), turn the adjustment screw [1] located at the back of the dual scan document feeder clockwise to adjust.
   NOTE
   - **Look at the guide lines [2] when making the adjustment.**
   - **When turning the screw, be sure not to raise the dual scan document feeder until in an upright position.**
   - **To prevent the adjustment screw [1] breakage, be sure to follow the above instructions.**

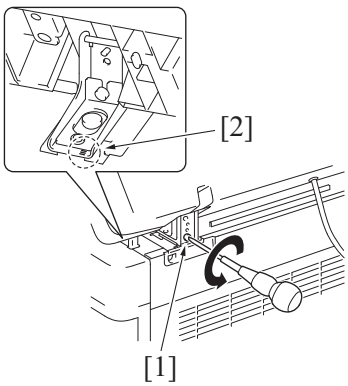

9. When the difference of the deviation is - (minus), turn the adjustment screw [1] located at the back of the dual scan document feeder counterclockwise to adjust.
   NOTE
   - **Look at the guide lines [2] when making the adjustment.**
   - **When turning the screw, be sure not to raise the dual scan document feeder until in an upright position.**
   - **To prevent the adjustment screw [1] breakage, be sure to follow the above instructions.**

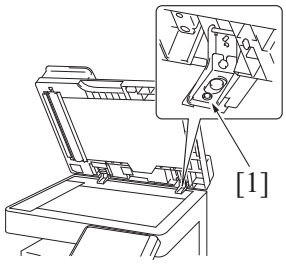

10. After the adjustment is completed, tighten the mounting screw [1] on right side hinge securely with screwdriver.

17.1.3 Adjusting back side skew feed on ADF

(1) Purpose

This adjustment must be made in the following case:

- When the dual scan document feeder has been reinstalled.
- When the CIS module has been reinstalled.

(2) Procedure

1. Check how the edges of the chart are misaligned.
The amount of the deviation of the chart will be X.

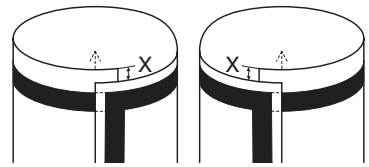

Deviation in + (plus) Deviation in - (minus)

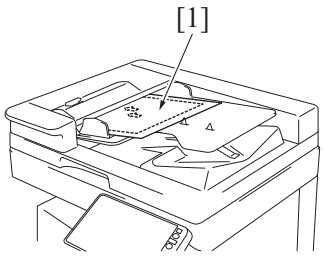

2. Place the chart [1] in the document feed tray (Set the chart with its blank side facing upward).

3. Make copies 5 times repeatedly in 2-side mode.
4. Fold all 5 sample copies as illustrated and check for any deviation.
Deviation on the sample will be Z.
5. Obtain the difference between the deviation of the chart and the deviation of the sample.
Difference of the deviation = Z - X
Target: 0 ± 3.0 mm
6. If the difference of the deviation does not fall within the target, perform the following adjustment.

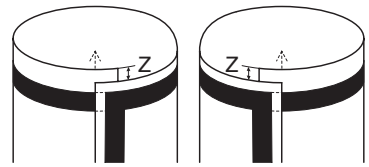

Deviation in + (plus) Deviation in - (minus)

7. Remove the front cover of the dual scan document feeder.
G.6.4.1 Front cover (DF-701)

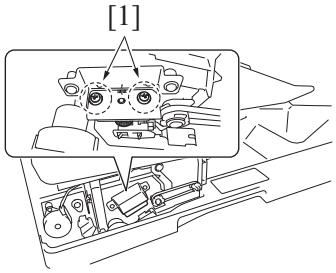

8. Loosen two screws [1].

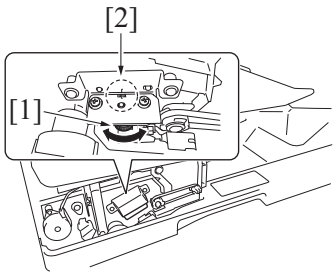

9. Depending on the difference of the deviations, turn the adjustment dial [1] using the marks [2] as a guide.
   - When the difference is a positive (+) value, turn the dial clockwise.
   - When the difference is a negative (-) value, turn the dial counterclockwise.

10. After completing the adjustment, tighten the screw loosened in step 8.
11. Make duplex sample copies and check the distance Z.
12. Install the front cover.

17.1.4 Adjusting the pressure of the separation roller

(1) Purpose

This adjustment must be made in the following case. The adjustment is available in two different levels.
- Original misfeed often occurs.

(2) Procedure

1. Open the left cover [1].

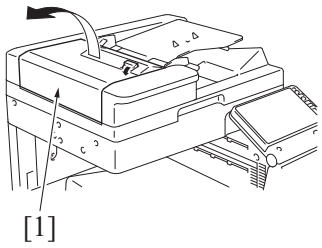

2. Grip both sides [1] of the holder and remove the cover [2].

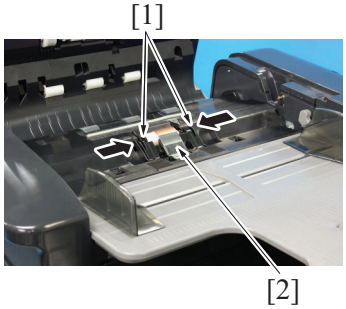

3. Remove the spacer [1] shown on the illustration.

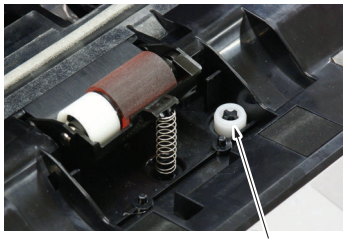

4. Set the spacer to the lower part of the spring in the direction shown on the illustration (with deeper groove facing upper side).
NOTE
- **When this procedure does not improve the situation, carry out the adjustment below for the stronger spring force.**

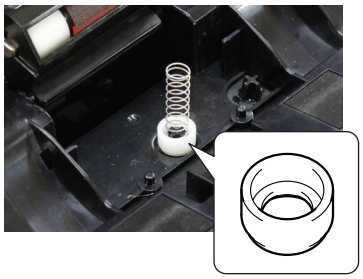

5. Set the spacer to the lower part of the spring in the direction shown on the illustration (with shallow groove facing upper side).

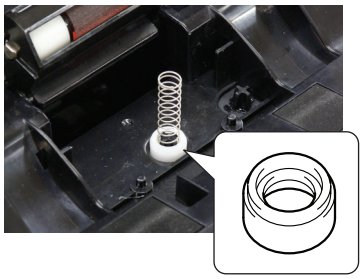

18. MECHANICAL ADJUSTMENT DF-624

18.1 Original document feed section

18.1.1 Adjusting the height

(1) Purpose

This adjustment must be made in the following case:
- When the reverse automatic document feeder has been reinstalled.

(2) Procedure

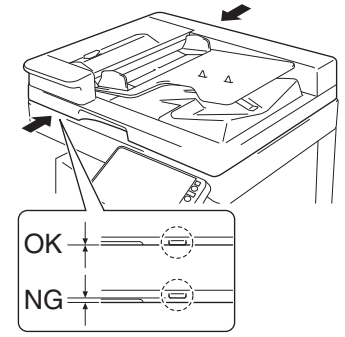

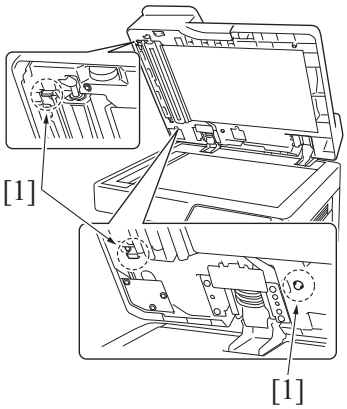

1. Check the clearance between the upper face of scanner and the protrusion [1] on the reverse automatic document feeder side (3 spots).
   NOTE
   - **There must be no clearance between the protrusion [1] on the reverse automatic document feeder and the upper face of scanner.**
2. If there is any clearance, the following adjustment is needed.

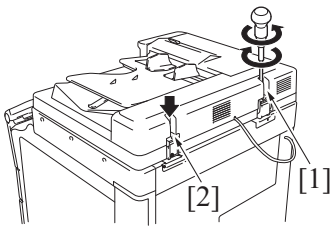

3. Remove the clearance by turning the adjusting screw [1].
   - Clockwise rotation: Lifting up the rear side
   - Counterclockwise rotation: Lowering the rear side
4. Use the adjusting screw [2] when further adjustment is needed.
   - Clockwise rotation: Lifting up the rear side
   - Counterclockwise rotation: Lowering the rear side

18.1.2 Adjusting front side skew feed on ADF

(1) Purpose

This adjustment must be made in the following case:
- When the reverse automatic document feeder has been reinstalled.

(2) Procedure

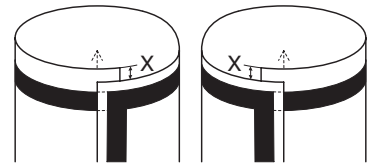

Deviation in + (plus) Deviation in - (minus)

1. Check how the edges of the chart are misaligned.
   The amount of the deviation of the chart will be X.

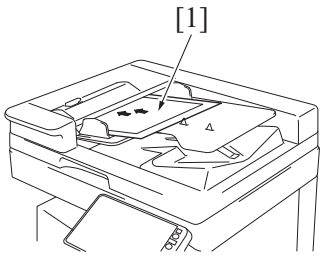

2. Place the chart [1] in the document feed tray (with the side having an arrow facing up).

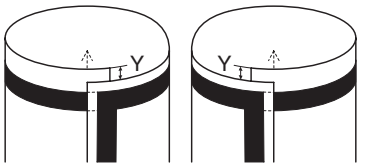

Deviation in + (plus) Deviation in - (minus)

3. Make copies 5 times repeatedly in single side mode.
4. Fold all 5 sample copies as illustrated and check for any deviation. Deviation on the sample will be Y.
5. Obtain the difference between the deviation of the chart and the deviation of the sample.
   Difference of the deviation = Y - X
   Target: 0 ± 2.0 mm
6. If the difference of the deviation does not fall within the target, perform the following adjustment.

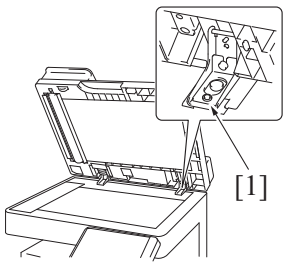

7. Loosen the mounting screw [1] on the right hinge viewed from the front.

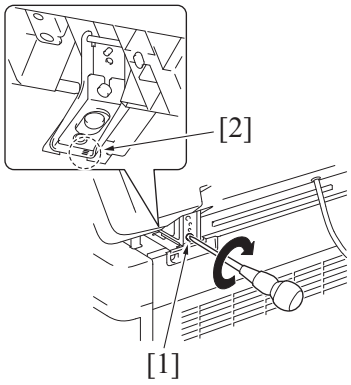

8. When the difference of the deviation is + (plus), turn the adjustment screw [1] located at the back of the reverse automatic document feeder clockwise to adjust.
   NOTE
   - **Look at the guide lines [2] when making the adjustment.**
   - **When turning the screw, be sure not to raise the reverse automatic document feeder until in an upright position.**
   - **To prevent the adjustment screw [1] breakage, be sure to follow the above instructions.**

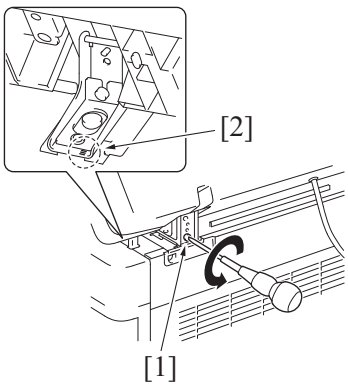

9. When the difference of the deviation is - (minus), turn the adjustment screw [1] located at the back of the reverse automatic document feeder counterclockwise to adjust.
   NOTE
   - **Look at the guide lines [2] when making the adjustment.**
   - **When turning the screw, be sure not to raise the reverse automatic document feeder until in an upright position.**
   - **To prevent the adjustment screw [1] breakage, be sure to follow the above instructions.**

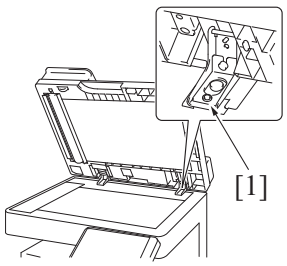

10. After the adjustment is completed, tighten the mounting screw [1] on right side hinge securely with screwdriver.

18.1.3 Adjusting the pressure of the separation roller

(1) Purpose

This adjustment must be made in the following case. The adjustment is available in two different levels.

- Original misfeed often occurs.

(2) Procedure

1. Open the left cover [1].

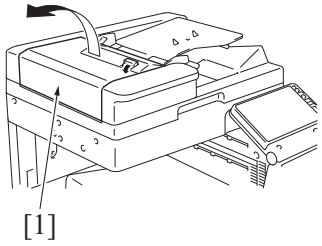

2. Grip both sides [1] of the holder and remove the cover [2].

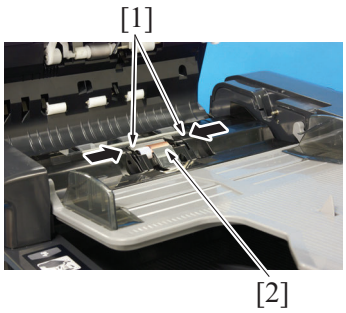

3. Remove the spacer [1] shown on the illustration.

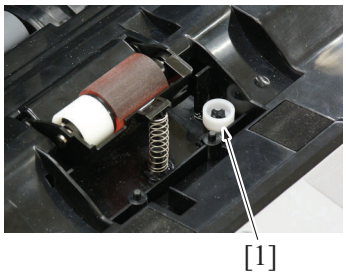

4. Set the spacer to the lower part of the spring in the direction shown on the illustration (with deeper groove facing upper side).

NOTE

- **When this procedure does not improve the situation, carry out the adjustment below for the stronger spring force.**

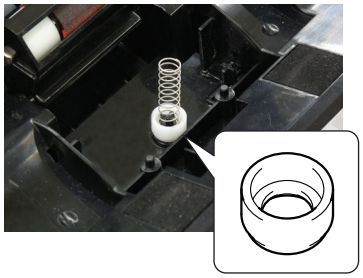

5. Set the spacer to the lower part of the spring in the direction shown on the illustration (with shallow groove facing upper side).

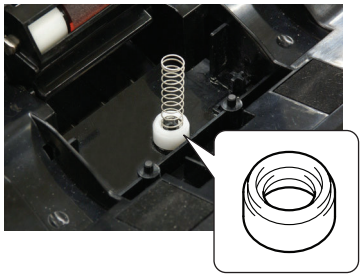

19. MECHANICAL ADJUSTMENT PC-110/PC-210

19.1 Paper reference position

19.1.1 Purpose

This adjustment must be made in the following case:

- When the PH unit has been replaced.
- When the image on the print is offset in the main scan direction.
- When adjustment in the following screen does not resolve a problem.
  [Service Mode] -> [Machine] -> [Printer Area] -> [Printer Image Centering Side 1].

  NOTE
  - **When the optional finisher FS-534 is installed, mechanical adjustment is necessary before adjustment [Printer Image Centering Side 1].**

19.1.2 Procedure

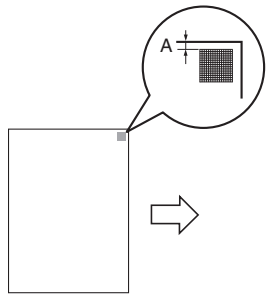

1. Measure the width of printed reference line A.
Target: 3.0 mm ± 1.0 mm

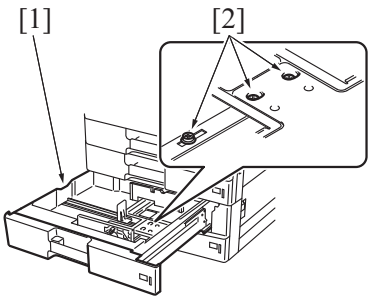

2. Slide out the tray [1] and unload paper from it.
3. Loosen three screws [2] at the center of the paper lifting plate.

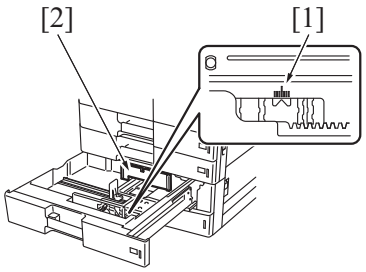

4. Watching the graduations [1] provided in the drawer, move the paper width guide [2] in the rear.
- If width A is greater than the target, move the paper width guide toward the front.
- If width A is smaller than the target, move the paper width guide toward the rear.

5. Tighten three screws which have been loosened.
6. Perform another test print and check the reference deviation.

20. MECHANICAL ADJUSTMENT PC-410

20.1 Paper reference position

20.1.1 Purpose

This adjustment must be made in the following case:

- When the PH unit has been replaced.
- When the image on the print is offset in the main scan direction.
- When adjustment in the following screen does not resolve a problem.
  [Service Mode] -> [Machine] -> [Printer Area] -> [Printer Image Centering Side 1].
  NOTE
  - **When the PH unit has been replaced.**

20.1.2 Procedure

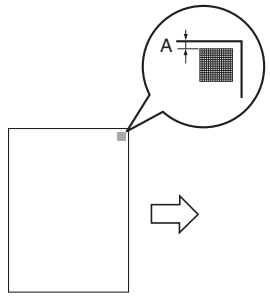

1. Measure the width of printed reference line A.
   Target: 3.0 mm ± 1.0 mm

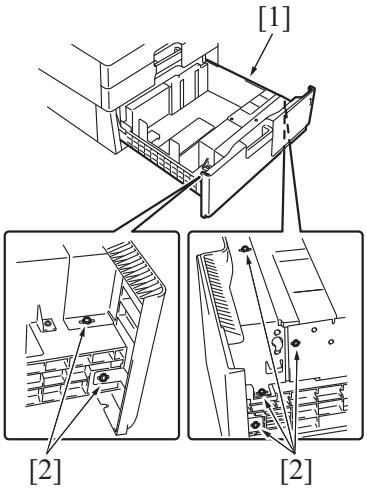

2. Slide out the paper feed tray [1] and unload paper from it.
3. Loosen six screws [2].

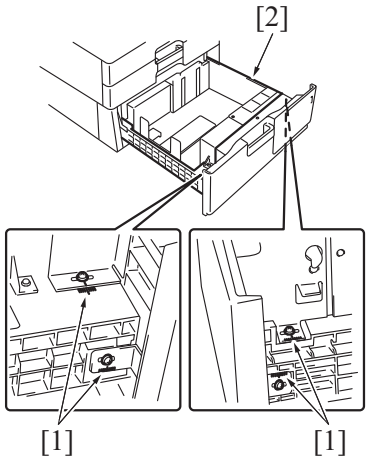

4. Watching the graduations [1] provided near the screws, move the front cover assy [2].
   - If width A is greater than the target, move the front cover assy toward the rear.
   - If width A is smaller than the target, move the front cover assy toward the front.

5. Tighten six screws which have been loosened.
6. Perform another test print and check the reference deviation.

20.2 Shifter movement timing belt adjustment

20.2.1 Procedure

1. Remove the paper feed tray.
   G.6.7.4 Paper feed tray (PC-410)

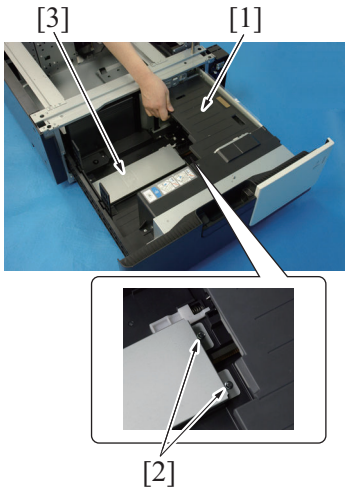

2. While raising the main tray [1], and remove two screws [2] that hold the shift tray in position.
   NOTE
   - **When reinstalling, use caution because the wire of the main tray [1] comes off easily.**
3. Remove the shift tray [3].

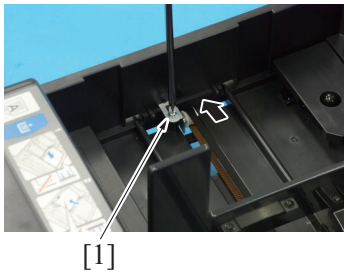

4. Move the sifter.
5. Loosen the tension pulley assy fixing screw [1] and move it in the direction of the arrow.
6. After moving the shifter, tighten the tension pulley assy fixing screw [1].

21. MECHANICAL ADJUSTMENT PK-519

21.1 Punch section

21.1.1 Punch hole deviation correction

(1) Purpose

This adjustment must be made in the following case:

- The punch holes are on a slanted line.

(2) Procedure

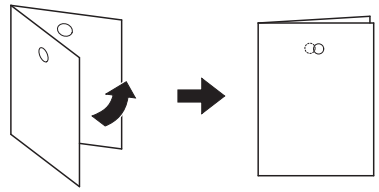

1. Set the mode to Punch mode for printing.
2. Hold the output paper half and check the displacement of the punch hole.
   Target: 0 ± 2.0 mm

3. If the positional deviation of the punch holes is not within the target range, take the following steps.
4. Slide the finisher by pulling its lever.

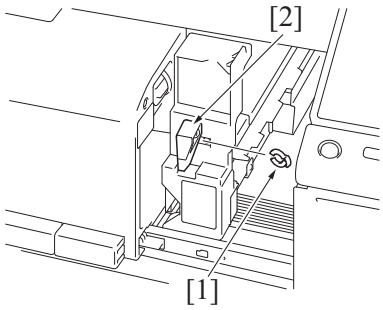

5. Remove the C-clip [1], and remove the lever [2].

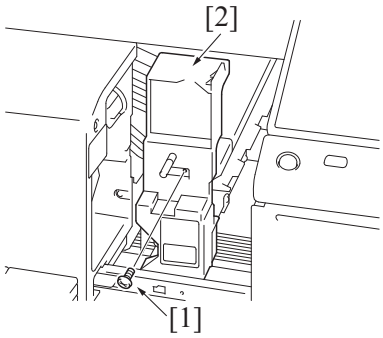

6. Remove the screw [1], and remove the cover [2].

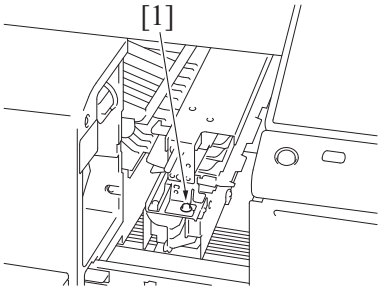

7. Loosen the screw [1].

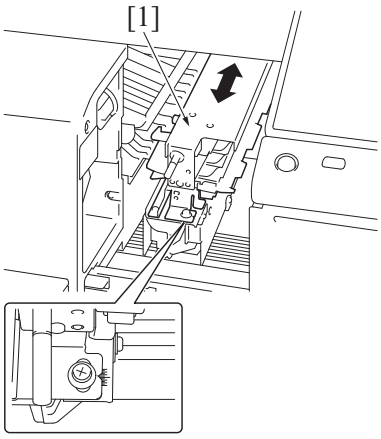

8. Move the punch unit [1] back and forth to adjust its position, referring to the guide lines.

9. Make a copy and check the punch hole positions again.
10. Make a copy and check the punch hole positions again.

22. MECHANICAL ADJUSTMENT PK-520

22.1 Punch section

22.1.1 Punch hole deviation correction

(1) Purpose

This adjustment must be made in the following case:
- The punch holes are on a slanted line.

(2) Procedure

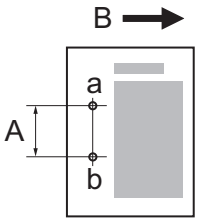

1. Make a 1sided copy sample in the punch mode.
   Face the printed surface upward.
   - [A]: The distance between holes
   - [B]: Paper feeding direction
   - [a]: Upper punch hole
   - [b]: Lower punch hole

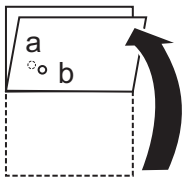

2. Fold the paper in half along the center in the paper feeding direction.

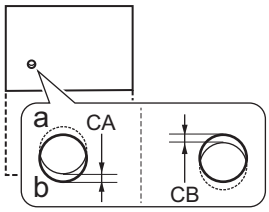

3. Measure the deviation amount [C] between punch holes [a] and [b].
   Target: D = 0 ± 1.0 mm

Ex.1

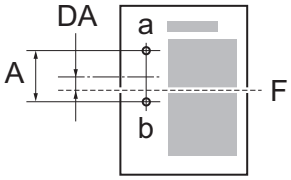

4. If the deviation between the punch holes [a] and [b] is [CA], the punch holes deviate upward in the figure relative to the paper folding line [F] (center in the paper feeding direction).
   Ex.1: Punch hole deviation amount [DA] = Measured value [CA] 3 mm ÷ 2 = -1.5 mm (hole positions deviate upward)

Ex.2

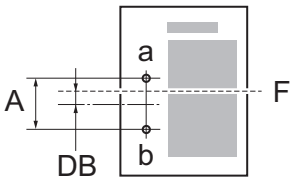

5. If the deviation between the punch holes [a] and [b] is [CB], the punch holes deviate downward in the figure relative to the paper folding line [F] (center in the paper feeding direction).
   Ex.2: Punch hole deviation amount [DB] = Measured value [CB] 3 mm ÷ 2 = +1.5 mm (hole positions deviate downward)

Ex.3

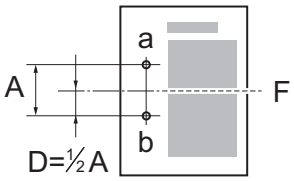

6. Complete the adjustment, if the deviation amount [D] between punch holes [a] and [b] falls within the target (±1.0 mm or less).
   Ex.3: Punch hole deviation amount [D] = Measured value [C] 0mm÷2 = 0 (punch hole deviation amount falls within the target)

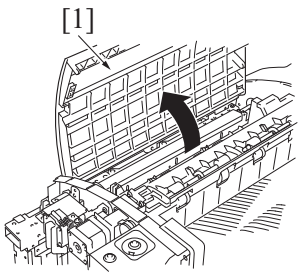

7. In case the figure exceeds the above mentioned target, follow the procedures shown below.
8. Open the upper cover [1].

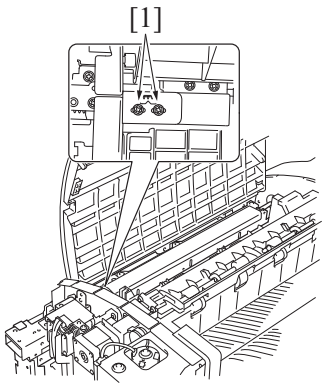

9. Loosen two screws [1].

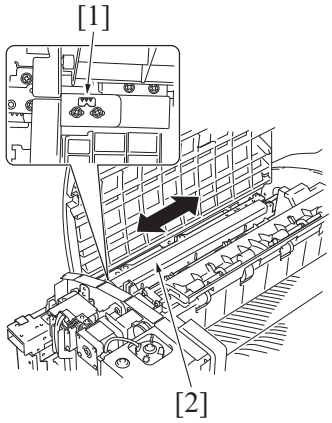

10. Using the triangle marks [1] on the plate as a guide, move the punch unit [2] back and forth to adjust its position.

23. MECHANICAL ADJUSTMENT SD-511

23.1 Paper exit section

23.1.1 Half-fold skew adjustment

(1) Purpose

This adjustment must be made in the following case:
- Fold line goes off the tolerance in the half-fold mode.
- When reinstalling the guide plate assy, perform mechanical adjustment.

(2) Procedure

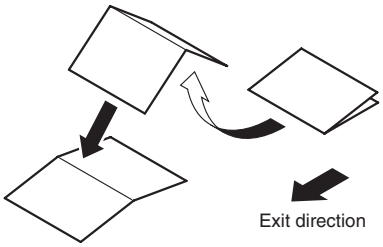

1. Make a copy in the half-fold mode.
2. Unfold the paper that exits the machine and lay the paper with the ridge facing up.

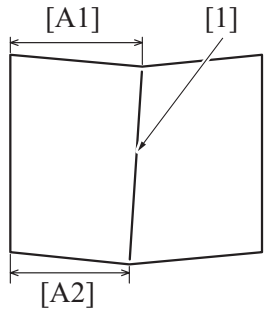

3. Confirm the skew of the fold line [1] of the output copy sample (Widths of A1 and A2)
   Target: A1-A2=±1.0 mm
4. In case the figure exceeds the above mentioned target, follow the adjustment procedures below.

5. Open the front door of the finisher.
6. Pull the saddle unit.

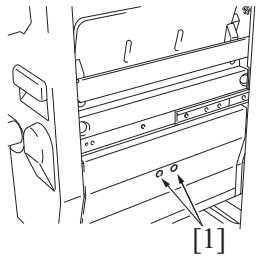

7. Loosen two screws [1].

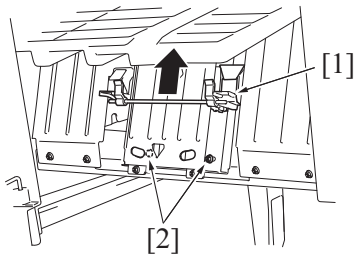

8. Slide the lever unit [1] upward.
9. Loosen two screws [2].

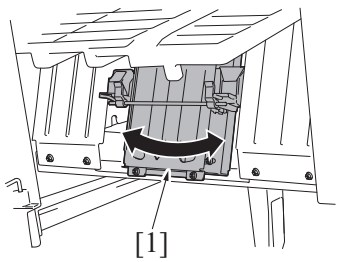

10. Incline the guide plate assy [1] forward or backward according to the deviation of the crease

In case the cease [1] skews as the right side:

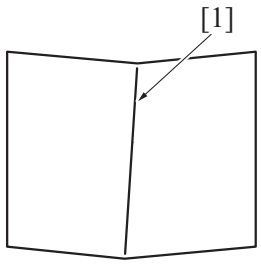

- In case the cease [1] skews as the right side:
  Incline the guide plate assy backward.
- In case the cease [1] skews as the left side:
  Incline the guide plate assy forward.

In case the cease [1] skews as the left side:

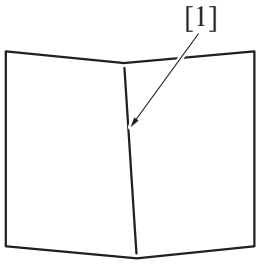

11. Make the copy sample again to confirm the cease skew.
12. Reinstall the above parts following the removal steps in reverse.

J REWRITING OF FIRMWARE

- There are two ways to update the firmware: One is by directly connecting with the main body using the USB memory device, and the other is by downloading over a network using the Internet ISW.

NOTE

- **The settings in the "Utility" mode and the "Service Mode" will not be changed, when the firmware is updated.**
- **Rewrite BootROM and install the loadable device driver, OCR dictionary, and PDF/A fonts as necessary depending on the firmware to be rewritten and the user's usage pattern.**

1. Confirming the firmware version

1.1 Procedure

1. Call the Service Mode to the screen.
2. Select the [Firmware Version].
3. Check if the firmware version is updated.

NOTE

- **After conducting firmware updating, check the firmware version No. and confirm that the firmware has been normally updated.**

2. USB memory

NOTE

- **USB memory must be connected with the main power switch off.**
- **When updating the firmware, use the service port.**
  It cannot be updated when connected to other USB port.

2.1 Preparation

Conditions for USB memory which can be used for updating the firmware are as follows:

- USB flash memory compatible with the USB (1.1/2.0) interface
- Formatted to the FAT32 file system
- Memory capacity of 2GB or less recommended.*1
- Not including security features (Possible to turn OFF security features)
- A USB flash memory that appears as multiple drives on a computer cannot be used.

NOTE

- ***1: Possible to be non-operational products.**

2.2 Procedure

1. Extract the obtained firmware data.
2. Connect the USB to the PC, and copy the extracted firmware data to the root directory of the USB memory.

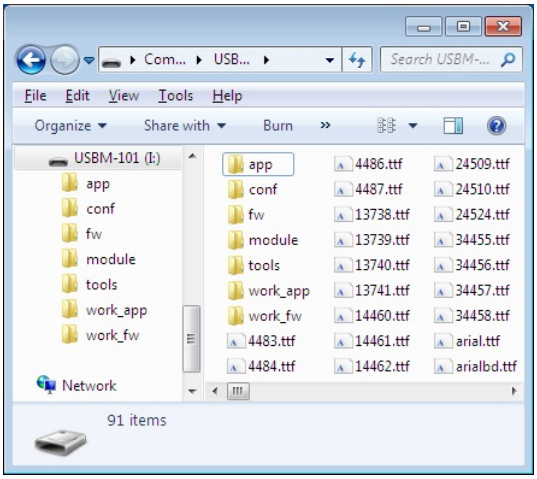

NOTE

- **More than one firmware data with a single model can be stored in the USB memory.**
  In this case, copy the firmware data to the USB memory according to the following procedures.
  1. **Copy the firmware data to the root directory of the USB memory.**
     (When making a folder and storing more than one firmware data, it is also necessary to copy the firmware data to the root directly.)
  2. **Make the folder named "FWSelect" (case-sensitive) to the root directory of the USB memory.**
  3. **Make a folder with any folder name (one byte alphameric characters, maximum 40 characters) under "FWSelect" folder, and store the firmware data to the folder.**

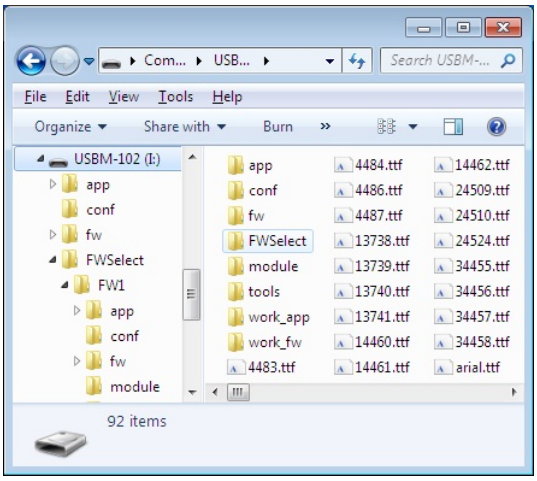

3. Turn OFF the main power switch.
4. Remove the screw [1].
5. Lift up the cover [2] of the service port.
6. Insert the USB memory device [3] to the service port.

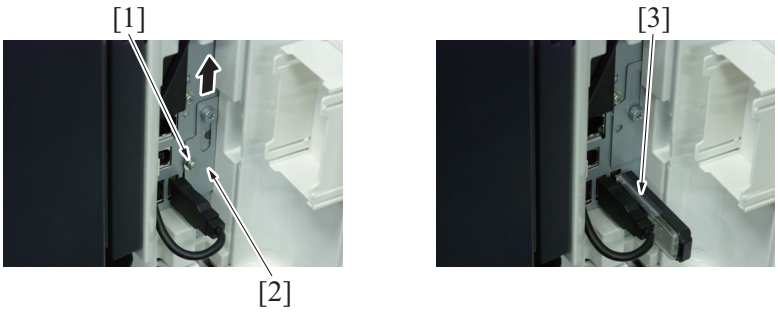

NOTE
- **USB memory must be connected with the main power switch off.**
- **When updating the firmware, use the service port.**
  It cannot be updated when connected to other USB port.

7. Turn ON the main power switch.
8. Control panel shows F/W items to be updated, and select the particular type of F/W to be updated. (Select [YES].)

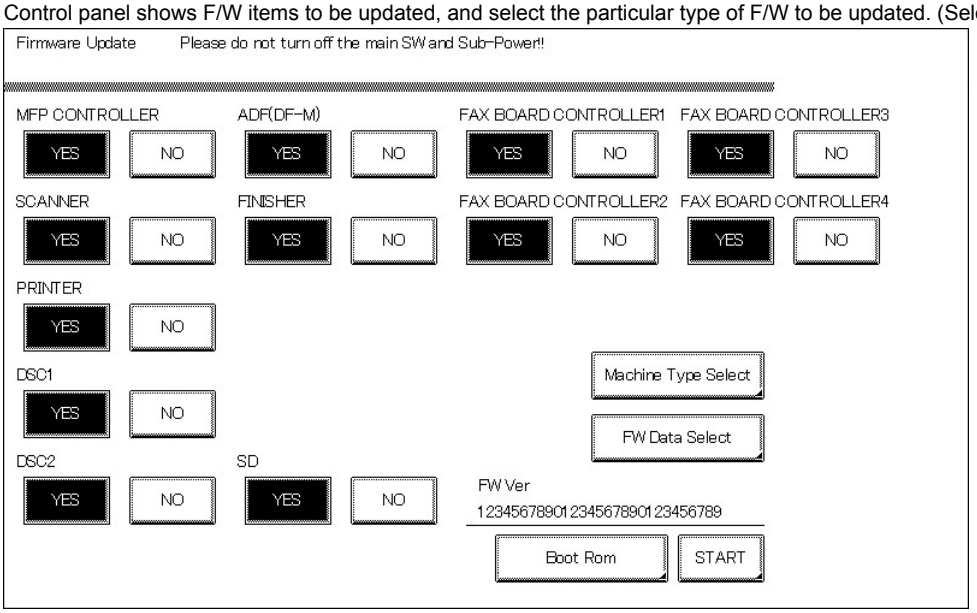

F/W to be updated	Appropriate board	Remark
MFP CONTROLLER	SSD board (SSDB)	
SCANNER	MFP board (MFPB)	
PRINTER	Printer control board (PRCB)	
DSC1	DSC board/1 (DSCB/1)	Only when SC-508 is mounted
DSC2	DSC board/2 (DSCB/2)	Only when SC-508 is mounted
ADF (DF-M)	DF control board (DFCB)	Only when DF-701/DF-624 is mounted
FINISHER	FS control board (FSCB)	Only when FS-533/FS-534 is mounted
SD	SD drive board (SDDB)	Only when SD-511 is mounted
FAX BOARD CONTROLLER1	Fax board/1 (FAXB/1)	Only when FK-511 is mounted
FAX BOARD CONTROLLER2	Fax board/2 (FAXB/2)	Only when FK-511 is mounted
FAX BOARD CONTROLLER3	Fax board/3 (FAXB/3)	Only when FK-508 is mounted
FAX BOARD CONTROLLER4	Fax board/4 (FAXB/4)	Only when FK-508 is mounted

NOTE
- **Unless one of the keys on the control panel is pressed, firmware is automatically updated after 30 seconds when the main power switch is turned on.**
- **When the BootRom file is in the firmware data, [BootRom] key is displayed. Pressing the key updates data.**
- **When more than one firmware are stored in step 1, pressing [FW Data Select] enables selection. (Data of other models cannot be selected.)**
  (Data with * at the left top of data selection screen will be the default data copied to the root directly in the USB memory.)
- **By pressing [Machine Type Select], you can set machine information. For details, refer to "J.2.4 Entering the machine type information".**

9. Press the [START]. (At this time, the Start key starts blinking red.)

10. Check that the control panel shows the message indicating that the data has been rewritten correctly ([Downloading Completed]). Check also the check sum value ([Check Sum ####]) shown on the control panel. (The Start key lights blue.)
11. Turn OFF the main power switch.
12. Remove the USB memory device, and fix the cover of the service port using a screw.
13. Turn ON the main power switch.
14. Call the Service Mode to the screen.
15. Select [Firmware Version].
16. Make sure if the version of firmware is updated.

2.3 Action when data transfer fails

- If “NG” appears on the control panel, indicating that rewriting has been unsuccessful (in which case the Start key lights up red), take the following steps.
  1. Perform the data rewriting procedure again.
  2. If the procedure is abnormally terminated, change the USB memory for a new one and try another rewriting sequence.
  3. If the procedure is still abnormally terminated, change the board that has caused “NG” and carry out data rewriting procedure.

F/W to be updated	Appropriate board	Remark
MFP CONTROLLER	SSD board (SSDB)	
SCANNER	MFP board (MFPB)	
PRINTER	Printer control board (PRCB)	
DSC1	DSC board/1 (DSCB/1)	Only when SC-508 is mounted
DSC2	DSC board/2 (DSCB/2)	Only when SC-508 is mounted
ADF (DF-M)	DF control board (DFCB)	Only when DF-701/DF-624 is mounted
FINISHER	FS control board (FSCB)	Only when FS-533/FS-534 is mounted
SD	SD drive board (SDDB)	Only when SD-511 is mounted
FAX BOARD CONTROLLER1	Fax board/1 (FAXB/1)	Only when FK-511 is mounted
FAX BOARD CONTROLLER2	Fax board/2 (FAXB/2)	Only when FK-511 is mounted
FAX BOARD CONTROLLER3	Fax board/3 (FAXB/3)	Only when FK-508 is mounted
FAX BOARD CONTROLLER4	Fax board/4 (FAXB/4)	Only when FK-508 is mounted

2.4 Entering the machine type information

- When MFP board is replaced, it is necessary to enter the machine type information.
- Refer to the following procedures to enter the machine type information.

Procedure

1. Insert the USB memory to the service port.
2. Turn ON the main power switch.
3. Touch [Machine Type Select].

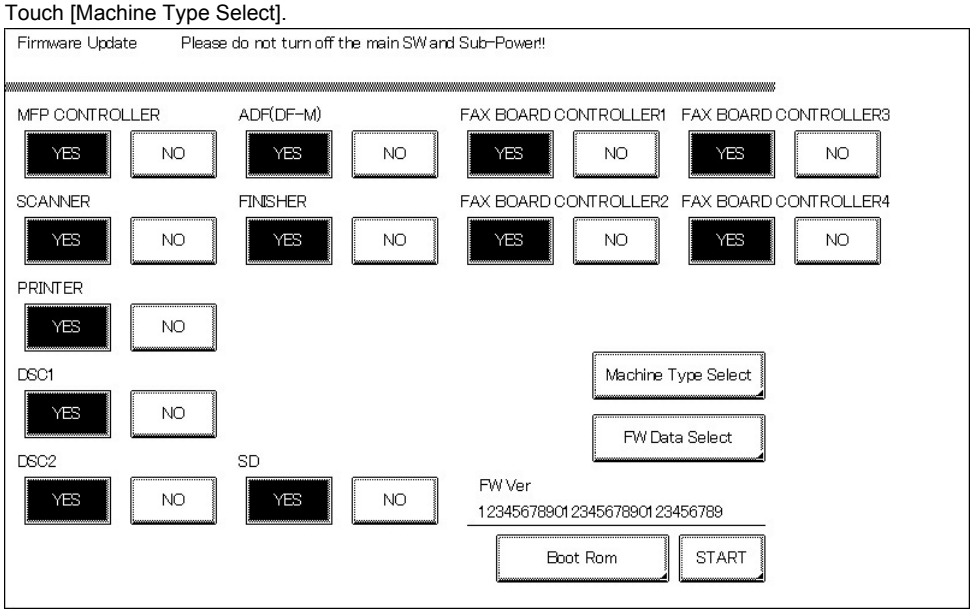

4. Enter [Machine] and [Type] information according to the following table. Then touch [Fix].

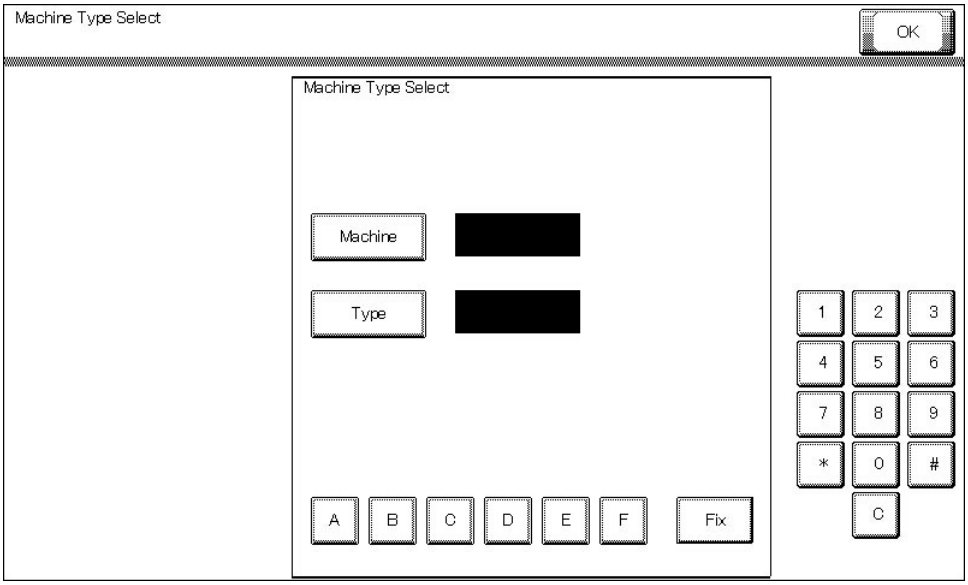

First four digits of the serial number	A61F	A61G	A61H
[Machine]	4	4	4
[Type]	1	2	3

5. Touch [OK], and turn OFF the main power switch.

3. Internet ISW

3.1 Preparations for firmware rewriting

3.1.1 Outline

"Internet ISW" is the system which makes the main body receive the firmware automatically from the program server through a network and rewrites (ISW) the firmware.
Two methods are included in the "Internet ISW" as shown below.

- To execute ISW by operating the control panel of the main body.
  With the "Internet ISW" using the control panel of the main body, the ISW can be executed at the user's without programs.
- To gives the instruction for executing ISW by using the internet mail (E-mail) from CS Remote Care.
  With the "Internet ISW" using CS Remote Care, the ISW can be executed from the remote region.

3.1.2 Service environment

The following conditions are necessary for using the Internet ISW function.

- The main body is connected to such a network environment that the firmware can be downloaded on the internet using the ftp or http protocol.

The "Internet ISW" will not operate under the following conditions.

- Main power switch is set to OFF.
- Sub power is set to OFF.
- When the following setting is set to "ON":
  [Administrator Settings] -> [Security Settings] -> [Enhanced Security Mode]
- Machine is operating, or there are jobs present (including appointed jobs).
- Machine is in idle with suspended job
- Paper jam has occurred
- Image file is in the memory
- Model or the circuit board of the program does not match

3.1.3 Preparations for firmware rewriting

- For using the Internet ISW, the network parameter, program server address as well as firewall address need to be set to the main body.
  I.11.30.1 Internet ISW - Internet ISW Set

(1) Internet ISW Set

1. Call the Service Mode to the screen.
2. Perform the following setting.
   [Machine Update Setting] -> [Internet ISW] -> [Inernet ISW Set]

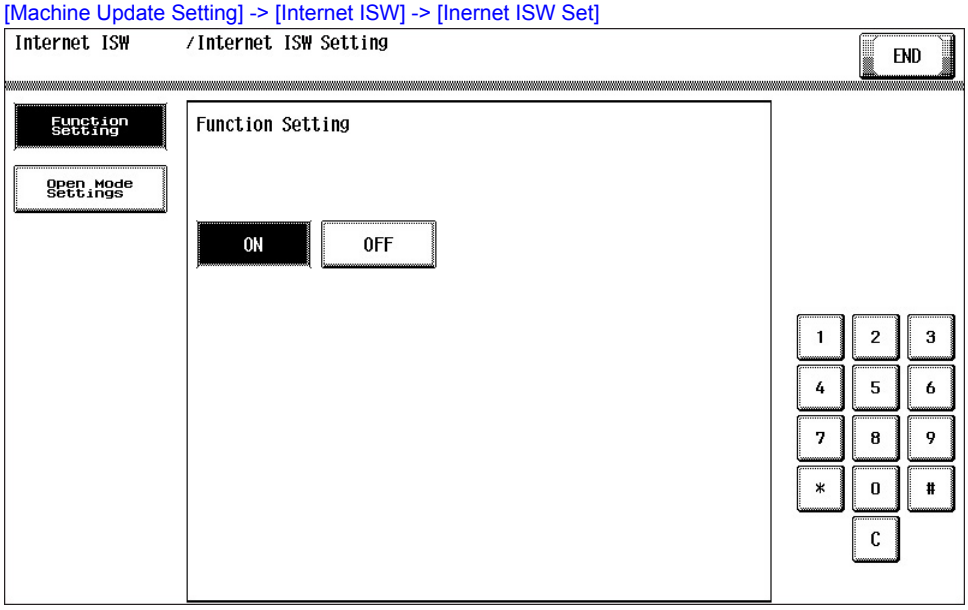

3. Select [ON] in [Function Setting], and touch [END].
   NOTE
   - **Settings such as server setting, etc. will be available by selecting "ON" on this setting.**
   - **When the following setting is set to "ON", "ON" cannot be selected on this setting.**
     [Administrator Settings] -> [Security Settings] -> [Enhanced Security Mode]
   - **To allow the administrator to rewrite firmware, press [Open Mode Settings] and select [Set].**

(2) Protocol setting

- It performs the setting concerning the protocol (ftp or http) for connecting to the Internet ISW.

(a) Connecting by http

1. Perform the following setting.
   [Service Mode] -> [Machine Update Setting] -> [Internet ISW]
2. Data input setting
   - Touch [HTTP Setting], and select [ON].

3. Connection Time-Out
   - Select [Connection Time-Out], and set the time for the connection time out between 30 and 300 seconds.

NOTE

- **To connect MFP to the Internet via a proxy, in addition to the configuration in [Forwarding Access Setting], the proxy server settings are necessary.**
  The settings of the proxy used in Internet ISW communications is configured in [Administrator Settings] -> [Network Settings] -> [Machine Update Settings] -> [HTTP Proxy Settings].

(b) Connecting by ftp

1. Perform the following setting.
   [Service Mode] -> [Machine Update Setting] -> [Internet ISW]
2. Data input setting
   - Touch [FTP Setting], and select [ON].
3. Connection Setting
   - Perform the setting for accessing FTP server.
     1. Select [Port Number], and set the port number for FTP server from 1 through 65535.
     2. Select [Connection Time Out], and set the time for the connection time out from 1 through 60.
     3. When connecting in PASV mode, select [PASV Mode], and select [ON].
        NOTE
        - **PASV Mode:**
          This mode is for transferring the file with FTP under the condition where communication is restricted such as inside the firewall. Since with PASV mode, the client with restriction sets the port number, data transmission port can be secured to enable the file transmission.

NOTE

- **To connect MFP to the Internet via a proxy, in addition to the configuration in [Forwarding Access Setting], the proxy server settings are necessary.**
  The settings of the proxy used in Internet ISW communications is configured in [Administrator Settings] -> [Network Settings] -> [Machine Update Settings] -> [Internet ISW Settings] -> [FTP Server Settings].

(3) Forwarding Access Setting

- To make the access setting for the program server which stores the firmware data.
  1. Perform the following setting.
     [Service Mode] -> [Machine Update Setting] -> [Internet ISW]
  2. Touch [Forwarding Access Setting].

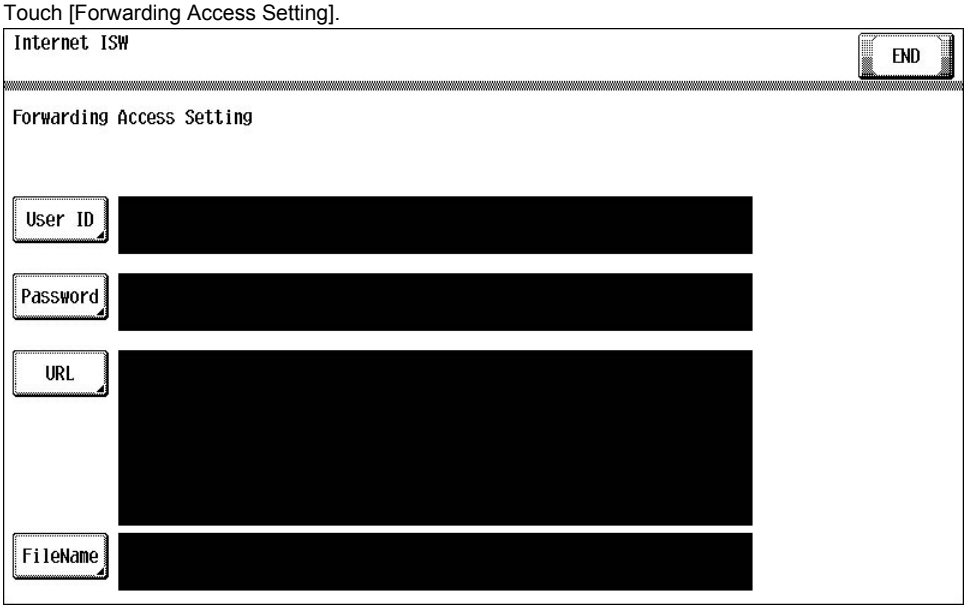

  3. Select [User ID], and enter the user ID which is necessary for connecting to the program server on the on-screen keyboard, and touch [END].
  4. Select [Password], and enter the password which is necessary for connecting to the program server on the on-screen keyboard, and touch [END].
  5. Select [URL], and enter the directory which stores the program server address and the firmware on the on-screen keyboard by URL method, and touch [END].
     NOTE
     - **Enter the URL which matches to the protocol to be used.**

When connecting to http	**http://(host name or IP address)/directory name or https://(host name or IP address)/directory name**
When connecting to ftp	**ftp://(host name or IP address)/directory name**

  6. Select [File Name], and enter the file name of the firmware data to be downloaded on the on-screen keyboard, and touch [END].
  7. Touch [OK] to finish setting.

3.2 Making the firmware data

3.2.1 Outline

- It is necessary to convert the firmware data and save it in the target directory of the Internet ISW server for upgrading the firmware via Internet ISW.

3.2.2 Procedure

1. Uncompress the firmware file.
2. Drag and Drop the firmware folder [1] which is in the uncompressed folder to the batch file [2] (mktar_ZeusBK.bat).

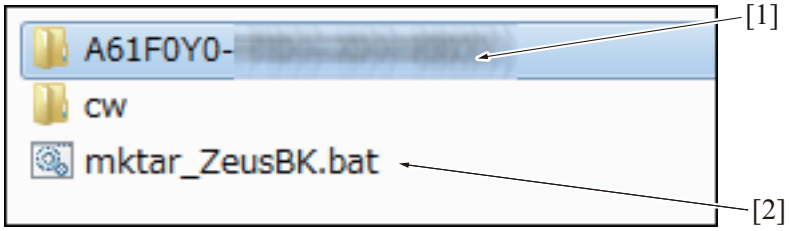

3. "making ZeusBK(A61F)" message in the command prompt window appears.

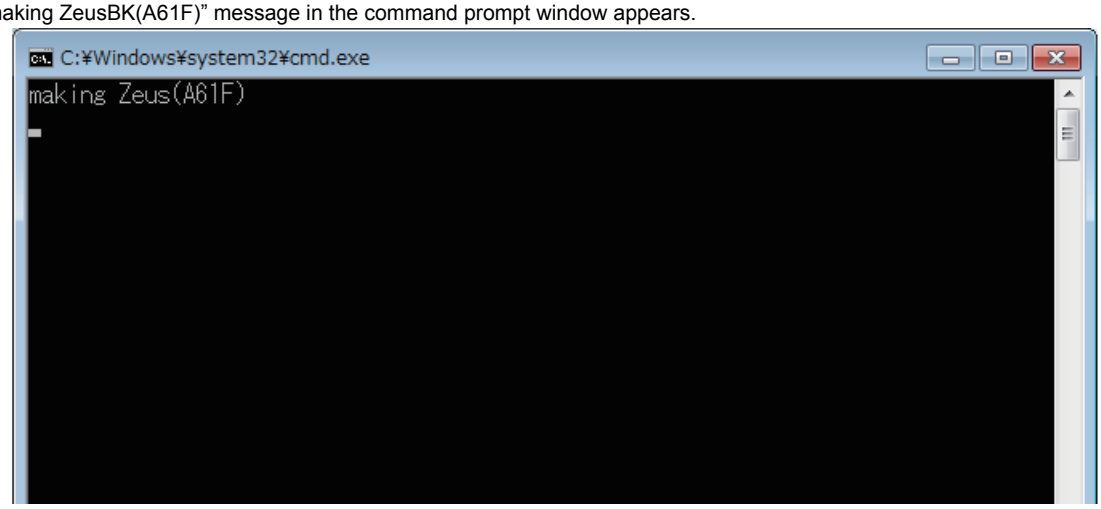

4. The command prompt window closed automatically.
5. "A61Ffw.tar" is created in the same directory.

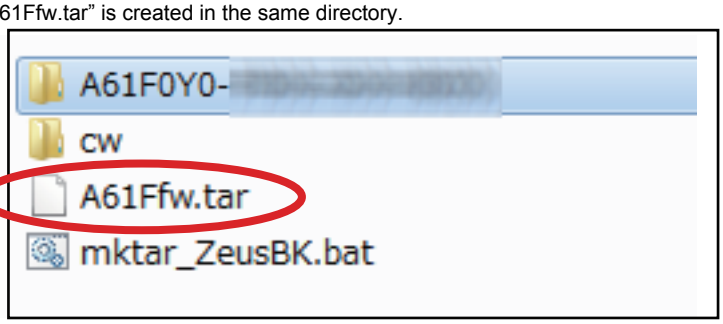

6. Copy the "A61Ffw.tar" in the firmware data directory of Internet ISW server.

3.3 Firmware rewriting from the control panel

3.3.1 Firmware rewriting from the control panel

NOTE

- **When performing the Internet ISW, ask the administrator for permission beforehand.**
- **DO NOT turn OFF the main power switch while downloading.**

(1) Conducting rewriting on the control panel

1. Perform the following setting.
   [Service Mode] -> [Machine Update Setting] -> [Internet ISW] -> [Download]
2. To download and update firmware data, select [Download/Update].
   To only download firmware data and update it later, select [Download].
3. Touch [Start].



4. MFP accesses the server and starts downloading the firmware data.
5. To download and update firmware data, select the types of firmware data to be written and replaced with a newer version in the Firmware Update screen and press [START].

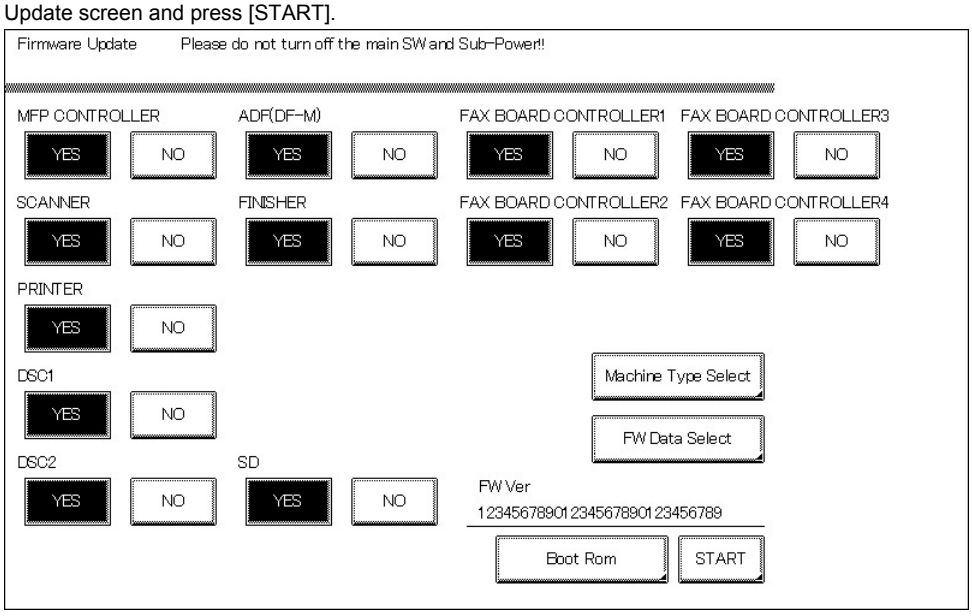

F/W to be updated	Appropriate board	Remark
MFP CONTROLLER	SSD board (SSDB)	
SCANNER	MFP board (MFPB)	
PRINTER	Printer control board (PRCB)	
DSC1	DSC board/1 (DSCB/1)	Only when SC-508 is mounted
DSC2	DSC board/2 (DSCB/2)	Only when SC-508 is mounted
ADF (DF-M)	DF control board (DFCB)	Only when DF-701/DF-624 is mounted
FINISHER	FS control board (FSCB)	Only when FS-533/FS-534 is mounted
SD	SD drive board (SDDB)	Only when SD-511 is mounted
FAX BOARD CONTROLLER1	Fax board/1 (FAXB/1)	Only when FK-511 is mounted
FAX BOARD CONTROLLER2	Fax board/2 (FAXB/2)	Only when FK-511 is mounted
FAX BOARD CONTROLLER3	Fax board/3 (FAXB/3)	Only when FK-508 is mounted
FAX BOARD CONTROLLER4	Fax board/4 (FAXB/4)	Only when FK-508 is mounted

NOTE

- **Unless one of the keys on the control panel is pressed, firmware is updated after 30 seconds when the unit has restarted.**

(2) During firmware updating

1. After rebooting the machine, MFP will connect to the server to download the firmware data.
2. The message to indicate the status will be displayed on the screen while connecting or transferring data.

(3) Completed or failed

(a) Firmware updated normally

1. When the Firmware is normally updated, restart the main body in auto or manual mode to display the outcome, and touch [OK] to return to the main screen.

(b) Failing to update the firmware due to the network trouble

1. When updating failed to complete due to the trouble on connecting to the network, an error code and the message will be displayed.
2. Restart the main body in auto or manual mode, and touch [OK]. It can be used with the firmware version before conducting updating.
3. Check the settings for the network by error codes, and try updating again.
   Network Error Code

(c) Failing to update the firmware after downloading has started

1. Once firmware updating has started, the ROM in the main body will be deleted.
   When it failed right after updating has started, restart the main body, and shift to the standby screen to retry downloading.
2. When updating on the control panel, touch [settings] on the standby screen, and check the Network settings again.
   Touch [Download], and restart the Internet ISW.

NOTE

- **Return to the standby screen without fail after turning the main power switch OFF/ON if the firmware is not updated.**
- **Firmware can be updated with the USB memory.**

4. Procedures for rewriting the firmware by using the Auto Update function

4.1 Outline

- "Auto Update" is the function, which makes the main body access the program server periodically through the network to obtain a new firmware, then rewrites it automatically.

4.2 Service environment

- The following conditions are necessary for using the Auto Update function.
- The main body is connected to such a network environment that the firmware can be downloaded by using the SMB or http protocol.
- The Auto Update function will not operate when the main body is under the following conditions.
  - Main power switch is set to OFF.
  - Sub power is set to OFF (Power switch blinks or lights up in orange)
  - When the following setting is set to "ON".
    [Administrator settings] -> [Security Settings] -> [Enhanced Security Mode]
  - MFP is operating, or there are jobs present (including appointed jobs).
  - MFP is in idle with suspended job.
  - Trouble has occurred.
  - Image file is in the memory.
  - Model or the circuit board of the program does not match.

4.3 Procedures for rewriting the firmware by using the Auto Update function

4.3.1 Preparations

- For using this function effectively, before executing the following procedures contact with the administrator to obtain an agreement.
- For using the Auto Update function, the network parameter, program server address as well as firewall address need to be set to the main body.
- Create a firmware file used to the "Internet ISW" and store it in the program server.
- Create a program update information file (C_UpdateList.ini) and store a set of data (folder including the firmware file) for updating in the program server.

(1) Method for creating the program update information file (C_UpdateList.ini)

- Specify the firmware, loadable driver, configuration files, firmware rewriting method as shown below.
  [FirmWare], Version, FilePath, [LoadableDriver], NumberOfFiles, [Config], [QuickUpdate] and Update must be specified by using the capital letters and small letters properly.

A sample of C_UpdateList.ini

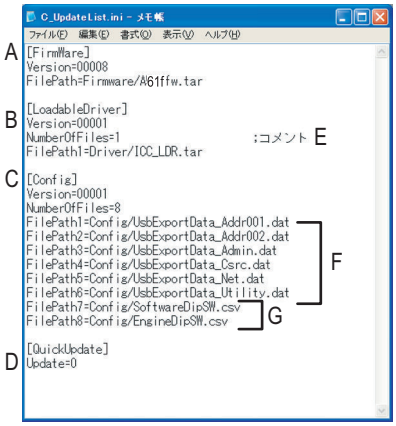

(a) A: Firmware updating information

- [FirmWare], Version, and FilePath are the necessary information.
- Change of version numbers (5-digit number) is to be recognized as that the file has been updated, and the file will be downloaded.
- Enter the path and file name in FilePath to access the firmware file.

(b) B: Loadable driver updating information

- [LoadableDriver], Version, and NumberOfFiles are the necessary information.
- Change of version numbers (5-digit number) is to be recognized as that the files have been updated, and the files will be downloaded.
- Specify the number of files at NumberOfFiles. (If not to download, set "0")
- Enter the path and file name in FilePath to access the Loadable Driver file.

(c) C: Configuration files updating information

- [Config], Version and NumberOfFiles are the necessary information.
- Change of version numbers (5-digit number) is to be recognized as that the files have been updated, and the files will be downloaded.
- Specify the number of files at NumberOfFiles. (If not to download, set "0")
- Enter the path and file name in FilePath to access the Configuration file(s).
- If multiple files exist, give a number to each of them as FilePath1, FilePath2 as shown in above illustration.

(d) D: Timing for updating data

- [QuickUpdate] and Update are the necessary information.

- If Update is set to "0", the downloaded firmware and each setting will be rewritten in accordance with the update time settings.
- If Update is set to "1", the firmware and each setting will be rewritten soon after downloading.

(e) E: Comment

- A comment can be inserted between "#" or ";" and the line break code.

(f) F: Create a configuration file

1. Select [Service Mode] -> [Machine Update Setting] -> [Machine Auto Update setting] -> [Machine Export setting].
2. Insert a USB memory into the USB port.
3. Enter a password.
4. Select [START].
5. "Result OK" will be displayed.
6. Complete the data export.

NOTE

- **On the MFP where a file is to be downloaded, the password specified at above step 3 must be set beforehand by selecting [Service Mode] -> [Machine Update Setting] -> [Machine Auto Update setting] -> [Machine Update Password].**

(g) G: Copy of Software switch setting and Engine FW DipSW setting

- Create CSV files for the data with the required switch number as SoftwareDipSW.csv and EngineDipSW.csv.

A sample of SoftwareDipSW.csv

	A	B	C
1	69	00000001	00000001
2	188	00000011	00000011
3			

A row	Software switch number
B row	Set 1 on the bit to be overwritten (bit7 to bit0 from left side)
C row	Set 1 or 0 for new setting at selected bit(s) on B row. (bit7 to bit0 from left side)

A sample of EngineDipSW.csv

	A	B
1	5	0
2	11	1
3	13	0
4		

A row	Engine FW DipSW number
B row	0 (not select) or 1 (select)

(2) Configuration of files and folders

- The folder configuration of the sample of C_UpdateList.ini in above (1) is as shown below.

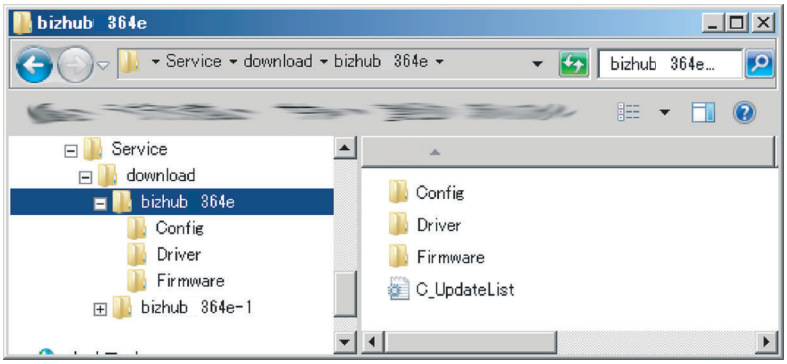

4.3.2 Download the firmware data automatically from the program server.

1. Select [Service Mode] -> [Machine Update Setting] -> [Machine Auto Update setting] -> [Auto Update setting].
2. Touch [Auto Update], then select [ON].
3. Select [Download Protocol], then select [SMB] or [HTTP].
4. Enter the information for accessing the program server on the setting screen of the protocol selected at step 3. At this time, specify the folder in which C_UpdateList.ini is stored at where to be accessed.

5. Set [Update Time].
6. Set [Polling Interval].
7. Set [Repeat Interval].

- See items in I.11.28.7 Machine Auto Update setting - Auto Update setting for details of each setting.
- The MFP confirms the program update information file in the program server with an interval set at [Polling Interval].
- The MFP compares the program update information file in the program server with that in the MFP, and starts downloading the firmware with a changed Version number.
- The downloaded firmware is to be stored in a HDD.
- To use the relay server function of the MFP, select [HTTP].

(1) Firmware Update

- Methods for updating the firmware are shown below.

(a) To update the downloaded firmware automatically.

- If the MFP power is set to ON at the time set with [Service Mode] -> [Machine Update Setting] -> [Machine Auto Update setting] -> [Auto Update setting] -> [Update time], the firmware will be rewritten automatically. If the power is set to OFF at that time, no rewriting will be executed.

(b) Update the downloaded firmware using the control panel.

- Select [Service Mode] -> [Machine Update Setting] -> [Machine Auto Update setting] -> [Manually Update] -> [Start], then execute rewriting.

NOTE

Do not set the power to OFF under the following state.

- **It takes about 45 seconds from touching [Manually Update] -> [Start] to the next operation of the MFP (Auto Power OFF).**
- **About one minute after the download completed screen being displayed, the MFP will restart.**
- **When rewriting configuration files followed by the firmware, the MFP will restart again.**

(2) Error Code

- The error code can be displayed using [Service Mode] -> [Machine Update Setting] -> [Machine Auto Update setting] -> [Update Log Display], or viewed on the PC where the log which saves up to 100 records sent by using [Transmission log Update] is received.

When using the SMB protocol:

Error code	Cause of error	Countermeasure
N00107	• Cannot access the SMB server	• Set the IP address of the server or the server name correctly. • Confirm that if the server runs normally.
N04098	• Authentication error	• Set the ID and the password correctly.
N04106	• Cannot obtain C_UpdateList.ini • Cannot find the data described in C_UpdateList.ini	• Confirm that if C_UpdateList.ini is stored in the server, and set the file path for accessing C_UpdateList.ini correctly. • Set the folder name and the file path correctly.

When using the HTTP protocol:

Error code	Cause of error	Countermeasure
N00107	• Cannot access the HTTP server	• Set the IP address of the server or the server name correctly. • Confirm that if the server runs normally.
N00401	• Authentication error	• Set the ID and the password correctly.
N00404	• Cannot obtain C_UpdateList.ini • Cannot find the data described in C_UpdateList.ini	• Confirm that if C_UpdateList.ini is stored in the server, and set the file path correctly to access C_UpdateList.ini. • Set the folder name and the file path correctly.

Common in all cases

Error code	Cause of error	Countermeasure
T10020	• Descriptions in C_UpdateList.ini are not correct	• Set the descriptions in C_UpdateList.ini correctly.
C00001	• Decryption error	• Set the decryption password for the configuration files correctly.

5. Firmware Distribute Server function (Relay server)

5.1 Outline

- "Relay Server" is the function, which shares the firmware files (relay data) obtained from the network with the other MFP, and works as the program server of the firmware "Auto Update" function.

NOTE

- **This function is disabled when the Marketing Area of the service mode is set to US or Others5.**

5.2 Service environment

- The following conditions are necessary for using the relay server function.
- The main body is connected to such a network environment that the firmware can be downloaded by using the http protocol.
- The relay server function will not operate under the following conditions.
  - Main power switch is set to OFF.
  - Sub power is set to OFF (Power switch blinks or lights up in orange)
  - When the following setting is set to "ON".
    [Administrator Settings] -> [Security Settings] -> [Enhanced Security Mode]

5.3 Firmware relay procedures by using "relay server function".

5.3.1 Preparations

- For using this function effectively, before executing the following procedures contact with the administrator to obtain an agreement.
- For using the Relay Server function, the network parameter, program server address as well as firewall address need to be set to the main body.
- Create a firmware file used to the "Internet ISW" and store it in the program server.
- Create one set of data used to the auto update function as the relay data, and store it in the program server. For details, refer to J.4. Procedures for rewriting the firmware by using the Auto Update function
- Create a data update information file (S_UpdateList.csv) and store up to four folders (four types) of data set in the program server for managing the relay data saved on one relay server machine.

(1) Methods for creating the data update information file (S_UpdateList.csv)

- To create a CSV file by specifying the model name, data update date and time, and path for accessing the firmware folder used to the Auto Update function as shown below.
  The data with changed date and time will be downloaded. Specify up to four (four types) folders of relay data set.

A sample of S_UpdateList.csv

	A	B	C
1	bizhub 364e Standard	2013/01/14 00:10:03	download/bizhub 364e
2	bizhub 364e Customer1	2013/01/20 00:10:03	download/bizhub 364e-1
3			

A row	Model name (any character string)
B row	Data update date and time
C row	Path for accessing the firmware folder used to the Auto Update function

(2) Configuration of files and folders

- The folder configuration of the sample of S_UpdateList.csv in above (1) is as shown below.

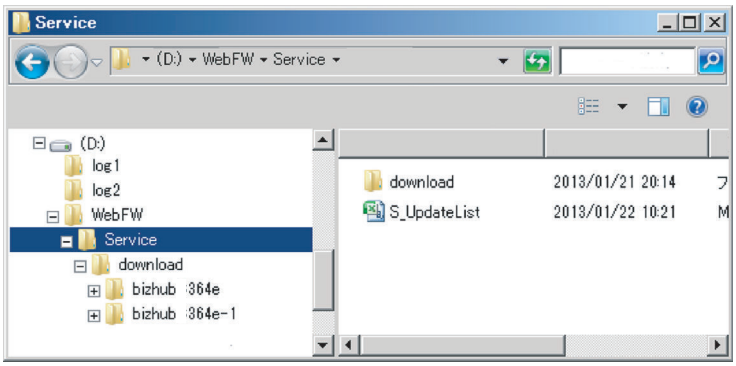

5.3.2 Download and open the relay data automatically from the program server.

1. Select [Service Mode] -> [Machine Update Setting] -> [Machine Auto Update setting] -> [Relay server setting].
2. Touch [Update File Download], then select [ON].
3. Select [Obtain Setting File].
4. Enter the information to access the program server on the setting screen. At this time, specify the folder on URL, in which S_UpdateList.csv is stored.
5. Set [Polling Interval].
6. Set [Repeat Interval].
7. Select [Distribution Server (HTTP)], then select [ON].
8. Set the information for accessing the distribution server.

NOTE

- **Do not use [SMB Authentication].**
- **The MFP confirms the data update information file in the program server with an interval set at [Polling Interval].**
- **The MFP compares the data update information file in the program server with that in the MFP, and starts downloading the relay data with a changed update date and time.**
- **The downloaded relay data is to be stored in a HDD.**

(1) Error Code

- The error code can be displayed using [Service Mode] -> [Machine Update Setting] -> [Machine Auto Update setting] -> [Relay Server Log Confirmation], or viewed on the PC where the log which saves up to 100 records sent by using [Transmission Server Log] is received.

Error code	Cause of error	Countermeasure
N00107	• Cannot access the HTTP server	• Set the IP address of the server or the server name correctly. • Confirm that if the server runs normally.
N00401	• Authentication error	• Set the ID and the password correctly.
N00404	• Cannot obtain S_UpdateList.csv • Cannot find the data described in S_UpdateList.csv	• Confirm that if S_UpdateList.csv is stored in the server, and set the file path for accessing S_UpdateList.csv correctly. • Set the folder name and the file path correctly.

5.3.3 Download the firmware opened from the relay server by using the Auto Update function on the other MFP.

- The following settings is to be configured on the MFPs other than the relay server, and the models corresponding to the relayed data.

1. Select [Service] -> [Machine Update Setting] -> [Machine Auto Update setting] -> [Auto Update setting].
2. Touch [Auto Update], then select [ON].
3. Select [Download Protocol], then select [HTTP] according to the settings of [Distribution Server] for the relay server.
4. Enter the information for accessing the relay server on the setting screen of the HTTP setting.
   At this time, specify the folder*1 in which C_UpdateList.ini is stored at where to be accessed.
5. Set [Update Time].
6. Set [Polling Interval].
7. Set [Repeat Interval].

*1: The file path in which a file is stored shall be set as shown below.
In [URL], "http://IP address or host name of the MFP working as relay server/DAV/Service/download/bizhub364e" (sample shown in 5.3.1.(1)).
In the file path on [URL], the capital letters and small letters are distinguished, then enter the part from "/DAV/Service/" as described in the row C of S_UpdateList.csv. The "DAV/Service/" is the specified path in the MFP relay server. If activate the relay server function in Administrator settings, the file path will be changed as "/DAV/Admin/".

6. CS Remote Care

6.1 Firmware rewriting from the CS Remote Care

- For detailed error information relating to CS Remote Care, refer to "I.11.6 CS Remote Care (Outlines)"
- For the firmware update procedure using CS Remote Care, refer to CS Remote Care Center Manual.

7. How to install the i-Option data

7.1 Available function for i-Option

i-Option	Function	Data location	How to recover when replacing or formatting HDD.
LK-101 v3	Web browser	In the Web browser firmware *	n/a
LK-102 v3	PDF processing	In the Standard firmware	I.11.15.23 Install Data
LK-104 v3	Voice guidance	In the Standard firmware	
LK-105 v3	Searchable PDF	In the Standard firmware	
LK-106	Barcode font	In the Standard firmware	n/a
LK-107	Unicode font	In the Standard firmware	LK-107/LK-108 font data installation procedure
LK-108	OCR font	In the Standard firmware	
LK-110	High functional Image Processing	In the Standard firmware	n/a
LK-111	Enhancing external linkage (supported by ThinPrint)	In the Standard firmware	

- *: Will be available in the near future.

7.2 LK-107/LK-108 font data installation procedure

Installing procedure of the font data

7.2.1 When the font data is ***.pdf format file

1. Prepare an USB memory.
2. Copy the font data to the root directory of the USB memory.
   - OCR font: download_OCRA-0.pdf
   - Unicode font: download_Andale_J-0.pdf, download_Andale_K-0.pdf, download_Andale_S-0.pdf, download_Andale_T-0.pdf
3. Turn ON the main power switch, and connect the USB memory to the USB port on the side of the control panel.
4. The message “Print a document from External Memory” will be displayed on the control panel, and select it.
5. The font data in the USB memory will be displayed, and select these data to print out.
6. The message “Document Printing Failed” will be displayed, and touch [OK].
7. Print out a PCL font list, and confirm that the font data are registered as following names.
   - LK-107: Andale Mono WT J, Andale Mono WT K, Andale Mono WT S, Andale Mono WT T
   - LK-108: OCR-A

K TROUBLESHOOTING

1. JAM CODE

(1) JAM DISPLAY

- When the paper jam occurred, the message, the position jam occurred (number blinks), position of the remaining paper (number lights up), and the JAM code are displayed.

NOTE

- **JAM code is displayed on the jam warning screen only when the following setting is set to "Display."**
  [Service Mode] -> [System 2] -> [JAM Code Display Setting]

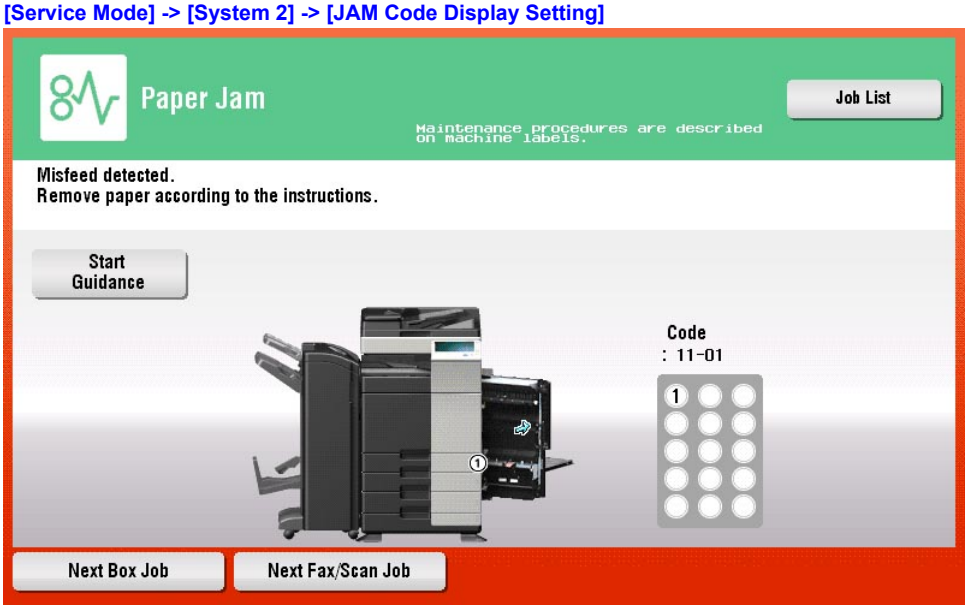

(2) Misfeed display resetting procedure

1. Open the corresponding door, clear the sheet of paper misfed, and close the door.
2. Touch "OK" displayed on the touch panel.

1.1 List of the JAM code

JAM code	JAM type
10-01	Manual bypass feed section
10-02	
10-40	
11-01	Tray 1 feed section
11-02	
11-40	
12-01	Tray 2 feed section
12-40	
13-01	Tray 3 feed section
13-40	
14-01	Tray 4 feed section
14-40	
16-01	LCT feed/vertical transport section
16-40	
20-01	Vertical transport section
20-02	
20-21	
20-22	
30-03	2nd transfer section
32-01	Exit section
32-05	
66-01	DF turnover section <When DF-624 is installed>
66-11	
66-21	
66-02	DF paper feed section <When DF-624 or DF-701 is installed>
66-12	
66-03	DF transport section <When DF-624 or DF-701 is installed>

JAM code	JAM type
66-13	
66-23	
66-33	
66-04	DF paper exit section <When DF-624 or DF-701 is installed>
66-14	
66-24	DF paper exit section <When DF-624 is installed>
66-34	
66-05	DF image reading section <When DF-624 or DF-701 is installed>
66-06	
66-15	DF image reading section <When DF-624 is installed>
66-07	DF paper feed/transport/image reading/turnover/paper exit section <When DF-624 or DF-701 is installed>
72-14	FS transport section <When FS-534 is installed>
72-15	FS transport section <When FS-534 is installed>
72-16	FS transport section <When FS-534, FS-533 or FS-533+PK-519 is installed>
72-17	FS transport section <When FS-534 or FS-533 is installed >
72-18	FS transport section <When FS-534 is installed>
72-19	FS transport section <When FS-534 is installed>
72-21	FS transport section <When FS-534 or FS-533 is installed>
72-22	FS transport section <When FS-534 is installed>
72-23	FS transport section <When FS-534 is installed>
72-25	SD paper exit section <When FS-534+SD-511 is installed>
72-26	SD paper exit section <When FS-534+SD-511 is installed>
72-43	PK JAM <When FS-534+PK-520 or FS-533+PK-519 is installed>
72-70	PK JAM <When FS-533+PK-519 is installed>
72-81	FS staple section <When FS-533 is installed>
72-85	SD transport section <When FS-534+SD-511 is installed>
72-86	SD transport section <When FS-534+SD-511 is installed>
72-87	SD transport section <When FS-534+SD-511 is installed>
75-42	RU section <When FS-534 is installed>
75-43	RU section <When FS-534 is installed>
92-01	Duplex pre-registration section
92-02	
92-40	
93-10	Duplex transport section
99-01	Controller JAM (paper size error)
99-02	Controller JAM (controller forced stop command)
99-03	Controller JAM
99-04	Controller JAM (finisher pre-drive is not completed)
99-05	Controller JAM (main body not starting a job)
99-06	Controller JAM (finisher internal processing error)
99-07	Controller JAM (main body not completing a job)
99-08	Controller JAM (finisher not starting a job)
99-09	Controller JAM (finisher not completing a job)

1.2 JAM that do not display the JAM code

JAM type	Detection timing	Ref. page
Manual bypass feed section	In case paper position is detected as locating properly after main power switch is turned ON, door and cover are opened /closed or jam/trouble reset is done, it is regarded as paper jam at manual bypass feed section.	K.1.6.1 10-01, 10-02, 10-40
Tray 1 feed section	Tray 1 paper feed sensor (PS23) is turned ON when the main power switch is turned ON, a door or cover is opened and closed, or a misfeed or malfunction is reset.	K.1.6.2 11-01, 11-02, 11-40
	In case paper position is detected as locating properly after main power switch is turned ON, door and cover are opened /closed or jam/trouble reset is done, it is regarded as paper jam at tray 1 feed section.	
Tray 2 feed section	Tray 2 vertical transport sensor (PS19) is turned ON when the main power switch is turned ON, a door or cover is opened and closed, or a misfeed or malfunction is reset.	K.1.6.3 12-01, 12-40
	Tray 2 paper feed sensor (PS20) is turned ON when the main power switch is turned ON, a door or cover is opened and closed, or a misfeed or malfunction is reset.	

JAM type	Detection timing	Ref. page
	In case paper position is detected as locating properly after main power switch is turned ON, door and cover are opened /closed or jam/trouble reset is done, it is regarded as paper jam at tray 2 feed section.	
Tray 3 feed section	Tray 3 vertical transport sensor (PS113) is turned ON when the main power switch is turned ON, a door or cover is opened and closed, or a misfeed or malfunction is reset.	K.1.6.4 13-01, 13-40
	Tray 3 paper feed sensor (PS112) is turned ON when the main power switch is turned ON, a door or cover is opened and closed, or a misfeed or malfunction is reset.	
	In case paper position is detected as locating properly after main power switch is turned ON, door and cover are opened / closed or jam/trouble reset is done, it is regarded as paper jam at tray 3 feed section.	
Tray 4 feed section	Paper feed sensor (PS132) is turned ON when the main power switch is turned ON, a door or cover is opened and closed, or a misfeed or malfunction is reset.	K.1.6.5 14-01, 14-40
	Vertical transport sensor (PS133) is turned ON when the main power switch is turned ON, a door or cover is opened and closed, or a misfeed or malfunction is reset.	
	In case paper position is detected as locating properly after main power switch is turned ON, door and cover are opened / closed or jam/trouble reset is done, it is regarded as paper jam at LCT feed section or LCT vertical transport section.	
LCT feed/vertical transport section	Paper feed sensor (PS132) is turned ON when the main power switch is turned ON, a door or cover is opened and closed, or a misfeed or malfunction is reset.	K.1.6.6 16-01, 16-40
	Vertical transport sensor (PS133) is turned ON when the main power switch is turned ON, a door or cover is opened and closed, or a misfeed or malfunction is reset.	
	In case paper position is detected as locating properly after main power switch is turned ON, door and cover are opened / closed or jam/trouble reset is done, it is regarded as paper jam at LCT feed section or LCT vertical transport section.	
Vertical transport section	In case paper position is detected as locating properly after main power switch is turned ON, door and cover are opened /closed or jam/trouble reset is done, it is regarded as paper jam at vertical transport section.	K.1.7.2 20-21 K.1.7.3 20-22
2nd image transfer section	The sensor in front of tim. roller (PS1) is unblocked when the main power switch is turned ON, a door or cover is opened and closed, or a misfeed or malfunction is reset.	K.1.8.1 30-03
	The paper exit sensor (PS3) is unblocked when the main power switch is turned ON, a door or cover is opened and closed, or a misfeed or malfunction is reset.	
	In case paper position is detected as locating properly after main power switch is turned ON, door and cover are opened / closed or jam/trouble reset is done, it is regarded as paper jam at 2nd image transfer section.	
Exit section	The paper exit sensor (PS3) is blocked when the main power switch is unblocked, a door or cover is opened and closed, or a misfeed or malfunction is reset.	K.1.8.2 32-01, 32-05
	In case paper position is detected as locating properly after main power switch is turned ON, door and cover are opened /closed or jam/trouble reset is done, it is regarded as paper jam at exit section.	
Duplex pre-registration section	In case paper position is detected as locating properly after main power switch is turned ON, door and cover are opened / closed or jam/trouble reset is done, it is regarded as paper jam at duplex pre-registration section.	K.1.11.1 92-01, 92-02, 92-40
Duplex transport section	In case the ADU paper passage sensor/1 (PS40) is blocked or the ADU paper passage sensor/2 (PS41) is unblocked after main power switch is turned ON, door and cover are opened / closed or jam/trouble reset is done, it is regarded as paper jam at duplex transport section.	K.1.11.2 93-10
	In case the registration sensor (PS1) is unblocked after main power switch is turned ON, door and cover are opened / closed or jam/trouble reset is done, it is regarded as paper jam at duplex transport section.	
	In case paper position is detected as locating properly after main power switch is turned ON, door and cover are opened / closed or jam/trouble reset is done, it is regarded as paper jam at duplex transport section.	

1.3 Sensor layout

1.3.1 bizhub 364e/284e/224e

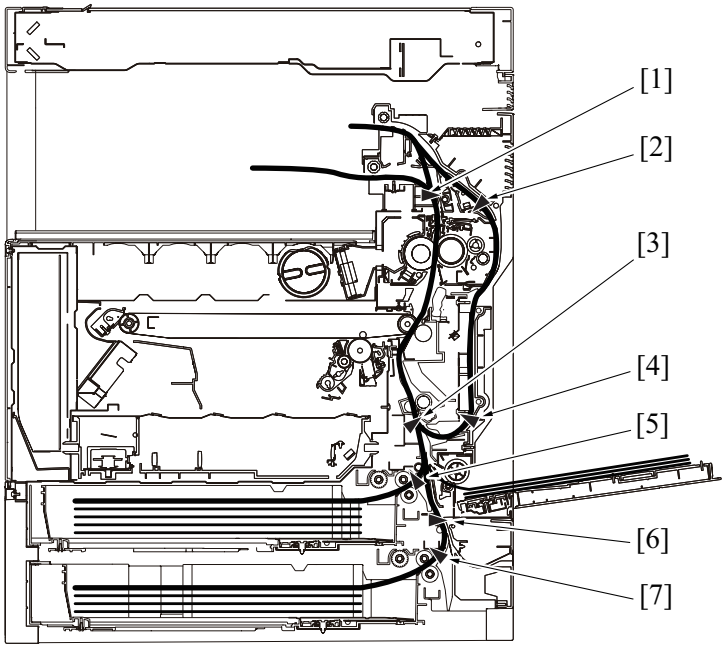

[1]	Paper exit sensor (PS3)	[2]	ADU paper passage sensor/1 (PS40)
[3]	Registration sensor (PS1)	[4]	ADU paper passage sensor/2 (PS41)
[5]	Tray 1 paper feed sensor (PS23)	[6]	Tray 2 vertical transport sensor (PS19)
[7]	Tray 2 paper feed sensor (PS20)	-	-

1.3.2 DF-701

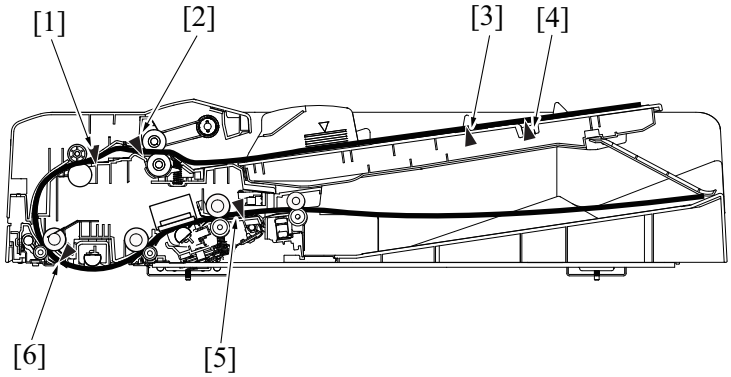

[1]	Registration sensor (PS3)	[2]	After separate sensor (PS2)
[3]	Document length sensor/1 (PS8)	[4]	Document length sensor/2 (PS9)
[5]	Document exit sensor (PS5)	[6]	Document reading sensor (PS6)

1.3.3 DF-624

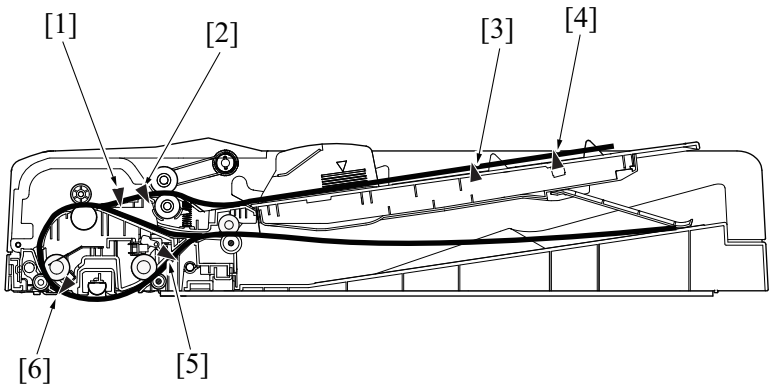

[1]	Document registration sensor (PS3)	[2]	After Separate sensor (PS2)
[3]	Document length size sensor/1 (PS6)	[4]	Document length size sensor/2 (PS7)
[5]	Document exit sensor (PS5)	[6]	Document reading sensor (PS4)

1.3.4 PC-110/PC-210

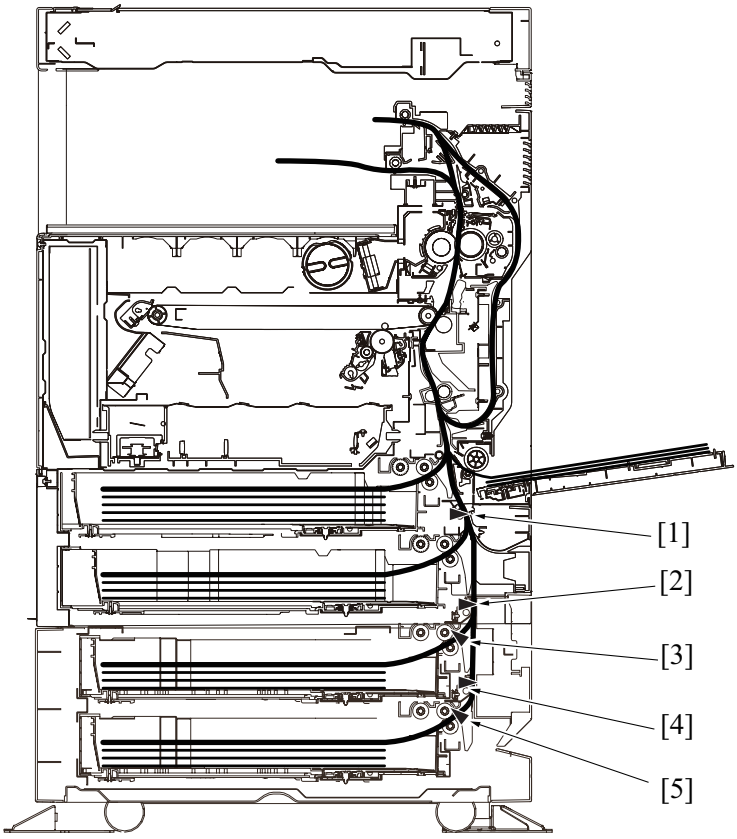

[1]	Tray 2 vertical transport sensor (PS19)	[2]	Tray 3 vertical transport sensor (PS113)
[3]	Tray 3 paper feed sensor (PS112)	[4]	Tray 4 vertical transport sensor (PS123)
[5]	Tray 4 paper feed sensor (PS122)	-	-

1.3.5 PC-410

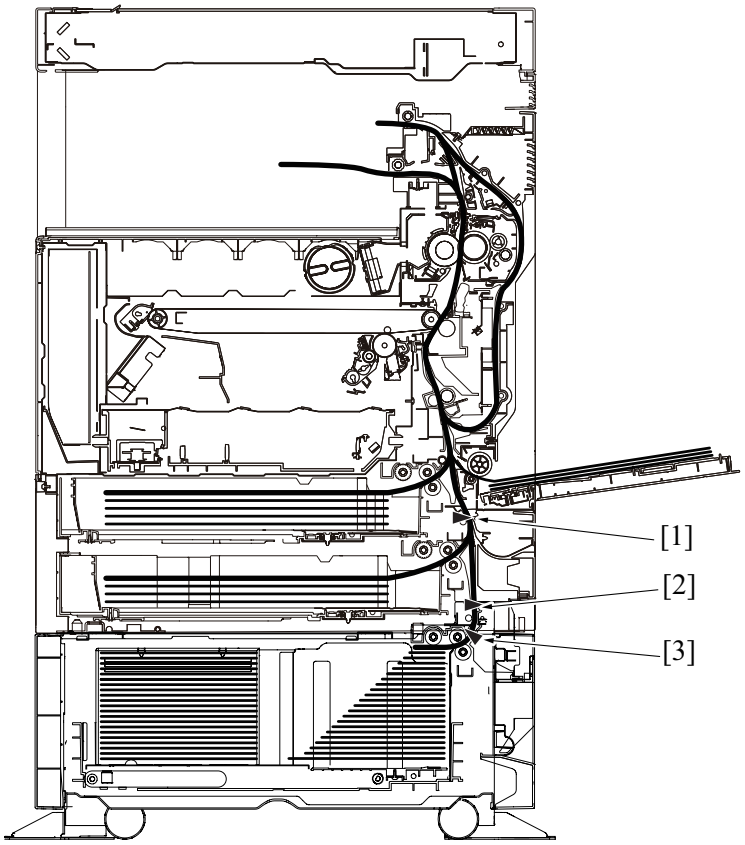

[1]	Tray 2 vertical transport sensor (PS19)	[2]	Vertical transport sensor (PS133)
[3]	Paper feed sensor (PS132)	-	-

1.3.6 FS-533/PK-519

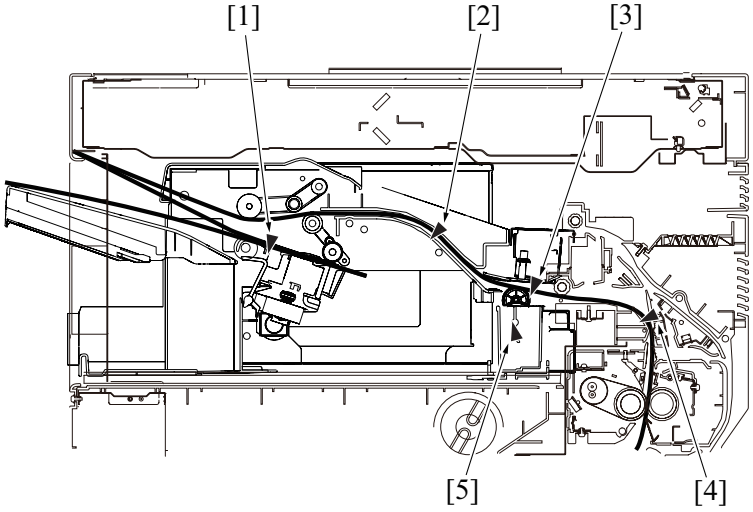

[1]	Paper surface detect sensor/1 (PS102)	[2]	Paper feed sensor (PS101)
[3]	Paper feed sensor (PS201)	[4]	Punch motor sensor (PS202)
[5]	Stapler home sensor (PS110)	-	-

1.3.7 FS-534/PK-520/SD-511

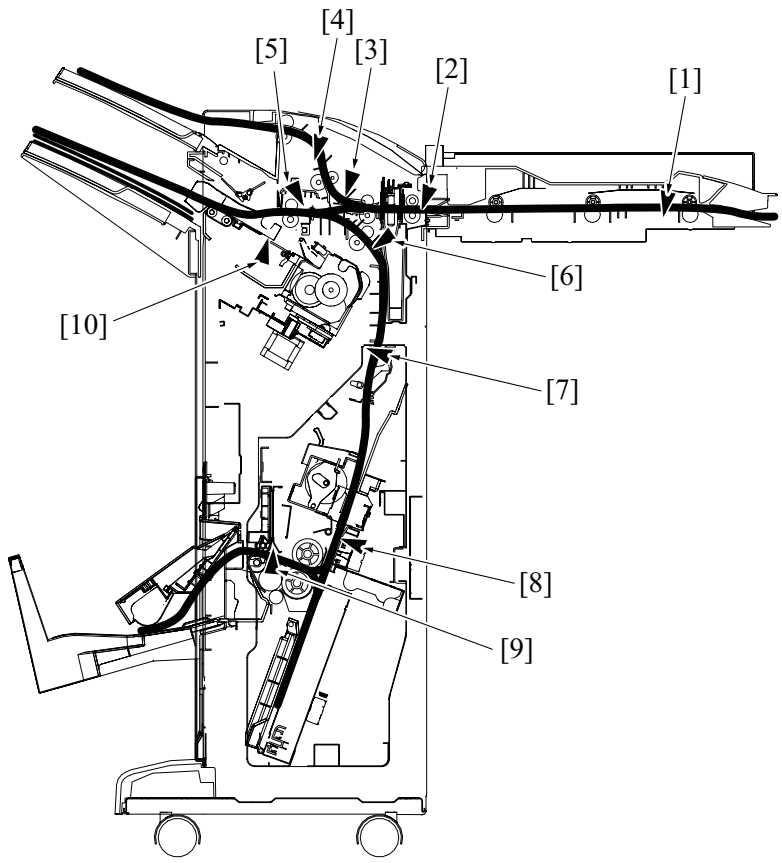

[1]	RU entrance sensor (PS2)	[2]	FNS entrance sensor (PS4)
[3]	Punch position sensor (PS2)	[4]	Sub tray exit sensor (PS8)
[5]	Saddle exit sensor (PS5)	[6]	Staple stacker paper detection sensor (PS31)
[7]	Saddle entrance sensor (PS1)	[8]	Center staple/fold stacker paper detect sensor (PS3)
[9]	Fold exit sensor (PS12)	[10]	Maintray exit sensor (PS16)

1.4 Initial check items

- When a paper misfeed occurs, first perform the following initial check items.

Check item	Action
Does paper meet product specifications?	Replace paper.
Is the paper curled, wavy, or damp?	Replace paper. Instruct user on proper paper storage.
Is a foreign object present along the paper path, or is the paper path deformed or worn?	Clean the paper path or replace the part on the paper path if necessary.
Are rolls/rollers dirty, deformed, or worn?	Clean the defective roll/roller. Replace the defective roll/roller.
Are the paper size and the detected paper size by the edge guide are matching?	Adjust the edge guide to match the paper size.
Are the actuators operating correctly?	Correct the defective actuator. Replace the defective actuator.

1.5 Jam when thin or thick paper is fed

1.5.1 Paper jam for thin paper

If paper jams occur while feeding thin paper (52 g/m^2 (13 $^{13}/_{16}$ lb)) from the tray 1 or the tray 2, adjust the paper pick-up pressure of the tray 1 or the tray 2 to apply the pick-up pressure for thin paper to the tray. However, if the pick-up pressure is changed to the one for thin paper, jam may occur especially when thick paper is used.

I.16.2.2 Pick-up pressure adjustment of the tray 1/2

1.5.2 Paper jam for thick paper

If paper jams occur while feeding thick paper from the manual bypass, adjust the separator roller pressure of the manual bypass to apply the separator roller pressure for thick paper to the tray. However, if the separator roller pressure is changed to the one for thick paper, jam may occur especially when thin paper is used.
I.16.2.3 Separator roller pressure adjustment of the bypass tray

1.6 1#-##

1.6.1 10-01, 10-02, 10-40

(1) Contents

JAM type	Misfeed at manual bypass feed section	
JAM code	10-01, 10-02, 10-40	
Detection timing	10-01	The leading edge of the paper does not unblocked the registration sensor (PS1) even after the lapse of a given period of time after the manual bypass starts to feed paper.
	10-02	For paper fed from the manual bypass, loop forming has not been complete before a sheet enters the registration roller because the rise timing of load to perform registration is earlier than the rise timing of load to form a loop.
	10-40	For paper fed from the manual bypass, the image write start signal permit continues to be disabled for a predetermined period of time after the timing of the image write start signal output.
	-	In case paper position is detected as locating properly after main power switch is turned ON, door and cover are opened / closed or jam/trouble reset is done, it is regarded as paper jam at manual bypass feed section.
Misfeed processing location	Right door	
Relevant parts	• Transport motor (M1) • Registration clutch (CL4) • Bypass paper feed clutch (CL7) • Bypass pick-up solenoid (SD1) • Registration sensor (PS1) • Front side board (FRB) • Printer control board (PRCB)	

(2) Procedure

Step	Action	Control signal	Location of electrical component
1	Initial check items	-	-
2	PS1 I/O check, sensor check	FRB CN8-3 (ON)	4 to 5-L
3	CL4 operation check	FRB CN8-7 (CL4_24V)	4-L
4	CL7 operation check	PRCB CN27-8 (ON)	3-C
5	SD1 operation check	PRCB CN27-10 (ON)	4-C
6	M1 operation check	PRCB CN31-2 (REM) PRCB CN31-5 (LOCK)	bizhub 364e 21-J bizhub 284e 23-J bizhub 224e 24-J
7	PRCB ICP5 conduction check	-	-
8	Replace FRB	-	-
9	Replace PRCB	-	-

- Link to the wiring diagram (N.1. bizhub 364e/284e/224e)

1.6.2 11-01, 11-02, 11-40

(1) Contents

JAM type	Misfeed at tray 1 feed section	
JAM code	11-01, 11-02, 11-40	
Detection timing	11-01	The leading edge of the paper does not unblocked the registration sensor (PS1) even after the lapse of a given period of time after the tray 1 starts to feed paper.
	11-02	For paper fed from the tray1, due to a delay in paper arrival, loop forming in front of the registration roller is not complete before the rise timing of the transport motor (M1).
	11-40	For paper fed from the tray1, the image write start signal permit continues to be disabled for a predetermined period of time after the timing of the image write start signal output.
	-	Tray 1 paper feed sensor (PS23) is turned ON when the main power switch is turned ON, a door or cover is opened and closed, or a misfeed or malfunction is reset.
	-	In case paper position is detected as locating properly after main power switch is turned ON, door and cover are opened / closed or jam/trouble reset is done, it is regarded as paper jam at tray 1 feed section.
Misfeed processing location	• Right door • Tray 1	

Relevant parts	• Transport motor (M1) • Tray 1 paper feed clutch (CL3) • Registration clutch (CL4) • Registration sensor (PS1) • Tray 1 paper feed sensor (PS23) • Front side board (FRB) • Printer control board (PRCB)

(2) Procedure

Step	Action	Control signal	Location of electrical component
1	Initial check items	-	-
2	PS1 I/O check, sensor check	FRB CN8-3 (ON)	4 to 5-L
3	PS23 I/O check, sensor check	PRCB CN26-10 (ON)	8-C
4	CL3 operation check	PRCB CN26-8 (ON)	8-C
5	CL4 operation check	FRB CN8-7 (CL4_24V)	4-L
6	M1 operation check	PRCB CN31-2 (REM) PRCB CN31-5 (LOCK)	bizhub 364e 21-J bizhub 284e 23-J bizhub 224e 24-J
7	PRCB ICP5 conduction check	-	-
8	Replace FRB	-	-
9	Replace PRCB	-	-

- Link to the wiring diagram (N.1. bizhub 364e/284e/224e)

1.6.3 12-01, 12-40

(1) Contents

JAM type	Misfeed at tray 2 feed section	
JAM code	12-01, 12-40	
Detection timing	12-01	The leading edge of the paper does not turn ON the tray 2 vertical transport sensor (PS19) even after the lapse of a given period of time after the tray 2 starts to feed paper.
	12-40	For paper fed from the tray 2, the image write start signal permit continues to be disabled for a predetermined period of time after the timing of the image write start signal output.
	-	Tray 2 vertical transport sensor (PS19) is turned ON when the main power switch is turned ON, a door or cover is opened and closed, or a misfeed or malfunction is reset.
	-	Tray 2 paper feed sensor (PS20) is turned ON when the main power switch is turned ON, a door or cover is opened and closed, or a misfeed or malfunction is reset.
	-	In case paper position is detected as locating properly after main power switch is turned ON, door and cover are opened / closed or jam/trouble reset is done, it is regarded as paper jam at tray 2 feed section.
Misfeed processing location	• Right door • Tray 2	
Relevant parts	• Transport motor (M1) • Tray 2 paper feed clutch (CL1) • Tray 2 vertical transport clutch (CL2) • Tray 2 vertical transport sensor (PS19) • Tray 2 paper feed sensor (PS20) • Printer control board (PRCB)	

(2) Procedure

Step	Action	Control signal	Location of electrical component
1	Initial check items	-	-
2	PS19 I/O check, sensor check	PRCB CN19-2 (ON)	8-C
3	PS20 I/O check, sensor check	PRCB CN19-15 (ON)	10-C
4	CL1 operation check	PRCB CN19-11 (ON)	9-C
5	CL2 operation check	PRCB CN19-13 (ON)	10-C
6	M1 operation check	PRCB CN31-2 (REM) PRCB CN31-5 (LOCK)	bizhub 364e 21-J bizhub 284e 23-J bizhub 224e 24-J
7	PRCB ICP4 conduction check	-	-
8	Replace PRCB	-	-

- Link to the wiring diagram (N.1. bizhub 364e/284e/224e)

1.6.4 13-01, 13-40

(1) Contents

JAM type	Misfeed at tray 3 feed section
JAM code	13-01, 13-40

Detection timing	13-01	The leading edge of the paper does not turn ON the tray 3 vertical transport sensor (PS113) even after the lapse of a given period of time after the tray 3 starts to feed paper.
	13-40	For paper fed from the tray 3, the image write start signal permit continues to be disabled for a predetermined period of time after the timing of the image write start signal output.
	-	Tray 3 vertical transport sensor (PS113) is turned ON when the main power switch is turned ON, a door or cover is opened and closed, or a misfeed or malfunction is reset.
	-	Tray 3 paper feed sensor (PS112) is turned ON when the main power switch is turned ON, a door or cover is opened and closed, or a misfeed or malfunction is reset.
	-	In case paper position is detected as locating properly after main power switch is turned ON, door and cover are opened / closed or jam/trouble reset is done, it is regarded as paper jam at tray 3 feed section.
Misfeed processing location	• Right door • Tray 3	
Relevant parts	• Tray 3 paper feed motor (M111) • Tray 3 vertical transport motor (M112) • Tray 3 paper feed sensor (PS112) • Tray 3 vertical transport sensor (PS113) • PC Control board (PCCB)	

(2) Procedure

Step	Action	Control signal	Location of electrical component
1	Initial check items	-	-
2	PS112 I/O check, sensor check	PCCB CN4-11 (ON)	PC-110/PC-210 5 to 6-C
3	PS113 I/O check, sensor check	PCCB CN4-14 (ON)	PC-110/PC-210 5-C
4	M111 operation check	PCCB CN5-1 to 8	PC-110/PC-210 4-C
5	M112 operation check	PCCB CN5-9 to 16	PC-110/PC-210 3 to 4-C
6	Change PCCB	-	-

- Link to the wiring diagram (N.2.3 PC-110)
- Link to the wiring diagram (N.2.4 PC-210)

1.6.5 14-01, 14-40

(1) Contents

JAM type	Misfeed at tray 4 feed section	
JAM code	14-01, 14-40	
Detection timing	14-01	The leading edge of the paper does not turn ON the tray 4 vertical transport sensor (PS123) even after the lapse of a given period of time after the tray 4 starts to feed paper.
	14-40	For paper fed from the tray 4, the image write start signal permit continues to be disabled for a predetermined period of time after the timing of the image write start signal output.
	-	Tray 4 vertical transport sensor (PS123) is turned ON when the main power switch is turned ON, a door or cover is opened and closed, or a misfeed or malfunction is reset.
	-	Tray 4 paper feed sensor (PS122) is turned ON when the main power switch is turned ON, a door or cover is opened and closed, or a misfeed or malfunction is reset.
	-	In case paper position is detected as locating properly after main power switch is turned ON, door and cover are opened / closed or jam/trouble reset is done, it is regarded as paper jam at tray 4 feed section.
Misfeed processing location	• Right door • Tray 4	
Relevant parts	• Tray 4 paper feed motor (M121) • Tray 4 vertical transport motor (M122) • Tray 4 paper feed sensor (PS122) • Tray 4 vertical transport sensor (PS123) • PC Control board (PCCB)	

(2) Procedure

Step	Action	Control signal	Location of electrical component
1	Initial check items	-	-
2	PS122 I/O check, sensor check	PCCB CN18-2 (ON)	PC-210 7-K
3	PS123 I/O check, sensor check	PCCB CN18-5 (ON)	PC-210 7-K
4	M121 operation check	PCCB CN9-1 to 8	PC-210 6-K
5	M122 operation check	PCCB CN9-9 to 16	PC-210 6-K
6	Replace PCCB	-	-

- Link to the wiring diagram (N.2.4 PC-210)

1.6.6 16-01, 16-40

(1) Contents

JAM type	Misfeed at LCT feed/vertical transport section

JAM code	16-01, 16-40	
Detection timing	16-01	The leading edge of the paper does not turn ON the vertical transport sensor (PS133) even after the lapse of a given period of time after the LCT starts to feed paper.
	16-40	For paper fed from the LCT, the image write start signal permit continues to be disabled for a predetermined period of time after the timing of the image write start signal output.
	-	Paper feed sensor (PS132) is turned ON when the main power switch is turned ON, a door or cover is opened and closed, or a misfeed or malfunction is reset.
	-	Vertical transport sensor (PS133) is turned ON when the main power switch is turned ON, a door or cover is opened and closed, or a misfeed or malfunction is reset.
	-	In case paper position is detected as locating properly after main power switch is turned ON, door and cover are opened / closed or jam/trouble reset is done, it is regarded as paper jam at LCT feed section or LCT vertical transport section.
Misfeed processing location	Right door	
Relevant parts	• Paper feed motor (M131) • Vertical transport motor (M132) • Paper feed sensor (PS132) • Vertical transport sensor (PS133) • PC Control board (PCCB)	

(2) Procedure

Step	Action	Control signal	Location of electrical component
1	Initial check items	-	-
2	PS132 I/O check, sensor check	PCCB CN4-11 (ON)	PC-410 7-J
3	PS133 I/O check, sensor check	PCCB CN4-14 (ON)	PC-410 7-J
4	M131 operation check	PCCB CN5-1 to 8	PC-410 5-J
5	M132 operation check	PCCB CN5-9 to 16	PC-410 4-J
6	Replace PCCB	-	-

- Link to the wiring diagram (N.2.5 PC-410)

1.7 2#-##

1.7.1 20-01, 20-02

(1) Contents

JAM type	Misfeed at vertical transport section	
JAM code	20-01, 20-02	
Detection timing	20-01	The registration sensor (PS1) is not unblocked even after the lapse of a given period of time after the paper has turned ON the tray 2 vertical transport sensor (PS19).
	20-02	For paper fed from the tray 2, tray 3, tray 4 or LCT, loop forming has not been complete before a sheet enters the registration roller because the rise timing of load to perform registration is earlier than the rise timing of load to form a loop.
Misfeed processing location	Right door	
Relevant parts	• Transport motor (M1) • Tray 2 vertical transport clutch (CL2) • Registration clutch (CL4) • Registration sensor (PS1) • Tray 2 vertical transport sensor (PS19) • Front side board (FRB) • Printer control board (PRCB)	

(2) Procedure

Step	Action	Control signal	Location of electrical component
1	Initial check items	-	-
2	PS1 I/O check, sensor check	FRB CN8-3 (ON)	4 to 5-L
3	PS19 I/O check, sensor check	PRCB CN19-2 (ON)	8-C
4	CL2 operation check	PRCB CN19-13 (ON)	10-C
5	CL4 operation check	FRB CN8-7 (CL4_24V)	4-L
6	M1 operation check	PRCB CN31-2 (REM) PRCB CN31-5 (LOCK)	bizhub 364e 21-J bizhub 284e 23-J bizhub 224e 24-J
7	Replace FRB	-	-
8	Replace PRCB	-	-

- Link to the wiring diagram (N.1. bizhub 364e/284e/224e)

1.7.2 20-21

(1) Contents

JAM type	Misfeed at vertical transport section (tray 3)		
JAM code	20-21		
Detection timing	20-21	<When PC-110 or PC-210 is installed>	The tray 2 vertical transport sensor (PS19) is not turned ON even after the lapse of a given period of time after the tray 3 vertical transport sensor (PS113) has been blocked by a paper.
		<When PC-410 is installed>	The tray 2 vertical transport sensor (PS19) is not turned ON even after the lapse of a given period of time after the vertical transport sensor (PS133) has been blocked by a paper.
	-	In case paper position is detected as locating properly after main power switch is turned ON, door and cover are opened /closed or jam/trouble reset is done, it is regarded as paper jam at vertical transport section.	
Misfeed processing location	Right door		
Relevant parts	<When PC-110 or PC-210 is installed>	• Transport motor (M1) • Tray 3 vertical transport motor (M112) • Tray 2 vertical transport clutch (CL2) • Tray 2 vertical transport sensor (PS19) • Tray 3 vertical transport sensor (PS113) • Printer control board (PRCB) • PC control board (PCCB)	
	<When PC-410 is installed>	• Transport motor (M1) • Vertical transport motor (M132) • Tray 2 vertical transport clutch (CL2) • Tray 2 vertical transport sensor (PS19) • Vertical transport sensor (PS133) • Printer control board (PRCB) • PC control board (PCCB)	

(2) Procedure

When PC-110 or PC-210 is installed

Step	Action	Control signal	Location of electrical component
1	Initial check items	-	-
2	PS113 I/O check, sensor check	PCCB CN4-14 (ON)	PC-110/PC-210 5-C
3	PS19 I/O check, sensor check	PRCB CN19-2 (ON)	8-C
4	CL2 operation check	PRCB CN19-13 (ON)	10-C
5	M112 operation check	PCCB CN5-9 to 16	PC-110/PC-210 3 to 4-C
6	M1 operation check	PRCB CN31-2 (REM) PRCB CN31-5 (LOCK)	bizhub 364e 21-J bizhub 284e 23-J bizhub 224e 24-J
7	Replace PRCB	-	-
8	Replace PCCB	-	-

- Link to the wiring diagram (N.1. bizhub 364e/284e/224e)
- Link to the wiring diagram (N.2.3 PC-110)
- Link to the wiring diagram (N.2.4 PC-210)

When PC-410 is installed

Step	Action	Control signal	Location of electrical component
1	Initial check items	-	-
2	PS133 I/O check, sensor check	PCCB CN4-14 (ON)	PC-410 7-J
3	PS19 I/O check, sensor check	PRCB CN19-2 (ON)	8-C
4	CL2 operation check	PRCB CN19-13 (ON)	10-C
5	M132 operation check	PCCB CN5-9 to 16	PC-410 4-J
6	M1 operation check	PRCB CN31-2 (REM) PRCB CN31-5 (LOCK)	bizhub 364e 21-J bizhub 284e 23-J bizhub 224e 24-J
7	Replace PRCB	-	-
8	Replace PCCB	-	-

- Link to the wiring diagram (N.1. bizhub 364e/284e/224e)
- Link to the wiring diagram (N.2.5 PC-410)

1.7.3 20-22

(1) Contents

JAM type	Misfeed at vertical transport section (tray 4)
JAM code	20-22

Detection timing	20-22	The tray 3 vertical transport sensor (PS113) is not blocked even after the lapse of a given period of time after the tray 4 vertical transport sensor (PS123) has been blocked by a paper.
	-	In case paper position is detected as locating properly after main power switch is turned ON, door and cover are opened /closed or jam/trouble reset is done, it is regarded as paper jam at vertical transport section.
Misfeed processing location	Right door	
Relevant parts	• Tray 3 vertical transport motor (M112) • Tray 4 vertical transport motor (M122) • Tray 3 vertical transport sensor (PS113) • Tray 4 vertical transport sensor (PS123) • PC control board (PCCB)	

(2) Procedure

Step	Action	Control signal	Location of electrical component
1	Initial check items	-	-
2	PS123 I/O check, sensor check	PCCB CN18-5 (ON)	PC-210 7-K
3	PS113 I/O check, sensor check	PCCB CN4-14 (ON)	PC-210 5-C
4	M122 operation check	PCCB CN9-9 to 16	PC-210 6-K
5	M112 operation check	PCCB CN5-9 to 16	PC-210 3 to 4-C
6	Replace PCCB	-	-

- Link to the wiring diagram (N.2.4 PC-210)

1.8 3#-##

1.8.1 30-03

(1) Contents

JAM type	Misfeed at 2nd image transfer section	
JAM code	30-03	
Detection timing	30-03	The leading edge of paper does not block the paper exit sensor (PS3) since the paper feeding is started.
	-	The registration sensor (PS1) is unblocked when the main power switch is turned ON, a door or cover is opened and closed, or a misfeed or malfunction is reset.
	-	The paper exit sensor (PS3) is unblocked when the main power switch is turned ON, a door or cover is opened and closed, or a misfeed or malfunction is reset.
	-	In case paper position is detected as locating properly after main power switch is turned ON, door and cover are opened / closed or jam/trouble reset is done, it is regarded as paper jam at image transfer section.
Misfeed processing location	Right door	
Relevant parts	• Transport motor (M1) • Registration clutch (CL4) • Paper exit clutch (CL8) • Registration sensor (PS1) • Paper exit sensor (PS3) • Front side board (FRB) • Printer control board (PRCB)	

(2) Procedure

Step	Action	Control signal	Location of electrical component
1	Initial check items	-	-
2	PS1 I/O check, sensor check	FRB CN8-3 (ON)	4 to 5-L
3	PS3 I/O check, sensor check	PRCB CN21-7 (ON)	18-C
4	CL4 operation check	FRB CN8-7 (CL4_24V)	4-L
5	CL8 operation check	PRCB CN13-16 (ON)	22-C
6	M1 operation check	PRCB CN31-2 (REM) PRCB CN31-5 (LOCK)	bizhub 364e 21-J bizhub 284e 23-J bizhub 224e 24-J
7	Replace FRB	-	-
8	Replace PRCB	-	-

- Link to the wiring diagram (N.1. bizhub 364e/284e/224e)

1.8.2 32-01, 32-05

(1) Contents

JAM type	Misfeed at exit section

JAM code	32-01, 32-05	
Detection timing	32-01	The ADU paper passage sensor/1 (PS40) is not blocked even after the lapse of a given period of time after the reverse sequence is started.
	32-05	The paper exit sensor (PS3) is not unblocked even after the lapse of a given period of time after the paper has blocked PS3.
	-	The paper exit sensor (PS3) is blocked when the main power switch is unblocked, a door or cover is opened and closed, or a misfeed or malfunction is reset.
	-	In case paper position is detected as locating properly after main power switch is turned ON, door and cover are opened / closed or jam/trouble reset is done, it is regarded as paper jam at exit section.
Misfeed processing location	Right door	
Relevant parts	• Fusing motor (M3) • Reverse motor (M4) • ADU transport motor (M5) • Paper exit clutch (CL8) • Paper exit sensor (PS3) • ADU paper passage sensor/1 (PS40) • Front side board (FRB) • Printer control board (PRCB)	

(2) Procedure

Step	Action	Control signal	Location of electrical component
1	Initial check items	-	-
2	PS3 I/O check, sensor check	PRCB CN21-7 (ON)	18-C
3	PS40 I/O check, sensor check	PRCB CN21-10 (ON)	18-C
4	CL8 operation check	PRCB CN13-16 (ON)	22-C
5	M3 operation check	PRCB CN2-9 (REM) PRCB CN2-12 (LOCK)	26-I to J
6	M4 operation check	PRCB CN12-4 to 7	25-C
7	M5 operation check	PRCB CN21-1 to 4	17 to 18-C
8	Replace FRB	-	-
9	Replace PRCB	-	-

- Link to the wiring diagram (N.1. bizhub 364e/284e/224e)

1.9 6#-##

1.9.1 66-01, 66-11, 66-21

(1) Contents

JAM type	DF turnover section		
JAM code	66-01, 66-11, 66-21		
Detection timing	66-01	<When DF-624 is installed>	The document registration sensor (PS3) is not unblocked by the paper even after the set period of time has elapsed after the reverse registration operation started.
	66-11	<When DF-624 is installed>	The document registration (PS3) is not turned ON after the set period of time after PS3 is unblocked after the switchback registration started.
	66-21	<When DF-624 is installed>	The document reading sensor (PS4) is not turned ON after a lapse of a given time after the document registration sensor (PS3) is unblocked.
Misfeed processing location	• Left cover • Re-feeding opening		
Relevant parts	• Document reading motor (M1) • Registration motor (M3) • Document registration sensor (PS3) • Document reading sensor (PS4) • DF control board (DFCB)		

(2) Procedure

Step	Action	Control signal	Location of electrical component
1	Initial check items	-	-
2	PS4 I/O check, sensor check	DFCB J10-3 (ON)	DF-624 2-G
3	PS3 I/O check, sensor check	DFCB J14-12 (ON)	DF-624 5-G
4	M1 operation check	DFCB J7-1 to 4	DF-624 2-B
5	M3 operation check	DFCB J6-1 to 4	DF-624 3-B
6	DFCB F6 conduction check	-	-

Step	Action	Control signal	Location of electrical component
7	Replace DFCB	-	-

- Link to the wiring diagram (N.2.2 DF-624)

1.9.2 66-02, 66-12

(1) Contents

JAM type	DF paper feed section		
JAM code	66-02, 66-12		
Detection timing	66-02	<When DF-624 or DF-701 is installed>	The after separate sensor (PS2) is not blocked after a lapse of a given time after the document feed motor (M2) is turned ON.
	66-12	<When DF-624 or DF-701 is installed>	The size of the original on the tray detected by DF does not match the size of the original detected by the main body.
Misfeed processing location	Left cover		
Relevant parts	<When DF-624 is installed>		• Document feed motor (M2) • After Separate sensor (PS2) • Document length size sensor/1 (PS6) • Document length size sensor/2 (PS7) • DF control board (DFCB)
	<When DF-701 is installed>		• Document feed motor (M2) • After separate sensor (PS2) • Document length sensor/1 (PS8) • Document length sensor/2 (PS9) • DF control board (DFCB)

(2) Procedure

When DF-624 is installed

Step	Action	Control signal	Location of electrical component
1	Initial check items	-	-
2	PS2 I/O check, sensor check	DFCB J14-8 (ON)	DF-624 6-G
3	PS6 I/O check, sensor check	DFCB J12-6 (ON)	DF-624 4-G
4	PS7 I/O check, sensor check	DFCB J12-5 (ON)	DF-624 4-G
5	M2 operation check	DFCB J5-1 to 4	DF-624 2-B
6	DFCB F3 conduction check	-	-
7	Replace DFCB	-	-

- Link to the wiring diagram (N.2.2 DF-624)

When DF-701 is installed

Step	Action	Control signal	Location of electrical component
1	Initial check items	-	-
2	PS2 I/O check, sensor check	DFCB J14-8 (ON)	DF-701 6-G
3	PS8 I/O check, sensor check	DFCB J12-6 (ON)	DF-701 3 to 4-G
4	PS9 I/O check, sensor check	DFCB J12-5 (ON)	DF-701 3-G
5	M2 operation check	DFCB J5-1 to 4	DF-701 1 to 2-B
6	DFCB F3 conduction check	-	-
7	Replace DFCB	-	-

- Link to the wiring diagram (N.2.1 DF-701)

1.9.3 66-03, 66-13, 66-23, 66-33

(1) Contents

JAM type	DF transport section		
JAM code	66-03, 66-13, 66-23, 66-33		
Detection timing	66-03	<When DF-624 or DF-701 is installed>	The after separate sensor (PS2) is not unblocked after a lapse of a given time after PS2 is blocked.
	66-13	<When DF-624 is installed>	The document registration sensor (PS3) is not unblocked after a lapse of a given time after the after separate sensor (PS2) is blocked.
		<When DF-701 is installed>	The registration sensor (PS3) is not unblocked after a lapse of a given time after the after separate sensor (PS2) is blocked.
	66-23	<When DF-624 is installed>	The document registration sensor (PS3) is not blocked after a lapse of given time after PS3 is unblocked.
		<When DF-701 is installed>	The registration sensor (PS3) is not blocked after a lapse of given time after PS3 is unblocked.

	66-33	<When DF-624 is installed>	The document reading sensor (PS4) is not blocked after a lapse of a given time after the document registration sensor (PS3) is unblocked.
		<When DF-701 is installed>	The document reading sensor (PS6) is not blocked after a lapse of a given time after the registration sensor (PS3) is unblocked.
Misfeed processing location	Left cover		
Relevant parts	<When DF-624 is installed>		• Document reading motor (M1) • Document feed motor (M2) • Registration motor (M3) • After separate sensor (PS2) • Document registration sensor (PS3) • Document reading sensor (PS4) • DF control board (DFCB)
	<When DF-701 is installed>		• Document reading motor (M1) • Document feed motor (M2) • Registration motor (M3) • After separate sensor (PS2) • Registration sensor (PS3) • Document reading sensor (PS6) • DF control board (DFCB)

(2) Procedure

When DF-624 is installed

Step	Action	Control signal	Location of electrical component
1	Initial check items	-	-
2	PS2 I/O check, sensor check	DFCB J14-8 (ON)	DF-624 6-G
3	PS3 I/O check, sensor check	DFCB J14-12 (ON)	DF-624 5-G
4	PS4 I/O check, sensor check	DFCB J10-3 (ON)	DF-624 2-G
5	M1 operation check	DFCB J7-1 to 4	DF-624 2-B
6	M2 operation check	DFCB J5-1 to 4	DF-624 2-B
7	M3 operation check	DFCB J6-1 to 4	DF-624 3-B
8	DFCB F4, F5 conduction check	-	-
9	Replace DFCB	-	-

- Link to the wiring diagram (N.2.2 DF-624)

When DF-701 is installed

Step	Action	Control signal	Location of electrical component
1	Initial check items	-	-
2	PS2 I/O check, sensor check	DFCB J14-8 (ON)	DF-701 6-G
3	PS3 I/O check, sensor check	DFCB J14-12 (ON)	DF-701 4-G
4	PS6 I/O check, sensor check	DFCB J10-3 (ON)	DF-701 2-G
5	M1 operation check	DFCB J7-1 to 4	DF-701 1-B
6	M2 operation check	DFCB J5-1 to 4	DF-701 1 to 2-B
7	M3 operation check	DFCB J6-1 to 4	DF-701 2-B
8	DFCB F4, F5 conduction check	-	-
9	Replace DFCB	-	-

- Link to the wiring diagram (N.2.1 DF-701)

1.9.4 66-04, 66-14, 66-24, 66-34

(1) Contents

JAM type	DF paper exit section		
JAM code	66-04, 66-14, 66-24, 66-34		
Detection timing	66-04	<When DF-624 is installed>	The document exit sensor (PS5) is not unblocked after a lapse of a given time after the document reading sensor (PS4) is turned ON.
		<When DF-701 is installed>	The document exit sensor (PS5) is not unblocked after a lapse of a given time after the document reading sensor (PS6) is turned ON.
	66-14	<When DF-624 is installed>	The document exit sensor (PS5) is not blocked after a lapse of a given time after the document reading sensor (PS4) is turned OFF.
		<When DF-701 is installed>	The document exit sensor (PS5) is not blocked after a lapse of a given time after the document reading sensor (PS6) is turned OFF.
	66-24	<When DF-624 is installed>	The document exit sensor (PS5) is not unblocked after a lapse of a given time after the document reading sensor (PS4) is turned OFF.
	66-34	<When DF-624 is installed>	The document exit sensor (PS5) is not blocked after the laps of give time after the document reading sensor (PS4) turned OFF after the switchback exit operation started.

Misfeed processing location	• Left cover • Opening and closing guide	
Relevant parts	<When DF-624 is installed>	• Document reading motor (M1) • Document reading sensor (PS4) • Document exit sensor (PS5) • DF control board (DFCB)
	<When DF-701 is installed>	• Document reading motor (M1) • Document exit sensor (PS5) • Document reading sensor (PS6) • DF control board (DFCB)

(2) Procedure

When DF-624 is installed

Step	Action	Control signal	Location of electrical component
1	Initial check items	-	-
2	PS4 I/O check, sensor check	DFCB J10-3 (ON)	DF-624 2-G
3	PS5 I/O check, sensor check	DFCB J15-6 (ON)	DF-624 3-G
4	M1 operation check	DFCB J7-1 to 4	DF-624 2-B
5	Replace DFCB	-	-

- Link to the wiring diagram (N.2.2 DF-624)

When DF-701 is installed

Step	Action	Control signal	Location of electrical component
1	Initial check items	-	-
2	PS6 I/O check, sensor check	DFCB J10-3 (ON)	DF-701 2-G
3	PS5 I/O check, sensor check	DFCB J15-6 (ON)	DF-701 3-G
4	M1 operation check	DFCB J7-1 to 4	DF-701 1-B
5	Replace DFCB	-	-

- Link to the wiring diagram (N.2.1 DF-701)

1.9.5 66-05, 66-06, 66-15

(1) Contents

JAM type	DF image reading section		
JAM code	66-05, 66-06, 66-15		
Detection timing	66-05	<When DF-624 is installed>	The document reading sensor (PS4) is not turned OFF after a lapse of a given time after the document registration sensor (PS3) is blocked.
		<When DF-701 is installed>	The document reading sensor (PS6) is not turned OFF after a lapse of a given time after the registration sensor (PS3) is blocked.
	66-06	<When DF-624 is installed>	The document reading sensor (PS4) is turned ON earlier than a given time after PS4 is turned OFF during original transportation.
		<When DF-701 is installed>	The document reading sensor (PS6) is turned ON earlier than a given time after PS6 is turned OFF during original transportation.
	66-15	<When DF-624 is installed>	The document reading sensor (PS4) does not turn OFF after the laps of given time after the document registration sensor (PS3) is blocked after the switchback read operation started.
Misfeed processing location	Left cover		
Relevant parts	<When DF-624 is installed>		• Document reading motor (M1) • Reading roll release motor (M5) • Document registration sensor (PS3) • Document reading sensor (PS4) • DF control board (DFCB)
	<When DF-701 is installed>		• Document reading motor (M1) • Reading roller release motor (M4) • Registration sensor (PS3) • Document reading sensor (PS6) • DF control board (DFCB)

(2) Procedure

When DF-624 is installed

Step	Action	Control signal	Location of electrical component
1	Initial check items	-	-
2	Make the adjustment of original stop position.	-	-
3	PS3 I/O check, sensor check	DFCB J14-12 (ON)	DF-624 5-G
4	PS4 I/O check, sensor check	DFCB J10-3 (ON)	DF-624 2-G

Step	Action	Control signal	Location of electrical component
5	M1 operation check	DFCB J7-1 to 4	DF-624 2-B
6	M5 operation check	DFCB J18-4 to 5	DF-624 2-G
7	Replace DFCB	-	-

- Link to the wiring diagram (N.2.2 DF-624)

When DF-701 is installed

Step	Action	Control signal	Location of electrical component
1	Initial check items	-	-
2	Make the adjustment of original stop position.	-	-
3	PS3 I/O check, sensor check	DFCB J14-12 (ON)	DF-701 4-G
4	PS6 I/O check, sensor check	DFCB J10-3 (ON)	DF-701 2-G
5	M1 operation check	DFCB J7-1 to 4	DF-701 1-B
6	M4 operation check	DFCB J18-4 to 5	DF-701 1-G
7	Replace DFCB	-	-

- Link to the wiring diagram (N.2.1 DF-701)

1.9.6 66-07

(1) Contents

JAM type	DF paper feed/transport/image reading/turnover/paper exit section		
JAM code	66-07		
Detection timing	66-07	<When DF-624 or DF-701 is installed>	Due to a remaining sheet of paper that has not been detected by sensors, before the start of a job, a sensor detects the sheet at an unexpected timing.
Misfeed processing location	Left cover		
Relevant parts	<When DF-624 is installed>		• Document registration sensor (PS3) • Document reading sensor (PS4) • DF control board (DFCB)
	<When DF-701 is installed>		• Registration sensor (PS3) • Document reading sensor (PS6) • DF control board (DFCB)

(2) Procedure

When DF-624 is installed

Step	Action	Control signal	Location of electrical component
1	Initial check items	-	-
2	Make the adjustment of original stop position.	-	-
3	PS3 I/O check, sensor check	DFCB J14-12 (ON)	DF-624 5-G
4	PS4 I/O check, sensor check	DFCB J10-3 (ON)	DF-624 2-G
5	DFCB F3, F4, F5, F6 conduction check	-	-
6	Replace DFCB	-	-

- Link to the wiring diagram (N.2.2 DF-624)

When DF-701 is installed

Step	Action	Control signal	Location of electrical component
1	Initial check items	-	-
2	Make the adjustment of original stop position.	-	-
3	PS3 I/O check, sensor check	DFCB J14-12 (ON)	DF-701 4-G
4	PS6 I/O check, sensor check	DFCB J10-3 (ON)	DF-701 2-G
5	DFCB F3, F4, F5 conduction check	-	-
6	Replace DFCB	-	-

- Link to the wiring diagram (N.2.1 DF-701)

1.10 7#-##

1.10.1 72-14

(1) Contents

JAM type	FS transport section		
JAM code	72-14		
Detection timing	72-14	<When FS-534 is installed>	The staple stacker paper detection sensor (PS31) is not turned ON even after the set period of time has elapsed after the saddle exit sensor (PS5) is turned ON by the paper.

Misfeed processing location	Front door
Relevant parts	• Saddle exit sensor (PS5) • Staple stacker paper detection sensor (PS31) • FS control board (FSCB)

(2) Procedure

Step	Action	Control signal	Location of electrical component
1	Initial check items	-	-
2	PS5 I/O check, sensor check	FSCB J5-2 (ON)	FS-534 10-K
3	PS31 I/O check, sensor check	FSCB J12-11 (ON)	FS-534 6-C
4	Replace FSCB	-	-

- Link to the wiring diagram (N.2.7 FS-534)

1.10.2 72-15

(1) Contents

JAM type	FS transport section		
JAM code	72-15		
Detection timing	72-15	<When FS-534 is installed>	The staple stacker paper detection sensor (PS31) is not turn OFF even after the set period of time has elapsed after it turns ON.
Misfeed processing location	Front door		
Relevant parts	• Staple stacker paper detection sensor (PS31) • FS control board (FSCB)		

(2) Procedure

Step	Action	Control signal	Location of electrical component
1	Initial check items	-	-
2	PS31 I/O check, sensor check	FSCB J12-11 (ON)	FS-534 6-C
3	Replace FSCB	-	-

- Link to the wiring diagram (N.2.7 FS-534)

1.10.3 72-16

(1) Contents

JAM type	FS transport section		
JAM code	72-16		
Detection timing	72-16	<When FS-533 is installed>	The paper feed sensor (PS101) is not turned ON even after the set period of time has elapsed after the main body's paper exit sensor (PS3) is unblocked by the paper.
		<When FS-533+PK-519 is installed>	The paper feed sensor (PS101) is not turned ON even after the set period of time has elapsed after the paper feed sensor (PS201) is turned ON by the paper.
		<When FS-534 is installed>	The FNS entrance sensor (PS4) is not turned ON even after the set period of time has elapsed after the RU entrance sensor (PS2) is blocked by the paper.
Misfeed processing location	• Finisher paper feed section (When FS-533 is installed) • Horizontal conveyance cover (When FS-534 is installed)		
Relevant parts	<When FS-533 is installed>		• Paper conveyance motor (M101) • Paper exit sensor (PS3) • Paper feed sensor (PS101) • FS control board (FSCB) • Printer control board (PRCB)
	<When FS-533+PK-519 is installed>		• Paper conveyance motor (M101) • Paper feed sensor (PS101) • Paper feed sensor (PS201) • FS control board (FSCB) • Printer control board (PRCB)
	<When FS-534 is installed>		• RU entrance sensor (PS2) • FNS entrance sensor (PS4) • FS control board (FSCB)

(2) Procedure

When FS-533 or FS-533+PK-519 is installed

Step	Action	Control signal	Location of electrical component
1	Initial check items	-	-
2	PS3 I/O check, sensor check	PRCB CN21-7 (ON)	bizhub 364e/284e/224e 18-C
3	PS101 I/O check, sensor check	FSCB CN111	FS-533 7-D to E
4	PS201 I/O check, sensor check	PKCB CN204	FS-533 (PK-519) 5-C
5	M101 operation check	FSCB CN101	FS-533 6-J
6	FSCB CP101 conduction check	-	-
7	Replace FSCB	-	-
8	Replace PRCB	-	-

- Link to the wiring diagram (N.1. bizhub 364e/284e/224e)
- Link to the wiring diagram (N.2.6 FS-533)

When FS-534 is installed

Step	Action	Control signal	Location of electrical component
1	Initial check items	-	-
2	PS2 I/O check, sensor check	FSCB J6-7 (ON)	FS-534 6-K
3	PS4 I/O check, sensor check	FSCB J7-13 (ON)	FS-534 8-K
4	Replace FSCB	-	-

- Link to the wiring diagram (N.2.7 FS-534)

1.10.4 72-17

(1) Contents

JAM type	FS transport section		
JAM code	72-17		
Detection timing	72-17	<When FS-533 is installed>	The paper feed sensor (PS101) is not turn OFF even after the set period of time has elapsed after it turns ON.
		<When FS-534 is installed>	The FNS entrance sensor (PS4) is not turned OFF even after the set period of time has elapsed after it is turned ON by the paper.
Misfeed processing location	• Finisher paper feed section (When FS-533 is installed) • Front door (When FS-534 is installed)		
Relevant parts	<When FS-533 is installed>		• Paper conveyance motor (M101) • Paper feed sensor (PS101) • FS control board (FSCB)
	<When FS-534 is installed>		• FNS entrance sensor (PS4) • FS control board (FSCB)

(2) Procedure

When FS-533 is installed

Step	Action	Control signal	Location of electrical component
1	Initial check items	-	-
2	PS101 I/O check, sensor check	FSCB CN111	FS-533 7-D to E
3	M101 operation check	FSCB CN101	FS-533 6-J
4	FSCB CP101 conduction check	-	-
5	Replace FSCB	-	-

- Link to the wiring diagram (N.2.6 FS-533)

When FS-534 is installed

Step	Action	Control signal	Location of electrical component
1	Initial check items	-	-
2	PS4 I/O check, sensor check	FSCB J7-13 (ON)	FS-534 8-K
3	Replace FSCB	-	-

- Link to the wiring diagram (N.2.7 FS-534)

1.10.5 72-18

(1) Contents

JAM type	FS transport section		
JAM code	72-18		
Detection timing	72-18	<When FS-534 is installed>	• The saddle exit sensor (PS5) is not turned ON even after the set period of time has elapsed after the FNS entrance sensor (PS4) is turned ON by the paper.

			• While the buffer is controlled, the saddle exit sensor (PS5) is not tuned ON even after the set period of time has elapsed after the reverse rotation drive is started.
Misfeed processing location	Front door		
Relevant parts	• FNS entrance sensor (PS4) • Saddle exit sensor (PS5) • FS control board (FSCB)		

(2) Procedure

Step	Action	Control signal	Location of electrical component
1	Initial check items	-	-
2	PS4 I/O check, sensor check	FSCB J7-13 (ON)	FS-534 8-K
3	PS5 I/O check, sensor check	FSCB J5-2 (ON)	FS-534 10-K
4	Replace FSCB	-	-

- Link to the wiring diagram (N.2.7 FS-534)

1.10.6 72-19

(1) Contents

JAM type	FS transport section		
JAM code	72-19		
Detection timing	72-19	<When FS-534 is installed>	The saddle exit sensor (PS5) is not turn OFF even after the set period of time has elapsed after it turns ON.
Misfeed processing location	Front door		
Relevant parts	• Saddle exit sensor (PS5) • FS control board (FSCB)		

(2) Procedure

Step	Action	Control signal	Location of electrical component
1	Initial check items	-	-
2	PS5 I/O check, sensor check	FSCB J5-2 (ON)	FS-534 10-K
3	Replace FSCB	-	-

- Link to the wiring diagram (N.2.7 FS-534)

1.10.7 72-21

(1) Contents

JAM type	FS transport section		
JAM code	72-21		
Detection timing	72-21	<When FS-533 is installed>	The paper surface detect sensor/1 (PS102) is not unblocked after the paper exit.
		<When FS-534 is installed>	The main tray exit sensor sensor (PS16) is not turn OFF even after the set period of time has elapsed after the start of exiting paper.
Misfeed processing location	• Finisher paper exit section (When FS-533 is installed) • Front door (When FS-534 is installed)		
Relevant parts	<When FS-533 is installed>		• Paper exit motor (M102) • Paper surface detect sensor/1 (PS102) • FS control board (FSCB)
	<When FS-534 is installed>		• Main tray exit sensor (PS16) • FS control board (FSCB)

(2) Procedure

When FS-533 is installed

Step	Action	Control signal	Location of electrical component
1	Initial check items	-	-
2	PS102 I/O check, sensor check	FSCB CN102	FS-533 6-J
3	M102 operation check	FSCB CN109	FS-533 8 to 9-D to E
4	FSCB CP102 conduction check	-	-
5	Replace FSCB	-	-

- Link to the wiring diagram (N.2.6 FS-533)

When FS-534 is installed

Step	Action	Control signal	Location of electrical component
1	Initial check items	-	-
2	PS16 I/O check, sensor check	FSCB J9<B>-2 (ON)	FS-534 9-C
3	Replace FSCB	-	-

- Link to the wiring diagram (N.2.7 FS-534)

1.10.8 72-22

(1) Contents

JAM type	FS transport section		
JAM code	72-22		
Detection timing	72-22	<When FS-534 is installed>	The sub tray exit sensor (PS8) is not blocked even after the set period of time has elapsed after the paper reaches the paper transport acceleration point.
Misfeed processing location	Front door		
Relevant parts	• Sub tray exit sensor (PS8) • FS control board (FSCB)		

(2) Procedure

Step	Action	Control signal	Location of electrical component
1	Initial check items	-	-
2	PS8 I/O check, sensor check	FSCB J9<B>-6 (ON)	FS-534 9-C
3	Replace FSCB	-	-

- Link to the wiring diagram (N.2.7 FS-534)

1.10.9 72-23

(1) Contents

JAM type	FS transport section		
JAM code	72-23		
Detection timing	72-23	<When FS-534 is installed>	The sub tray exit sensor (PS8) is not blocked even after the set period of time has elapsed after it unblocked.
Misfeed processing location	Front door		
Relevant parts	• Sub tray exit sensor (PS8) • FS control board (FSCB)		

(2) Procedure

Step	Action	Control signal	Location of electrical component
1	Initial check items	-	-
2	PS8 I/O check, sensor check	FSCB J9<B>-6 (ON)	FS-534 9-C
3	Replace FSCB	-	-

- Link to the wiring diagram (N.2.7 FS-534)

1.10.10 72-25

(1) Contents

JAM type	SD paper exit section		
JAM code	72-25		
Detection timing	72-25	<When FS-534+SD-511 is installed>	The fold exit sensor (PS12) is not turned ON by the paper even after the set period of time has elapsed after the half-fold exit operation started.
Misfeed processing location	• Front door • Stacker unit		
Relevant parts	• Fold exit sensor (PS12) • SD drive board (SDDB) • FS control board (FSCB)		

(2) Procedure

Step	Action	Control signal	Location of electrical component
1	Initial check items	-	-
2	PS12 I/O check, sensor check	SDDB J9-2 (ON)	SD-511 5-G
3	Replace SDDB	-	-

Step	Action	Control signal	Location of electrical component
4	Replace FSCB	-	-

- Link to the wiring diagram (N.2.8 SD-511)

1.10.11 72-26

(1) Contents

JAM type	SD paper exit section		
JAM code	72-26		
Detection timing	72-26	<When FS-534+SD-511 is installed>	The fold exit sensor (PS12) is not turned OFF even after the set period of time has elapsed after it is turned ON by the paper.
Misfeed processing location	• Front door • Stacker unit		
Relevant parts	• Fold exit sensor (PS12) • SD drive board (SDDB) • FS control board (FSCB)		

(2) Procedure

Step	Action	Control signal	Location of electrical component
1	Initial check items	-	-
2	PS12 I/O check, sensor check	SDDB J9-2 (ON)	SD-511 5-G
3	Replace SDDB	-	-
4	Replace FSCB	-	-

- Link to the wiring diagram (N.2.8 SD-511)

1.10.12 72-43

(1) Contents

JAM type	PK JAM		
JAM code	72-43		
Detection timing	72-43	<When FS-533+PK-519 is installed>	The punch motor (PS202) does not detect rotation of the punch motor after the laps of given time after the punch motor (M201) started operating.
		<When FS-534+PK-520 is installed>	The punch position sensor (PS2) is not unblocked after a lapse of a given time after the punch drive motor (M1) starts rotating.
Misfeed processing location	• Finisher punch section (When FS-533+PK-519 is installed) • Front door (When FS-534+PK-520 is installed)		
Relevant parts	<When FS-533+PK-519 is installed>		• Punch motor (M201) • Punch motor sensor (PS202) • PK control board (PKCB) • FS control board (FSCB)
	<When FS-534+PK-520 is installed>		• Punch drive motor (M1) • Punch position sensor (PS2) • FS control board (FSCB)

(2) Procedure

When FS-533+PK-519 is installed

Step	Action	Control signal	Location of electrical component
1	Initial check items	-	-
2	PS202 I/O check, sensor check	PKCB CN204	FS-533 (PK-519) 5-C
3	M201 operation check	PKCB CN203-1 to 2	FS-533 (PK-519) 4-C
4	Replace PKCB	-	-
5	Replace FSCB	-	-

- Link to the wiring diagram (N.2.6 FS-533)

When FS-534+PK-520 is installed

Step	Action	Control signal	Location of electrical component
1	Initial check items	-	-
2	PS2 I/O check, sensor check	FSCB J7-2 (ON)	FS-534 (PK-520) 6-K
3	M1 operation check	FSCB J7-7 to 8	FS-534 (PK-520) 7-K
4	Replace FSCB	-	-

- Link to the wiring diagram (N.2.7 FS-534)

1.10.13 72-70

(1) Contents

JAM type	PK JAM		
JAM code	72-70		
Detection timing	72-70	<When FS-533+PK-519 is installed>	The puncher home sensor (PS204) is not unblocked even after the set period of time has elapsed after it blocked.
Misfeed processing location	Finisher punch section		
Relevant parts	• Fusing motor (M3) • Paper conveyance motor (M101) • Puncher home sensor (PS204) • FS control board (FSCB)		

(2) Procedure

Step	Action	Control signal	Location of electrical component
1	Initial check items	-	-
2	PS204 I/O check, sensor check	PKCB CN204	FS-533 (PK-519) 6-C
3	M3 operation check	PRCB CN2-9 (REM) PRCB CN2-12 (LOCK)	bizhub 364e/284e/224e 26-I to J
4	M101 operation check	FSCB CN101	FS-533 6-J
5	Replace FSCB	-	-

- Link to the wiring diagram (N.1. bizhub 364e/284e/224e)
- Link to the wiring diagram (N.2.6 FS-533)

1.10.14 72-81

(1) Contents

JAM type	FS staple section		
JAM code	72-81		
Detection timing	72-81	<When FS-533 is installed>	The stapler home sensor (PS110) is not blocked after the stapler motor is energized.
Misfeed processing location	Finisher staple section		
Relevant parts	• Stapler home sensor (PS110) • Stapler unit • Stapler relay board (STREYB) • FS control board (FSCB)		

(2) Procedure

Step	Action	Control signal	Location of electrical component
1	Initial check items	-	-
2	PS110 I/O check, sensor check	FSCB CN110	FS-533 8-D to E
3	Replace stapler unit	-	-
4	Replace STREYB	-	-
5	Replace FSCB	-	-

- Link to the wiring diagram (N.2.6 FS-533)

1.10.15 72-85

(1) Contents

JAM type	SD transport section		
JAM code	72-85		
Detection timing	72-85	<When FS-534+SD-511 is installed>	The SD entrance sensor (PS1) is not blocked even after the set period of time has elapsed after the staple stacker paper detection sensor (PS31) is turned ON by the paper.
Misfeed processing location	• Front door • Stacker unit		
Relevant parts	• SD entrance sensor (PS1) • Staple stacker paper detection sensor (PS31) • SD drive board (SDDB) • FS control board (FSCB)		

(2) Procedure

Step	Action	Control signal	Location of electrical component
1	Initial check items	-	-

Step	Action	Control signal	Location of electrical component
2	PS31 I/O check, sensor check	FSCB J12-11 (ON)	FS-534 6-C
3	PS1 I/O check, sensor check	SDDB J4-8 (ON)	SD-511 4-B
4	Replace SDDB	-	-
5	Replace FSCB	-	-

- Link to the wiring diagram (N.2.7 FS-534)
- Link to the wiring diagram (N.2.8 SD-511)

1.10.16 72-86

(1) Contents

JAM type	SD transport section		
JAM code	72-86		
Detection timing	72-86	<When FS-534+SD-511 is installed>	• The SD entrance sensor (PS1) is not unblocked even after the set period of time has elapsed after it blocked. • When paper discharge control motor abnormality occurs during paper trailing edge control movement.
Misfeed processing location	Front door		
Relevant parts	• SD entrance sensor (PS1) • Paper discharge control motor (M2) • SD drive board (SDDB) • FS control board (FSCB)		

(2) Procedure

Step	Action	Control signal	Location of electrical component
1	Initial check items	-	-
2	PS1 I/O check, sensor check	SDDB J4-8 (ON)	SD-511 4-B
3	M2 operation check	SDDB J5-4 to 7	SD-511 3-B
4	Replace SDDB	-	-
5	Replace FSCB	-	-

- Link to the wiring diagram (N.2.8 SD-511)

1.10.17 72-87

(1) Contents

JAM type	SD transport section		
JAM code	72-87		
Detection timing	72-87	<When FS-534+SD-511 is installed>	The center staple/fold stacker paper detect sensor (PS3) is not turned ON even after the set period of time has elapsed after the SD entrance sensor (PS1) is blocked by the paper.
Misfeed processing location	• Front door • Stacker unit		
Relevant parts	• SD entrance sensor (PS1) • Center staple/fold stacker paper detect sensor (PS3) • SD drive board (SDDB) • FS control board (FSCB)		

(2) Procedure

Step	Action	Control signal	Location of electrical component
1	Initial check items	-	-
2	PS1 I/O check, sensor check	SDDB J4-8 (ON)	SD-511 4-B
3	PS3 I/O check, sensor check	SDDB J7-12 (ON)	SD-511 5-F
4	Replace SDDB	-	-
5	Replace FSCB	-	-

- Link to the wiring diagram (N.2.8 SD-511)

1.10.18 75-42

(1) Contents

JAM type	RU section		
JAM code	75-42		
Detection timing	75-42	<When FS-534 is installed>	The RU entrance sensor (PS2) is not locked even after the set period of time has elapsed after the copier's paper exit sensor (PS3) is unlocked by the paper.

Misfeed processing location	Horizontal transport cover
Relevant parts	• Paper exit sensor (PS3) • RU entrance sensor (PS2) • FS control board (FSCB)

(2) Procedure

Step	Action	Control signal	Location of electrical component
1	Initial check items	-	-
2	PS3 I/O check, sensor check	PRCB CN21-7 (ON)	18-C
3	PS2 I/O check, sensor check	FSCB J6-7 (ON)	FS-534 6-K
4	Replace FSCB	-	-

- Link to the wiring diagram (N.1. bizhub 364e/284e/224e)
- Link to the wiring diagram (N.2.7 FS-534)

1.10.19 75-43

(1) Contents

JAM type	RU section		
JAM code	75-43		
Detection timing	75-43	<When FS-534 is installed>	The RU entrance sensor (PS2) is not unlocked even after the set period of time has elapsed after it locked.
Misfeed processing location	Horizontal transport cover		
Relevant parts	• RU entrance sensor (PS2) • FS control board (FSCB)		

(2) Procedure

Step	Action	Control signal	Location of electrical component
1	Initial check items	-	-
2	PS2 I/O check, sensor check	FSCB J6-7 (ON)	FS-534 6-K
3	Replace FSCB	-	-

- Link to the wiring diagram (N.2.7 FS-534)

1.11 9#-##

1.11.1 92-01, 92-02, 92-40

(1) Contents

JAM type	Misfeed at duplex pre-registration section	
JAM code	92-01, 92-02, 92-40	
Detection timing	92-01	The registration sensor (PS1) is not unblocked even after the lapse of a given period of time after a duplex paper feed sequence has been started.
	92-02	For the second-side feed of paper in the duplex mode, loop forming has not been complete before the second side of a sheet enters the registration roller because the rise timing of load to perform registration is earlier than the rise timing of load to form a loop.
	92-40	For the second-side feed of paper in the duplex mode, the image write start signal permit continues to be disabled for a predetermined period of time after the timing of the image write start signal output.
	-	In case paper position is detected as locating properly after main power switch is turned ON, door and cover are opened / closed or jam/trouble reset is done, it is regarded as paper jam at duplex pre-registration section.
Misfeed processing location	Right door	
Relevant parts	• Transport motor (M1) • ADU transport clutch (CL6) • Registration sensor (PS1) • Front side board (FRB) • Printer control board (PRCB)	

(2) Procedure

Step	Action	Control signal	Location of electrical component
1	Initial check items	-	-
2	PS1 I/O check, sensor check	FRB CN8-3 (ON)	4 to 5-L
3	CL6 operation check	PRCB CN12-11 (ON)	25-C
4	M1 operation check	PRCB CN31-2 (REM) PRCB CN31-5 (LOCK)	bizhub 364e 21-J bizhub 284e 23-J

Step	Action	Control signal	Location of electrical component
			bizhub 224e 24-J
5	PRCB ICP3 conduction check	-	-
6	Replace FRB	-	-
7	Replace PRCB	-	-

- Link to the wiring diagram (N.1. bizhub 364e/284e/224e)

1.11.2 93-10

(1) Contents

JAM type	Misfeed at duplex transport section	
JAM code	93-10	
Detection timing	93-10	The ADU paper passage sensor/2 (PS41) is not blocked even after the set period of time has elapsed after the ADU paper passage sensor/1 (PS40) is unblocked by the paper.
	-	In case the ADU paper passage sensor/1 (PS40) is unblocked or the ADU paper passage sensor/2 (PS41) is blocked after main power switch is turned ON, door and cover are opened / closed or jam/ trouble reset is done, it is regarded as paper jam at duplex transport section.
	-	In case the registration sensor (PS1) is unblocked after main power switch is turned ON, door and cover are opened / closed or jam/trouble reset is done, it is regarded as paper jam at duplex transport section.
	-	In case paper position is detected as locating properly after main power switch is turned ON, door and cover are opened / closed or jam/trouble reset is done, it is regarded as paper jam at duplex transport section.
Misfeed processing location	Right door	
Relevant parts	• Transport motor (M1) • ADU transport motor (M5) • ADU transport clutch (CL6) • Registration sensor (PS1) • ADU paper passage sensor/1 (PS40) • ADU paper passage sensor/2 (PS41) • Front side board (FRB) • Printer control board (PRCB)	

(2) Procedure

Step	Action	Control signal	Location of electrical component
1	Initial check items	-	-
2	PS1 I/O check, sensor check	FRB CN8-3 (ON)	4 to 5-L
3	PS40 I/O check, sensor check	PRCB CN21-10 (ON)	18-C
4	PS41 I/O check, sensor check	PRCB CN21-13 (ON)	18-C
5	CL6 operation check	PRCB CN12-11 (ON)	25-C
6	M1 operation check	PRCB CN31-2 (REM) PRCB CN31-5 (LOCK)	bizhub 364e 21-J bizhub 284e 23-J bizhub 224e 24-J
7	M5 operation check	PRCB CN21-1 to 4	17 to 18-C
8	PRCB ICP3 conduction check	-	-
9	Replace FRB	-	-
10	Replace PRCB	-	-

- Link to the wiring diagram (N.1. bizhub 364e/284e/224e)

1.11.3 99-01

(1) Contents

JAM type	Controller JAM (paper size error)	
JAM code	99-01	
Detection timing	99-01	• As a result of a paper size error, the controller transmits a forced stop command to the printer engine and the printer engine is internally processing the size error. • As a result of a paper size error, the controller transmits a forced stop command to the printer engine; but the paper causing the size error cannot be fed out.
Misfeed processing location	-	
Relevant parts	-	

(2) Procedure

Step	Action	Control signal	Location of electrical component
1	Initial check items	-	-

Step	Action	Control signal	Location of electrical component
2	Open and close the front door of the main body.	-	-

1.11.4 99-02

(1) Contents

JAM type	Controller JAM (controller forced stop command)	
JAM code	99-02	
Detection timing	99-02	The controller detects a fault in print sequence.
Misfeed processing location	-	
Relevant parts	-	

(2) Procedure

Step	Action	Control signal	Location of electrical component
1	Initial check items	-	-
2	Open and close the front door of the main body.	-	-

1.11.5 99-03

(1) Contents

JAM type	Controller JAM	
JAM code	99-03	
Detection timing	99-03	Image stabilization not completing a job.
Misfeed processing location	-	
Relevant parts	-	

(2) Procedure

Step	Action	Control signal	Location of electrical component
1	Initial check items	-	-
2	Open and close the front door of the main body	-	-

1.11.6 99-04

(1) Contents

JAM type	Controller JAM (finisher pre-drive is not completed)	
JAM code	99-04	
Detection timing	99-04	The finisher pre-drive is not completed even with a print start command received.
Misfeed processing location	-	
Relevant parts	-	

(2) Procedure

Step	Action	Control signal	Location of electrical component
1	Initial check items	-	-
2	Open and close the front door of the main body, or open and close the front door of the finisher.	-	-

1.11.7 99-05

(1) Contents

JAM type	Controller JAM (main body not starting a job)	
JAM code	99-05	
Detection timing	99-05	Paper is not taken up and fed in even with a print start command received. The job is not started even with a print start command received.
Misfeed processing location	-	
Relevant parts	-	

(2) Procedure

Step	Action	Control signal	Location of electrical component
1	Initial check items	-	-

Step	Action	Control signal	Location of electrical component
2	Open and close the front door of the main body.	-	-

1.11.8 99-06

(1) Contents

JAM type	Controller JAM (finisher internal processing error)	
JAM code	99-06	
Detection timing	99-06	Finisher internal control processing is not completed even with the job completed.
Misfeed processing location	-	
Relevant parts	-	

(2) Procedure

Step	Action	Control signal	Location of electrical component
1	Initial check items	-	-
2	Open and close the front door of the finisher.	-	-

1.11.9 99-07

(1) Contents

JAM type	Controller JAM (main body not completing a job)	
JAM code	99-07	
Detection timing	99-07	The main body does not complete its paper exit operation. Finisher does not complete its paper exit operation.
Misfeed processing location	-	
Relevant parts	-	

(2) Procedure

Step	Action	Control signal	Location of electrical component
1	Initial check items	-	-
2	Open and close the front door of the main body, or open and close the front door of the finisher.	-	-

1.11.10 99-08

(1) Contents

JAM type	Controller JAM (finisher not starting a job)	
JAM code	99-08	
Detection timing	99-08	The finisher does not accept a print start command.
Misfeed processing location	-	
Relevant parts	-	

(2) Procedure

Step	Action	Control signal	Location of electrical component
1	Initial check items	-	-
2	Open and close the front door of the main body, or open and close the front door of the finisher.	-	-

1.11.11 99-09

(1) Contents

JAM type	Controller JAM (finisher not completing a job)	
JAM code	99-09	
Detection timing	99-09	• A paper exit or paper finishing process inside the finisher is not completed. • The finisher does not start during a reset procedure from the jam.
Misfeed processing location	-	
Relevant parts	-	

(2) Procedure

Step	Action	Control signal	Location of electrical component
1	Initial check items	-	-
2	Open and close the front door of the main body, or open and close the front door of the finisher.	-	-

2. MALFUNCTION CODE

2.1 Display procedure

- The machine's CPU performs a self-diagnostics function that, on detecting a malfunction, gives the corresponding warning code and maintenance call mark on the control panel.
- Touching the maintenance call mark will display the corresponding warning code on the state confirm screen.

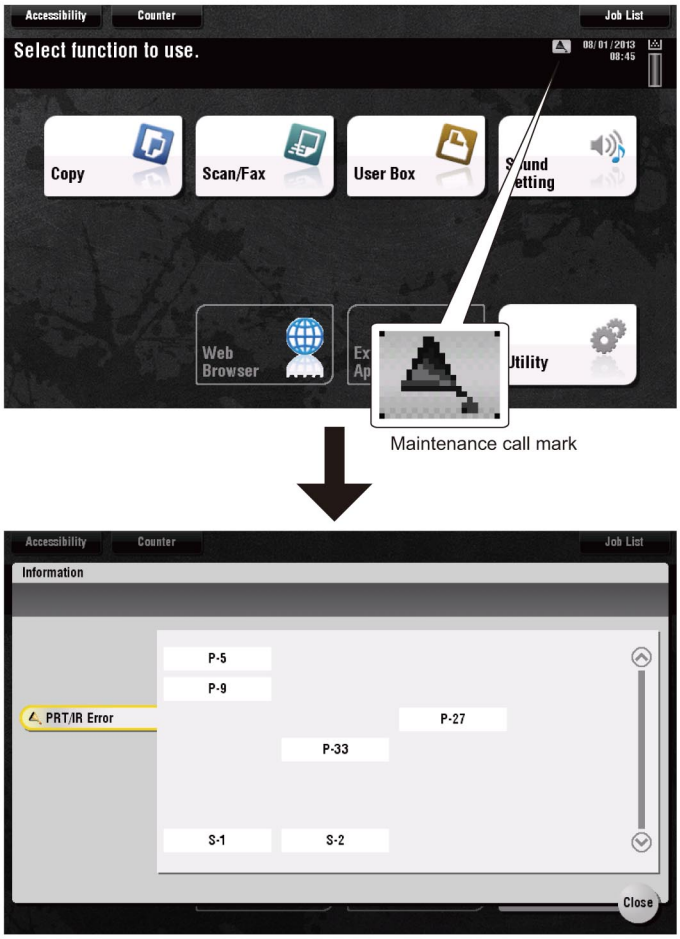

2.2 List of the malfunction code

- If an image stabilization or scanner fault occurs, the corresponding warning code appears.

Code	Item
S-1	CCD gain adjustment failure
S-2	CIS gain adjustment failure *
D-1	Split line detect (front side)
D-3	Split line detect (back side) *
P-5	IDC sensor/Fr failure
P-9	Drum/Development unit failure
P-27	Secondary transfer ATVC failure
P-33	LD malfunction

- *: only when DF-701 is installed

2.3 S-1

2.3.1 Contents

Malfunction type	CCD gain adjustment failure
Malfunction code	S-1
Description timing	It is detected that the CCD clamp gain adjustment value is faulty.
Relevant parts	• LED exposure unit (LU201) • Scanner drive board (SCDB) • CCD board (CCDB) • MFP board (MFPB)

2.3.2 Procedure

1. Correct the harness connection between CCDB PJ3 and MFPB PJ01 if faulty.
2. Check for possible extraneous light and correct as necessary.
3. Clean the lens, mirrors, CCD surface, and shading sheet if dirty.
4. Correct reflective mirror of the scanner if faulty, or change scanner mirror.
5. Replace CCDB.
6. Replace SCDB.
7. Replace MFPB.

2.4 S-2

2.4.1 Contents

Malfunction type	CIS gain adjustment failure (only when DF-701 is installed)
Malfunction code	S-2
Description timing	It is detected that the CIS clamp gain adjustment value is faulty.
Relevant parts	• CIS module (CIS) • Dual scan image processing board (DSIPB) • MFP board (MFPB)

2.4.2 Procedure

1. Correct the harness connection between CIS and DSIPB if faulty.
2. Correct the harness connection between DSIPB and MFPB if faulty.
3. Check for possible extraneous light and correct as necessary.
4. Wipe clean the back side scanning glass surface and shading sheet.
5. Replace CIS.
6. Replace DSIPB.
7. Replace MFPB.

2.5 D-1

2.5.1 Contents

Malfunction type	Split line detect (front side)	
Malfunction code	D-1	
Description timing	• While recovering from the power save mode or when the main power switch is ON, it detects whether or not stain exist at the DF original glass when the DF is closed. This warning will be displayed if the original is set to DF when stain exist. • The thin line detection level and the warning display can be changed by the following setting. [Service Mode] -> [System 2] -> [ADF Scan Glass Contamin. Set.] -> [Front Side]	
Relevant parts	<When DF-624 is installed>	• Glass cleaning motor (M4) • Document reading glass cleaning sensor (PS12) • DF control board (DFCB)
	<When DF-701 is installed>	• Document reading glass cleaning motor (M6) • Document reading glass cleaning sensor (PS13) • DF control board (DFCB)

2.5.2 Procedure

When DF-624 is installed

1. Wipe clean the glass surface of the DF original glass.
2. Check the document reading glass cleaning roller unit for proper installation and correct if necessary.
   Clean the document reading glass cleaning roller unit if dirty.
3. Select [Service Mode] -> [System 2] ->[ADF Scan Glass Contamin. Set.] -> [Front Side], and change the setting.
4. Check the DFCB connector for proper connection and correct as necessary.
5. M4 operation check.
6. Replace the document reading glass cleaning roller unit.
7. Replace DFCB.

When DF-701 is installed

1. Wipe clean the glass surface of the DF original glass.
2. Check the document reading glass cleaning roller unit for proper installation and correct if necessary.
   Clean the document reading glass cleaning roller unit if dirty.
3. Select [Service Mode] -> [System 2] ->[ADF Scan Glass Contamin. Set.] -> [Front Side], and change the setting.
4. Check the DFCB connector for proper connection and correct as necessary.
5. M6 operation check.
6. Replace the document reading glass cleaning roller unit.
7. Replace DFCB.

2.6 D-3

2.6.1 Contents

Malfunction type	Split line detect (back side) (only when DF-701 is installed)
Malfunction code	D-3
Description timing	• When the main power switch is turned ON or when the machine is recovering from the power save mode, if the DF is closed, the machine detects whether stain exists in the back side original scanning section (CIS).

	This warning will be displayed if the original is set to DF when stain exist. • The thin line detection level and the warning display can be changed by the following setting. [Service Mode] -> [System 2] -> [ADF Scan Glass Contamin. Set.] -> [Back Side]
Relevant parts	• CIS module (CIS) • CIS power supply (CISPU) • Dual scan image processing board (DSIPB)

2.6.2 Procedure

1. Wipe clean the CIS glass surface.
2. Check the front side glass cleaning roller unit for proper installation and correct if necessary.
   Clean the front side glass cleaning roller unit if dirty.
3. If there is a problem in the CIS module connection, correct the faulty connection.
4. Replace CIS.
5. Replace CISPU.
6. Replace DSIPB.

2.7 P-5

2.7.1 Contents

Malfunction type	IDC sensor/Fr failure
Malfunction code	P-5
Description timing	• During IDC sensor light intensity correction, output voltage detected for all eight sample patterns are 3.35 V or more. • During IDC sensor light intensity correction, sensor output voltage for light intensity selected after the correction is under 0.7 V. • During IDC base surface detective control, sensor output voltage detected is under 0.7 V or over 3.35V. • During image stabilization (gamma correction control), detected output value for IDC sensor did not go below threshold (half the value of what is detected by IDC sensor on the belt surface) for three consecutive times (position of the pattern end is not detected). • During image stabilization (gamma correction control), sensor's output value for hyper 0 gradation after the primary approximation is half the detection level on the belt surface or under.
Relevant parts	• IDC sensor/Fr (IDCS/Fr) • IDC sensor shutter solenoid (SD2) • Printer control board (PRCB) • High voltage unit (HV) • Transfer belt unit

2.7.2 Procedure

1. Wipe clean the surface of the transfer belt with a soft cloth, if it is dirty.
2. Change the image transfer belt unit if the transfer belt is damaged.
3. Reinstall or reconnect IDCS/Fr, sensor shutter or connector, if it is installed or connected improperly.
4. Clean IDCS/Fr if it is dirty.
5. Check the HV connector for proper connection and correct as necessary.
6. SD2 operation check.
7. Open/close the front door, run an image stabilization sequence, and select [State Confirmation] -> [Level History 1] to check the IDC value.
   IDC1: IDCS/Fr
   If the value is 1.0 V or less, replace IDCS/Fr.
8. PRCB ICP11 conduction check.
9. Replace PRCB.

2.8 P-9

2.8.1 Contents

Malfunction type	Drum/Development unit failure
Malfunction code	P-9
Description timing	• All density readings taken from the density pattern produced on the transfer belt are 1.0 g/m^2 (IDC sensor photo receiver output) or less during max. density adjustment (Vg/Vdc adjustment). • All density readings taken from the density pattern produced on the transfer belt are 5.0 g/m^2 (IDC sensor photo receiver output) and more during max. density adjustment (Vg/Vdc adjustment).
Relevant parts	• Drum unit • Developing unit • IDC sensor/Fr (IDCS/Fr) • IDC sensor shutter solenoid (SD2) • Printer control board (PRCB) • High voltage unit (HV) • Transfer belt unit

2.8.2 Procedure

1. Select [Imaging Process Adjustment] -> [Max Image Density Adj] and, if the setting value is negative, readjust.
2. Check the drive transmission portion of the drum/developing unit and correct as necessary.
3. Clean the IDC sensor/Fr (IDCS/Fr) window if dirty.

4. Clean the contact of the drum/developing unit connector if dirty.
5. Check the HV connector for proper connection and correct as necessary.
6. SD2 operation check.
7. Replace drum unit.
8. Replace developing unit.
9. Replace the transfer belt unit.
10. Replace HV.
11. Replace PRCB.

2.9 P-27

2.9.1 Contents

Malfunction type	Secondary transfer ATVC failure
Malfunction code	P-27
Description timing	An abnormal average value is detected during an adjustment of the second transfer ATVC value.
Relevant parts	• High voltage unit (HV) • Printer control board (PRCB) • Image transfer entrance guide • 2nd transfer assy • Transfer belt unit

2.9.2 Procedure

1. Check the contact between the roller opposed to the 2nd transfer roller in the transfer belt unit and the grounding terminal. Clean the joint or correct if necessary.
2. Check the image transfer entrance guide for proper installation and correct if necessary.
3. Check that the spring does not come off during the pressure operation of the 2nd transfer roller and correct if necessary.
4. Check the contact at the joint of the 2nd transfer assy and HV. Clean the joint or correct if necessary.
5. Replace the transfer belt unit.
6. Replace HV.
7. Replace PRCB.

2.10 P-33

2.10.1 Contents

Malfunction type	LD malfunction
Malfunction code	P-33
Description timing	The DETOUT signal of the LD drive detected malfunction consecutively for the predetermined frequency.
Relevant parts	• Laser diode/K (LD/K) • Laser drive board (LDDB) • PH unit • PH relay board (PHRYB) • MFP board (MFPB) • Printer control board (PRCB)

2.10.2 Procedure

1. Replace the PH unit.
2. Replace PHRYB.
3. Replace the PRCB.

3. TROUBLE CODE

3.1 Display procedure

- The machine's CPU performs a self-diagnostics function that, on detecting a malfunction, gives the corresponding malfunction code on the control panel.

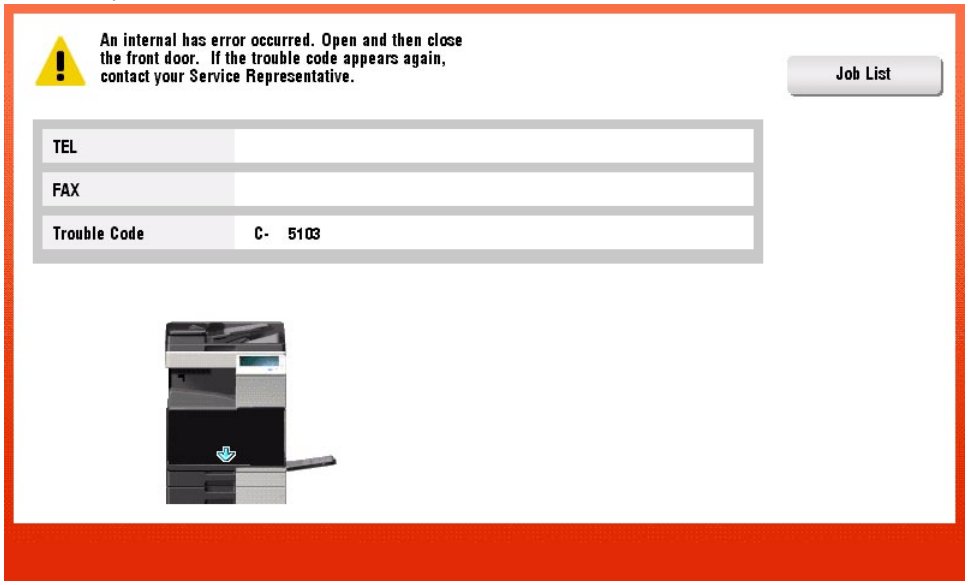

3.2 Trouble resetting procedure

- Different malfunction resetting procedures apply depending on the rank of the trouble code.

* List of malfunction resetting procedures

Trouble code rank	Resetting procedures
Rank A	Trouble reset: Refer to the Trouble resetting procedure by Trouble Reset key.
Rank B	Opening/closing the front door Trouble reset: When the [internal error. auto cancel] for rank B is set to "Yes", after the set period of time, trouble is automatically cleared.
Rank C	Turning main power switch OFF/ON Trouble reset: When the [internal error. auto cancel] for rank C is set to "Yes", after the set period of time, trouble is restarted and cleared.

3.2.1 Trouble resetting procedure by Trouble Reset key

(1) Use

- If the all troubles occur and the status would not be cleared by turning main power switch OFF and ON again, or opening and closing the front door, clear the status of the machine.
- To be used when the status would not be cleared by turning main power switch OFF and ON again, or opening and closing the front door in case of a trouble.

(2) Procedure

1. Turn OFF the main power switch.
2. Turn main power switch ON while pressing the Reset key.
3. Touch [Trouble Reset].
4. Check to make sure that [OK] is displayed and it has been reset.
5. After turning off the main power switch, turn it on again more than 10 seconds after and check if the machine starts correctly.

3.2.2 Trouble resetting procedure by the auto cancel function

(1) Use

- When rank B or C trouble occurs, MFP automatically clears trouble and makes the MFP ready for use. When the trouble auto cancel function is enabled, upon the occurrence of trouble to be automatically cleared, the trouble detection message is displayed on the screen and the trouble is automatically cleared. If the trouble remains after performing the auto cancel operation 3 times, the normal trouble code display screen appears.

(2) Procedure

1. Select [Yes] for the trouble rank to which the trouble auto cancel operation is applied in [Service Mode] -> [System 2] -> [▶] -> [Internal Error. Auto Cancel]. (The default setting for rank C is set to [Yes].)
2. Touch [OK], and turning main power switch OFF and ON again.

3.2.3 Trouble resetting procedure by remote operation

(1) Use

- Trouble can be cleared by remote operation using the applications or CS Remote Care system.
- The combinations of the applications to be used and the ranks of trouble to be cleared are shown below.

Trouble code rank Application	Rank A	Rank B	Rank C
PageScope Web Connection	Cannot be cleared	Can be cleared	Can be cleared
OpenAPI (PageScope Enterprise Suite)	Cannot be cleared	Can be cleared	Can be cleared
CS Remote Care (Excluding communications by fax modem)	Can be cleared	Can be cleared	Can be cleared

(2) Procedure

(a) PageScope Web Connection

1. Access the PageScope Web Connection of the MFP where trouble occurs.
2. The screen for logging into Administrator Mode appears.
3. Check the following message appears; “An error has occurred. Do you want to clear the error?”
   Click [Trouble Reset].
4. Click [Trouble Reset] again in the confirmation screen.
5. Check that the MFP starts normally.

(b) OpenAPI (PageScope Enterprise Suite)

1. Access PageScope Enterprise Suite.
2. Select [Device List] -> [Device Management] -> [Device List] -> [Device List] -> [Device].
3. For rank B trouble, click [Trouble Reset]. For rank C trouble, click [Reset].
4. For rank B trouble, click the [Execute] button.
   For rank C trouble, click the [Execute] button in [Device Reset].
5. Check that the MFP starts normally.

(c) CS Remote Care

- Refer to the CS Remote Care Center manual.

3.3 Trouble isolation function

- The trouble isolation function enables you to control MFP temporarily isolating faulty units and options where the trouble isolation function can be applied when trouble occurs. This allows you to continue using the other units that are not affected and reduce down time that continues until CE resolves the problem.
- This function can be selected for the following units and options.
  - Tray 1
  - Tray 2
  - Tray 3
  - Tray 4
  - LCT
  - Manual
  - Half-Fold
  - Center Stapling
  - Tri-Fold
  - Staple
  - Scanner
  - DF
- If a problem occurs with the units where the trouble isolation function can be applied, the control panel displays a trouble code and a key with which you decide whether to continue using the MFP. When you press down the key, the control panel displays the units that will be isolated as well as the next confirmation key with which you decide to continue.
- When you press down the confirmation key, the message on the control panel asks you to turn OFF and ON the main power switch. After turning OFF and ON the main power switch, the MFP starts operating, isolating the faulty units. The message on the control panel also tells that the MFP is working, isolating the faulty units.
- To temporarily isolate faulty units and continue using the MFP with the trouble isolation function, be sure to make the above mentioned control panel operation. The faulty units cannot be automatically isolated.

NOTE

- **The malfunction detection mechanism is not applied to units and options that are being isolated.**

3.4 List of the trouble code

Code	Item	Rank
C0002	Paper feed communication error	C
C0106	Tray 3/LCT paper feed motor turning at abnormal timing	B
C0107	Tray 3/LCT vertical transport motor turning at abnormal timing	B
C0108	Tray 4 paper feed motor turning at abnormal timing	B
C0109	Tray 4 vertical transport motor turning at abnormal timing	B
C0202	Tray 1 feeder up/down abnormality	B
C0204	Tray 2 feeder up/down abnormality	B
C0206	Tray 3 lift-up failure	B
C0208	Tray 4 lift-up failure	B
C0210	LCT lift failure	B
C0211	Manual feed up/down abnormality	B

Code	Item	Rank
C0214	LCT shift failure	B
C1004	FNS communication error <When FS-533, FS-534 or JS-506 is installed>	C
C1081	SD communication error <When FS-534+SD-511 is installed>	C
C1102	Main tray up/down motor's drive malfunction <When FS-533 or FS-534 is installed>	B
C1103	Alignment plate motor/Fr's malfunction <When FS-533 or FS-534 is installed>	B
C1105	Bundle eject motor's drive malfunction <When FS-534 is installed>	B
C1106	Stapler movement motor's malfunction <When FS-533 or FS-534 is installed>	B
C1109	Stapler motor's drive malfunction <When FS-533 or FS-534 is installed>	B
C1112	Stapler motor's malfunction <When FS-534+SD-511 is installed>	B
C1113	Center-staple lead edge stopper motor malfunction <When FS-534+SD-511 is installed>	B
C1114	Center-staple front adjust drive motor malfunction <When FS-534+SD-511 is installed>	B
C1115	Center-staple knife drive motor malfunction <When FS-534+SD-511 is installed>	B
C1132	Punch drive motor's malfunction <When FS-533+PK-519 or FS-534+PK-520 is installed>	B
C1140	Alignment plate motor/Rr's malfunction <When FS-533 or FS-534 is installed>	B
C1141	Paddle motor's drive malfunction <When FS-534 is installed>	B
C1144	Pre-eject drive motor's malfunction <When FS-534 is installed>	B
C1145	Trailing edge stopper motor's malfunction <When FS-534 is installed>	B
C1156	Center-staple paddle roller motor's malfunction (trailing edge) <When FS-534+SD-511 is installed>	B
C1182	Shift motor drive malfunction <When JS-506 is installed>	B
C1184	Paper discharge control motor's malfunction <When FS-534 is installed>	B
C1195	Paper discharge control motor's malfunction <When FS-534+SD-511 is installed>	B
C1196	Center fold roller motor's malfunction <When FS-534+SD-511 is installed>	B
C1197	Tri-folding guide motor's malfunction <When FS-534+SD-511 is installed>	B
C11A1	Exit roller pressure/ retraction malfunction <When FS-533 is installed>	B
C11A2	Accommodation roller pressure/ retraction malfunction <When FS-534 is installed>	B
C11E1	Paper exit switching drive malfunction <When FS-534 is installed>	B
C1402	FS nonvolatile memory error <When FS-533 is installed>	C
C2355	Transfer belt cleaner cooling fan's failure to turn	B
C2414	Developing unit new article release	B
C2557	Abnormally low toner density detected black TCR sensor	B
C2558	Abnormally high toner density detected black TCR sensor	B
C255C	Black TCR sensor adjustment failure	B
C2564	Black TCR sensor failure	B
C2650	Main backup media access error	C
C2A14	Drum unit new release failure	B
C3101	Fusing roller separation failure	B
C3201	Fusing motor failure to turn	B
C3202	Fusing motor turning at abnormal timing	B
C3302	Paper cooling fan failure to turn	B
C3425	Fusing warm-up trouble	A
C3722	Fusing abnormally high temperature detection (Edge of the heating side)	A
C3725	Fusing abnormally high temperature detection (Main of the heating side)	A
C3726	Fusing abnormally high temperature detection (Center of the heating side)	A
C3825	Fusing abnormally low temperature detection (Main of the heating roller)	A
C3826	Fusing abnormally low temperature detection (Center of the heating roller)	A
C3922	Fusing sensor wire breaks detection (Edge of the heating roller)	A
C3925	Fusing sensor wire breaks detection (Center of the heating roller)	A
C3926	Fusing sensor wire breaks detection (Middle of the heating roller)	A
C392A	Undetectable	
C4091	I/F communication error	C
C4101	Polygon motor rotation trouble	B
C4501	Laser malfunction	B
C4801	Main unit board failure	C
C4802	Main unit backup data miscompare	C
C5102	Transport motor's failure to turn	B

Code	Item	Rank
C5103	Transport motor's turning at abnormal timing	B
C5351	Power supply cooling fan motor's failure to turn	B
C5354	Ozone fan's failure to turn	B
C5355	Toner bottle cooling fan's failure to turn	B
C5370	Machine rear side cooling fan's failure to turn	C
C5372	MFP control board CPU temperature failure	C
C5501	AC signal abnormality	C
C5601	Engine control malfunction	C
C5603	Expansion control board communication error	C
C6001	DF related configuration error 1	C
C6002	DF related configuration error 2	C
C6102	Drive system home sensor malfunction	B
C6103	Slider over running	B
C6104	Back side cleaning home sensor abnormality (initial)	B
C6105	Back side cleaning home sensor abnormality (normal)	B
C6301	Undetectable	
C6704	Image input time out	C
C6751	CCD clamp/gain adjustment failure	B
C6752	ASIC clock input error (front side)	C
C6753	ASIC clock input error (back side)	C
C6754	CIS clamp adjustment failure	B
C6755	CIS gain adjustment failure	B
C6756	CCD power-supply voltage malfunction	C
C6901	DSC board mount failure 1	C
C6902	DSC board bus check NG1-1	C
C6903	DSC board bus check NG1-2	C
C6911	DSC board mount failure 2	C
C6912	DSC Bus check NG2-1	C
C6913	DSC Bus check NG2-2	C
C6F01	Scanner sequence trouble 1	C
C6F02	Reserved	
C6F03	Reserved	
C6F04	Reserved	
C6F05	Reserved	
C6F06	Reserved	
C6F07	Reserved	
C6F08	Reserved	
C6F09	Reserved	
C6F0A	Reserved	
C6FDC	Reserved	
C6FDD	Reserved	
C8101	Before reading pressure welding alienation mechanism <When DF-624 or DF-701 is installed>	B
C8107	Glass cleaning mechanism trouble <When DF-624 or DF-701 is installed>	B
C8302	Cooling fan trouble <When DF-624 or DF-701 is installed>	B
C8401	Data flash failure	C
C9401	Exposure LED lighting failure	A
C9402	Exposure LED lighting abnormally	A
C9403	CIS LED lighting failure	A
C9404	CIS LED lighting abnormally	A
CA051	Standard controller configuration failure	C
CA052	Controller hardware error	C
CA053	Controller start failure	C
CB001	FAX board error 1	C
CB002	FAX board error 2	C
CB003	FAX board error 3	C
CB051	FAX board mount failure line 1	C
CB052	FAX board mount failure line 2	C

Code	Item	Rank
CB110	FAX driver error: Instance generation error or observer registration error	C
CB111	FAX driver error: Configuration space initialization NG	C
CB112	FAX driver error: Semaphore acquisition, release error	C
CB113	FAX driver error: Sequence error among main body tasks	C
CB114	FAX driver error: Message queue control error	C
CB115	FAX driver error: Main body - sequence error among FAX boards	C
CB116	FAX driver error: FAX board nonresponse (Nonresponse after initialization)	C
CB117	FAX driver error: ACK waiting timeout error	C
CB118	FAX driver error: Receiving undefined frame	C
CB119	FAX driver error: DMA transfer error	C
CB120	JC soft error	C
CB122	Device error (GA LOCAL SRAM)	C
CB123	Device error (DRAM)	C
CB125	Device error (GA)	C
CB126	Timeout error due to nonresponse from DC during suspension process	C
CB127	Timeout error due to nonresponse from CC during suspension process	C
CB128	Timeout error due to nonresponse from LINE during suspension process	C
CB130	MIF driver error: Driver soft error	C
CB131	MIF driver error: Reception frame length error from main	C
CB132	MIF driver error: Reception frame header error from main	C
CB133	MIF driver error: 232C i/f sequence error	C
CB134	MIF driver error: DPRAM i/f sequence error	C
CB135	MIF driver error: DPRAM CTL/STL register error	C
CB136	MIF driver error: ACK waiting timeout	C
CB137	MIF driver error: DPRAM RESET reception	C
CB140	MSG I/F Error with JC	C
CB141	I/F error with main: I/F error with driver	C
CB142	I/F error with main: Undefined command reception	C
CB143	I/F error with main: Command frame length error	C
CB144	I/F error with main: Command parameter length error	C
CB145	I/F error with main: Undefined parameter	C
CB146	I/F error with main: Command/response sequence error	C
CB150	Line control: External class instance acquisition error	C
CB151	Line control: Job start error (Starting job parameter error/child job generation error)	C
CB152	Line control: Doc access error (Report buf access error)	C
CB153	Line control: Response wait timeout from external task	C
CB154	Line control: Internal que table control error (create/enque/deque)	C
CB160	1 destination control: Instance generation error	C
CB161	1 destination control: Timeout error	C
CB162	1 destination control: Interface error	C
CB163	1 destination control: Message que control error	C
CB164	1 destination control: Semaphore acquisition release error	C
CB165	1 destination control: Observer registration error	C
CB166	1 destination control: Reception resource check error	C
CB167	1 destination control: Deployment error of sending image information	C
CB168	1 destination control: Serialization error of receiving image	C
CB169	1 destination control: Access error to quick memory data	C
CB170	Page control: Internal que table control error (create/enque/deque)	C
CB171	Page control: Instance generation error	C
CB172	Page control: Timeout error	C
CB173	Page control: Interface error	C
CB174	Page control: Semaphore acquisition release error	C
CB175	Page control: Observer registration error	C
CB176	Page control: Unable to check TTI domain	C
CB177	Page control: Error return from TTI rasterizer	C
CB178	Page control: Receiving job generation error	C
CB179	Page control: Sequence control error	C

Code	Item	Rank
CB185	Page control: Receiving data size logic error (Receiving data are not multiples of dotline)	C
CB186	Page control: Image buf acquisition (alloc) error	C
CB187	Page control: Error return from compressor	C
CB188	Page control: BandBuf control error (newInstance/get/free)	C
CB190	USB IF error (OS notifies an error during configuration setting after recovery from the sleep or attach.)	C
CB191	USB IF error (EndPoint1: Bulk Out (command, transmitted image data)) (error retry 1 min. timeout)	C
CB192	USB IF error (EndPoint2: Bulk In (response, received image data)) (error retry 5 sec. timeout)	C
CB193	USB IF error (EndPoint3: Interrupt In (fax board status)) (error retry 1 min. timeout)	C
CB194	USB IF error (EndPoint4: Bulk Out (main body status)) (error retry 3 sec. timeout)	C
CB195	USB IF error (Attach not detected for 1 min. after recovery from sleep)	C
CB196	USB IF error (Detach not detected for 1 min. after recovery from sleep)	C
CC001	Vendor connection failure	C
CC140	Trouble related to security	C
CC151	ROM contents error upon startup (MSC)	C
CC152	ROM contents error upon startup (scanner)	C
CC155	Finisher ROM error <When FS-533 or FS-534 is installed>	C
CC156	DF ROM error <When DF-624 or DF-701 is installed>	C
CC159	ROM contents error upon startup (DSC1)	C
CC15A	ROM contents error upon startup (DSC2) <When DF-701 is installed>	C
CC15B	Flash ROM error (saddle) <When SD-511 is installed>	C
CC15C	Engine Flash ROM writing error	C
CC163	ROM contents error (PRT)	C
CC164	ROM contents error (MSC)	C
CC165	ROM contents error (DF)	C
CC170	Dynamic link error during starting (AP0)	C
CC171	Dynamic link error during starting (AP1)	C
CC172	Dynamic link error during starting (AP2)	C
CC173	Dynamic link error during starting (AP3)	C
CC174	Dynamic link error during starting (AP4)	C
CC180	Dynamic link error during starting (LDR)	C
CC181	Dynamic link error during starting (IBR)	C
CC182	Dynamic link error during starting (IID)	C
CC183	Dynamic link error during starting (IPF)	C
CC184	Dynamic link error during starting (IMY)	C
CC185	Dynamic link error during starting (SPF)	C
CC186	Dynamic link error during starting (OAP)	C
CC190	Outline font load error	C
CC191	Setting parameter load error (LDR)	C
CC211	Authentication device general error	C
CC212	User validation error	C
CC213	User registration error Card information setting error	C
CC214	User information deletion error	C
CC215	Undetectable	
CC216	Acquisition failure of the number of trials/Initialize error of number of authentication	C
CD002	JOB RAM save error	C
CD004	Hard disk access error (connection failure)	C
CD00F	Hard disk data transfer error	C
CD010	Hard disk unformat	C
CD011	Hard disk out of specifications mounted	C
CD012	Mount error due to hard disk being unformatted	C
CD020	Hard disk verify error	C
CD030	Hard disk management information reading error	C
CD041	HDD command execution error	C
CD042		C

Code	Item	Rank
CD043		C
CD044		C
CD045		C
CD046		C
CD047	HDD SCSI library error	C
CD048		C
CD049		C
CD04A		C
CD04B		C
CD110	Wireless LAN destination initialization error	C
CD201	File memory mounting error	C
CD202	Memory capacity discrepancy	C
CD203	Memory capacity discrepancy 2	C
CD211	PCI-SDRAM DMA operation failure	C
CD212	Compression/extraction timeout detection	C
CD231	Undetectable	
CD241	Encryption ASIC setting error	C
CD242	Encryption ASIC mounting error	C
CD251	Undetectable	
CD261	USB host board failure	C
CD262	Extension network adapter installation error	C
CD271	i-Option activated and additional memory not installed	C
CD272	i-Option activated and additional memory and HDD not installed	C
CD3##	Nonvolatile data error	-
CD370	Nonvolatile data multiple errors	-
CD390	Nonvolatile data checksum error	C
CD3A0	Counter error	C
CD401	NACK command incorrect	C
CD402	ACK command incorrect	C
CD403	Checksum error	C
CD404	Receiving packet incorrect	C
CD405	Receiving packet analysis error	C
CD406	ACK receiving timeout	C
CD407	Retransmission timeout	C
CD411	Touch panel board error	C
CD412	Touch panel type mismatch	C
CD413	Electrostatic touch panel operation mode error	C
CDC##	Trouble related to security	-
CDF50	ASIC image version failure	C
CDF51	ASIC image version failure (back side) <When DF-701 is installed>	C
CDF70	ASIC image access failure	C
CDF71	ASIC image access failure (back side) <When DF-701 is installed>	C
CDFA0	ASIC image error	C
CDFA1	ASIC image error (back side) <When DF-701 is installed>	C
CE001	Abnormal message queue	C
CE002	Message and method parameter failure	C
CE003	Task error	C
CE004	Event error	C
CE005	Memory access error	C
CE006	Header access error	C
CE007	DIMM initialize error	C
CE101	Browser finish detected	C
CE201	Transmission operation log storage fault	C
CE301	Referring incorrect memory	C
CE302	Incorrect command	C
CE303	Finished due to error inside Qt library	C
CE304	Finished due to error outside Qt library	C
CE305	Program forced to stop	C

Code	Item	Rank
CED01	The authentication application information does not exist in the hard disk/SSD board in the enhanced server authentication state.	C
CEEE1	MFP board malfunction	C
CEEE2	Scanner section malfunction	A
CEEE3	Printer control board malfunction	A
CF###	Trouble code (CF###) is referred to as abort code. For details of abort code, refer to “K.4. ABORT CODE”.	C

3.5 C0###

3.5.1 C0002

(1) Contents

Trouble type	Paper feed communication error
Trouble code	C0002
Rank	C
Detection timing	When the printer control board (PRCB) is receiving data, a communication error is detected.
Trouble isolation	-
Relevant electrical parts	Printer control board (PRCB)

(2) Procedure

Step	Action	Control signal	Location of electrical components
1	Turn OFF the main power switch, disconnect and then connect the power cord. Wait for 10 sec. or more after connect the power cord, and turn ON the main power switch.	-	-
2	Rewrite the firmware.	-	-
3	Replace PRCB	-	-

- Link to the layout drawings for related parts by each trouble code (S.1. C0002, C4802, C5601, CC15C, CEEE3)

3.5.2 C0106

(1) Contents

Trouble type	Tray 3/LCT paper feed motor turning at abnormal timing	
Trouble code	C0106	
Rank	B	
Detection timing	• The motor lock signal remains HIGH for a predetermined continuous period of time while the motor is turning. • The motor lock signal remains LOW for a predetermined continuous period of time while the motor remains stationary.	
Trouble isolation	-	
Relevant electrical parts	<When PC-110 or PC-210 is installed>	• Tray 3 paper feed motor (M111) • PC control board (PCCB)
	<When PC-410 is installed>	• Paper feed motor (M131) • PC control board (PCCB)

(2) Procedure

When PC-110 or PC-210 is installed

Step	Action	Control signal	Location of electrical components
1	Check the connector between M111-PCCB CN5 for proper connection and correct as necessary.	-	-
2	Check the connector of M111 for proper drive coupling and correct as necessary.	-	-
3	M111 operation check	PCCB CN5-5 (CW/CCW)	PC-110/PC-210 4-C
4	Replace M111	-	-
5	Replace PCCB	-	-

- Link to the wiring diagram (N.2.3 PC-110)
- Link to the wiring diagram (N.2.4 PC-210)
- Link to the layout drawings for related parts by each trouble code (S.2.1 PC-110/PC-210)

When PC-410 is installed

Step	Action	Control signal	Location of electrical components
1	Check the connector between M131-PCCB CN5 for proper connection and correct as necessary.	-	-
2	Check the connector of M131 for proper drive coupling and correct as necessary.	-	-

Step	Action	Control signal	Location of electrical components
3	M131 operation check	PCCB CN5-5 (CW/CCW)	PC-410 5-J
4	Replace M131	-	-
5	Replace PCCB	-	-

- Link to the wiring diagram (N.2.5 PC-410)
- Link to the layout drawings for related parts by each trouble code (S.2.2 PC-410)

3.5.3 C0107

(1) Contents

Trouble type	Tray 3/LCT vertical transport motor turning at abnormal timing	
Trouble code	C0107	
Rank	B	
Detection timing	• The motor lock signal remains HIGH for a predetermined continuous period of time while the motor is turning. • The motor lock signal remains LOW for a predetermined continuous period of time while the motor remains stationary.	
Trouble isolation	-	
Relevant electrical parts	<When PC-110 or PC-210 is installed>	• Tray 3 vertical transport motor (M112) • PC control board (PCCB)
	<When PC-410 is installed>	• Vertical transport motor (M132) • PC control board (PCCB)

(2) Procedure

When PC-110 or PC-210 is installed

Step	Action	Control signal	Location of electrical components
1	Check the connector between M112-PCCB CN5 for proper connection and correct as necessary.	-	-
2	Check the connector of M112 for proper drive coupling and correct as necessary.	-	-
3	M112 operation check	PCCB CN5-13 (CW/CCW)	PC-110/PC-210 3 to 4-C
4	Replace M112	-	-
5	Replace PCCB	-	-

- Link to the wiring diagram (N.2.3 PC-110)
- Link to the wiring diagram (N.2.4 PC-210)
- Link to the layout drawings for related parts by each trouble code (S.3.1 PC-110/PC-210)

When PC-410 is installed

Step	Action	Control signal	Location of electrical components
1	Check the connector between M132-PCCB CN5 for proper connection and correct as necessary.	-	-
2	Check the connector of M132 for proper drive coupling and correct as necessary.	-	-
3	M132 operation check	PCCB CN5-13 (CW/CCW)	PC-410 4-J
4	Replace M132	-	-
5	Replace PCCB	-	-

- Link to the wiring diagram (N.2.5 PC-410)
- Link to the layout drawings for related parts by each trouble code (S.3.2 PC-410)

3.5.4 C0108

(1) Contents

Trouble type	Tray 4 paper feed motor turning at abnormal timing	
Trouble code	C0108	
Rank	B	
Detection timing	<When PC-210 is installed>	• The motor lock signal remains HIGH for a predetermined continuous period of time while the motor is turning. • The motor lock signal remains LOW for a predetermined continuous period of time while the motor remains stationary.
Trouble isolation	-	
Relevant electrical parts	• Tray 4 paper feed motor (M121) • PC control board (PCCB)	

(2) Procedure

Step	Action	Control signal	Location of electrical components
1	Check the connector between M121-PCCB CN9 for proper connection and correct as necessary.	-	-

Step	Action	Control signal	Location of electrical components
2	Check the connector of M121 for proper drive coupling and correct as necessary.	-	-
3	M121 operation check	PCCB CN9-5 (CW/CCW)	PC-210 6-K
4	Replace M121	-	-
5	Replace PCCB	-	-

- Link to the wiring diagram (N.2.4 PC-210)
- Link to the layout drawings for related parts by each trouble code (S.4. C0108)

3.5.5 C0109

(1) Contents

Trouble type	Tray 4 vertical transport motor turning at abnormal timing	
Trouble code	C0109	
Rank	B	
Detection timing	<When PC-210 is installed>	• The motor lock signal remains HIGH for a predetermined continuous period of time while the motor is turning. • The motor lock signal remains LOW for a predetermined continuous period of time while the motor remains stationary.
Trouble isolation	-	
Relevant electrical parts	• Tray 4 vertical transport motor (M122) • PC control board (PCCB)	

(2) Procedure

Step	Action	Control signal	Location of electrical components
1	Check the connector between M122-PCCB CN9 for proper connection and correct as necessary.	-	-
2	Check the connector of M122 for proper drive coupling and correct as necessary.	-	-
3	M122 operation check	PCCB CN9-13 (CW/CCW)	PC-210 6-K
4	Replace M122	-	-
5	Replace PCCB	-	-

- Link to the wiring diagram (N.2.4 PC-210)
- Link to the layout drawings for related parts by each trouble code (S.5. C0109)

3.5.6 C0202

(1) Contents

Trouble type	Tray 1 feeder up/down abnormality
Trouble code	C0202
Rank	B
Detection timing	The tray 1 upper limit sensor (PS25) is not blocked even after the lapse of a given period of time after the lifting motion has been started.
Trouble isolation	Tray 1
Relevant electrical parts	• Tray 1 lift-up motor (M12) • Tray 1 upper limit sensor (PS25) • Printer control board (PRCB)

(2) Procedure

Step	Action	Control signal	Location of electrical components
1	Check the connector between M12-PRCB CN25 for proper connection and correct as necessary.	-	-
2	Check the connector of M12 for proper drive coupling and correct as necessary.	-	-
3	Check the connector between PS25-relay CN30-PRCB CN26 for proper connection and correct as necessary.	-	-
4	PS25 I/O check, sensor check	PRCB CN26-3 (ON)	7-C
5	M12 operation check	PRCB CN25-5 (REM)	1-C
6	Replace M12	-	-
7	PRCB ICP5 conduction check	-	-
8	Replace PRCB	-	-

- Link to the wiring diagram (N.1. bizhub 364e/284e/224e)
- Link to the layout drawings for related parts by each trouble code (S.6. C0202)

3.5.7 C0204

(1) Contents

Trouble type	Tray 2 feeder up/down abnormality
Trouble code	C0204
Rank	B
Detection timing	The tray 2 upper limit sensor (PS22) is not blocked even after the lapse of a given period of time after the lifting motion has been started.
Trouble isolation	Tray 2
Relevant electrical parts	• Tray 2 lift-up motor (M13) • Tray 2 upper limit sensor (PS22) • Printer control board (PRCB)

(2) Procedure

Step	Action	Control signal	Location of electrical components
1	Check the connector between M13-PRCB CN20 for proper connection and correct as necessary.	-	-
2	Check the connector of M13 for proper drive coupling and correct as necessary.	-	-
3	Check the connector between PS22-relay CN40-PRCB CN19 for proper connection and correct as necessary.	-	-
4	PS22 I/O check, sensor check	PRCB CN19-6 (ON)	9-C
5	M13 operation check	PRCB CN20-5 (REM)	2-C
6	Replace M13	-	-
7	PRCB ICP4 conduction check	-	-
8	Replace PRCB	-	-

- Link to the wiring diagram (N.1. bizhub 364e/284e/224e)
- Link to the layout drawings for related parts by each trouble code (S.7. C0204)

3.5.8 C0206

(1) Contents

Trouble type	Tray 3 lift-up failure
Trouble code	C0206
Rank	B
Detection timing	The tray 3 upper limit sensor (PS116) is not blocked even after the set period of time has elapsed after the paper lift-up operation for the drawer began.
Trouble isolation	Tray 3
Relevant electrical parts	• Tray 3 lift-up motor (M113) • Tray 3 upper limit sensor (PS116) • PC control board (PCCB) • MFP board (MFPB)

(2) Procedure

Step	Action	Control signal	Location of electrical components
1	Check the connector between M113-PCCB CN6 for proper connection and correct as necessary.	-	-
2	Check the connector of M113 for proper drive coupling and correct as necessary.	-	-
3	Check the connector between PS116-relay CN24-PCCB CN4 for proper connection and correct as necessary.	-	-
4	PS116 I/O check, sensor check	PCCB CN4-3 (ON)	PC-110/PC-210 7-C
5	M113 operation check	PCCB CN6-8 to 9	PC-110/PC-210 2-C
6	Replace M113	-	-
7	Replace PCCB	-	-
8	Replace MFPB	-	-

- Link to the wiring diagram (N.2.3 PC-110)
- Link to the wiring diagram (N.2.4 PC-210)
- Link to the layout drawings for related parts by each trouble code (S.8. C0206)

3.5.9 C0208

(1) Contents

Trouble type	Tray 4 lift-up failure

Trouble code	C0208
Rank	B
Detection timing	The tray 4 upper limit sensor (PS126) is not blocked even after the set period of time has elapsed after the paper lift-up operation for the drawer began.
Trouble isolation	Tray 4
Relevant electrical parts	• Tray 4 lift-up motor (M123) • Tray 4 upper limit sensor (PS126) • PC control board (PCCB) • MFP board (MFPB)

(2) Procedure

Step	Action	Control signal	Location of electrical components
1	Check the connector between M123-PCCB CN8 for proper connection and correct as necessary.	-	-
2	Check the connector of M123 for proper drive coupling and correct as necessary.	-	-
3	Check the connector between PS126-relay CN47-PCCB CN7 for proper connection and correct as necessary.	-	-
4	PS126 I/O check, sensor check	PCCB CN7-3 (ON)	PC-210 8-K
5	M123 operation check	PCCB CN8-8 to 9	PC-210 5-K
6	Replace M123	-	-
7	Replace PCCB	-	-
8	Replace MFPB	-	-

- Link to the wiring diagram (N.2.4 PC-210)
- Link to the layout drawings for related parts by each trouble code (S.9. C0208)

3.5.10 C0210

(1) Contents

Trouble type	LCT lift failure
Trouble code	C0210
Rank	B
Detection timing	• The main tray upper limit sensor (PS136) is not blocked even after the set period of time has elapsed after the paper lift-up operation for the drawer began. • The shifter stop / lower limit position sensor (PS138) is not unblocked even after the set period of time has elapsed after the paper lift-up operation for the drawer began. • The main tray upper limit sensor (PS136) is not blocked even after the set period of time has elapsed after the paper lift-up operating. • The main tray upper limit sensor (PS136) is not unblocked even after the set period of time has elapsed after the paper lift-down operation began. • The shifter stop / lower limit position sensor (PS138) is not blocked even after the set period of time has elapsed after the paper lift-down operation began.
Trouble isolation	LCT
Relevant electrical parts	• Main tray upper limit sensor (PS136) • Shifter stop / lower limit position sensor (PS138) • Elevator motor (M134) • PC control board (PCCB)

(2) Procedure

Step	Action	Control signal	Location of electrical components
1	Check the connector between M134-PCCB CN10 for proper connection and correct as necessary.	-	-
2	Check the connector of M134 for proper drive coupling and correct as necessary.	-	-
3	Check the connector between PS136-relay CN1-PCCB CN4 for proper connection and correct as necessary.	-	-
4	Check the connector between PS138-relay CN16-PCCB CN14 for proper connection and correct as necessary.	-	-
5	PS136 I/O check, sensor check	PCCB CN4-3 (ON)	PC-410 8-J
6	PS138 I/O check, sensor check	PCCB CN14-6 (ON)	PC-410 4-J
7	M134 operation check	PCCB CN10-1 to 2	PC-410 6-J
8	Replace M134	-	-
9	PCCB IC2 conduction check	-	-

Step	Action	Control signal	Location of electrical components
10	Replace PCCB	-	-

- Link to the wiring diagram (N.2.5 PC-410)
- Link to the layout drawings for related parts by each trouble code (S.10. C0210)

3.5.11 C0211

(1) Contents

Trouble type	Manual feed up/down abnormality
Trouble code	C0211
Rank	B
Detection timing	• Paper does not unblock the bypass lift-up position sensor (PS26) even after the transport motor (M1) rotates for a given period of time after the position is switched from stand by position at lift-up plate to the feed position. • The bypass lift-up position sensor (PS26) is not blocked even after the transport motor (M1) rotates for a given period of time after the position is switched from stand by position at lift-up plate to the feed position.
Trouble isolation	Manual
Relevant electrical parts	• Transport motor (M1) • Bypass pick-up solenoid (SD1) • Bypass lift-up position sensor (PS26) • Printer control board (PRCB)

(2) Procedure

Step	Action	Control signal	Location of electrical components
1	Check the connector between M1-PRCB CN31 for proper connection and correct as necessary.	-	-
2	Check the connector of M1 for proper drive coupling and correct as necessary.	-	-
3	Check the connector between PS26-relay CN19-PRCB CN27 for proper connection and correct as necessary.	-	-
4	Check the connector between SD1-relay CN21-relay CN19-PRCB CN27 for proper connection and correct as necessary.	-	-
5	PS26 I/O check, sensor check	PRCB CN27-13 (ON)	4-C
6	SD1 operation check	PRCB CN27-10 (ON)	4-C
7	M1 operation check	PRCB CN31-2 (REM) PRCB CN31-5 (LOCK)	bizhub 364e 21-I to J bizhub 284e 23-I to J bizhub 224e 24-I to J
8	Replace M1	-	-
9	PRCB ICP5 conduction check	-	-
10	Replace PRCB	-	-

- Link to the wiring diagram (N.1. bizhub 364e/284e/224e)
- Link to the layout drawings for related parts by each trouble code (S.11. C0211)

3.5.12 C0214

(1) Contents

Trouble type	LCT shift failure
Trouble code	C0214
Rank	B
Detection timing	• The shifter stop / lower limit position sensor (PS138) is not blocked even after the set period of time has elapsed after the shift operation began (shift to the right). • The shifter home sensor (PS139) is not unblocked even after the set period of time has elapsed after the shift operation began (shift to the right). • The shifter stop / lower limit position sensor (PS138) is not unblocked even after the set period of time has elapsed after the return operation began (shift to the left). • The shifter home sensor (PS139) is not blocked even after the set period of time has elapsed after the return operation began (shift to the left).
Trouble isolation	LCT
Relevant electrical parts	• Shifter motor (M133) • Shifter stop / lower limit position sensor (PS138) • Shifter home sensor (PS139) • PC control board (PCCB)

(2) Procedure

Step	Action	Control signal	Location of electrical components
1	Check the connector between M133-PCCB CN10 for proper connection and correct as necessary.	-	-
2	Check the connector of M133 for proper drive coupling and correct as necessary.	-	-
3	Check the connector between PS138-relay CN16-PCCB CN14 for proper connection and correct as necessary.	-	-
4	Check the connector between PS139-relay CN16-PCCB CN14for proper connection and correct as necessary.	-	-
5	PS138 I/O check, sensor check	PCCB CN14-6 (ON)	PC-410 4-J
6	PS139 I/O check, sensor check	PCCB CN14-3 (ON)	PC-410 4-J
7	M133 operation check	PCCB CN10-3 to 4	PC-410 6-J
8	Replace M133	-	-
9	PCCB IC2 conduction check	-	-
10	Replace PCCB	-	-

- Link to the wiring diagram (N.2.5 PC-410)
- Link to the layout drawings for related parts by each trouble code (S.12. C0214)

3.6 C1###

3.6.1 C1004

(1) Contents

Trouble type	FNS communication error	
Trouble code	C1004	
Rank	C	
Detection timing	<When FS-533 or FS-534 is installed>	When the FS control board (FSCB) is receiving data, a communication error is detected.
	<When JS-506 is installed>	When the JS control board (JSCB) is receiving data, a communication error is detected.
Trouble isolation	-	
Relevant electrical parts	<When FS-533 or FS-534 is installed>	FS control board (FSCB)
	<When JS-506 is installed>	JS control board (JSCB)

(2) Procedure

When FS-533 or FS-534 is installed

Step	Action	Control signal	Location of electrical components
1	Turn OFF the main power switch, disconnect and then connect the power cord. Wait for 10 sec. or more after connect the power cord, and turn ON the main power switch.	-	-
2	Rewrite the firmware.	-	-
3	Replace FSCB (FS-533/FS-534)	-	-

- Link to the layout drawings for related parts by each trouble code (S.13. C1004, CC155)

When JS-506 is installed

Step	Action	Control signal	Location of electrical components
1	Turn OFF the main power switch, disconnect and then connect the power cord. Wait for 10 sec. or more after connect the power cord, and turn ON the main power switch.	-	-
2	Rewrite the firmware.	-	-
3	Replace JSCB	-	-

- Link to the layout drawings for related parts by each trouble code (S.13. C1004, CC155)

3.6.2 C1081

(1) Contents

Trouble type	SD communication error	
Trouble code	C1081	
Rank	C	
Detection timing	<When FS-534+SD-511 is installed>	When a communication error is detected between the FS control board (FSCB) and the SD control board (SDDB).

Trouble isolation	Half-Fold/Tri-Fold/Center Stapling
Relevant electrical parts	• SD drive board (SDDB) • FS control board (FSCB)

(2) Procedure

Step	Action	Control signal	Location of electrical components
1	Turn OFF the main power switch, disconnect and then connect the power cord. Wait for 10 sec. or more after connect the power cord, and turn ON the main power switch.	-	-
2	Rewrite the firmware.	-	-
3	Replace SDDB	-	-
4	Replace FSCB	-	-

- Link to the layout drawings for related parts by each trouble code (S.14. C1081)

3.6.3 C1102

(1) Contents

Trouble type	Main tray up/down motor's drive malfunction	
Trouble code	C1102	
Rank	B	
Detection timing	<When FS-533 is installed>	• While the exit tray is being lifted, the stapler movement motor (M107) is not unblocked after the set period of time has elapsed after the tray lift up motor (M109) is turned ON. • While the exit tray is being lowered, the stapler movement motor (M107) is not blocked after the set period of time has elapsed after the tray lift up motor (M109) is turned ON
	<When FS-534 is installed>	• While the exit tray is being lifted, the main tray upper position sensor (PS26/PS27) is not blocked and the main tray upper position detect switch (SW2) is not turned ON, even after the main tray up/down motor (M11) turns by the set number of times. • While the exit tray is being lowered, the main tray full detection sensor (PS29) is not blocked after the set period of time has elapsed after the main tray up/down motor (M11) is turned ON.
Trouble isolation	-	
Relevant electrical parts	<When FS-533 is installed>	• Tray lift up motor (M109) • Stapler movement motor (M107) • FS control board (FSCB)
	<When FS-534 is installed>	• Main tray up/down motor (M11) • Main tray upper position sensor/R (PS26) • Main tray upper position sensor/F (PS27) • Main tray full detection sensor (PS29) • Main tray upper position detect switch (SW2) • FS control board (FSCB)

(2) Procedure

When FS-533 is installed

Step	Action	Control signal	Location of electrical components
1	Check the connector between M109-FSCB CN108 for proper connection and correct as necessary.	-	-
2	Check the connector of M109 for proper drive coupling and correct as necessary.	-	-
3	Check the connector between PS107-FSCB CN110 for proper connection and correct as necessary.	-	-
4	PS107 I/O check, sensor check	FSCB CN110	FS-533 7-D to E
5	M109 operation check	FSCB CN108	FS-533 10-E
6	Replace M109	-	-
7	FSCB CP109 conduction check	-	-
8	Replace FSCB	-	-

- Link to the wiring diagram (N.2.6 FS-533)
- Link to the layout drawings for related parts by each trouble code (S.15.1 FS-533)

When FS-534 is installed

Step	Action	Control signal	Location of electrical components
1	Check the motor and sensor connectors for proper connection, and correct as necessary.	-	-
2	Check the connector of M11 for proper drive coupling, and correct as necessary.	-	-

Step	Action	Control signal	Location of electrical components
3	PS26 I/O check, sensor check	FSCB J14<A>-5 (ON)	FS-534 2-C
4	PS27 I/O check, sensor check	FSCB J14<B>-8 (ON)	FS-534 3-C
5	PS29 I/O check, sensor check	FSCB J14<A>-8 (ON)	FS-534 4-C
6	SW2 operation check	FSCB J10-1~2	FS-534 8-K
7	M11 operation check	FSCB J9<A>-9 to 10	FS-534 10-C to D
8	Replace M11	-	-
9	Replace FSCB	-	-

- Link to the wiring diagram (N.2.7 FS-534)
- Link to the layout drawings for related parts by each trouble code (S.15.2 FS-534)

3.6.4 C1103

(1) Contents

Trouble type	Alignment plate motor/Fr's malfunction	
Trouble code	C1103	
Rank	B	
Detection timing	<When FS-533 is installed>	• The alignment plate home sensor/F (PS108) is not unblocked after the set period of time has elapsed after the plate drive starts from the home position. • The alignment plate home sensor/F (PS108) is not blocked after the set period of time has elapsed after the alignment motor/F (M105) is turned ON to return the plate to the home position.
	<When FS-534 is installed>	• The alignment plate/F home sensor (PS12) is not unblocked after the set period of time has elapsed after the plate drive starts from the home position. • The alignment plate/F home sensor (PS12) is not blocked after the set period of time has elapsed after the alignment motor/front (M7) is turned ON to return the plate to the home position. • The alignment plate/F does not reach the specified position within the set period of time.
Trouble isolation	-	
Relevant electrical parts	<When FS-533 is installed>	• Alignment motor/F (M105) • Alignment plate home sensor/F (PS108) • FS control board (FSCB)
	<When FS-534 is installed>	• Alignment motor/Front (M7) • Alignment plate/F home sensor (PS12) • FS control board (FSCB)

(2) Procedure

When FS-533 is installed

Step	Action	Control signal	Location of electrical components
1	Check the connector between M105-FSCB CN102 for proper connection and correct as necessary.	-	-
2	Check the connector of M105 for proper drive coupling and correct as necessary.	-	-
3	Check the connector between PS108-FSCB CN102 for proper connection and correct as necessary.	-	-
4	PS108 I/O check, sensor check	FSCB CN102	FS-533 7-J
5	M105 operation check	FSCB CN102	FS-533 7-J
6	Replace M105	-	-
7	FSCB CP105 conduction check	-	-
8	Replace FSCB	-	-

- Link to the wiring diagram (N.2.6 FS-533)
- Link to the layout drawings for related parts by each trouble code (S.16.1 FS-533)

When FS-534 is installed

Step	Action	Control signal	Location of electrical components
1	Check the connector between M7-FSCB J4 for proper connection and correct as necessary.	-	-
2	Check the connector of M7 for proper drive coupling, and correct as necessary.	-	-
3	Check the connector between PS12-FSCB J4 for proper connection and correct as necessary.	-	-
4	PS12 I/O check, sensor check	FSCB J4<B>-4 (ON)	FS-534 13-C
5	M7 operation check	FSCB J4<A>-5 to 8	FS-534 11-C to D
6	Replace M7	-	-

Step	Action	Control signal	Location of electrical components
7	Replace FSCB	-	-

- Link to the wiring diagram (N.2.7 FS-534)
- Link to the layout drawings for related parts by each trouble code (S.16.2 FS-534)

3.6.5 C1105

(1) Contents

Trouble type	Bundle eject motor's drive malfunction	
Trouble code	C1105	
Rank	B	
Detection timing	<When FS-534 is installed>	• The gripper home position sensor (PS18) does not block even after the set period of time has elapsed after the gripper position detection sensor (PS19) unblocked. • The gripper position detection sensor (PS19) does not block even after the set period of time has elapsed after it unblock • The gripper position detection sensor (PS19) does not block even after the set period of time has elapsed after the gripper home position sensor (PS18) unblocked. • The gripper home position sensor (PS18) does not block even after the set period of time has elapsed after the bundle eject motor (M10) unblocked. • The gripper home position sensor (PS18) and the gripper position detection sensor (PS19) are blocked at the same time.
Trouble isolation	-	
Relevant electrical parts	• Bundle eject motor (M10) • Gripper home position sensor (PS18) • Gripper position detection sensor (PS19) • FS control board (FSCB)	

(2) Procedure

Step	Action	Control signal	Location of electrical components
1	Check the motor and sensor connectors for proper connection, and correct as necessary.	-	-
2	Check the connector of M10 for proper drive coupling, and correct as necessary.	-	-
3	PS18 I/O check, sensor check	FSCB J13-13 (ON)	FS-534 7-C
4	PS19 I/O check, sensor check	FSCB J12-3 (ON)	FS-534 7-C
5	M10 operation check	FSCB J13-1 to 2	FS-534 8-C to D
6	Replace M10	-	-
7	Replace FSCB	-	-

- Link to the wiring diagram (N.2.7 FS-534)
- Link to the layout drawings for related parts by each trouble code (S.17. C1105)

3.6.6 C1106

(1) Contents

Trouble type	Stapler movement motor's malfunction	
Trouble code	C1106	
Rank	B	
Detection timing	<When FS-533 is installed>	• The stapler home sensor (PS110) is not unblocked after the laps of given time after it started operating from the home position. • The stapler home sensor (PS110) is not unblocked after the laps of give time after the stapler movement motor (M107) turned ON when it returned to the home position.
	<When FS-534 is installed>	• The stapler home position sensor (Rear) (PS23) is not blocked or unblocked even after the set period of time has elapsed after the side stapler movement motor (M13) turned ON. • The stapler does not reach the specified position within the set period of time.
Trouble isolation	Staple	
Relevant electrical parts	<When FS-533 is installed>	• Stapler movement motor (M107) • Stapler home sensor (PS110) • Stapler relay board (STREYB) • FS control board (FSCB)
	<When FS-534 is installed>	• Side stapler movement motor (M13) • Stapler home position sensor (Rear) (PS23) • FS control board (FSCB)

(2) Procedure

When FS-533 is installed

Step	Action	Control signal	Location of electrical components
1	Check the connector between M107-STREYB CN123 for proper connection, and correct as necessary.	-	-
2	Check the connector of M107 for proper drive coupling, and correct as necessary.	-	-
3	Check the connector between PS110-FSCB CN110 for proper connection, and correct as necessary.	-	-
4	PS110 I/O check, sensor check	FSCB CN110	FS-533 8-D to E
5	M107 operation check	STREYB CN123-5 to 8	FS-533 5-L
6	Replace M107	-	-
7	Replace STREYB	-	-
8	FSCB CP107 conduction check	-	-
9	Replace FSCB	-	-

- Link to the wiring diagram (N.2.6 FS-533)
- Link to the layout drawings for related parts by each trouble code (S.18.1 FS-533)

When FS-534 is installed

Step	Action	Control signal	Location of electrical components
1	Check the connector between M13-relay CN3-FSCB J11 for proper connection, and correct as necessary.	-	-
2	Check the connector of M13 for proper drive coupling, and correct as necessary.	-	-
3	Check the connector between PS23-relay CN3-FSCB J11 for proper connection, and correct as necessary.	-	-
4	PS23 I/O check, sensor check	FSCB J11<B>-3 (ON)	FS-534 4-C
5	M13 operation check	FSCB J11<A>-1 to 4	FS-534 4-C to D
6	Replace M13	-	-
7	Replace FSCB	-	-

- Link to the wiring diagram (N.2.7 FS-534)
- Link to the layout drawings for related parts by each trouble code (S.18.2 FS-534)

3.6.7 C1109

(1) Contents

Trouble type	Stapler motor's drive malfunction	
Trouble code	C1109	
Rank	B	
Detection timing	<When FS-533 is installed>	The stapler home sensor (PS110) is not blocked even after the set period of time has elapsed after the stapler motor turned ON.
	<When FS-534 is installed>	• The stapler home position sensor (Rear) (PS23) is not blocked or unblocked even after the set period of time has elapsed after the stapler motor (M14) turned ON. • The stapler position sensor (Center) (PS24) is blocked, when the stapler motor (M14) is running.
Trouble isolation	Staple	
Relevant electrical parts	<When FS-533 is installed>	• Stapler home sensor (PS110) • Stapler unit • Stapler relay board (STREYB) • FS control board (FSCB)
	<When FS-534 is installed>	• Stapler home position sensor (Rear) (PS23) • Stapler unit • Stapler position sensor (Center) (PS24) • FS control board (FSCB)

(2) Procedure

When FS-533 is installed

Step	Action	Control signal	Location of electrical components
1	Check the connector between the stapler unit-STREYB CN122 and CN123 for proper connection and correct as necessary.	-	-
2	Check the connector of the stapler unit for proper drive coupling and correct as necessary.	-	-
3	Check the connector between PS110-FSCB CN110 for proper connection and correct as necessary.	-	-
4	PS110 I/O check, sensor check	FSCB CN110	FS-533 8-D to E

Step	Action	Control signal	Location of electrical components
5	Replace the stapler unit	-	-
6	Replace STREYB	-	-
7	Replace FSCB	-	-

- Link to the wiring diagram (N.2.6 FS-533)
- Link to the layout drawings for related parts by each trouble code (S.19.1 FS-533)

When FS-534 is installed

Step	Action	Control signal	Location of electrical components
1	Check the connector between the stapler unit-relay CN4-FSCB J11 for proper connection and correct as necessary.	-	-
2	Check the connector of the stapler unit for proper drive coupling, and correct as necessary.	-	-
3	Check the connector between PS23-relay CN3-FSCB J11 for proper connection and correct as necessary.	-	-
4	Check the connector between PS24-relay CN3-FSCB J11 for proper connection and correct as necessary.	-	-
5	PS23 I/O check, sensor check	FSCB J11<B>-3 (ON)	FS-534 4-C
6	PS24 I/O check, sensor check	FSCB J11<B>-6 (ON)	FS-534 4 to 5-C
7	Replace the stapler unit	-	-
8	Replace FSCB	-	-

- Link to the wiring diagram (N.2.7 FS-534)
- Link to the layout drawings for related parts by each trouble code (S.19.2 FS-534)

3.6.8 C1112

(1) Contents

Trouble type	Stapler motor's malfunction	
Trouble code	C1112	
Rank	B	
Detection timing	<When FS-534+SD-511 is installed>	• The stapler home sensor is not turned ON even after the set period of time has elapsed while the stapler motor is energized. • The stapler home sensor is not turned OFF even after the set period of time has elapsed after the stapler home sensor is turned ON.
Trouble isolation	• Staple • Half-Fold/Tri-Fold Center Stapling	
Relevant electrical parts	• Staple unit • SD drive board (SDDB) • FS control board (FSCB)	

(2) Procedure

Step	Action	Control signal	Location of electrical components
1	Check the connector between the staple unit-SDDB J4 for proper connection and correct as necessary.	-	-
2	Check the connector of the staple unit for proper drive coupling and correct as necessary.	-	-
3	Replace the staple unit	-	-
4	Replace SDDB	-	-
5	Replace FSCB	-	-

- Link to the layout drawings for related parts by each trouble code (S.20. C1112)

3.6.9 C1113

(1) Contents

Trouble type	Center-staple lead edge stopper motor malfunction	
Trouble code	C1113	
Rank	B	
Detection timing	<When FS-534+SD-511 is installed>	The stopper home sensor (PS6) is not blocked or unblocked even after the set period of time has elapsed after the stopper drive motor (M4) is turned ON.
Trouble isolation	• Staple • Half-Fold/Tri-Fold Center Stapling	

Relevant electrical parts	• Stopper drive motor (M4) • Stopper home sensor (PS6) • SD drive board (SDDB) • FS control board (FSCB)

(2) Procedure

Step	Action	Control signal	Location of electrical components
1	Check the connector between M4-SDDB J10 for proper connection and correct as necessary.	-	-
2	Check the connector of M4 for proper drive coupling, and correct as necessary.	-	-
3	Check the connector between PS6-SDDB J10 for proper connection, and correct as necessary.	-	-
4	PS6 I/O check, sensor check	SDDB J10-5 (ON)	SD-511 2-G
5	M4 operation check	SDDB J10-6 to 9	SD-511 1 to 2-F to G
6	Replace M4	-	-
7	Replace SDDB	-	-
8	Replace FSCB	-	-

- Link to the wiring diagram (N.2.8 SD-511)
- Link to the layout drawings for related parts by each trouble code (S.21. C1113)

3.6.10 C1114

(1) Contents

Trouble type	Center-staple front adjust drive motor malfunction	
Trouble code	C1114	
Rank	B	
Detection timing	<When FS-534+SD-511 is installed>	The alignment home sensor (PS4) is not blocked or unblocked even after the set period of time has elapsed after the alignment motor (M3) is turned ON.
Trouble isolation	Half-Fold/Tri-Fold Center Stapling	
Relevant electrical parts	• Alignment motor (M3) • Alignment home sensor (PS4) • SD drive board (SDDB) • FS control board (FSCB)	

(2) Procedure

Step	Action	Control signal	Location of electrical components
1	Check the connector between M3-relay CN10-SDDB J7 for proper connection and correct as necessary.	-	-
2	Check the connector of M3 for proper drive coupling, and correct as necessary.	-	-
3	Check the connector between PS4-relay CN10-SDDB J7 for proper connection, and correct as necessary.	-	-
4	PS4 I/O check, sensor check	SDDB J7-6 (ON)	SD-511 6-F
5	M3 operation check	SDDB J7-7 to 10	SD-511 5-F to G
6	Replace M3	-	-
7	Replace SDDB	-	-
8	Replace FSCB	-	-

- Link to the wiring diagram (N.2.8 SD-511)
- Link to the layout drawings for related parts by each trouble code (S.22. C1114)

3.6.11 C1115

(1) Contents

Trouble type	Center-staple knife drive motor malfunction	
Trouble code	C1115	
Rank	B	
Detection timing	<When FS-534+SD-511 is installed>	The center fold knife home sensor (PS8) is not blocked or unblocked even after the set period of time has elapsed after the center fold knife motor (M9) is turned ON.
Trouble isolation	Half-Fold/Tri-Fold Center Stapling	

Relevant electrical parts	• Center fold knife motor (M9) • Center fold knife home sensor (PS8) • SD drive board (SDDB) • FS control board (FSCB)

(2) Procedure

Step	Action	Control signal	Location of electrical components
1	Check the connector between M9-SDDB J11 for proper connection and correct as necessary.	-	-
2	Check the connector of M9 for proper drive coupling, and correct as necessary.	-	-
3	Check the connector between PS8-relay CN10-SDDB J7 for proper connection, and correct as necessary.	-	-
4	PS8 I/O check, sensor check	SDDB J7-3 (ON)	SD-511 6-G
5	M9 operation check	SDDB J11-11 to 20	SD-511 1 to 2-B
6	Replace M9	-	-
7	Replace SDDB	-	-
8	Replace FSCB	-	-

- Link to the wiring diagram (N.2.8 SD-511)
- Link to the layout drawings for related parts by each trouble code (S.23. C1115)

3.6.12 C1132

(1) Contents

Trouble type	Punch drive motor's malfunction	
Trouble code	C1132	
Rank	B	
Detection timing	<When FS-533+PK-519 is installed>	• The puncher drive cam sensor (PS203) or puncher home sensor (PS204) is not blocked or unblocked even after the set period of time has elapsed while the punch motor (M201) is energized. • The punch motor sensor (PS202) does not turn ON after the punch motor (M201) stopped. • The holes with other marketing area is set in [Service Mode] -> [Finisher] -> [Punch Option Setting]
	<When FS-534+PK-520 is installed>	The punch home sensor (PS1) is not blocked or unblocked even after the set period of time has elapsed while the punch drive motor (M1) is energized.
Trouble isolation	-	
Relevant electrical parts	<When FS-533+PK-519 is installed>	• Punch motor (M201) • Punch motor sensor (PS202) • Puncher drive cam sensor (PS203) • Puncher home sensor (PS204) • PK control board (PKCB) • FS control board (FSCB)
	<When FS-534+PK-520 is installed>	• Punch drive motor (M1) • Punch home sensor (PS1) • FS control board (FSCB)

(2) Procedure

When FS-533+PK-519 is installed

Step	Action	Control signal	Location of electrical components
1	Check the number of the holes in [Service Mode] -> [Finisher] -> [Punch Option Setting]	-	-
2	Check the connector between M201-PKCB CN203 for proper connection, and correct as necessary.	-	-
3	Check the connector of M201 for proper drive coupling, and correct as necessary.	-	-
4	Check the connector between PS202-PKCB CN204 for proper connection, and correct as necessary.	-	-
5	Check the connector between PS203-PKCB CN204 for proper connection, and correct as necessary.	-	-
6	Check the connector between PS204-PKCB CN204 for proper connection, and correct as necessary.	-	-
7	PS202 I/O check, sensor check	PKCB CN204	FS-533 (PK-519) 5-C
8	PS203 I/O check, sensor check	PKCB CN204	FS-533 (PK-519) 6-C
9	PS204 I/O check, sensor check	PKCB CN204	FS-533 (PK-519) 6-C
10	M201 operation check	PKCB CN203-1 to 2	FS-533 (PK-519) 4-C

Step	Action	Control signal	Location of electrical components
11	Replace M201	-	-
12	PKCB F201 conduction check	-	-
13	Replace PKCB	-	-
14	Replace FSCB	-	-

- Link to the wiring diagram (N.2.6 FS-533)
- Link to the layout drawings for related parts by each trouble code (S.24.1 FS-533/PK-519)

When FS-534+PK-520 is installed

Step	Action	Control signal	Location of electrical components
1	Check the connector between M1-relay CN351-FSCB J7 for proper connection, and correct as necessary.	-	-
2	Check the connector of M1 for proper drive coupling, and correct as necessary.	-	-
3	Check the connector between PS1-FSCB J7 for proper connection, and correct as necessary.	-	-
4	PS1 I/O check, sensor check	FSCB J7-5 (ON)	FS-534 (PK-520) 7-K
5	M1 operation check	FSCB J7-7 to 8	FS-534 (PK-520) 7-K
6	Replace M1	-	-
7	Replace FSCB	-	-

- Link to the wiring diagram (N.2.7 FS-534)
- Link to the layout drawings for related parts by each trouble code (S.24.2 FS-534/PK-520)

3.6.13 C1140

(1) Contents

Trouble type	Alignment plate motor/Rr's malfunction	
Trouble code	C1140	
Rank	B	
Detection timing	<When FS-533 is installed>	• The alignment plate home sensor/R (PS109) is not unblocked after the set period of time has elapsed after the plate drive starts from the home position. • The alignment plate home sensor/R (PS109) is not blocked after the set period of time has elapsed when the plate returns to the home position.
	<When FS-534 is installed>	The alignment plate/R home sensor (PS13) is not blocked or unblocked even after the set period of time has elapsed while the alignment motor/Rr (M8) is energized.
Trouble isolation	-	
Relevant electrical parts	<When FS-533 is installed>	• Alignment motor/R (M106) • Alignment plate home sensor/R (PS109) • FS control board (FSCB)
	<When FS-534 is installed>	• Alignment motor/Rear (M8) • Alignment plate/R home sensor (PS13) • FS control board (FSCB)

(2) Procedure

When FS-533 is installed

Step	Action	Control signal	Location of electrical components
1	Check the connector between M106-FSCB CN102 for proper connection and correct as necessary.	-	-
2	Check the connector of M106 for proper drive coupling and correct as necessary.	-	-
3	Check the connector between PS109-relay CN106-FSCB CN102 for proper connection and correct as necessary.	-	-
4	PS109 I/O check, sensor check	FSCB CN102	FS-533 7-J
5	M106 operation check	FSCB CN102	FS-533 8-J
6	Replace M106	-	-
7	FSCB CP105 conduction check	-	-
8	Replace FSCB	-	-

- Link to the wiring diagram (N.2.6 FS-533)
- Link to the layout drawings for related parts by each trouble code (S.25.1 FS-533)

When FS-534 is installed

Step	Action	Control signal	Location of electrical components
1	Check the connector between M8-FSCB J12 for proper connection, and correct as necessary.	-	-

Step	Action	Control signal	Location of electrical components
2	Check the connector of M8 for proper drive coupling, and correct as necessary.	-	-
3	Check the connector between PS13-FSCB J9 for proper connection, and correct as necessary.	-	-
4	PS13 I/O check, sensor check	FSCB J9<B>-9 (ON)	FS-534 9-C
5	M8 operation check	FSCB J12-13 to 16	FS-534 5 to 6-C to D
6	Replace M8	-	-
7	Replace FSCB	-	-

- Link to the wiring diagram (N.2.7 FS-534)
- Link to the layout drawings for related parts by each trouble code (S.25.2 FS-534)

3.6.14 C1141

(1) Contents

Trouble type	Paddle motor's drive malfunction	
Trouble code	C1141	
Rank	B	
Detection timing	<When FS-534 is installed>	The upper paddle homeposition detection sensor (PS14) is not blocked or unblocked even after the set period of time has elapsed while the FNS paddle motor (M5) is turning.
Trouble isolation	Staple	
Relevant electrical parts	• FNS paddle motor (M5) • Upper paddle home position detection sensor (PS14) • FS control board (FSCB)	

(2) Procedure

Step	Action	Control signal	Location of electrical components
1	Check the connector between M5-FSCB J4 for proper connection, and correct as necessary.	-	-
2	Check the connector of M5 for proper drive coupling, and correct as necessary.	-	-
3	Check the connector between PS14-FSCB J4 for proper connection, and correct as necessary.	-	-
4	PS14 I/O check, sensor check	FSCB J4<B>-7 (ON)	FS-534 13-C
5	M5 operation check	FSCB J4<A>-5 to 8	FS-534 12-C to D
6	Replace M5	-	-
7	Replace FSCB	-	-

- Link to the wiring diagram (N.2.7 FS-534)
- Link to the layout drawings for related parts by each trouble code (S.26. C1141)

3.6.15 C1144

(1) Contents

Trouble type	Pre-eject drive motor's malfunction	
Trouble code	C1144	
Rank	B	
Detection timing	<When FS-534 is installed>	• The pre-eject home sensor (PS21) is not blocked or unblocked even after the set period of time has elapsed after the pre-eject drive motor (M9) is turned ON. • The pre-eject away sensor (PS22) is not blocked or unblocked even after the set period of time has elapsed after the pre-eject drive motor (M9) is turned ON.
Trouble isolation	-	
Relevant electrical parts	• Pre-eject drive motor (M9) • Pre-eject home sensor (PS21) • Pre-eject away sensor (PS22) • FS control board (FSCB)	

(2) Procedure

Step	Action	Control signal	Location of electrical components
1	Check the connector between M9-relay CN7<A>-FSCB J13 for proper connection, and correct as necessary.	-	-
2	Check the connector of M9 for proper drive coupling, and correct as necessary.	-	-

Step	Action	Control signal	Location of electrical components
3	Check the connector between PS21-relay CN8-relay CN7<B>-FSCB J12 for proper connection, and correct as necessary.	-	-
4	Check the connector between PS22-relay CN8-relay CN7<B>-FSCB J12 for proper connection, and correct as necessary.	-	-
5	PS21 I/O check, sensor check	FSCB J12-6 (ON)	FS-534 6-C
6	PS22 I/O check, sensor check	FSCB J12-9 (ON)	FS-534 6-C
7	M9 operation check	FSCB J13-3 to 4	FS-534 8-C to D
8	Replace M9	-	-
9	Replace FSCB	-	-

- Link to the wiring diagram (N.2.7 FS-534)
- Link to the layout drawings for related parts by each trouble code (S.27. C1144)

3.6.16 C1145

(1) Contents

Trouble type	Trailing edge stopper motor's malfunction	
Trouble code	C1145	
Rank	B	
Detection timing	<When FS-534 is installed>	The trailing edge stopper home position detection sensor (PS20) is not blocked or unblocked even after the set period of time has elapsed after the trailing edge stopper motor (M6) is turned ON.
Trouble isolation	-	
Relevant electrical parts	• Trailing edge stopper motor (M6) • Trailing edge stopper home position detection sensor (PS20) • FS control board (FSCB)	

(2) Procedure

Step	Action	Control signal	Location of electrical components
1	Check the connector between M6-FSCB J5 for proper connection, and correct as necessary.	-	-
2	Check the connector of M6 for proper drive coupling, and correct as necessary.	-	-
3	Check the connector between PS20-relay CN22-FSCB J5 for proper connection, and correct as necessary.	-	-
4	PS20 I/O check, sensor check	FSCB J5-9 (ON)	FS-534 9-K
5	M6 operation check	FSCB J5-13 to 16	FS-534 9-K
6	Replace M6	-	-
7	Replace FSCB	-	-

- Link to the wiring diagram (N.2.7 FS-534)
- Link to the layout drawings for related parts by each trouble code (S.28. C1145)

3.6.17 C1156

(1) Contents

Trouble type	Center-staple paddle roller motor's malfunction (trailing edge)	
Trouble code	C1156	
Rank	B	
Detection timing	<When FS-534+SD-511 is installed>	The paddle home sensor (PS5) is not blocked or unblocked even after the set period of time has elapsed while the SD paddle motor (M7) is energized.
Trouble isolation	Half-Fold/Tri-Fold Center Stapling	
Relevant electrical parts	• SD paddle motor (M7) • Paddle home sensor (PS5) • SD drive board (SDDB) • FS control board (FSCB)	

(2) Procedure

Step	Action	Control signal	Location of electrical components
1	Check the connector between M7-SDDB J8 for proper connection and correct as necessary.	-	-
2	Check the connector of M7 for proper drive coupling, and correct as necessary.	-	-

Step	Action	Control signal	Location of electrical components
3	Check the connector between PS5-SDDB J8 for proper connection and correct as necessary.	-	-
5	PS5 I/O check, sensor check	SDDB J8-3 (ON)	SD-511 3 to 4-G
7	M7 operation check	SDDB J8-4 to 7	SD-511 3-F to G
8	Replace M7	-	-
9	Replace SDDB	-	-
10	Replace FSCB	-	-

- Link to the wiring diagram (N.2.8 SD-511)
- Link to the layout drawings for related parts by each trouble code (S.29. C1156)

3.6.18 C1182

(1) Contents

Trouble type	Shift motor drive malfunction	
Trouble code	C1182	
Rank	B	
Detection timing	<When JS-506 is installed>	• The tray shift home sensor (PS1) is not unblocked after the set period of time has elapsed after the tray shift motor (M1) is turned ON (start of moving to the home position.) • The tray shift home sensor (PS1) is not blocked after the set period of time has elapsed after the tray shift motor (M1) is turned ON (start of moving to the shift position.)
Trouble isolation	Staple	
Relevant electrical parts	• Tray shift motor (M1) • Tray shift home sensor (PS1) • JS control board (JSCB)	

(2) Procedure

Step	Action	Control signal	Location of electrical components
1	Check the connector between M1-JSCB CN208 for proper connection and correct as necessary.	-	-
2	Check the connector of M1 for proper drive coupling, and correct as necessary.	-	-
3	Check the connector between PS1-JSCB CN208 for proper connection and correct as necessary.	-	-
4	PS1 I/O check, sensor check	JSCB CN208-5 (ON)	JS-506 5-C
5	M1 operation check	JSCB CN208-1 (DRV)	JS-506 4 to 5-C
6	Replace M1	-	-
7	JSCB ICP3 conduction check	-	-
8	Replace JSCB	-	-

- Link to the wiring diagram (N.2.9 JS-506)
- Link to the layout drawings for related parts by each trouble code (S.30. C1182)

3.6.19 C1184

(1) Contents

Trouble type	Paper discharge control motor's malfunction	
Trouble code	C1184	
Rank	B	
Detection timing	<When FS-534 is installed>	The paper delivery control sensor (PS28) is not blocked or unblocked even after the set period of time has elapsed while the paper receiving control motor (M12) is energized.
Trouble isolation	-	
Relevant electrical parts	• Paper receiving control motor (M12) • Paper delivery control sensor (PS28) • FS control board (FSCB)	

(2) Procedure

Step	Action	Control signal	Location of electrical components
1	Check the connector between M12-relay CN1-FRCB J14 for proper connection, and correct as necessary.	-	-
2	Check the connector of M12 for proper drive coupling, and correct as necessary.	-	-

Step	Action	Control signal	Location of electrical components
3	Check the connector between PS28-relay CN1-FRCB J14 for proper connection, and correct as necessary.	-	-
4	PS28 I/O check, sensor check	FSCB J14<B>-3 (ON)	FS-534 2~3-C
5	M12 operation check	FSCB J14<A>-9 to 12	FS-534 2-C to D
6	Replace M12	-	-
7	Replace FSCB	-	-

- Link to the wiring diagram (N.2.7 FS-534)
- Link to the layout drawings for related parts by each trouble code (S.31. C1184)

3.6.20 C1195

(1) Contents

Trouble type	Paper discharge control motor's malfunction	
Trouble code	C1195	
Rank	B	
Detection timing	<When FS-534+SD-511 is installed>	The curl cover detection sensor (PS2) is not blocked or unblocked even after the set period of time has elapsed after the paper discharge control motor (M2) is turned ON.
Trouble isolation	Staple	
Relevant electrical parts	• Paper discharge control motor (M2) • Curl cover detection sensor (PS2) • SD drive board (SDDB) • FS control board (FSCB)	

(2) Procedure

Step	Action	Control signal	Location of electrical components
1	Check the connector between M2-relay CN3-relay CN2-SDDB J5 for proper connection, and correct as necessary.	-	-
2	Check the connector of M2 for proper drive coupling, and correct as necessary.	-	-
3	Check the connector between PS2-relay CN3-relay CN2-SDDB J5 for proper connection, and correct as necessary.	-	-
4	PS2 I/O check, sensor check	SDDB J5-3 (ON)	SD-511 3-B
5	M2 operation check	SDDB J5-4 to 7	SD-511 3-B
6	Replace M2	-	-
7	Replace SDDB	-	-
8	Replace FSCB	-	-

- Link to the wiring diagram (N.2.8 SD-511)
- Link to the layout drawings for related parts by each trouble code (S.32. C1195)

3.6.21 C1196

(1) Contents

Trouble type	Center fold roller motor's malfunction	
Trouble code	C1196	
Rank	B	
Detection timing	<When FS-534+SD-511 is installed>	The guide home sensor (PS7) is not blocked or unblocked even after the set period of time has elapsed after the center fold roller motor (M8) is turned ON.
Trouble isolation	Half-Fold/Tri-Fold Center Stapling	
Relevant electrical parts	• Center fold roller motor (M8) • Guide home sensor (PS7) • SD drive board (SDDB) • FS control board (FSCB)	

(2) Procedure

Step	Action	Control signal	Location of electrical components
1	Check the connector between M8-SDDB J8 for proper connection, and correct as necessary.	-	-
2	Check the connector of M8 for proper drive coupling, and correct as necessary.	-	-
3	Check the connector between PS7-SDDB J9 for proper connection, and correct as necessary.	-	-

Step	Action	Control signal	Location of electrical components
4	PS7 I/O check, sensor check	SDDB J9-6 (ON)	SD-511 4-G
5	M8 operation check	SDDB J8-11 to 14	SD-511 2 to 3-F to G
6	Replace M8	-	-
7	Replace SDDB	-	-
8	Replace FSCB	-	-

- Link to the wiring diagram (N.2.8 SD-511)
- Link to the layout drawings for related parts by each trouble code (S.33. C1196)

3.6.22 C1197

(1) Contents

Trouble type	Tri-folding guide motor's malfunction	
Trouble code	C1197	
Rank	B	
Detection timing	<When FS-534+SD-511 is installed>	The tri-folding gate home sensor (PS11) is not blocked or unblocked even after the set period of time has elapsed while the tri-folding guide motor (M6) is energized.
Trouble isolation	Half-Fold/Tri-Fold Center Stapling	
Relevant electrical parts	• Tri-folding guide motor (M6) • Tri-folding gate home sensor (PS11) • SD drive board (SDDB) • FS control board (FSCB)	

(2) Procedure

Step	Action	Control signal	Location of electrical components
1	Check the connector between M6-SDDB J9 for proper connection, and correct as necessary.	-	-
2	Check the connector of M6 for proper drive coupling, and correct as necessary.	-	-
3	Check the connector between PS11-SDDB J8 for proper connection, and correct as necessary.	-	-
4	PS11 I/O check, sensor check	SDDB J8-10 (ON)	SD-511 3-G
5	M6 operation check	SDDB J9-7 to 10	SD-511 4-F to G
6	Replace M6	-	-
7	Replace SDDB	-	-
8	Replace FSCB	-	-

- Link to the wiring diagram (N.2.8 SD-511)
- Link to the layout drawings for related parts by each trouble code (S.34. C1197)

3.6.23 C11A1

(1) Contents

Trouble type	Exit roller pressure/ retraction malfunction	
Trouble code	C11A1	
Rank	B	
Detection timing	<When FS-533 is installed>	The pick up roller position sensor (PS105) is turned neither ON nor OFF even after the set period of time has elapsed after the exit roller lift up motor (M104) is turned ON.
Trouble isolation	-	
Relevant electrical parts	• Exit roller lift up motor (M104) • Pick up roller position sensor (PS105) • FS control board (FSCB)	

(2) Procedure

Step	Action	Control signal	Location of electrical components
1	Check the connector between M104-FSCB CN109 for proper connection and correct as necessary.	-	-
2	Check the connector of M104 for proper drive coupling, and correct as necessary.	-	-
3	Check the connector between PS105-FSCB CN110 for proper connection and correct as necessary.	-	-
4	PS105 I/O check, sensor check	FSCB CN110	FS-533 7-D to E
5	M104 operation check	FSCB CN109	FS-533 9-D to E
6	Replace M104	-	-

Step	Action	Control signal	Location of electrical components
7	FSCB CP104 conduction check	-	-
8	Replace FSCB	-	-

- Link to the wiring diagram (N.2.6 FS-533)
- Link to the layout drawings for related parts by each trouble code (S.35. C11A1)

3.6.24 C11A2

(1) Contents

Trouble type	Accommodation roller pressure/ retraction malfunction	
Trouble code	C11A2	
Rank	B	
Detection timing	<When FS-534 is installed>	The receiving roller retraction sensor (PS11) is not blocked or unblocked even after the set period of time has elapsed after the receiving roller retraction motor (M4) is turned ON.
Trouble isolation	Half-Fold/Tri-Fold Center Stapling	
Relevant electrical parts	• Receiving roller retraction motor (M4) • Receiving roller retraction sensor (PS11) • FS control board (FSCB)	

(2) Procedure

Step	Action	Control signal	Location of electrical components
1	Check the connector between M4-FSCB J4 for proper connection and correct as necessary.	-	-
2	Check the connector of M4 for proper drive coupling, and correct as necessary.	-	-
3	Check the connector between PS11-FSCB J4 for proper connection, and correct as necessary.	-	-
4	PS11 I/O check, sensor check	FSCB J4<B>-16 (ON)	FS-534 13-C
5	M4 operation check	FSCB J4<A>-1 to 4	FS-534 11-C to D
6	Replace M4	-	-
7	Replace FSCB	-	-

- Link to the wiring diagram (N.2.7 FS-534)
- Link to the layout drawings for related parts by each trouble code (S.36. C11A2)

3.6.25 C11E1

(1) Contents

Trouble type	Paper exit switching drive malfunction	
Trouble code	C11E1	
Rank	B	
Detection timing	<When FS-534 is installed>	The exchange folded knife home position sensor (PS30) is not blocked or unblocked even after the set period of time has elapsed after the FNS entry transport motor (M2) is turned ON.
Trouble isolation	-	
Relevant electrical parts	• FNS entry transport motor (M2) • Exchange folded knife home position sensor (PS30) • FS control board (FSCB)	

(2) Procedure

Step	Action	Control signal	Location of electrical components
1	Check the connector between M2-FSCB J9 for proper connection and correct as necessary.	-	-
2	Check the connector of M2 for proper drive coupling, and correct as necessary.	-	-
3	Check the connector between PS30-FSCB J4 for proper connection, and correct as necessary.	-	-
4	PS30 I/O check, sensor check	FSCB J4<A>-15 (ON)	FS-534 12-C
5	M2 operation check	FSCB J9<A>-1 to 4	FS-534 10 to 11-B to C
6	Replace M2	-	-
7	Replace FSCB	-	-

- Link to the wiring diagram (N.2.7 FS-534)
- Link to the layout drawings for related parts by each trouble code (S.37. C11E1)

3.6.26 C1402

(1) Contents

Trouble type	FS nonvolatile memory error	
Trouble code	C1402	
Rank	C	
Detection timing	<When FS-533 is installed>	When the main power switch is turned ON, malfunctioning of the nonvolatile memory on the FS control board (FSCB) is detected.
Trouble isolation	-	
Relevant electrical parts	FS control board (FSCB)	

(2) Procedure

Step	Action	Control signal	Location of electrical components
1	Disconnect and then connect the power cord. Turn OFF the main power switch, wait for 10 sec. or more, and turn ON the main power switch.	-	-
2	Rewrite the firmware.	-	-
3	Replace FSCB	-	-

- Link to the layout drawings for related parts by each trouble code (S.38. C1402)

3.7 C2###

3.7.1 C2355

(1) Contents

Trouble type	Transfer belt cleaner cooling fan's failure to turn
Trouble code	C2355
Rank	B
Detection timing	The fan lock signal remains HIGH for a predetermined continuous period of time while the fan is turning.
Trouble isolation	-
Relevant electrical parts	• Transfer belt cleaner cooling fan (FM2) • Printer control board (PRCB)

(2) Procedure

Step	Action	Control signal	Location of electrical components
1	Check the connector between FM2-relay CN115-PRCB CN13 for proper connection and correct as necessary.	-	-
2	Check the fan for possible overload and correct as necessary.	-	-
3	FM2 operation check	PRCB CN13-8 (REM) PRCB CN13-10 (LOCK)	23-C
4	Replace FM2	-	-
5	PRCB ICP3 conduction check	-	-
6	Replace PRCB	-	-

- Link to the wiring diagram (N.1. bizhub 364e/284e/224e)
- Link to the layout drawings for related parts by each trouble code (S.39. C2355)

3.7.2 C2414

(1) Contents

Trouble type	Developing unit new article release
Trouble code	C2414
Rank	B
Detection timing	The status with the new unit is not cleared after the new developing unit is set.
Trouble isolation	-
Relevant electrical parts	• Developing unit • Front side board (FRB) • Printer control board (PRCB)

(2) Procedure

Step	Action	Control signal	Location of electrical components
1	Reinstall developing unit	-	-
2	Check the connector between developing unit-FRB CN13 for proper connection and correct as necessary.	-	-

Step	Action	Control signal	Location of electrical components
3	Check the connector between FRB CN1, CN3-PRCB CN7, CN9 for proper connection and correct as necessary.	-	-
4	Replace the developing unit	-	-
5	Replace FRB	-	-
6	Replace PRCB	-	-

- Link to the layout drawings for related parts by each trouble code (S.40. C2414, C2558, C2564)

3.7.3 C2557

(1) Contents

Trouble type	Abnormally low toner density detected black TCR sensor
Trouble code	C2557
Rank	B
Detection timing	When sampling data is determined in TC ratio calculation control, TCR sensor output is higher than a predetermined value for a predetermined number of times in a row even though there is toner in the sub hopper
Trouble isolation	-
Relevant electrical parts	• Developing unit • Toner cartridge • Toner empty switch/K (PS31) • Toner bottle motor (M10) • Toner supply motor/K (M6) • Front side board (FRB) • Printer control board (PRCB)

(2) Procedure

Step	Action	Control signal	Location of electrical components
1	Perform image troubleshooting procedure if image density is low.	-	-
2	Reinstall developing unit	-	-
3	Reinstall toner cartridge	-	-
4	Check the connector between developing unit-FRB CN13 for proper connection and correct as necessary.	-	-
5	Check the connector between FRB CN1, CN3-PRCB CN7, CN9 for proper connection and correct as necessary.	-	-
6	M10 operation check	PRCB CN14-1 to 4	19-C
7	M6 operation check	PRCB CN14-5 to 8	19-C
8	If the toner empty sensor and its surroundings inside the sub hopper are dirtied with toner, clean them.	-	-
9	Replace the developing unit	-	-
10	Replace FRB	-	-
11	Replace PRCB	-	-

- Link to the wiring diagram (N.1. bizhub 364e/284e/224e)
- Link to the layout drawings for related parts by each trouble code (S.41. C2557)

3.7.4 C2558

(1) Contents

Trouble type	Abnormally high toner density detected black TCR sensor
Trouble code	C2558
Rank	B
Detection timing	The TC ratio of the toner determined by the toner replenishment control is detected to be the predetermined value or over for consecutive times.
Trouble isolation	-
Relevant electrical parts	• Developing unit • Toner cartridge • Front side board (FRB) • Printer control board (PRCB)

(2) Procedure

Step	Action	Control signal	Location of electrical components
1	Reinstall developing unit	-	-
2	Reinstall toner cartridge	-	-

Step	Action	Control signal	Location of electrical components
3	Check the connector between developing unit-FRB CN13 for proper connection and correct as necessary.	-	-
4	Check the connector between FRB CN1, CN3-PRCB CN7, CN9 for proper connection and correct as necessary.	-	-
5	Replace the developing unit	-	-
6	Replace FRB	-	-
7	Replace PRCB	-	-

- Link to the layout drawings for related parts by each trouble code (S.40. C2414, C2558, C2564)

3.7.5 C255C

(1) Contents

Trouble type	Black TCR sensor adjustment failure
Trouble code	C255C
Rank	B
Detection timing	TCR sensor automatic adjustment does not function properly, failing to adjust to an appropriate value.
Trouble isolation	-
Relevant electrical parts	• Developing unit • Toner bottle motor (M10) • Toner supply motor/K (M6) • Front side board (FRB) • Printer control board (PRCB)

(2) Procedure

Step	Action	Control signal	Location of electrical components
1	Reinstall developing unit	-	-
2	Check the connector between developing unit-FRB CN13 for proper connection and correct as necessary.	-	-
3	Check the connector between FRB CN1, CN3-PRCB CN7, CN9 for proper connection and correct as necessary.	-	-
4	M10 operation check	PRCB CN14-1 to 4	19-C
5	M6 operation check	PRCB CN14-5 to 8	19-C
6	Replace the developing unit	-	-
7	Replace FRB	-	-
8	Replace PRCB	-	-

- Link to the layout drawings for related parts by each trouble code (S.42. C255C)

3.7.6 C2564

(1) Contents

Trouble type	Black TCR sensor failure
Trouble code	C2564
Rank	B
Detection timing	TCR sensor automatic adjustment does not function properly, failing to adjust to an appropriate value.
Trouble isolation	-
Relevant electrical parts	• Developing unit • Front side board (FRB) • Printer control board (PRCB)

(2) Procedure

Step	Action	Control signal	Location of electrical components
1	Reinstall developing unit	-	-
2	Check the connector between developing unit-FRB CN13 for proper connection and correct as necessary.	-	-
3	Check the connector between FRB CN1, CN3-PRCB CN7, CN9 for proper connection and correct as necessary.	-	-
4	Replace the developing unit	-	-
5	Replace FRB	-	-
6	Replace PRCB	-	-

- Link to the layout drawings for related parts by each trouble code (S.40. C2414, C2558, C2564)

3.7.7 C2650

(1) Contents

Trouble type	Main backup media access error
Trouble code	C2650
Rank	C
Detection timing	• The re-written data, which has been read out, checked and founded as error, is read out again and found as error. • The error was found when reading out the counter value. • MFP detects that the SSD board is not mounted.
Trouble isolation	-
Relevant electrical parts	• SSD board (SSDB) • MFP board (MFPB) • Printer control board (PRCB)

(2) Procedure

Step	Action	Control signal	Location of electrical components
1	Check the connector from SSDB to MFPB for proper connection and correct as necessary.	-	-
2	Check the harness from MFPB to PRCB for proper connection and correct as necessary.	-	-
3	Replace MFPB	-	-
4	Replace PRCB 1. When the finisher or job separator has been installed, remove it once. 2. Check that the trouble code “C4802” appears and then display service mode. 3. Call the Enhanced Security to the screen. 4. Touch [Engine Data Backup]. 5. Touch [Engine Data Reflect Mode], and press the Start key. 6. Select [Yes], and press the Start key again. 7. Check that the result “OK” appears. 8. Turn OFF the main power switch and turn it ON again more than 10 seconds after. 9. Update the PRCB firmware. 10. Make the specified readjustments.	-	-
5	If the above actions do not solve the problem, contact KM	-	-

- Link to the layout drawings for related parts by each trouble code (S.43. C2650)

3.7.8 C2A14

(1) Contents

Trouble type	Drum unit new release failure
Trouble code	C2A14
Rank	B
Detection timing	The status with the new unit is not cleared after the new drum unit is set.
Trouble isolation	-
Relevant electrical parts	• Drum unit • Front side board (FRB) • Printer control board (PRCB)

(2) Procedure

Step	Action	Control signal	Location of electrical components
1	Clean the connection between the drum unit and the developing unit if dirty	-	-
2	Reinstall drum unit	-	-
3	Check the connector between drum unit-FRB CN12 for proper connection and correct as necessary.	-	-
4	Check the connector between FRB CN1, CN3-PRCB CN7, CN9 for proper connection and correct as necessary.	-	-
5	Replace the drum unit	-	-
6	Replace FRB	-	-
7	Replace PRCB	-	-

- Link to the layout drawings for related parts by each trouble code (S.44. C2A14)

3.8 C3###

3.8.1 C3101

(1) Contents

Trouble type	Fusing roller separation failure
Trouble code	C3101
Rank	B
Detection timing	• With the fusing roller being retracted, the fusing pressure home sensor (PS38) is not unblocked even after the specified period of time has passed after the fusing pressure motor (M11) started rotating. • With the fusing roller being pressed, the fusing pressure home sensor (PS38) is not blocked even after the specified period of time has passed after the fusing pressure motor (M11) started rotating.
Trouble isolation	-
Relevant electrical parts	• Fusing pressure motor (M11) • Fusing pressure home sensor (PS38) • Printer control board (PRCB) • Fusing unit

(2) Procedure

Step	Action	Control signal	Location of electrical components
1	Check the connector between M11-PRCB CN13 for proper connection and correct as necessary.	-	-
2	Check the connector between fusing unit-relay CN98, CN99, CN104-PRCB CN5 for proper connection and correct as necessary.	-	-
3	PS38 I/O check, sensor check	PRCB CN5-12 (ON)	26 to 27-C
4	M11 operation check	PRCB CN13-1 to 4	24-C
5	Replace M11	-	-
6	Replace the fusing unit	-	-
7	Replace PRCB	-	-

- Link to the wiring diagram (N.1. bizhub 364e/284e/224e)
- Link to the layout drawings for related parts by each trouble code (S.45. C3101)

3.8.2 C3201, C3202

(1) Contents

Trouble type	Fusing motor failure to turn
Trouble code	C3201
Rank	B
Detection timing	The motor lock signal remains HIGH for a predetermined continuous period of time while the motor is turning.
Trouble isolation	-
Relevant electrical parts	• Fusing motor (M3) • Printer control board (PRCB)

Trouble type	Fusing motor turning at abnormal timing
Trouble code	C3202
Rank	B
Detection timing	The motor lock signal remains LOW for a predetermined continuous period of time while the motor remains stationary.
Trouble isolation	-
Relevant electrical parts	• Fusing motor (M3) • Printer control board (PRCB)

(2) Procedure

Step	Action	Control signal	Location of electrical components
1	Check the connector between M3-PRCB CN2 for proper connection and correct as necessary.	-	-
2	Check the loading status of the fusing unit drive, and correct the error as necessary.	-	-
3	M3 operation check	PRCB CN2-9 (REM) PRCB CN2-12 (LOCK)	26-I to J
4	Replace M3	-	-
5	Replace PRCB	-	-

- Link to the wiring diagram (N.1. bizhub 364e/284e/224e)

- Link to the layout drawings for related parts by each trouble code (S.46. C3201, C3202)

3.8.3 C3302

(1) Contents

Trouble type	Paper cooling fan failure to turn
Trouble code	C3302
Rank	B
Detection timing	The fan lock signal remains HIGH for a predetermined continuous period of time while the fan is turning.
Trouble isolation	-
Relevant electrical parts	• Paper cooling fan (FM8) • Printer control board (PRCB)

(2) Procedure

Step	Action	Control signal	Location of electrical components
1	Check the connector between FM8-relay CN106-PRCB CN12 for proper connection and correct as necessary.	-	-
2	Check the fan for possible overload and correct as necessary.	-	-
3	FM8 operation check	PRCB CN12-1 (REM) PRCB CN12-3 (LOCK)	26-C
4	Replace FM8	-	-
5	PRCB ICP3 conduction check	-	-
6	Replace PRCB	-	-

- Link to the wiring diagram (N.1. bizhub 364e/284e/224e)
- Link to the layout drawings for related parts by each trouble code (S.47. C3302)

3.8.4 C3425

(1) Contents

Trouble type	Fusing warm-up trouble
Trouble code	C3425
Rank	A
Detection timing	• Detected temperature of the heating roller temperature sensor (TEMS) does not go up a given range of temperature even after a lapse of given period of time at warm up. • The warm-up is not completed even after the set period of time has elapsed after the warm-up is started. • Less than the predetermined temperature of the heating roller temperature sensor (TEMS), even after a predetermined period of time after warm-up is complete.
Trouble isolation	-
Relevant electrical parts	• Fusing unit • Heating roller temperature sensor (TEMS) • DC power supply (DCPU) • Printer control board (PRCB)

(2) Procedure

Step	Action	Control signal	Location of electrical components
1	Check the fusing unit for correct installation (whether it is secured in position).	-	-
2	Check the open/close operation of the right door.	-	-
3	Check the fusing unit, DCPU and PRCB for proper connection and correct or change as necessary.	-	-
4	Replace the fusing unit	-	-
5	Replace PRCB	-	-
6	Replace DCPU	-	-

- Link to the layout drawings for related parts by each trouble code (S.48. C3425)

3.8.5 C3722, C3725, C3726

(1) Contents

Trouble type	Fusing abnormally high temperature detection (Edge of the heating side)
Trouble code	C3722
Rank	A
Detection timing	Detected temperature of the heating roller thermistor/1 (TH1) goes beyond a given temperature for a given period of time consecutively.
Trouble isolation	-

Relevant electrical parts	• Fusing unit • Heating roller thermistor/1 (TH1) • Printer control board (PRCB)

Trouble type	Fusing abnormally high temperature detection (Main of the heating side)
Trouble code	C3725
Rank	A
Detection timing	• Detected temperature of the heating roller temperature sensor (TEMS) goes beyond a given temperature for a given period of time consecutively. • The hard protector signal error is detected for a given period of time consecutively.
Trouble isolation	-
Relevant electrical parts	• Fusing unit • Heating roller temperature sensor (TEMS) • Printer control board (PRCB)

Trouble type	Fusing abnormally high temperature detection (Center of the heating side)
Trouble code	C3726
Rank	A
Detection timing	Detected temperature of the heating roller thermistor/2 (TH2) goes beyond a given temperature for a given period of time consecutively.
Trouble isolation	-
Relevant electrical parts	• Fusing unit • Heating roller thermistor/2 (TH2) • Printer control board (PRCB)

(2) Procedure

Step	Action	Control signal	Location of electrical components
1	Check the fusing unit for correct installation (whether it is secured in position).	-	-
2	Check the open/close operation of the right door.	-	-
3	Check the fusing unit and PRCB for proper connection and correct or change as necessary.	-	-
4	Replace the fusing unit	-	-
5	Replace PRCB	-	-

- Link to the layout drawings for related parts by each trouble code (S.49. C3722, C3922)
- Link to the layout drawings for related parts by each trouble code (S.50. C3725, C3825, C3925)
- Link to the layout drawings for related parts by each trouble code (S.51. C3726, C3826)

3.8.6 C3825, C3826

(1) Contents

Trouble type	Fusing abnormally low temperature detection (Main of the heating roller)
Trouble code	C3825
Rank	A
Detection timing	The heating roller temperature sensor (TEMS) continues to detect a temperature lower than a predetermined one for a predetermined period of time.
Trouble isolation	-
Relevant electrical parts	• Fusing unit • Heating roller temperature sensor (TEMS) • Printer control board (PRCB)

Trouble type	Fusing abnormally low temperature detection (Center of the heating roller)
Trouble code	C3826
Rank	A
Detection timing	The heating roller thermistor/2 (TH2) continues to detect a temperature lower than a predetermined one for a predetermined period of time.
Trouble isolation	-
Relevant electrical parts	• Fusing unit • Heating roller thermistor/2 (TH2) • Printer control board (PRCB)

(2) Procedure

Step	Action	Control signal	Location of electrical components
1	Check the fusing unit for correct installation (whether it is secured in position).	-	-
2	Check the open/close operation of the upper right door.	-	-

Step	Action	Control signal	Location of electrical components
3	Check the fusing unit and PRCB for proper connection and correct or change as necessary.	-	-
4	Replace the fusing unit	-	-
5	PRCB ICP15 conduction check	-	-
6	Replace PRCB	-	-

- Link to the layout drawings for related parts by each trouble code (S.50. C3725, C3825, C3925)
- Link to the layout drawings for related parts by each trouble code (S.51. C3726, C3826)

3.8.7 C3922, C3925, C3926

(1) Contents

Trouble type	Fusing sensor wire breaks detection (Edge of the heating roller)
Trouble code	C3922
Rank	A
Detection timing	After a predetermined period of time after the warm-up stage is started, the heating roller thermistor/1 (TH1) voltage does not decrease by predetermined steps (temperature rise) within a predetermined period of time.
Trouble isolation	-
Relevant electrical parts	• Fusing unit • Heating roller thermistor/1 (TH1) • Printer control board (PRCB)

Trouble type	Fusing sensor wire breaks detection (Center of the heating roller)
Trouble code	C3925
Rank	A
Detection timing	After a predetermined period of time after the warm-up stage is started, the heating roller temperature sensor (TEMS) voltage does not increase by predetermined steps (temperature rise) within a predetermined period of time.
Trouble isolation	-
Relevant electrical parts	• Fusing unit • Heating roller temperature sensor (TEMS) • Printer control board (PRCB)

Trouble type	Fusing sensor wire breaks detection (Middle of the heating roller)
Trouble code	C3926
Rank	A
Detection timing	• After a predetermined period of time after the warm-up stage is started, the heating roller thermistor/2 (TH2) voltage does not decrease by predetermined steps (temperature rise) within a predetermined time. • When a temperature detected by the heating roller thermister/1 (TH1) is compared with the temperature detected by the heating roller thermister/2 (TH2) to find out that the difference exceeded the predetermined temperature.
Trouble isolation	-
Relevant electrical parts	• Fusing unit • Heating roller thermistor/1 (TH1) • Heating roller thermistor/2 (TH2) • Printer control board (PRCB)

(2) Procedure

Step	Action	Control signal	Location of electrical components
1	Check the fusing unit for correct installation (whether it is secured in position).	-	-
2	Check the open/close operation of the upper right door.	-	-
3	Check the fusing unit and PRCB for proper connection and correct or change as necessary.	-	-
4	Replace the fusing unit	-	-
5	Replace PRCB	-	-

- Link to the layout drawings for related parts by each trouble code (S.49. C3722, C3922)
- Link to the layout drawings for related parts by each trouble code (S.50. C3725, C3825, C3925)
- Link to the layout drawings for related parts by each trouble code (S.52. C3926)

3.9 C4###

3.9.1 C4091

(1) Contents

Trouble type	I/F communication error
Trouble code	C4091

Rank	C
Detection timing	The communication between the MFPB and PRCB can not be completed even when elapsed a given period of time.
Trouble isolation	-
Relevant electrical parts	• MFP board (MFPB) • Printer control board (PRCB)

(2) Procedure

Step	Action	Control signal	Location of electrical components
1	Reboot the machine.	-	-
2	Check the flat cable between MFPB PJ03-PRCB CN41 for proper connection and correct as necessary.	-	-
3	Check the connected portion of the flat cable for any curled pattern or any scratches, and replace it if necessary.	-	-
4	Replace MFPB	-	-
5	Replace PRCB	-	-

- Link to the layout drawings for related parts by each trouble code (S.53. C4091)

3.9.2 C4101

(1) Contents

Trouble type	Polygon motor rotation trouble
Trouble code	C4101
Rank	B
Detection timing	• The polygon motor fails to turn stably even after the lapse of a given period of time after activating and changing rotation speed the polygon motor. • Motor lock signal detects HIGH for a given period time consecutively during the polygon motor is rotating.
Trouble isolation	-
Relevant electrical parts	• PH unit • Front side board (FRB) • Printer control board (PRCB)

(2) Procedure

Step	Action	Control signal	Location of electrical components
1	Check the connector between PH unit-FRB CN17 for proper connection and correct as necessary.	-	-
2	Replace the PH unit	-	-
3	FRB fuse conduction check	-	-
4	Replace FRB	-	-
5	Replace PRCB	-	-

- Link to the layout drawings for related parts by each trouble code (S.54. C4101)

3.9.3 C4501

(1) Contents

Trouble type	Laser malfunction
Trouble code	C4501
Rank	B
Detection timing	• SOS signal is not detected even after the lapse of a given period of time after starting the laser output. • SOS signal is not detected for a given period of time during printing or IDC sensor adjustment.
Trouble isolation	-
Relevant electrical parts	• PH unit • Printer control board (PRCB)

(2) Procedure

Step	Action	Control signal	Location of electrical components
1	Check the connector between PH unit-PRCB CN24 for proper connection and correct as necessary.	-	-
2	Replace the PH unit	-	-
3	Replace PRCB	-	-

- Link to the layout drawings for related parts by each trouble code (S.55. C4501)

3.9.4 C4801

(1) Contents

Trouble type	Main unit board failure
Trouble code	C4801
Rank	C
Detection timing	MFP detects simultaneous replacement of multiple boards.
Trouble isolation	-
Relevant electrical parts	• SSD board (SSDB) • Printer control board (PRCB)

(2) Procedure

Step	Action	Control signal	Location of electrical components
1	Reinstall the old PRCB.	-	-
2	If the above actions do not solve the problem, contact KM.	-	-

- Link to the layout drawings for related parts by each trouble code (S.56. C4801, CC163)

NOTE

- **Do not replace the printer control board and the SSD board at the same time. The backup data is lost and image failure may be caused.**

3.9.5 C4802

(1) Contents

Trouble type	Main unit backup data miscompare
Trouble code	C4802
Rank	C
Detection timing	The replacement of the printer control board is detected.
Trouble isolation	-
Relevant electrical parts	Printer control board (PRCB)

(2) Procedure

Step	Action	Control signal	Location of electrical components
1	1. When the finisher or job separator has been installed, remove it once. 2. Call the Enhanced Security in Service Mode to the screen. 3. Touch [Engine Data Backup]. 4. Touch [Engine Data Reflect Mode], and press the Start key. 5. Select [Yes], and press the Start key again. 6. Check that the result “OK” appears. 7. Turn OFF the main power switch and turn it ON again more than 10 seconds after.	-	-
2	Update the PRCB firmware.	-	-
3	If the above actions do not solve the problem, contact KM.	-	-

- Link to the layout drawings for related parts by each trouble code (S.1. C0002, C4802, C5601, CC15C, CEEE3)

3.10 C5###

3.10.1 C5102, C5103

(1) Contents

Trouble type	Transport motor’s failure to turn
Trouble code	C5102
Rank	B
Detection timing	The motor lock signal remains HIGH for a predetermined continuous period of time while the motor is turning.
Trouble isolation	-
Relevant electrical parts	• Transport motor (M1) • Printer control board (PRCB)

Trouble type	Transport motor’s turning at abnormal timing
Trouble code	C5103
Rank	B
Detection timing	The motor lock signal remains LOW for a predetermined continuous period of time while the motor remains stationary.

Trouble isolation	-
Relevant electrical parts	• Transport motor (M1) • Printer control board (PRCB)

(2) Procedure

Step	Action	Control signal	Location of electrical components
1	Check the connector between M1-PRCB CN31 for proper connection and correct as necessary.	-	-
2	Check M1 for proper drive coupling and correct as necessary.	-	-
3	M1 operation check	PRCB CN31-2 (REM) PRCB CN31-5 (LOCK)	bizhub 364e 21-I to J bizhub 284e 23-I to J bizhub 224e 24-I to J
4	Replace M1	-	-
5	Replace PRCB	-	-

- Link to the wiring diagram (N.1. bizhub 364e/284e/224e)
- Link to the layout drawings for related parts by each trouble code (S.57. C5102, C5103)

3.10.2 C5351

(1) Contents

Trouble type	Power supply cooling fan motor's failure to turn
Trouble code	C5351
Rank	B
Detection timing	The fan lock signal remains HIGH for a predetermined continuous period of time while the fan is turning.
Trouble isolation	-
Relevant electrical parts	• Power supply cooling fan (FM1) • Printer control board (PRCB)

(2) Procedure

Step	Action	Control signal	Location of electrical components
1	Check the connector between FM1-relay CN26-PRCB CN18 for proper connection and correct as necessary.	-	-
2	Check the fan for possible overload and correct as necessary.	-	-
3	FM1 operation check	PRCB CN18-13 (REM) PRCB CN18-15 (LOCK)	6-C
4	Replace FM1	-	-
5	PRCB ICP2 conduction check	-	-
6	Replace PRCB	-	-

- Link to the wiring diagram (N.1. bizhub 364e/284e/224e)
- Link to the layout drawings for related parts by each trouble code (S.58. C5351)

3.10.3 C5354

(1) Contents

Trouble type	Ozone fan's failure to turn
Trouble code	C5354
Rank	B
Detection timing	The fan lock signal remains HIGH for a predetermined continuous period of time while the fan is turning.
Trouble isolation	-
Relevant electrical parts	• Ozone fan (FM13) • Printer control board (PRCB)

(2) Procedure

Step	Action	Control signal	Location of electrical components
1	Check the connector between FM13-relay CN158-PRCB CN23 for proper connection and correct as necessary.	-	-
2	Check the fan for possible overload and correct as necessary.	-	-
3	FM13 operation check	PRCB CN23-7 (REM) PRCB CN23-9 (LOCK)	5-C
4	Replace FM13	-	-

Step	Action	Control signal	Location of electrical components
5	PRCB ICP19 conduction check	-	-
6	Replace PRCB	-	-

- Link to the wiring diagram (N.1. bizhub 364e/284e/224e)
- Link to the layout drawings for related parts by each trouble code (S.59. C5354)

3.10.4 C5355

(1) Contents

Trouble type	Toner bottle cooling fan's failure to turn
Trouble code	C5355
Rank	B
Detection timing	The fan lock signal remains HIGH for a predetermined continuous period of time while the fan is turning.
Trouble isolation	-
Relevant electrical parts	• Toner bottle cooling fan (FM4) • Printer control board (PRCB)

(2) Procedure

Step	Action	Control signal	Location of electrical components
1	Check the connector between FM4-relay CN157-PRCB CN34 for proper connection and correct as necessary.	-	-
2	Check the fan for possible overload and correct as necessary.	-	-
3	FM4 operation check	PRCB CN34-1 (REM) PRCB CN34-3 (LOCK)	26-C
4	Replace FM4	-	-
5	PRCB ICP18 conduction check	-	-
6	Replace PRCB	-	-

- Link to the wiring diagram (N.1. bizhub 364e/284e/224e)
- Link to the layout drawings for related parts by each trouble code (S.60. C5355)

3.10.5 C5370

(1) Contents

Trouble type	Machine rear side cooling fan's failure to turn
Trouble code	C5370
Rank	C
Detection timing	The fan lock signal remains HIGH for a predetermined continuous period of time while the fan is turning.
Trouble isolation	-
Relevant electrical parts	• Machine rear side cooling fan (FM3) • MFP board (MFPB)

(2) Procedure

Step	Action	Control signal	Location of electrical components
1	Check the connector between FM3-MFPB PJ26 for proper connection and correct as necessary.	-	-
2	Check the fan for possible overload and correct as necessary.	-	-
3	FM3 operation check	MFPB PJ26-3 (LOCK)	7-P
4	Replace FM3	-	-
5	Replace MFPB	-	-

- Link to the wiring diagram (N.1. bizhub 364e/284e/224e)
- Link to the layout drawings for related parts by each trouble code (S.61. C5370)

3.10.6 C5372

(1) Contents

Trouble type	MFP control board CPU temperature failure
Trouble code	C5372
Rank	C
Detection timing	Temperature failure of CPU on the MFP board was detected.
Trouble isolation	-

Relevant electrical parts	• CPU cooling fan (FM14) • MFP board (MFPB)

(2) Procedure

Step	Action	Control signal	Location of electrical components
1	Reboot the machine.	-	-
2	Check the connector between FM14-MFPB PJ20 for proper connection and correct as necessary.	-	-
3	Check the fan for possible overload and correct as necessary.	-	-
4	FM14 operation check	MFPB PJ20-1 to 2	1-V
5	Replace MFPB	-	-

- Link to the wiring diagram (N.1. bizhub 364e/284e/224e)
- Link to the layout drawings for related parts by each trouble code (S.62. C5372, C6901, C6902, C6903, CA051, CA052, CA053, CC170 - CC186, CC191 - CC214, CC216, CD211, CD212, CD241, CD242, CD261, CD262, CD271, CD401 - CD413, CE001, CE003 - CE305, CEEE1)

3.10.7 C5501

(1) Contents

Trouble type	AC signal abnormality
Trouble code	C5501
Rank	C
Detection timing	The zero cross signal is not input during fusing phase control.
Trouble isolation	-
Relevant electrical parts	• Fusing unit • DC power supply (DCPU) • Printer control board (PRCB)

(2) Procedure

Step	Action	Control signal	Location of electrical components
1	Check the fusing unit for correct installation (whether it is secured in position).	-	-
2	Check the fusing unit, DCPU and PRCB for proper connection and correct or change as necessary	-	-
3	Replace fusing unit	-	-
4	Replace PRCB	-	-
5	Replace DCPU	-	-

- Link to the layout drawings for related parts by each trouble code (S.63. C5501)

3.10.8 C5601

(1) Contents

Trouble type	Engine control malfunction
Trouble code	C5601
Rank	C
Detection timing	Engine control malfunction is detected with port monitor control.
Trouble isolation	-
Relevant electrical parts	Printer control board (PRCB)

(2) Procedure

Step	Action	Control signal	Location of electrical components
1	Check the connectors on the PRCB for proper connection and correct or change as necessary.	-	-
2	Rewrite the firmware.	-	-
3	Replace PRCB	-	-

- Link to the layout drawings for related parts by each trouble code (S.1. C0002, C4802, C5601, CC15C, CEEE3)

3.10.9 C5603

(1) Contents

Trouble type	Expansion control board communication error
Trouble code	C5603
Rank	C

Detection timing	Communication error is detected in front side board.
Trouble isolation	-
Relevant electrical parts	• Front side board (FRB) • PH unit • Printer control board (PRCB)

(2) Procedure

Step	Action	Control signal	Location of electrical components
1	Reboot the machine.	-	-
2	Check the connector between FRB CN5-PH unit for proper connection and correct as necessary.	-	-
3	Check the connector between FRB CN2-PRCB CN8 for proper connection and correct as necessary.	-	-
4	Replace FRB	-	-
5	Replace PH unit	-	-
6	Replace PRCB	-	-

- Link to the layout drawings for related parts by each trouble code (S.64. C5603)

3.11 C6###

3.11.1 C6001

(1) Contents

Trouble type	DF related configuration error 1
Trouble code	C6001
Rank	C
Detection timing	Inconsistency in the configuration with the installed DF is detected on the main body.
Trouble isolation	-
Relevant electrical parts	• DF control board (DFCB) • Dual scan image processing board (DSIPB) • MFP board (MFPB)

(2) Procedure

Step	Action	Control signal	Location of electrical components
1	Check the type of the installed DF and replace it if it is a wrong one.	-	-
2	Check to see the [Service mode] -> [System2] -> [ADF settings] is correct. It corrects, when a model is different.	-	-
3	Correct the harness connection between DFCB and DSIPB if faulty.	-	-
4	Correct the harness connection between DSIPB and MFPB if faulty.	-	-
5	Replace DFCB	-	-
6	Replace DSIPB	-	-
7	Replace MFPB	-	-

- Link to the layout drawings for related parts by each trouble code (S.65. C6001)

3.11.2 C6002

(1) Contents

Trouble type	DF related configuration error 2
Trouble code	C6002
Rank	C
Detection timing	Inconsistency in the configuration with the installed DF is detected on the DF.
Trouble isolation	-
Relevant electrical parts	• DF control board (DFCB) • Dual scan image processing board (DSIPB)

(2) Procedure

Step	Action	Control signal	Location of electrical components
1	Check the type of the installed DF and replace it if it is a wrong one.	-	-
2	Correct the harness connection between DFCB and DSIPB if faulty.	-	-

Step	Action	Control signal	Location of electrical components
3	Check the connectors of the dual scan image processing board (DSIPB) for proper connection, and correct as necessary. (Direction of the point of contact and connection state of the flat cable in particular)	-	-

- Link to the layout drawings for related parts by each trouble code (S.66. C6002)

3.11.3 C6102, C6103

(1) Contents

Trouble type	Drive system home sensor malfunction
Trouble code	C6102
Rank	B
Detection timing	• The scanner home sensor (PS201) is unable to detect the scanner located at its home position. • The scanner home sensor (PS201) is unable to detect a scanner even when the scanner motor has been driven to move the scanner over the maximum travelling distance. • The scanner home sensor (PS201) detects the scanner when the scanner has moved the maximum travelling distance from the position, at which it blocks the scanner home sensor (PS201).
Trouble isolation	Scanner
Relevant electrical parts	• Scanner home sensor (PS201) • Scanner motor (M201) • Scanner drive board (SCDB) • Printer control board (PRCB)

Trouble type	Slider over running
Trouble code	C6103
Rank	B
Detection timing	The scanner home sensor (PS201) detects the scanner at its home position during a period of time that begins with the time when a prescan command and a scan preparation command are executed and ends when a home return command is executed.
Trouble isolation	Scanner
Relevant electrical parts	• Scanner home sensor (PS201) • Scanner motor (M201) • Scanner drive board (SCDB) • Printer control board (PRCB)

(2) Procedure

Step	Action	Control signal	Location of electrical components
1	Correct or change the scanner drive (pulley, gear, belt) if it is faulty.	-	-
2	Correct the scanner motor set screw if loose.	-	-
3	Adjust [Image Position: Leading Edge] and [Sub Scan Zoom Adj.].	-	-
4	Check the connector between M201-SCDB PJ4 for proper connection and correct as necessary.	-	-
5	Check the connector between PS201-SCDB PJ6 for proper connection and correct as necessary.	-	-
6	Check the connector between SCDB PJ2-PRCB CN43 for proper connection and correct as necessary.	-	-
7	PS201 I/O check, sensor check	SCDB PJ6-3 (ON)	25-P
8	M201 operation check	SCDB PJ4-1 to 4	26-P
9	Replace SCDB	-	-
10	Replace PRCB	-	-

- Link to the wiring diagram (N.1. bizhub 364e/284e/224e)
- Link to the layout drawings for related parts by each trouble code (S.67. C6102, C6103)

3.11.4 C6104, C6105

(1) Contents

Trouble type	Back side cleaning home sensor abnormality (initial)	
Trouble code	C6104	
Rank	B	
Detection timing	<When DF-701 is installed>	• The CIS cleaning sensor (PS7) does not change from H to L even after the lapse of a given period of time after the home position detecting operation is started at the initial operation. • The CIS cleaning sensor (PS7) does not change from L to H even after the lapse of a given period of time after the home position detecting operation is started at the initial operation.

Trouble isolation	Scanner
Relevant electrical parts	• CIS cleaning sensor (PS7) • CIS cleaning motor (M5) • DF control board (DFCB)

Trouble type	Back side cleaning home sensor abnormality (normal)	
Trouble code	C6105	
Rank	B	
Detection timing	<When DF-701 is installed>	At the time of operation other than the initial operation, the CIS cleaning sensor (PS7) error is detected.
Trouble isolation	Scanner	
Relevant electrical parts	• CIS cleaning sensor (PS7) • CIS cleaning motor (M5) • DF control board (DFCB)	

(2) Procedure

Step	Action	Control signal	Location of electrical components
1	Check if the opening and closing guide is firmly closed.	-	-
2	Check the connector between M5-DFCB J9 for proper connection, and correct as necessary.	-	-
3	Check the connector of M5 for proper drive coupling, and correct as necessary.	-	-
4	Check the connector between PS7-DFCB J13 for proper connection, and correct as necessary.	-	-
5	PS7 I/O check, sensor check	DRCB J13-3 (ON)	DF-701 1-G
6	M5 operation check	DRCB J9-1 to 4	DF-701 6-G
7	Replace M5	-	-
8	Replace DFCB	-	-

- Link to the wiring diagram (N.2.1 DF-701)
- Link to the layout drawings for related parts by each trouble code (S.68. C6104, C6105)

3.11.5 C6704

(1) Contents

Trouble type	Image input time out
Trouble code	C6704
Rank	C
Detection timing	Image data is not input from the scanner to the MFP board (MFPB).
Trouble isolation	Scanner
Relevant electrical parts	• MFP board (MFPB) • CCD board (CCDB)

(2) Procedure

Step	Action	Control signal	Location of electrical components
1	Select [Service Mode] -> [State Confirmation] -> [Memory/HDD Adj.] -> [Memory Bus Check] -> [Scanner -> Memory], and conduct the memory bus function.	-	-
2	Check the connectors between scanner section and MFPB for proper connection and correct as necessary.	-	-
3	Replace MFPB	-	-
4	Replace CCDB	-	-

- Link to the layout drawings for related parts by each trouble code (S.69. C6704, C6752, CDF50, CDF70, CDFA0)

3.11.6 C6751

(1) Contents

Trouble type	CCD clamp/gain adjustment failure
Trouble code	C6751
Rank	B
Detection timing	• The adjustment value is 0 or 255 during a CCD clamp adjustment. • The peak value of the output data is 64 or less during a CCD gain adjustment.
Trouble isolation	Scanner

Relevant electrical parts	• LED exposure unit (LU201) • CCD board (CCDB) • MFP board (MFPB)

(2) Procedure

Step	Action	Control signal	Location of electrical components
1	Check the connector between CCDB PJ3-MFPB PJ01 for proper connection and correct as necessary.	-	-
2	Check for possible extraneous light and correct as necessary.	-	-
3	Clean the lens, mirrors, CCD surface, and shading sheet if dirty.	-	-
4	Correct reflective mirror of the scanner if faulty, or change scanner mirror.	-	-
5	Replace CCDB	-	-
6	Replace MFPB	-	-

- Link to the layout drawings for related parts by each trouble code (S.70. C6751)

3.11.7 C6752

(1) Contents

Trouble type	ASIC clock input error (front side)
Trouble code	C6752
Rank	C
Detection timing	When starting the machine, verification on reading and writing the predetermined value for image processing ASIC on CCD board (CCDB) was conducted, and verification failure was detected.
Trouble isolation	-
Relevant electrical parts	• CCD board (CCDB) • MFP board (MFPB)

(2) Procedure

Step	Action	Control signal	Location of electrical components
1	Correct the harness connection of CCDB if faulty.	-	-
2	Replace CCDB	-	-
3	Replace MFPB	-	-

- Link to the layout drawings for related parts by each trouble code (S.69. C6704, C6752, CDF50, CDF70, CDFA0)

3.11.8 C6753

(1) Contents

Trouble type	ASIC clock input error (back side)	
Trouble code	C6753	
Rank	C	
Detection timing	<When DF-701 is installed>	When starting the machine, verification on reading and writing the predetermined value for image processing ASIC on dual scan image processing board (DSIPB) was conducted, and verification failure was detected.
Trouble isolation	-	
Relevant electrical parts	• CIS moduleCIS • Dual scan image processing board (DSIPB) • MFP board (MFPB)	

(2) Procedure

Step	Action	Control signal	Location of electrical components
1	Correct the harness connection between DF and DSIPB if faulty.	-	-
2	Correct the harness connection between DSIPB and MFPB if faulty.	-	-
3	Replace CIS	-	-
4	Replace DSIPB	-	-
5	Replace MFPB	-	-

- Link to the layout drawings for related parts by each trouble code (S.71. C6753)

3.11.9 C6754, C6755

(1) Contents

Trouble type	CIS clamp adjustment failure	
Trouble code	C6754	
Rank	B	
Detection timing	<When DF-701 is installed>	After the gain adjustment is performed at the start-up, the CIS clamp adjustment value is too high or too low.
Trouble isolation	Scanner	
Relevant electrical parts	• CIS module (CIS) • Dual scan image processing board (DSIPB) • CIS power supply (CISPU) • MFP board (MFPB)	

Trouble type	CIS gain adjustment failure	
Trouble code	C6755	
Rank	B	
Detection timing	<When DF-701 is installed>	After the gain adjustment is performed at the start-up, the peak value of the output data is lower than a given value.
Trouble isolation	Scanner	
Relevant electrical parts	• CIS module (CIS) • Dual scan image processing board (DSIPB) • CIS power supply (CISPU) • MFP board (MFPB)	

(2) Procedure

Step	Action	Control signal	Location of electrical components
1	Correct the harness connection between CIS and DSIPB if faulty.	-	-
2	Correct the harness connection between CIS and CISPU if faulty.	-	-
3	Check for possible extraneous light and correct as necessary.	-	-
4	Clean the back side reading glass and the shading sheet if dirty.	-	-
5	Replace CIS	-	-
6	Replace DSIPB	-	-
7	Replace CISPU	-	-
8	Replace MFPB	-	-

- Link to the layout drawings for related parts by each trouble code (S.72. C6754, C6755, C9403, C9404)

3.11.10 C6756

(1) Contents

Trouble type	CCD power-supply voltage malfunction
Trouble code	C6756
Rank	C
Detection timing	Power is not supplied to CCD after the lapse of a given period of time after the main power switch or power key is turned ON or the machine recovers from the sleep mode.
Trouble isolation	-
Relevant electrical parts	• CCD board (CCDB) • Scanner drive board (SCDB) • DC power supply (DCPU)

(2) Procedure

Step	Action	Control signal	Location of electrical components
1	Correct the harness connection between CCDB and SCDB if faulty.	-	-
2	Correct the harness connection between SCDB and DCPU if faulty.	-	-
3	Replace CCDB	-	-
4	Replace SCDB	-	-
5	Replace DCPU	-	-

- Link to the layout drawings for related parts by each trouble code (S.73. C6756)

3.11.11 C6901, C6902, C6903

(1) Contents

Trouble type	DSC board mount failure 1
Trouble code	C6901
Rank	C
Detection timing	When MFP detects that DSC board/1 (front side) is not properly installed.
Trouble isolation	-
Relevant electrical parts	• DSC board/1 (DSCB/1: SC-508) • MFP board (MFPB)

Trouble type	DSC board bus check NG1-1, DSC board bus check NG1-2
Trouble code	C6902, C6903
Rank	C
Detection timing	When DSC bus check (front side) detects an error.
Trouble isolation	-
Relevant electrical parts	• DSC board/1 (DSCB/1: SC-508) • MFP board (MFPB)

(2) Procedure

Step	Action	Control signal	Location of electrical components
1	Correct the harness connection of DSCB/1 if faulty.	-	-
2	Replace DSCB/1	-	-
3	Replace MFPB	-	-

- Link to the layout drawings for related parts by each trouble code (S.62. C5372, C6901, C6902, C6903, CA051, CA052, CA053, CC170 - CC186, CC191 - CC214, CC216, CD211, CD212, CD241, CD242, CD261, CD262, CD271, CD401 - CD413, CE001, CE003 - CE305, CEEE1)

3.11.12 C6911, C6912, C6913

(1) Contents

Trouble type	DSC board mount failure 2	
Trouble code	C6911	
Rank	C	
Detection timing	<When DF-701 is installed>	When MFP detects that DSC board/2 (back side) is not properly installed.
Trouble isolation	-	
Relevant electrical parts	• DSC board/2 (DSCB/2; SC-508) • Dual scan image processing board (DSIPB) • MFP board (MFPB)	

Trouble type	DSC Bus check NG2-1, DSC Bus check NG2-2	
Trouble code	C6912, C6913	
Rank	C	
Detection timing	<When DF-701 is installed>	When DSC bus check (back side) detects an error.
Trouble isolation	-	
Relevant electrical parts	• DSC board/2 (DSCB/2; SC-508) • Dual scan image processing board (DSIPB) • MFP board (MFPB)	

(2) Procedure

Step	Action	Control signal	Location of electrical components
1	Correct the harness connection of DSCB/2 if faulty.	-	-
2	Correct the harness connection of DSIPB if faulty.	-	-
3	Replace DSCB/2	-	-
4	Replace DSIPB	-	-
5	Replace MFPB	-	-

- Link to the layout drawings for related parts by each trouble code (S.74. C6911, C6912, C6913, CDF51, CDF71, CDFA1)

3.11.13 C6F01

(1) Contents

Trouble type	Scanner sequence trouble 1
Trouble code	C6F01
Rank	C

Detection timing	The original transport interval becomes shorter than the predetermined value due to an original transport control error in original reading in DF.
Trouble isolation	Scanner
Relevant electrical parts	• MFP board (MFPB) • DF control board (DFCB)

(2) Procedure

Step	Action	Control signal	Location of electrical components
1	Correct the harness connection between main body and DF if faulty.	-	-
2	Replace DFCB (DF-624/DF-701)	-	-
3	Replace MFPB	-	-

- Link to the layout drawings for related parts by each trouble code (S.75. C6F01)

3.12 C8###

3.12.1 C8101

(1) Contents

Trouble type	Before reading pressure welding alienation mechanism trouble	
Trouble code	C8101	
Rank	B	
Detection timing	<When DF-624 is installed>	• During a pressure motion being performed, the document reading sensor (PS4) output does not change from H to L. • During a retraction motion being performed, the document reading sensor (PS4) output does not change from L to H.
	<When DF-701 is installed>	• During a pressure motion being performed, the document reading sensor (PS6) output does not change from H to L. • During a retraction motion being performed, the document reading sensor (PS6) output does not change from L to H.
Trouble isolation	-	
Relevant electrical parts	<When DF-624 is installed>	• Reading roll release motor (M5) • Document reading sensor (PS4) • DF control board (DFCB)
	<When DF-701 is installed>	• Reading roller release motor (M4) • Document reading sensor (PS6) • DF control board (DFCB)

(2) Procedure

When DF-624 is installed

Step	Action	Control signal	Location of electrical components
1	Check the connector between M5-DFCB J18 for proper connection and correct as necessary.	-	-
2	Check the connector of M5 for proper drive coupling, and correct as necessary.	-	-
3	Check the connector between PS4-DFCB J10 for proper connection and correct as necessary.	-	-
4	PS4 I/O check, sensor check	DFCB J10-3 (ON)	DF-624 2-G
5	M5 operation check	DFCB J18-4 to 5	DF-624 2-G
6	Replace M5	-	-
7	FSCB F8 conduction check	-	-
8	Replace DFCB	-	-

- Link to the wiring diagram (N.2.2 DF-624)
- Link to the layout drawings for related parts by each trouble code (S.76.1 DF-624)

When DF-701 is installed

Step	Action	Control signal	Location of electrical components
1	Check the connector between M4-DFCB J18 for proper connection and correct as necessary.	-	-
2	Check the connector of M4 for proper drive coupling, and correct as necessary.	-	-
3	Check the connector between PS6-DFCB J10 for proper connection and correct as necessary.	-	-
4	PS6 I/O check, sensor check	DFCB J10-3 (ON)	DF-701 2-G
5	M4 operation check	DFCB J18-4 to 5	DF-701 1-G
6	Replace M4	-	-
7	FSCB F8 conduction check	-	-

Step	Action	Control signal	Location of electrical components
8	Replace DFCB	-	-

- Link to the wiring diagram (N.2.1 DF-701)
- Link to the layout drawings for related parts by each trouble code (S.76.2 DF-701)

3.12.2 C8107

(1) Contents

Trouble type	Glass cleaning mechanism trouble	
Trouble code	C8107	
Rank	B	
Detection timing	<When DF-624 is installed>	The document reading glass cleaning sensor (PS12) is not turned ON after the set period of time has elapsed after the glass cleaning motor (M4) is turned ON.
	<When DF-701 is installed>	The document reading glass cleaning sensor (PS13) is not turned ON after the set period of time has elapsed after the document reading glass cleaning motor (M6) is turned ON.
Trouble isolation	-	
Relevant electrical parts	<When DF-624 is installed>	• Glass cleaning motor (M4) • Document reading glass cleaning sensor (PS12) • DF control board (DFCB)
	<When DF-701 is installed>	• Document reading glass cleaning motor (M6) • Document reading glass cleaning sensor (PS13) • DF control board (DFCB)

(2) Procedure

When DF-624 is installed

Step	Action	Control signal	Location of electrical components
1	Check the connector between M4-DFCB J8 for proper connection and correct as necessary.	-	-
2	Check the connector of M4 for proper drive coupling, and correct as necessary.	-	-
3	Check the connector between PS12-DFCB J15 for proper connection and correct as necessary.	-	-
4	PS12 I/O check, sensor check	DFCB J15-5 (ON)	DF-624 3-G
5	M4 operation check	DFCB J8-1 to 4	DF-624 1 to 2-B
6	Replace M4	-	-
7	Replace DFCB	-	-

- Link to the wiring diagram (N.2.2 DF-624)
- Link to the layout drawings for related parts by each trouble code (S.77.1 DF-624)

When DF-701 is installed

Step	Action	Control signal	Location of electrical components
1	Check the connector between M6-DFCB J8 for proper connection and correct as necessary.	-	-
2	Check the connector of M6 for proper drive coupling, and correct as necessary.	-	-
3	Check the connector between PS13-DFCB J15 for proper connection and correct as necessary.	-	-
4	PS13 I/O check, sensor check	DFCB J15-5 (ON)	DF-701 3-G
5	M6 operation check	DFCB J8-1 to 4	DF-701 1-B
6	Replace M6	-	-
7	Replace DFCB	-	-

- Link to the wiring diagram (N.2.1 DF-701)
- Link to the layout drawings for related parts by each trouble code (S.77.2 DF-701)

3.12.3 C8302

(1) Contents

Trouble type	Cooling fan trouble	
Trouble code	C8302	
Rank	B	
Detection timing	<When DF-624 is installed> <When DF-701 is installed>	• The lock signal continues to detect H during a given time while the DF cooling fan motor (FM1) is spinning. • The lock signal continues to detect L during a given time while the cooling fan (FM1) is during halts.
Trouble isolation	-	

Relevant electrical parts	• DF cooling fan motor (FM1) • DF control board (DFCB)

(2) Procedure

When DF-624 is installed

Step	Action	Control signal	Location of electrical components
1	Check the connector between FM1-DFCB J16 for proper connection and correct as necessary.	-	-
2	Check the fan for possible overload and correct as necessary.	-	-
3	FM1 operation check	DFCB J16-3 (ON)	DF-624 3-B
4	Replace FM1	-	-
5	DFCB F6 conduction check	-	-
6	Replace DFCB	-	-

- Link to the wiring diagram (N.2.2 DF-624)
- Link to the layout drawings for related parts by each trouble code (S.78.1 DF-624)

When DF-701 is installed

Step	Action	Control signal	Location of electrical components
1	Check the connector between FM1-DFCB J16 for proper connection and correct as necessary.	-	-
2	Check the fan for possible overload and correct as necessary.	-	-
3	FM1 operation check	DFCB J16-3 (ON)	DF-701 7-G
4	Replace FM1	-	-
5	DFCB F6 conduction check	-	-
6	Replace DFCB	-	-

- Link to the wiring diagram (N.2.1 DF-701)
- Link to the layout drawings for related parts by each trouble code (S.78.2 DF-701)

3.12.4 C8401

(1) Contents

Trouble type	Data flash failure
Trouble code	C8401
Rank	C
Detection timing	Data flash does not access normally
Trouble isolation	-
Relevant electrical parts	DF control board (DFCB)

(2) Procedure

Step	Action	Control signal	Location of electrical components
1	Turn OFF the main power switch, disconnect and then connect the power cord. Wait for 10 sec. or more after connect the power cord, and turn ON the main power switch.	-	-
2	Check the DFCB connector for proper connection and correct as necessary.	-	-
3	Rewrite the firmware.	-	-
4	Replace DFCB (DF-701) 12Replace DFCB (DF-624)	-	-

- Link to the layout drawings for related parts by each trouble code (S.79. C8401, CC156, CC165)

3.13 C9###

3.13.1 C9401, C9402

(1) Contents

Trouble type	Exposure LED lighting failure
Trouble code	C9401
Rank	A
Detection timing	The output from the CCD sensor is a predetermined value or less during CCD sensor gain adjustment.
Trouble isolation	Scanner
Relevant electrical parts	• LED exposure unit (LU201) • Flat cable (LED exposure unit) • CCD board (CCDB)

	• Scanner drive board (SCDB) • Printer control board (PRCB) • MFP board (MFPB)

Trouble type	Exposure LED lighting abnormally
Trouble code	C9402
Rank	A
Detection timing	The average output value of the CCD sensor with the scanner at its standby position is a predetermined value or more at the end of a scan job.
Trouble isolation	Scanner
Relevant electrical parts	• LED exposure unit (LU201) • Flat cable (LED exposure unit) • CCD board (CCDB) • Scanner drive board (SCDB) • Printer control board (PRCB) • MFP board (MFPB)

(2) Procedure

Step	Action	Control signal	Location of electrical components
1	Check the connection between SCDB-LU201, and correct if necessary.	-	-
2	Check the connector between SCDB PJ2-PRCB CN43 for proper connection and correct as necessary.	-	-
3	Check the connector between CCDB PJ3-MFPB PJ01 for proper connection and correct as necessary.	-	-
4	Replace the LED exposure unit	-	-
5	Replace CCDB	-	-
6	SCDB F1 conduction check	-	-
7	Replace SCDB	-	-
8	Replace PRCB	-	-
9	Replace MFPB	-	-

- Link to the layout drawings for related parts by each trouble code (S.80. C9401, C9402)

3.13.2 C9403, C9404

(1) Contents

Trouble type	CIS LED lighting failure	
Trouble code	C9403	
Rank	A	
Detection timing	<When DF-701 is installed>	At the CIS gain adjustment, the machine detected that the output of the CIS LED is lower than the specified value.
Trouble isolation	Scanner	
Relevant electrical parts	• CIS module (CIS) • CIS power supply (CISPU) • Dual scan image processing board (DSIPB) • MFP board (MFPB)	

Trouble type	CIS LED lighting abnormally	
Trouble code	C9404	
Rank	A	
Detection timing	<When DF-701 is installed>	After a scan job is completed, the machine detected that the average output of the CIS LED is greater than the specified value.
Trouble isolation	Scanner	
Relevant electrical parts	• CIS module (CIS) • CIS power supply (CISPU) • Dual scan image processing board (DSIPB) • MFP board (MFPB)	

(2) Procedure

Step	Action	Control signal	Location of electrical components
1	Correct the harness connection between CIS and DSIPB if faulty.	-	-
2	Correct the harness connection between CIS and CISPU if faulty.	-	-
3	Replace CIS	-	-
4	CISPU F1, F2 conduction check	-	-

Step	Action	Control signal	Location of electrical components
5	Replace CISPU	-	-
6	Replace DSIPB	-	-
7	Replace MFPB	-	-

- Link to the layout drawings for related parts by each trouble code (S.72. C6754, C6755, C9403, C9404)

3.14 CA###

3.14.1 CA051, CA052, CA053

(1) Contents

Trouble type	Standard controller configuration failure
Trouble code	CA051
Rank	C
Detection timing	The controller of the MFP board (MFPB) is faulty.
Trouble isolation	-
Relevant electrical parts	MFP board (MFPB)

Trouble type	Controller hardware error
Trouble code	CA052
Rank	C
Detection timing	A controller hardware error is detected in the network interface.
Trouble isolation	-
Relevant electrical parts	MFP board (MFPB)

Trouble type	Controller start failure
Trouble code	CA053
Rank	C
Detection timing	A controller start failure is detected in the controller interface.
Trouble isolation	-
Relevant electrical parts	MFP board (MFPB)

(2) Procedure

Step	Action	Control signal	Location of electrical components
1	Check to see if [Service Mode] -> [System 2] -> [Image Controller Setting] has been set to “Controller 0.” If changing the setting, turn OFF the main power switch and turn it ON again after 10 seconds or more.	-	-
2	Check the connectors of the MFPB for proper connection and correct as necessary.	-	-
3	Replace MFPB	-	-

- Link to the layout drawings for related parts by each trouble code (S.62. C5372, C6901, C6902, C6903, CA051, CA052, CA053, CC170 - CC186, CC191 - CC214, CC216, CD211, CD212, CD241, CD242, CD261, CD262, CD271, CD401 - CD413, CE001, CE003 - CE305, CEEE1)

3.15 CC###

3.15.1 CC001

(1) Contents

Trouble type	Vendor connection failure
Trouble code	CC001
Rank	C
Detection timing	It is detected that communications with the vendor are interrupted for a given period of time or more with “Installed” selected for the setting of vendor installation.
Trouble isolation	-
Relevant electrical parts	• Printer control board (PRCB) • MFP board (MFPB) • Coin vendor (Japan) • Coin vendor kit (North America, Europe)

(2) Procedure

Step	Action	Control signal	Location of electrical components
1	Check the connector between vendor-PRCB CN42 for proper connection and correct as necessary.	-	-
2	Check the connector between PRCB CN41-MFPB PJ03 for proper connection and correct as necessary.	-	-

Step	Action	Control signal	Location of electrical components
3	Replace MFPB	-	-
4	Replace PRCB	-	-
5	Replace vendor	-	-

- Link to the layout drawings for related parts by each trouble code (S.81. CC001)

3.15.2 CC140

(1) Contents

Trouble type	Trouble related to security
Trouble code	CC140
Rank	C
Detection timing	Contact the responsible people of KM before taking some countermeasures.
Trouble isolation	-

3.15.3 CC151, CC152

(1) Contents

Trouble type	ROM contents error upon startup (MSC)
Trouble code	CC151
Rank	C
Detection timing	A fault is detected in a sequence of ROM contents check of the MFPB during starting.
Trouble isolation	-
Relevant electrical parts	-

Trouble type	ROM contents error upon startup (scanner)
Trouble code	CC152
Rank	C
Detection timing	A fault is detected in a sequence of ROM contents check of the MFPB during starting.
Trouble isolation	-
Relevant electrical parts	-

(2) Procedure

Step	Action	Control signal	Location of electrical components
1	Check the ROM version.	-	-
2	Rewrite the firmware.	-	-
3	Replace the appropriate board. MSC: MFP board (MFPB) IR: MFP board (MFPB)	-	-

3.15.4 CC155

(1) Contents

Trouble type	Finisher ROM error	
Trouble code	CC155	
Rank	C	
Detection timing	Data of flash ROM of the finishing options is determined to be faulty when the main power swicth is turned ON.	
Trouble isolation	-	
Relevant electrical parts	<When FS-533 or FS-534 is installed>	FS control board (FSCB)
	<When JS-506 is installed>	JS control board (JSCB)

(2) Procedure

When FS-533 or FS-534 is installed

Step	Action	Control signal	Location of electrical components
1	Turn OFF the main power switch, disconnect and then connect the power cord. Wait for 10 sec. or more after connect the power cord, and turn ON the main power switch.	-	-
2	Rewrite the firmware.	-	-
3	Replace FSCB (FS-533/FS-534)	-	-

- Link to the layout drawings for related parts by each trouble code (S.13. C1004, CC155)

When JS-506 is installed

Step	Action	Control signal	Location of electrical components
1	Turn OFF the main power switch, disconnect and then connect the power cord. Wait for 10 sec. or more after connect the power cord, and turn ON the main power switch.	-	-
2	Rewrite the firmware.	-	-
3	Replace JSCB	-	-

- Link to the layout drawings for related parts by each trouble code (S.13. C1004, CC155)

3.15.5 CC156

(1) Contents

Trouble type	DF ROM error	
Trouble code	CC156	
Rank	C	
Detection timing	<When DF-624 or DF-701 is installed>	Upgrade of the firmware has not been successful.
Trouble isolation	-	
Relevant electrical parts	DF control board (DFCB)	

(2) Procedure

Step	Action	Control signal	Location of electrical components
1	Turn OFF the main power switch, disconnect and then connect the power cord. Wait for 10 sec. or more after connect the power cord, and turn ON the main power switch.	-	-
2	Rewrite the firmware.	-	-
3	Replace DFCB (DF-624/DF-701)	-	-

- Link to the layout drawings for related parts by each trouble code (S.79. C8401, CC156, CC165)

3.15.6 CC159, CC15A

(1) Contents

Trouble type	ROM contents error upon startup (DSC1), ROM contents error upon startup (DSC2)
Trouble code	CC159, CC15A
Rank	C
Detection timing	A fault is detected in a sequence of ROM contents check of the DSC board during starting.
Trouble isolation	-
Relevant electrical parts	• DSC board/1 (DSCB/1; SC-508) • DSC board/2 (DSCB/2; SC-508: only when DF-701 is installed)

(2) Procedure

Step	Action	Control signal	Location of electrical components
1	Check DSCB/1 or DSCB/2 connector for proper connection and correct as necessary.	-	-
2	Turn OFF the main power switch, disconnect and then connect the power cord. Wait for 10 sec. or more after connect the power cord, and turn ON the main power switch.	-	-
3	Rewrite the firmware.	-	-
4	Replace DSCB/1 or DSCB/2	-	-

3.15.7 CC15B

(1) Contents

Trouble type	Flash ROM error (saddle)	
Trouble code	CC15B	
Rank	C	
Detection timing	<When FS-534+SD-511 is installed>	Data of flash ROM of the saddle is determined to be faulty when the main power switch is turned ON.
Trouble isolation	-	
Relevant electrical parts	SD drive board (SDDB)	

(2) Procedure

Step	Action	Control signal	Location of electrical components
1	Turn OFF the main power switch, disconnect and then connect the power cord. Wait for 10 sec. or more after connect the power cord, and turn ON the main power switch.	-	-
2	Rewrite the firmware.	-	-
3	Replace SDDB	-	-

- Link to the layout drawings for related parts by each trouble code (S.82. CC15B)

3.15.8 CC15C

(1) Contents

Trouble type	Engine Flash ROM writing error
Trouble code	CC15C
Rank	C
Detection timing	Data of flash ROM of the engine is determined to be faulty.
Trouble isolation	-
Relevant electrical parts	Printer control board (PRCB)

(2) Procedure

Step	Action	Control signal	Location of electrical components
1	Turn OFF the main power switch, disconnect and then connect the power cord. Wait for 10 sec. or more after connect the power cord, and turn ON the main power switch.	-	-
2	Rewrite the firmware.	-	-
3	Replace PRCB	-	-

- Link to the layout drawings for related parts by each trouble code (S.1. C0002, C4802, C5601, CC15C, CEEE3)

3.15.9 CC163

(1) Contents

Trouble type	ROM contents error (PRT)
Trouble code	CC163
Rank	C
Detection timing	The wrong model of firmware is detected in the engine during the initial connection to the engine is being checked.
Trouble isolation	-
Relevant electrical parts	• SSD board (SSDB) • Printer control board (PRCB)

(2) Procedure

Step	Action	Control signal	Location of electrical components
1	Rewrite the firmware.	-	-
2	Replace PRCB 1. Turn OFF the main power switch and replace the current PRCB with a new one. 2. Update the PRCB firmware. 3. After completing the firmware update, turn OFF and ON the main power switch and check to see that warm-up is started. 4. When the trouble cannot be solved, reinstall the removed PRCB to the original board. **NOTE** • **When taking the above steps, check whether PRCB is defective or not without replacing the SSDB.**	-	-
3	If the above actions do not solve the problem, contact KM.	-	-

- Link to the layout drawings for related parts by each trouble code (S.56. C4801, CC163)

3.15.10 CC164

(1) Contents

Trouble type	ROM contents error (MSC)

Trouble code	CC164
Rank	C
Detection timing	• The wrong model of firmware is detected in the MFP board when the main power switch is turned ON. • The machine type information (Machine, Type) registered to the machine differs from the actual machine type.
Trouble isolation	-
Relevant electrical parts	• Printer control board (PRCB) • MFP board (MFPB)

(2) Procedure

Step	Action	Control signal	Location of electrical components
1	Check the ROM version.	-	-
2	Check the machine type information registered and re-enter as necessary. For details the machine information, see "J.2.4 Entering the machine type information".	-	-
3	Rewrite the firmware.	-	-
4	Replace the corresponding board.	-	-
5	If the above actions do not solve the problem, contact KM.	-	-

• Link to the layout drawings for related parts by each trouble code (S.83. CC164)

3.15.11 CC165

(1) Contents

Trouble type	ROM contents error (DF)
Trouble code	CC165
Rank	C
Detection timing	When the power is turned ON, DF control board or firmware error is detected.
Trouble isolation	-
Relevant electrical parts	DF control board (DFCB)

(2) Procedure

Step	Action	Control signal	Location of electrical components
1	Turn OFF the main power switch, disconnect and then connect the power cord. Wait for 10 sec. or more after connect the power cord, and turn ON the main power switch.	-	-
2	Rewrite the firmware.	-	-
3	Replace DFCB (DF-624/DF-701)	-	-

• Link to the layout drawings for related parts by each trouble code (S.79. C8401, CC156, CC165)

3.15.12 CC170, CC171, CC172, CC173, CC174, CC180, CC181, CC182, CC183, CC184, CC185, CC186

(1) Contents

Trouble type	Dynamic link error during starting (AP0)
	Dynamic link error during starting (AP1)
	Dynamic link error during starting (AP2)
	Dynamic link error during starting (AP3)
	Dynamic link error during starting (AP4)
	Dynamic link error during starting (LDR)
	Dynamic link error during starting (IBR)
	Dynamic link error during starting (IID)
	Dynamic link error during starting (IPF)
	Dynamic link error during starting (IMY)
	Dynamic link error during starting (SPF)
	Dynamic link error during starting (OAP)
Trouble code	CC170
	CC171
	CC172
	CC173
	CC174
	CC180

	CC181
	CC182
	CC183
	CC184
	CC185
	CC186
Rank	C
Detection timing	A dynamic link error occurs in the program on the MFP board due to an insufficient memory space available, a ROM fault, or other reason when the main power switch is turned ON.
Trouble isolation	-
Relevant electrical parts	MFP board (MFPB)

(2) Procedure

Step	Action	Control signal	Location of electrical components
1	If the malfunction code “CC172” has occurred, access [Service Mode] -> [System 2] -> [Image Controller Setting] and check to see if “Controller 1,” “Controller 2,” “Controller 3,” or “Others” is set for [Image Controller Setting]. If any of these is set, select “Controller 0.”	-	-
2	If the malfunction code "C-C180" has occurred, check to install the appropriate loadable device driver for an authentication unit which is installed to the MFP. When the appropriate loadable device driver is not installed, reinstall the appropriate loadable device driver.	-	-
3	Replace MFPB	-	-
4	If the above actions do not solve the problem, contact KM.	-	-

- Link to the layout drawings for related parts by each trouble code (S.62. C5372, C6901, C6902, C6903, CA051, CA052, CA053, CC170 - CC186, CC191 - CC214, CC216, CD211, CD212, CD241, CD242, CD261, CD262, CD271, CD401 - CD413, CE001, CE003 - CE305, CEEE1)

3.15.13 CC190

(1) Contents

Trouble type	Outline font load error
Trouble code	CC190
Rank	C
Detection timing	An error occurred while loading the outline font.
Trouble isolation	-
Relevant electrical parts	• MFP board (MFPB) • Hard disk

(2) Procedure

Step	Action	Control signal	Location of electrical components
1	Check the connector between hard disk-MFPB PJ11 for proper connection and correct as necessary.	-	-
2	Format hard disk.	-	-
3	Replace the hard disk.	-	-
4	Replace MFPB	-	-

- Link to the layout drawings for related parts by each trouble code (S.84. CC190, CD002, CD004, CD00F, CD020)

3.15.14 CC191

(1) Contents

Trouble type	Setting parameter load error (LDR)
Trouble code	CC191
Rank	C
Detection timing	Upon startup, the processing of the loadable device driver setting data file failed. • RAM disk file creation failed. • Reading from the flash ROM failed. • An error occurred in API of the authentication module.
Trouble isolation	-

Relevant electrical parts	MFP board (MFPB)

(2) Procedure

Step	Action	Control signal	Location of electrical components
1	Turn OFF the main power switch, wait for 10 sec. or more, and turn ON the main power switch.	-	-
2	Reinstall the loadable device driver.	-	-
3	Rewrite the firmware.	-	-
4	Replace MFPB	-	-

- Link to the layout drawings for related parts by each trouble code (S.62. C5372, C6901, C6902, C6903, CA051, CA052, CA053, CC170 - CC186, CC191 - CC214, CC216, CD211, CD212, CD241, CD242, CD261, CD262, CD271, CD401 - CD413, CE001, CE003 - CE305, CEEE1)

3.15.15 CC211

(1) Contents

Trouble type	Authentication device general error
Trouble code	CC211
Rank	C
Detection timing	When using the authentication device, authentication data is not to meet the specifications.
Trouble isolation	-
Relevant electrical parts	• MFP board (MFPB) • Authentication device

(2) Procedure

Step	Action	Control signal	Location of electrical components
1	Check the USB cable for proper connection and correct as necessary.	-	-
2	Turn OFF the main power switch, wait for 10 sec. or more, and turn ON the main power switch.	-	-

- Link to the layout drawings for related parts by each trouble code (S.62. C5372, C6901, C6902, C6903, CA051, CA052, CA053, CC170 - CC186, CC191 - CC214, CC216, CD211, CD212, CD241, CD242, CD261, CD262, CD271, CD401 - CD413, CE001, CE003 - CE305, CEEE1)

3.15.16 CC212

(1) Contents

Trouble type	User validation error
Trouble code	CC212
Rank	C
Detection timing	• An error occurred while validating the user authentication information. • The loadable device driver is not successfully installed.
Trouble isolation	-
Relevant electrical parts	• MFP board (MFPB) • Authentication device

(2) Procedure

Step	Action	Control signal	Location of electrical components
1	When this trouble code is generated after installing the loadable device driver, check to see if there is any file other than loadable device driver in USB memory used. If there is any file, reinstall the loadable device driver.	-	-
2	Check the USB cable for proper connection and correct as necessary.	-	-
3	Turn OFF the main power switch, wait for 10 sec. or more, and turn ON the main power switch.	-	-
4	Re-register the user authentication information.	-	-
5	Replace authentication device.	-	-

- Link to the layout drawings for related parts by each trouble code (S.62. C5372, C6901, C6902, C6903, CA051, CA052, CA053, CC170 - CC186, CC191 - CC214, CC216, CD211, CD212, CD241, CD242, CD261, CD262, CD271, CD401 - CD413, CE001, CE003 - CE305, CEEE1)

3.15.17 CC213

(1) Contents

Trouble type	• User registration error • Card information setting error
Trouble code	CC213
Rank	C
Detection timing	• IC card advanced settings data is not correct when starting-up the authentication device. • Authentication information data is not correct when starting-up the authentication device. • IC card advanced settings data is not correct when setting the IC card advanced settings. • Authentication information data is not correct when setting the IC card advanced settings. • IC card advanced settings data is not correct when registering the authentication information. • Authentication information data is not correct when registering the authentication information. • IC card advanced settings data is not correct when editing the authentication information. • Authentication information data is not correct when editing the authentication information.
Trouble isolation	-
Relevant electrical parts	• MFP board (MFPB) • Authentication device

(2) Procedure

Step	Action	Control signal	Location of electrical components
1	Check the USB cable for proper connection and correct as necessary.	-	-
2	Turn OFF the main power switch, wait for 10 sec. or more, and turn ON the main power switch.	-	-
3	Reset the authentication settings. (card type, IC card advanced settings, and etc.)	-	-
4	Re-register the user authentication information.	-	-

- Link to the layout drawings for related parts by each trouble code (S.62. C5372, C6901, C6902, C6903, CA051, CA052, CA053, CC170 - CC186, CC191 - CC214, CC216, CD211, CD212, CD241, CD242, CD261, CD262, CD271, CD401 - CD413, CE001, CE003 - CE305, CEEE1)

3.15.18 CC214

(1) Contents

Trouble type	User information deletion error
Trouble code	CC214
Rank	C
Detection timing	The deletion of the user information is uncompleted.
Trouble isolation	-
Relevant electrical parts	• MFP board (MFPB) • Authentication device

(2) Procedure

Step	Action	Control signal	Location of electrical components
1	Check the USB cable for proper connection and correct as necessary.	-	-
2	Turn OFF the main power switch, wait for 10 sec. or more, and turn ON the main power switch.	-	-

- Link to the layout drawings for related parts by each trouble code (S.62. C5372, C6901, C6902, C6903, CA051, CA052, CA053, CC170 - CC186, CC191 - CC214, CC216, CD211, CD212, CD241, CD242, CD261, CD262, CD271, CD401 - CD413, CE001, CE003 - CE305, CEEE1)

3.15.19 CC216

(1) Contents

Trouble type	Acquisition failure of the number of trials/Initialize error of number of authentication
Trouble code	CC216
Rank	C
Detection timing	An error occurred during user authentication using optional authentication unit AU-102.
Trouble isolation	-
Relevant electrical parts	• MFP board (MFPB) • Authentication device

(2) Procedure

Step	Action	Control signal	Location of electrical components
1	Check the USB cable for proper connection and correct as necessary.	-	-
2	Turn OFF the main power switch, wait for 10 sec. or more, and turn ON the main power switch.	-	-
3	Reset the number of authentication trials.	-	-

- Link to the layout drawings for related parts by each trouble code (S.62. C5372, C6901, C6902, C6903, CA051, CA052, CA053, CC170 - CC186, CC191 - CC214, CC216, CD211, CD212, CD241, CD242, CD261, CD262, CD271, CD401 - CD413, CE001, CE003 - CE305, CEEE1)

3.16 CD###

3.16.1 CD002

(1) Contents

Trouble type	JOB RAM save error
Trouble code	CD002
Rank	C
Detection timing	The error in save of job data to the memory/ hard disk and its read error are detected.
Trouble isolation	-
Relevant electrical parts	• MFP board (MFPB) • Hard disk

(2) Procedure

Step	Action	Control signal	Location of electrical components
1	Check the connector between hard disk-MFPB PJ11 for proper connection and correct as necessary.	-	-
2	Format hard disk.	-	-
3	Replace the hard disk.	-	-
4	Replace MFPB	-	-

- Link to the layout drawings for related parts by each trouble code (S.84. CC190, CD002, CD004, CD00F, CD020)

3.16.2 CD004, CD00F, CD020

(1) Contents

Trouble type	Hard disk access error (connection failure)
Trouble code	CD004
Rank	C
Detection timing	Unable to communicate between the hard disk and MFP board (MFPB).
Trouble isolation	-
Relevant electrical parts	• MFP board (MFPB) • Hard disk

Trouble type	Hard disk data transfer error
Trouble code	CD00F
Rank	C
Detection timing	Data transfer from the hard disk is faulty.
Trouble isolation	-
Relevant electrical parts	• MFP board (MFPB) • Hard disk

Trouble type	Hard disk verify error
Trouble code	CD020
Rank	C
Detection timing	The data abnormality is detected by the hard disk verify check.
Trouble isolation	-
Relevant electrical parts	• MFP board (MFPB) • Hard disk

(2) Procedure

Step	Action	Control signal	Location of electrical components
1	Check the connector between hard disk-MFPB PJ11 for proper connection and correct as necessary.	-	-
2	Reinstall the hard disk.	-	-

Step	Action	Control signal	Location of electrical components
3	Replace the hard disk.	-	-
4	Replace MFPB.	-	-

- Link to the layout drawings for related parts by each trouble code (S.84. CC190, CD002, CD004, CD00F, CD020)

3.16.3 CD010

(1) Contents

Trouble type	Hard disk unformat
Trouble code	CD010
Rank	C
Detection timing	Unformatted hard disk is connected.
Trouble isolation	-
Relevant electrical parts	• MFP board (MFPB) • Hard disk

(2) Procedure

Step	Action	Control signal	Location of electrical components
1	Select [Service Mode] -> [State Confirmation] -> [Memory/HDD Adj.] -> [HDD Format], and conduct the HDD format function.	-	-
2	Replace the hard disk.	-	-
3	Replace MFPB	-	-

- Link to the layout drawings for related parts by each trouble code (S.85. CD010, CD272, CE002)

3.16.4 CD011

(1) Contents

Trouble type	Hard disk out of specifications mounted
Trouble code	CD011
Rank	C
Detection timing	A hard disk that falls outside the specifications is connected.
Trouble isolation	-
Relevant electrical parts	Hard disk

(2) Procedure

Step	Action	Control signal	Location of electrical components
1	Check the hard disk specifications.	-	-
2	Replace the hard disk.	-	-

- Link to the layout drawings for related parts by each trouble code (S.86. CD011, CD012, CD030, CD041 - CD04B)

3.16.5 CD012

(1) Contents

Trouble type	Mount error due to hard disk being unformatted
Trouble code	CD012
Rank	C
Detection timing	• The hard disk is not logically formatted after the whole data in the hard disk has been deleted by overwriting. • The hard disk that has replaced an old one is not logically formatted.
Trouble isolation	-
Relevant electrical parts	Hard disk

(2) Procedure

Step	Action	Control signal	Location of electrical components
1	Logically format the hard disk and then upgrade the firmware.	-	-
2	Replace the hard disk.	-	-

- Link to the layout drawings for related parts by each trouble code (S.86. CD011, CD012, CD030, CD041 - CD04B)

3.16.6 CD030

(1) Contents

Trouble type	Hard disk management information reading error
Trouble code	CD030

Rank	C
Detection timing	The machine fails to read administrative information data saved in the hard disk.
Trouble isolation	-
Relevant electrical parts	Hard disk

(2) Procedure

Step	Action	Control signal	Location of electrical components
1	Check the connector between the hard disk-MFPB PJ11 for proper connection and correct as necessary.	-	-
2	Logically format the hard disk.	-	-
3	Physically format the hard disk.	-	-
4	Replace the hard disk.	-	-

- Link to the layout drawings for related parts by each trouble code (S.86. CD011, CD012, CD030, CD041 - CD04B)

3.16.7 CD041, CD042, CD043, CD044, CD045, CD046

(1) Contents

Trouble type	HDD command execution error
Trouble code	CD041, CD042, CD043, CD044, CD045, CD046
Rank	C
Detection timing	The error occurred inside the hard disk.
Trouble isolation	-
Relevant electrical parts	Hard disk

(2) Procedure

Step	Action	Control signal	Location of electrical components
1	Check the hard disk specifications.	-	-
2	Format hard disk.	-	-
3	Replace the hard disk.	-	-

- Link to the layout drawings for related parts by each trouble code (S.86. CD011, CD012, CD030, CD041 - CD04B)

3.16.8 CD047, CD048, CD049, CD04A, CD04B

(1) Contents

Trouble type	HDD SCSI library error
Trouble code	CD047, CD048, CD049, CD04A, CD04B
Rank	C
Detection timing	The error occurred inside the hard disk.
Trouble isolation	-
Relevant electrical parts	Hard disk

(2) Procedure

Step	Action	Control signal	Location of electrical components
1	Check the hard disk specifications.	-	-
2	Format hard disk.	-	-
3	Replace the hard disk.	-	-

- Link to the layout drawings for related parts by each trouble code (S.86. CD011, CD012, CD030, CD041 - CD04B)

3.16.9 CD110

(1) Contents

Trouble type	Wireless LAN destination initialization error
Trouble code	CD110
Rank	C
Detection timing	When an initialization error occurred on the settings of the wireless LAN in the upgrade kit (UK-208).
Trouble isolation	-
Relevant electrical parts	-

(2) Procedure

Step	Action	Control signal	Location of electrical components
1	Check the UK-208 connector for proper connection and correct as necessary.	-	-

Step	Action	Control signal	Location of electrical components
2	Check the UK-209 and DSIPB for proper connection and correct as necessary.	-	-
3	Update the PRCB firmware.	-	-
4	Reinstall the UK-208.	-	-
5	Reinstall the UK-209 or DSIPB.	-	-

3.16.10 CD201, CD202, CD203

(1) Contents

Trouble type	File memory mounting error
Trouble code	CD201
Rank	C
Detection timing	• The file memory is not mounted. • The file has any abnormality.
Trouble isolation	-
Relevant electrical parts	• MFP board (MFPB) • Memory board/1 (MEMB/1) • Memory board/2 (MEMB/2; UK-204)

Trouble type	Memory capacity discrepancy
Trouble code	CD202
Rank	C
Detection timing	• File memory capacity on the MFP board (MFPB) is not enough. • File memory capacity necessary for duplex printing is not enough.
Trouble isolation	-
Relevant electrical parts	• MFP board (MFPB) • Memory board/1 (MEMB/1) • Memory board/2 (MEMB/2; UK-204)

Trouble type	Memory capacity discrepancy 2
Trouble code	CD203
Rank	C
Detection timing	File memory capacity on the MFP board (MFPB) is not enough.
Trouble isolation	-
Relevant electrical parts	• MFP board (MFPB) • Memory board/1 (MEMB/1) • Memory board/2 (MEMB/2; UK-204)

(2) Procedure

Step	Action	Control signal	Location of electrical components
1	Check to see if MEMB/1 or MEMB/2 on MFPB is installed correctly.	-	-
2	Replace MEMB/1 or MEMB/2 on MFPB.	-	-
3	Replace MFPB.	-	-

- Link to the layout drawings for related parts by each trouble code (S.87. CD201, CD202, CD203)

3.16.11 CD211, CD212

(1) Contents

Trouble type	PCI-SDRAM DMA operation failure
Trouble code	CD211
Rank	C
Detection timing	Hardware related to the transfer of memory image of the MFP board (MFPB) fails to respond.
Trouble isolation	-
Relevant electrical parts	MFP board (MFPB)

Trouble type	Compression/extraction timeout detection
Trouble code	CD212
Rank	C
Detection timing	Hardware related to the BTC compression function of the MFP board (MFPB) fails to respond.
Trouble isolation	-
Relevant electrical parts	MFP board (MFPB)

(2) Procedure

Step	Action	Control signal	Location of electrical components
1	Replace MFPB.	-	-

- Link to the layout drawings for related parts by each trouble code (S.62. C5372, C6901, C6902, C6903, CA051, CA052, CA053, CC170 - CC186, CC191 - CC214, CC216, CD211, CD212, CD241, CD242, CD261, CD262, CD271, CD401 - CD413, CE001, CE003 - CE305, CEEE1)

3.16.12 CD241, CD242

(1) Contents

Trouble type	Encryption ASIC setting error
Trouble code	CD241
Rank	C
Detection timing	Initialization error of the encrypted ASIC is detected during the machine is starting.
Trouble isolation	-
Relevant electrical parts	MFP board (MFPB)

Trouble type	Encryption ASIC mounting error
Trouble code	CD242
Rank	C
Detection timing	The faulty of the installation of encrypted ASIC is detected during the machine is starting.
Trouble isolation	-
Relevant electrical parts	MFP board (MFPB)

(2) Procedure

Step	Action	Control signal	Location of electrical components
1	Check the MFP board connector for proper connection and correct as necessary.	-	-
2	Replace MFPB.	-	-

- Link to the layout drawings for related parts by each trouble code (S.62. C5372, C6901, C6902, C6903, CA051, CA052, CA053, CC170 - CC186, CC191 - CC214, CC216, CD211, CD212, CD241, CD242, CD261, CD262, CD271, CD401 - CD413, CE001, CE003 - CE305, CEEE1)

3.16.13 CD261

(1) Contents

Trouble type	USB host board failure
Trouble code	CD261
Rank	C
Detection timing	• When a failure is detected in USB host board included in the local interface kit. • Non-standard USB device is connected.
Trouble isolation	-
Relevant electrical parts	• MFP board (MFPB) • USB host board (EK-606) • USB host board (EK-607)

(2) Procedure

Step	Action	Control signal	Location of electrical components
1	Check the operation with another USB device.	-	-
2	Check the USB host board connector for proper connection and correct as necessary.	-	-
3	Replace the USB host board	-	-
4	Replace MFPB.	-	-

- Link to the layout drawings for related parts by each trouble code (S.62. C5372, C6901, C6902, C6903, CA051, CA052, CA053, CC170 - CC186, CC191 - CC214, CC216, CD211, CD212, CD241, CD242, CD261, CD262, CD271, CD401 - CD413, CE001, CE003 - CE305, CEEE1)

3.16.14 CD262

(1) Contents

Trouble type	Extension network adapter installation error
Trouble code	CD262
Rank	C
Detection timing	• When the 2nd network card settings is set to “Set” but the upgrade kit (UK-208) is not installed. • Upgrade Kit (UK-208) is faulty.

Trouble isolation	-
Relevant electrical parts	-

(2) Procedure

Step	Action	Control signal	Location of electrical components
1	Check the settings of the Service Mode. [Service Mode] -> [Network Settings] -> [2nd Network Setting] -> [2nd network card settings]	-	-
2	Check the UK-208 connector for proper connection and correct as necessary.	-	-
3	Check the UK-209 and DSIPB for proper connection and correct as necessary.	-	-
4	Update the PRCB firmware.	-	-
5	Reinstall the UK-208.	-	-
6	Reinstall the UK-209 or DSIPB.	-	-

- Link to the layout drawings for related parts by each trouble code (S.62. C5372, C6901, C6902, C6903, CA051, CA052, CA053, CC170 - CC186, CC191 - CC214, CC216, CD211, CD212, CD241, CD242, CD261, CD262, CD271, CD401 - CD413, CE001, CE003 - CE305, CEEE1)

3.16.15 CD271

(1) Contents

Trouble type	i-Option activated and additional memory not installed
Trouble code	CD271
Rank	C
Detection timing	While the i-Option is activated, the additional memory included in UK-204 is not installed.
Trouble isolation	-
Relevant electrical parts	• MFP board (MFPB) • Memory board/2 (MEMB/2; UK-204)

(2) Procedure

Step	Action	Control signal	Location of electrical components
1	Check the MEMB/2 for proper connection and correct as necessary.	-	-
2	Replace MEMB/2	-	-
3	Replace MFPB.	-	-

- Link to the layout drawings for related parts by each trouble code (S.62. C5372, C6901, C6902, C6903, CA051, CA052, CA053, CC170 - CC186, CC191 - CC214, CC216, CD211, CD212, CD241, CD242, CD261, CD262, CD271, CD401 - CD413, CE001, CE003 - CE305, CEEE1)

3.16.16 CD272

(1) Contents

Trouble type	i-Option activated and additional memory and HDD not installed
Trouble code	CD272
Rank	C
Detection timing	While the i-Option is activated, the additional memory included in UK-204 and the HDD are not installed.
Trouble isolation	-
Relevant electrical parts	• MFP board (MFPB) • Hard disk • Memory board/2 (MEMB/2; UK-204)

(2) Procedure

Step	Action	Control signal	Location of electrical components
1	Check MEMB/2 for proper connection and correct as necessary.	-	-
2	Access [Service Mode] -> [System 2] -> [HDD] and check to see if “Installed” is selected.	-	-
3	Replace MEMB/2	-	-
4	Replace the hard disk.	-	-
5	Replace MFPB.	-	-

- Link to the layout drawings for related parts by each trouble code (S.85. CD010, CD272, CE002)

3.16.17 CD3##

(1) Contents

Trouble type	Nonvolatile data error
Trouble code	CD3##
Rank	-
Detection timing	Abnormality is detected by the abnormal check of each nonvolatile data.
Trouble isolation	-

- Trouble code [C-D370] will be displayed when multiple errors (over 5) of nonvolatile data are detected, which can be restored with one restoration command.
- Data backup will be automatically performed every hour. Backup can also be performed manually with the following setting.
  [Service Mode] -> [Enhanced Security] -> [Memory Data Backup]

1. When a trouble caused by nonvolatile data error occurs, the screen below appears.

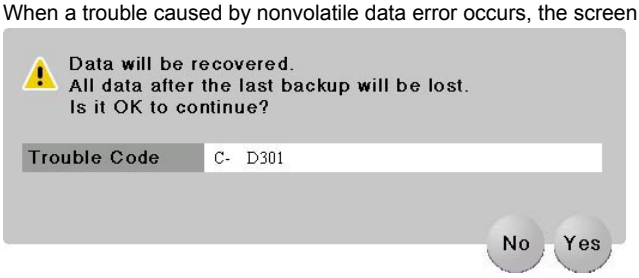

2. Select [Yes].
3. The screen will be shifted to the data restoration screen to perform data restoration.
   NOTE
   - **When the restoration is performed in a short time, data restoration screen may not be displayed.**

4. Check the message which indicates that the data restoration was successfully conducted. Turn OFF the main power switch and turn it ON again more than 10 seconds after.
   NOTE
   - **In case it failed to restore data, return to the trouble code screen.**

3.16.18 CD370

(1) Contents

Trouble type	Nonvolatile data multiple errors
Trouble code	CD370
Rank	C
Detection timing	Multiple errors (over 5) are detected by the abnormal check of each nonvolatile data.
Trouble isolation	-

(2) Procedure

Step	Action	Control signal	Location of electrical components
1	Refer to CD3##.	-	-

3.16.19 CD390

(1) Contents

Trouble type	Nonvolatile data checksum error
Trouble code	CD390
Rank	C
Detection timing	C-D390 code is normally shown when the MFP board is replaced with a new one.
Trouble isolation	-
Relevant electrical parts	-

(2) Procedure

Step	Action	Control signal	Location of electrical components
1	Wait until “Recover Data” appears. (MFP will reboot maximum 2 times by itself, it may take 5 minutes.) Touch the “Recover Data” button and follow the instructions that appear on the control panel to restore (backup) data.	-	-

3.16.20 CD3A0

(1) Contents

Trouble type	Counter error

Trouble code	CD3A0
Rank	C
Detection timing	The total counter values provided by the MFP board and the SSD board are different.
Trouble isolation	-
Relevant electrical parts	• MFP board (MFPB) • SSD board (SSDB)

(2) Procedure

Step	Action	Control signal	Location of electrical components
1	If this error occurs temporarily due to the use of the board removed from another machine, reinstall the original board.	-	-
2	Replace the current MFPB with a new one.	-	-

- Link to the layout drawings for related parts by each trouble code (S.88. CD3A0)

3.16.21 CD401, CD402, CD403, CD404, CD405, CD406, CD407, CD411, CD412, CD413

(1) Contents

Trouble type	NACK command incorrect
	ACK command incorrect
	Checksum error
	Receiving packet incorrect
	Receiving packet analysis error
	ACK receiving timeout
	Retransmission timeout
	Touch panel board error
	Touch panel type mismatch
	Electrostatic touch panel operation mode error
Trouble code	CD401
	CD402
	CD403
	CD404
	CD405
	CD406
	CD407
	CD411
	CD412
	CD413
Rank	C
Detection timing	When abnormality is found in the communication of controller.
Trouble isolation	-
Relevant electrical parts	MFP board (MFPB)

(2) Procedure

Step	Action	Control signal	Location of electrical components
1	Check whether there is a strong electromagnetic noise source near the main body.	-	-
2	Check the connectors on MFPB for proper connection and correct as necessary.	-	-
3	Replace MFPB	-	-

- Link to the layout drawings for related parts by each trouble code (S.62. C5372, C6901, C6902, C6903, CA051, CA052, CA053, CC170 - CC186, CC191 - CC214, CC216, CD211, CD212, CD241, CD242, CD261, CD262, CD271, CD401 - CD413, CE001, CE003 - CE305, CEEE1)

3.16.22 CDC##

(1) Contents

Trouble type	Trouble related to security
Trouble code	CDC##
Rank	-
Detection timing	Contact the responsible people of KM before taking some countermeasures.

Trouble isolation	-

3.16.23 CDF50, CDF70, CDFA0

(1) Contents

Trouble type	ASIC image version failure
	ASIC image access failure
	ASIC image error
Trouble code	CDF50
	CDF70
	CDFA0
Rank	C
Detection timing	Communication error is detected between the MFP board (MFPB) and the CCD board (CCDB).
Trouble isolation	-
Relevant electrical parts	• MFP board (MFPB) • CCD board (CCDB)

(2) Procedure

Step	Action	Control signal	Location of electrical components
1	Check the connector between MFPB and CCDB for proper connection, and correct as necessary.	-	-
2	Update the firmware.	-	-
3	Replace CCDB	-	-
4	Replace MFPB	-	-

- Link to the layout drawings for related parts by each trouble code (S.69. C6704, C6752, CDF50, CDF70, CDFA0)

3.16.24 CDF51, CDF71, CDFA1

(1) Contents

Trouble type	ASIC image version failure (back side)	
	ASIC image access failure (back side)	
	ASIC image error (back side)	
Trouble code	CDF51	
	CDF71	
	CDFA1	
Rank	C	
Detection timing	<When DF-701 is installed>	Communication error is detected between the MFP board (MFPB) and the dual scan image processing board (DSIPB).
Trouble isolation	-	
Relevant electrical parts	• MFP board (MFPB) • Dual scan image processing board (DSIPB; DF-701)	

(2) Procedure

Step	Action	Control signal	Location of electrical components
1	Check the connector between MFPB and DSIPB for proper connection, and correct as necessary.	-	-
2	Update the firmware.	-	-
3	Replace DSIPB	-	-
4	Replace MFPB	-	-

- Link to the layout drawings for related parts by each trouble code (S.74. C6911, C6912, C6913, CDF51, CDF71, CDFA1)

3.17 CE###

3.17.1 CE001, CE003, CE004, CE005, CE006, CE007

(1) Contents

Trouble type	Abnormal message queue
	Task error
	Event error
	Memory access error
	Header access error
	DIMM initialize error
Trouble code	CE001

	CE003
	CE004
	CE005
	CE006
	CE007
Rank	C
Detection timing	MFP board (MFPB) is faulty.
Trouble isolation	-
Relevant electrical parts	MFP board (MFPB)

(2) Procedure

Step	Action	Control signal	Location of electrical components
1	Check the connectors on MFPB for proper connection and correct as necessary.	-	-
2	Replace MFPB	-	-

- Link to the layout drawings for related parts by each trouble code (S.62. C5372, C6901, C6902, C6903, CA051, CA052, CA053, CC170 - CC186, CC191 - CC214, CC216, CD211, CD212, CD241, CD242, CD261, CD262, CD271, CD401 - CD413, CE001, CE003 - CE305, CEEE1)

3.17.2 CE002

(1) Contents

Trouble type	Message and method parameter failure
Trouble code	CE002
Rank	C
Detection timing	MFP board (MFPB) is faulty.
Trouble isolation	-
Relevant electrical parts	• MFP board (MFPB) • Hard disk

(2) Procedure

Step	Action	Control signal	Location of electrical components
1	Turn OFF the main power switch and turn it ON again, and conduct the following setting. [Service Mode] -> [System 1] -> [Initialization] -> [Clear All Data].	-	-
2	Format hard disk	-	-
3	Replace the hard disk.	-	-
4	Replace MFPB	-	-

- Link to the layout drawings for related parts by each trouble code (S.85. CD010, CD272, CE002)

3.17.3 CE101

(1) Contents

Trouble type	Browser finish detected
Trouble code	CE101
Rank	C
Detection timing	• The browser is automatically recovered (restarted) after the main body detected that the browser (separate process) has stopped with fault. • When the “Malfunction finish is detected over predetermined number of times” or “the browser task process is except in idle (printing, etc)”.
Trouble isolation	-
Relevant electrical parts	MFP board (MFPB)

(2) Procedure

Step	Action	Control signal	Location of electrical components
1	Check the connectors on MFPB for proper connection and correct as necessary.	-	-
2	Replace MFPB.	-	-

- Link to the layout drawings for related parts by each trouble code (S.62. C5372, C6901, C6902, C6903, CA051, CA052, CA053, CC170 - CC186, CC191 - CC214, CC216, CD211, CD212, CD241, CD242, CD261, CD262, CD271, CD401 - CD413, CE001, CE003 - CE305, CEEE1)

3.17.4 CE201

(1) Contents

Trouble type	Transmission operation log storage fault
Trouble code	CE201
Rank	C
Detection timing	When the transmission log storage failed, it repeats retrial until transmission operation log is stored. The trouble is detected when the retrial failed for predetermined number of times.
Trouble isolation	-
Relevant electrical parts	MFP board (MFPB)

(2) Procedure

Step	Action	Control signal	Location of electrical components
1	Check the connectors on MFPB for proper connection and correct as necessary.	-	-
2	Replace MFPB.	-	-

- Link to the layout drawings for related parts by each trouble code (S.62. C5372, C6901, C6902, C6903, CA051, CA052, CA053, CC170 - CC186, CC191 - CC214, CC216, CD211, CD212, CD241, CD242, CD261, CD262, CD271, CD401 - CD413, CE001, CE003 - CE305, CEEE1)

3.17.5 CE301, CE302, CE303, CE304, CE305

(1) Contents

Trouble type	Referring incorrect memory
	Incorrect command
	Finished due to error inside Qt library
	Finished due to error outside Qt library
	Program forced to stop
Trouble code	CE301
	CE302
	CE303
	CE304
	CE305
Rank	C
Detection timing	Error occurred with the process inside the MFP controller
Trouble isolation	-
Relevant electrical parts	MFP board (MFPB)

(2) Procedure

Step	Action	Control signal	Location of electrical components
1	Check the connectors on MFPB for proper connection and correct as necessary.	-	-
2	Replace MFPB	-	-
3	Acquire the debug logs in [Service Mode] -> [Debug Settings] and analyze them.	-	-

- Link to the layout drawings for related parts by each trouble code (S.62. C5372, C6901, C6902, C6903, CA051, CA052, CA053, CC170 - CC186, CC191 - CC214, CC216, CD211, CD212, CD241, CD242, CD261, CD262, CD271, CD401 - CD413, CE001, CE003 - CE305, CEEE1)

3.17.6 CED01

(1) Contents

Trouble type	The authentication application information does not exist in the hard disk/SSD board in the enhanced server authentication state.
Trouble code	CED01
Rank	C
Detection timing	With “Enhanced Server Authentication” set, no authentication application registration information is found in the hard disk or the SSD board (SSDB).
Trouble isolation	-
Relevant electrical parts	• SSD board (SSDB) • Hard disk

(2) Procedure

Step	Action	Control signal	Location of electrical components
1	Turn OFF the main power switch, wait for 10 sec. or more, and turn ON the main power switch.	-	-
2	Check the connector from MFPB to Hard disk for proper connection and correct as necessary.	-	-
3	Check the connector from SSDB to MFPB for proper connection and correct as necessary.	-	-
4	Logically format the hard disk.	-	-
5	Replace the hard disk	-	-
6	If the above actions do not solve the problem, contact KM.	-	-

- Link to the layout drawings for related parts by each trouble code (S.89. CED01)

3.17.7 CEEE1

(1) Contents

Trouble type	MFP board malfunction
Trouble code	CEEE1
Rank	C
Detection timing	MFP board (MFPB) is faulty.
Trouble isolation	-
Relevant electrical parts	MFP board (MFPB)

(2) Procedure

Step	Action	Control signal	Location of electrical components
1	Check the connectors on MFPB for proper connection and correct as necessary.	-	-
2	Replace MFPB	-	-

- Link to the layout drawings for related parts by each trouble code (S.62. C5372, C6901, C6902, C6903, CA051, CA052, CA053, CC170 - CC186, CC191 - CC214, CC216, CD211, CD212, CD241, CD242, CD261, CD262, CD271, CD401 - CD413, CE001, CE003 - CE305, CEEE1)

3.17.8 CEEE2

(1) Contents

Trouble type	Scanner section malfunction
Trouble code	CEEE2
Rank	A
Detection timing	A scanner part is faulty.
Trouble isolation	-
Relevant electrical parts	• LED exposure unit (LU201) • CCD board (CCDB) • Scanner drive board (SCDB)

(2) Procedure

Step	Action	Control signal	Location of electrical components
1	Correct the connector connection between CCDB and SCDB if faulty.	-	-
2	Replace SCDB	-	-
3	Replace CCDB	-	-

- Link to the layout drawings for related parts by each trouble code (S.90. CEEE2)

3.17.9 CEEE3

(1) Contents

Trouble type	Printer control board malfunction
Trouble code	CEEE3
Rank	A
Detection timing	Printer control board (PRCB) is faulty.
Trouble isolation	-
Relevant electrical parts	Printer control board (PRCB)

(2) Procedure

Step	Action	Control signal	Location of electrical components
1	Check the PRCB connector for proper connection and correct as necessary.	-	-
2	Replace PRCB	-	-

- Link to the layout drawings for related parts by each trouble code (S.1. C0002, C4802, C5601, CC15C, CEEE3)

4. ABORT CODE

4.1 Troubleshooting of the abort code

- The machine displays an abort code (CF###) on the control panel as it becomes unable to process tasks properly through its software control.
- When the system program is aborted, check the electrical component, unit, option, and connection relating to the specific type of the abort condition.

4.1.1 Contents

Trouble type	Abort code
Trouble code	CF001 to CFF80
Rank	C
Detection timing	-
Trouble isolation	-
Relevant electrical parts	• MFP board (MFPB) • Memory board/1 (MEMB/1) • Memory board/2 (MEMB/2) • Dual scan image processing board (DSIPB) • DSC board/1 (DSCB/1: Security kit SC-508) • DSC board/2 (DSCB/2: Security kit SC-508) • Hard disk (HDD)

4.1.2 Procedure

- When an abort code occurs, take a check and action in the following procedure.

Step	Section	Check Item	Result	Action
1	Main power switch	Turn OFF and ON the main power switch, and check if the Abort code appears again.	NO	When not reappearing, continuous use is carried out, and it is checked whether an abort code occurs.
2	Connector connection	Check the connector for proper connection and correct as necessary. • MFP board (MFPB) • Memory board/1 (Standard memory: MEMB/1) • Memory board/2 (Expansion memory: MEMB/2) • Dual scan image processing board (DSIPB) • DSC board/1 (DSCB/1: SC-508) • DSC board/2 (DSCB/2: SC-508) • Hard disc (HDD)	NO	It will correct, if connector connection has abnormalities.
3	Firmware	Update the firmware to the latest version, and check if the Abort code appears again.	NO	After conducting firmware updating, check the firmware version No. and confirm that the firmware has been normally updated.
4	Memory Check	Conduct the following setting. [Service Mode] -> [State Confirmation] -> [Memory/ HDD Adj.] -> [Memory Check] -> [Rough Check].	NO	When "NG" is displayed, replace the appropriate memory or PWB. • WORK0: Standard memory (MEMB/1) • WORK1: Expansion memory (MEMB/2) • FILE0,1: MFP board (MFPB) • FILE2,3: not used • FILE4,5: Dual scan image processing board (DSIPB)
5	HDD R/W Check	Conduct the following setting. [Service Mode] -> [State Confirmation] -> [Memory/ HDD Adj.] -> [HDD R/W Check].	NO	When "NG" is displayed, replace the hard disk (HDD).
6	JPEG Check	Conduct the following setting. [Service Mode] -> [State Confirmation] -> [Memory/ HDD Adj.] -> [JPEG Check].	NO	When "NG" is displayed, Check the MFPB.
7	MFP board	Replace MFPB	NO	Other electric parts indicated to Component of abort code list are replaceed.

4.2 CF0##

Code	Item		Component	Rank
CF001	CT_singleList table abnormal	An exceptional instance occurred due to the unexpected parameter in the system F/W.	MFP board (MFPB)	C
CF004	CT_queue full abnormal			
CF011	Array link abnormal			
CF012	FAT link abnormal			
CF013	File size abnormal			
CF021	setDelayMessage Table OverFlow			
CF023	MsgQue OverFlow			

Code	Item		Component	Rank
CF033	setDivTbl() limitation over			
CF061	IdeCommand_Set() status Abnormal			
CF062	IdeCommand_Set() parameter Abnormal			

4.3 CF1##

Code	Item		Component	Rank
CF112	Compress table OverFlow	Compression malfunctions	MFP board (MFPB)	C
CF113	Compress table check			
CF122	Expand Table OverFlow			

4.4 CF2##

Code	Item		Component	Rank
CF211	setParameterBandColorPlane() Table OverFlow	An exceptional instance occurred due to the unexpected parameter in the system F/W.	MFP board (MFPB)	C

4.5 CF3##

Code	Item		Component	Rank
CF300	IR Bus Check Timeout	Image transfer error on IR input bus	MFP board (MFPB)	C

4.6 CF4##

Code	Item		Component	Rank
CF411	Parity error	Communication error (between IR-systems)	MFP board (MFPB)	C
CF412	Parity error			
CF421	Overrun error			
CF422	Overrun error			
CF431	Parity error + Overrun error			
CF432	Parity error + Overrun error			
CF441	Framing error			
CF442	Framing error			
CF451	Parity error + Framing error			
CF452	Parity error + Framing error			
CF461	Overrun error + Framing error			
CF462	Overrun error + Framing error			
CF471	Parity error + Overrun error + Framing error			
CF472	Parity error + Overrun error + Framing error			

4.7 CF5##

Code	Item		Component	Rank
CF510	Parity error	Communication error (IR detected)	MFP board (MFPB)	C
CF520	Framing error			
CF530	Parity error + Framing error			
CF540	Overrun error			
CF550	Parity error + Overrun error			
CF560	Overrun error + Framing error			
CF570	Parity error + Overrun error + Framing error			
CF580	Frame distortion of DF			

4.8 CF6##

Code	Item		Component	Rank
CF600	Report receiving of print start that is out of sequence	An exceptional instance occurred due to the unexpected parameter in the system F/W.	MFP board (MFPB)/ Engine	C

Code	Item		Component	Rank
CF601	Report receiving of paper feeding that is out of sequence			
CF604	Outside IF/Command queue		MFP board (MFPB)	
CF614	“Output sequence” queue			
CF624	Panel LCD date queue			

4.9 CF7##

Code	Item		Component	Rank
CF704	Common data “Delete-waiting HDD accumulated job ID” queue	An exceptional instance occurred due to the unexpected parameter in the system F/W.	MFP board (MFPB)	C
CF714	IRC/Command queue			
CF724	Engine/Command queue		MFP board (MFPB)/ Engine	
CF734	Panel/Command queue		MFP board (MFPB)/ Control Panel	
CF744	File memory transfer start-waiting command queue		MFP board (MFPB)	
CF754	File memory compression requesting command queue			
CF764	Panel instruction delete job queue			
CF774	Warning delete job queue			
CF784	Application instruction delete job queue			
CF794	Output page information for duplex back side queue			
CF7A4	Paper feed completion output pate information queue			
CF7B4	Exposure compaction output page information queue			
CF7C4	Pre-discharge completion output page information queue			
CF7D4	Touch panel coordinate data queue			
CF7E4	Direct key data queue			
CF7F4	Scan sequence queue			

4.10 CF8##

Code	Item	Component	Rank
CF802	SIO sending port...ENG	MFP board (MFPB)/ Engine	C
CF806	SIO sending port...IRC	MFP board (MFPB)	
CF807	SIO sending port...DF		
CF808	Transmission buffer overflow (DSC1)	DSC board/1 (DSCB/1: Security kit SC-508)	
CF809	Transmission buffer overflow (DSC2)	DSC board/2 (DSCB/2: Security kit SC-508)	
CF815	SIO sending port...PIC/PIC terminal	MFP board (MFPB)	
CF8ED	SIO sending port...EPNet		

4.11 CF9##

Code	Item	Component	Rank
CF902	SIO receiving port...ENG	MFP board (MFPB)/ Engine	C
CF906	SIO receiving port...IRC	MFP board (MFPB)	
CF907	SIO receiving port...DF		
CF908	Reception buffer overflow (DSC1)	DSC board/1 (DSCB/1; Security kit SC-508)	
CF909	Reception buffer overflow (DSC2)	DSC board/2 (DSCB/2; Security kit SC-508)	
CF915	SIO receiving port...PIC/PIC terminal	MFP board (MFPB)	

Code	Item	Component	Rank
CF9ED	SIO receiving port...EPNet		

4.12 CFA##

Code	Item		Component	Rank
CFA01	getOneImgTransInfoFromTh() No applied thread	An exceptional instance occurred due to the unexpected parameter in the system F/W.	MFP board (MFPB)	C
CFA03	setTransBandAndRepeatNum() error			
CFA06	getOneImgIndexNumFromTh() No applied thread			
CFA11	cancelTransExec() No applied thread			
CFA12	ImgTransInfo No space			
CFA13	Clear Buffer Sequence error			
CFA14	Application error inside the MFP board		MFP board (MFPB) Memory board/1 Memory board/2 Hard disc (HDD)	
CFA15	Global semaphore time out (ten seconds)		MFP board (MFPB)/ Hard disk (HDD)	
CFA16	Thread software error (upper parameter error)			
CFA17	Thread error caused by buffer sequence error			
CFA18	Thread error detected in the VD state at DMA00 startup.			
CFA50	IGC control error	DB error		
CFA51		IGC internal error		

4.13 CFB##

4.13.1 CFB0#

Code	Item	Component	Rank
CFB00	ASIC1200 first sheet DMA00	• MFP board (MFPB) • DSC board/1 (DSCB/1) • DSC board/2 (DSCB/2) • Dual scan image processing board (DSIPB) (when DF-701 or UK-209 is installed)	C
CFB01	ASIC1200 first sheet DMA01		
CFB02	ASIC1200 first sheet DMA02		
CFB03	ASIC1200 first sheet DMA03		
CFB04	ASIC1200 first sheet DMA04		
CFB05	ASIC1200 first sheet DMA05		
CFB06	ASIC1200 first sheet DMA06		
CFB07	ASIC1200 first sheet DMA07		
CFB08	ASIC1200 first sheet DMA08		
CFB09	ASIC1200 first sheet DMA09		
CFB0A	ASIC1200 first sheet DMA10		
CFB0B	ASIC1200 first sheet DMA11		
CFB0C	ASIC1200 first sheet DMA12		
CFB0D	ASIC1200 first sheet DMA13		
CFB0E	ASIC1200 first sheet DMA14		
CFB0F	ASIC1200 first sheet DMA15		

4.13.2 CFB1#

Code	Item	Component	Rank
CFB10	ASIC1200 first sheet DMA16	• MFP board (MFPB) • DSC board/1 (DSCB/1) • DSC board/2 (DSCB/2) • Dual scan image processing board (DSIPB) (when DF-701 or UK-209 is installed)	C
CFB11	ASIC1200 first sheet DMA17		
CFB12	ASIC1200 first sheet DMA18		
CFB13	ASIC1200 first sheet DMA19		
CFB14	ASIC1200 first sheet DMA20		
CFB15	ASIC1200 first sheet DMA21		
CFB16	ASIC1200 first sheet DMA22		
CFB17	ASIC1200 first sheet DMA23		
CFB18	ASIC1200 first sheet DMA24		
CFB19	ASIC1200 first sheet DMA25		
CFB1A	ASIC1200 first sheet DMA26		
CFB1B	ASIC1200 first sheet DMA27		

Code	Item	Component	Rank
CFB1C	ASIC1200 first sheet DMA28		
CFB1D	ASIC1200 first sheet DMA29		
CFB1E	ASIC1200 first sheet DMA30		
CFB1F	ASIC1200 first sheet DMA31		

4.13.3 CFB2#

Code	Item	Component	Rank
CFB20	ASIC1200 first sheet DMA32	• MFP board (MFPB) • DSC board/1 (DSCB/1) • DSC board/2 (DSCB/2) • Dual scan image processing board (DSIPB) (when DF-701 or UK-209 is installed)	C

4.13.4 CFB3#

Code	Item	Component	Rank
CFB30	ASIC second sheet DMA00	• MFP board (MFPB) • DSC board/1 (DSCB/1) • DSC board/2 (DSCB/2) • Dual scan image processing board (DSIPB) (when DF-701 or UK-209 is installed)	C
CFB31	ASIC second sheet DMA01		
CFB32	ASIC second sheet DMA02		
CFB33	ASIC second sheet DMA03		
CFB34	ASIC second sheet DMA04		
CFB35	ASIC second sheet DMA05		
CFB36	ASIC second sheet DMA06		
CFB37	ASIC second sheet DMA07		
CFB38	ASIC second sheet DMA08		
CFB39	ASIC second sheet DMA09		
CFB3A	ASIC second sheet DMA10		
CFB3B	ASIC second sheet DMA11		
CFB3C	ASIC second sheet DMA12		
CFB3D	ASIC second sheet DMA13		
CFB3E	ASIC second sheet DMA14		
CFB3F	ASIC second sheet DMA15		

4.13.5 CFB4#

Code	Item	Component	Rank
CFB40	ASIC second sheet DMA16	• MFP board (MFPB) • DSC board/1 (DSCB/1) • DSC board/2 (DSCB/2) • Dual scan image processing board (DSIPB) (when DF-701 or UK-209 is installed)	C
CFB41	ASIC second sheet DMA17		
CFB42	ASIC second sheet DMA18		
CFB43	ASIC second sheet DMA19		
CFB44	ASIC second sheet DMA20		
CFB45	ASIC second sheet DMA21		
CFB46	ASIC second sheet DMA22		
CFB47	ASIC second sheet DMA23		
CFB48	ASIC second sheet DMA24		
CFB49	ASIC second sheet DMA25		
CFB4A	ASIC second sheet DMA26		
CFB4B	ASIC second sheet DMA27		
CFB4C	ASIC second sheet DMA28		
CFB4D	ASIC second sheet DMA29		
CFB4E	ASIC second sheet DMA30		
CFB4F	ASIC second sheet DMA31		

4.13.6 CFB5#

Code	Item	Component	Rank
CFB50	ASIC second sheet DMA32	• MFP board (MFPB) • DSC board/1 (DSCB/1) • DSC board/2 (DSCB/2)	C

Code	Item	Component	Rank
		• Dual scan image processing board (DSIPB) (when DF-701 or UK-209 is installed)	

4.13.7 CFB6#

Code	Item	Component	Rank
CFB60	ASIC third sheet DMA00	• MFP board (MFPB) • DSC board/1 (DSCB/1) • DSC board/2 (DSCB/2) • Dual scan image processing board (DSIPB) (when DF-701 or UK-209 is installed)	C
CFB61	ASIC third sheet DMA01		
CFB62	ASIC third sheet DMA02		
CFB63	ASIC third sheet DMA03		
CFB64	ASIC third sheet DMA04		
CFB65	ASIC third sheet DMA05		
CFB66	ASIC third sheet DMA06		
CFB67	ASIC third sheet DMA07		
CFB68	ASIC third sheet DMA08		
CFB69	ASIC third sheet DMA09		
CFB6A	ASIC third sheet DMA10		
CFB6B	ASIC third sheet DMA11		
CFB6C	ASIC third sheet DMA12		
CFB6D	ASIC third sheet DMA13		
CFB6E	ASIC third sheet DMA14		
CFB6F	ASIC third sheet DMA15		

4.13.8 CFB7#

Code	Item	Component	Rank
CFB70	ASIC third sheet DMA16	• MFP board (MFPB) • DSC board/1 (DSCB/1) • DSC board/2 (DSCB/2) • Dual scan image processing board (DSIPB) (when DF-701 or UK-209 is installed)	C
CFB71	ASIC third sheet DMA17		
CFB72	ASIC third sheet DMA18		
CFB73	ASIC third sheet DMA19		
CFB74	ASIC third sheet DMA20		
CFB75	ASIC third sheet DMA21		
CFB76	ASIC third sheet DMA22		
CFB77	ASIC third sheet DMA23		
CFB78	ASIC third sheet DMA24		
CFB79	ASIC third sheet DMA25		
CFB7A	ASIC third sheet DMA26		
CFB7B	ASIC third sheet DMA27		
CFB7C	ASIC third sheet DMA28		
CFB7D	ASIC third sheet DMA29		
CFB7E	ASIC third sheet DMA30		
CFB7F	ASIC third sheet DMA31		

4.13.9 CFB8#

Code	Item	Component	Rank
CFB80	ASIC third sheet DMA32	• MFP board (MFPB) • DSC board/1 (DSCB/1) • DSC board/2 (DSCB/2) • Dual scan image processing board (DSIPB) (when DF-701 or UK-209 is installed)	C

4.13.10 CFB9#

Code	Item	Component	Rank
CFB90	ASIC7 DMA A	• MFP board (MFPB) • DSC board/1 (DSCB/1) • DSC board/2 (DSCB/2) • Dual scan image processing board	C
CFB91	ASIC7 DMA C		

Code	Item	Component	Rank
CFB92	ASIC7 DMA D	(DSIPB) (when DF-701 or UK-209 is installed)	

4.13.11 CFBA#

Code	Item	Component	Rank
CFBA0	ASIC first sheet interruption	• MFP board (MFPB) • DSC board/1 (DSCB/1) • DSC board/2 (DSCB/2) • Dual scan image processing board (DSIPB) (when DF-701 or UK-209 is installed)	C
CFBA1	ASIC second sheet interruption		
CFBA2	ASIC third sheet interruption		
CFBA3	ASIC7 interruption		

4.13.12 CFBB#

Code	Item	Component	Rank
CFBB0	ASIC first sheet common register setting	• MFP board (MFPB) • DSC board/1 (DSCB/1) • DSC board/2 (DSCB/2) • Dual scan image processing board (DSIPB) (when DF-701 or UK-209 is installed)	C
CFBB1	ASIC second sheet common register setting		
CFBB2	ASIC third sheet common register setting		
CFBB3	ASIC7 common register setting		

4.13.13 CFBC#

Code	Item	Component	Rank
CFBC0	ASIC first sheet BTC compression/extension unit	• MFP board (MFPB) • DSC board/1 (DSCB/1) • DSC board/2 (DSCB/2) • Dual scan image processing board (DSIPB) (when DF-701 or UK-209 is installed)	C
CFBC1	ASIC second sheet BTC compression/extension unit		
CFBC2	ASIC third sheet BTC compression/extension unit		
CFBC3	ASIC7 BTC compression/extension unit		

4.14 CFC##

4.14.1 CFC0#

Code	Item	Component	Rank
CFC00	ASIC1200 first sheet DMA00 error interruption	• MFP board (MFPB) • DSC board/1 (DSCB/1) • DSC board/2 (DSCB/2) • Dual scan image processing board (DSIPB) (when DF-701 or UK-209 is installed)	C
CFC01	ASIC1200 first sheet DMA01 error interruption		
CFC02	ASIC1200 first sheet DMA02 error interruption		
CFC03	ASIC1200 first sheet DMA03 error interruption		
CFC04	ASIC1200 first sheet DMA04 error interruption		
CFC05	ASIC1200 first sheet DMA05 error interruption		
CFC06	ASIC1200 first sheet DMA06 error interruption		
CFC07	ASIC1200 first sheet DMA07 error interruption		
CFC08	ASIC1200 first sheet DMA08 error interruption		
CFC09	ASIC1200 first sheet DMA09 error interruption		
CFC0A	ASIC1200 first sheet DMA10 error interruption		
CFC0B	ASIC1200 first sheet DMA11 error interruption		
CFC0C	ASIC1200 first sheet DMA12 error interruption		
CFC0D	ASIC1200 first sheet DMA13 error interruption		
CFC0E	ASIC1200 first sheet DMA14 error interruption		
CFC0F	ASIC1200 first sheet DMA15 error interruption		

4.14.2 CFC1#

Code	Item	Component	Rank
CFC10	ASIC1200 first sheet DMA16 error interruption	• MFP board (MFPB) • DSC board/1 (DSCB/1) • DSC board/2 (DSCB/2) • Dual scan image processing board (DSIPB) (when DF-701 or UK-209 is installed)	C
CFC11	ASIC1200 first sheet DMA17 error interruption		
CFC12	ASIC1200 first sheet DMA18 error interruption		
CFC13	ASIC1200 first sheet DMA19 error interruption		
CFC14	ASIC1200 first sheet DMA20 error interruption		
CFC15	ASIC1200 first sheet DMA21 error interruption		
CFC16	ASIC1200 first sheet DMA22 error interruption		

Code	Item	Component	Rank
CFC17	ASIC1200 first sheet DMA23 error interruption		
CFC18	ASIC1200 first sheet DMA24 error interruption		
CFC19	ASIC1200 first sheet DMA25 error interruption		
CFC1A	ASIC1200 first sheet DMA26 error interruption		
CFC1B	ASIC1200 first sheet DMA27 error interruption		
CFC1C	ASIC1200 first sheet DMA28 error interruption		
CFC1D	ASIC1200 first sheet DMA29 error interruption		
CFC1E	ASIC1200 first sheet DMA30 error interruption		
CFC1F	ASIC1200 first sheet DMA31 error interruption		

4.14.3 CFC2#

Code	Item	Component	Rank
CFC20	ASIC1200 first sheet DMA32 error interruption	• MFP board (MFPB) • DSC board/1 (DSCB/1) • DSC board/2 (DSCB/2) • Dual scan image processing board (DSIPB) (when DF-701 or UK-209 is installed)	C
CFC21	ASIC1200 first sheet watchdog timer error interruption		
CFC22	ASIC1200 first sheet image output interface had underrun		
CFC23	ASIC1200 first sheet image input interface had overflow		
CFC24	ASIC1200 first sheet LCD output interface had underrun		
CFC25	ASIC1200 first sheet JBIG core detected unknown marker		
CFC26	ASIC1200 first sheet JBIG core detected SC count overflow		
CFC27	SDTMDT is accessed during ASIC1200 first sheet soft reset active		
CFC28	DMA04 (table) is accessed during ASIC1200 first sheet soft reset active		
CFC29	DMA06 (FAX debug) is accessed during ASIC1200 first sheet soft reset active		
CFC2A	ASIC1200 first sheet SDTMDT had a timeout error		
CFC2B	ASIC1200 first sheet external bus (on main memory side) had a command error		
CFC2C	ASIC1200 first sheet external bus (on main memory side) had a master read error		
CFC2D	ASIC1200 first sheet external bus (on main memory side) had a master write error		
CFC2E	ASIC1200 first sheet external bus (on main memory side) had a timeout error		
CFC2F	ASIC1200 first sheet external bus (on sub memory side) had a command error		

4.14.4 CFC3#

Code	Item	Component	Rank
CFC30	ASIC1200 first sheet external bus (on sub memory side) had a master read error	• MFP board (MFPB) • DSC board/1 (DSCB/1) • DSC board/2 (DSCB/2) • Dual scan image processing board (DSIPB) (when DF-701 or UK-209 is installed)	C
CFC31	ASIC1200 first sheet external bus (on sub memory side) had a master write error		
CFC32	ASIC1200 first sheet external bus (on sub memory side) had a timeout error		

4.14.5 CFC4#

Code	Item	Component	Rank
CFC40	ASIC second sheet DMA00 error interruption	• MFP board (MFPB) • DSC board/1 (DSCB/1) • DSC board/2 (DSCB/2) • Dual scan image processing board (DSIPB) (when DF-701 or UK-209 is installed)	C
CFC41	ASIC second sheet DMA01 error interruption		
CFC42	ASIC second sheet DMA02 error interruption		
CFC43	ASIC second sheet DMA03 error interruption		
CFC44	ASIC second sheet DMA04 error interruption		
CFC45	ASIC second sheet DMA05 error interruption		
CFC46	ASIC second sheet DMA06 error interruption		
CFC47	ASIC second sheet DMA07 error interruption		
CFC48	ASIC second sheet DMA08 error interruption		
CFC49	ASIC second sheet DMA09 error interruption		
CFC4A	ASIC second sheet DMA10 error interruption		
CFC4B	ASIC second sheet DMA11 error interruption		
CFC4C	ASIC second sheet DMA12 error interruption		

Code	Item	Component	Rank
CFC4D	ASIC second sheet DMA13 error interruption		
CFC4E	ASIC second sheet DMA14 error interruption		
CFC4F	ASIC second sheet DMA15 error interruption		

4.14.6 CFC5#

Code	Item	Component	Rank
CFC50	ASIC second sheet DMA16 error interruption	• MFP board (MFPB) • DSC board/1 (DSCB/1) • DSC board/2 (DSCB/2) • Dual scan image processing board (DSIPB) (when DF-701 or UK-209 is installed)	C
CFC51	ASIC second sheet DMA17 error interruption		
CFC52	ASIC second sheet DMA18 error interruption		
CFC53	ASIC second sheet DMA19 error interruption		
CFC54	ASIC second sheet DMA20 error interruption		
CFC55	ASIC second sheet DMA21 error interruption		
CFC56	ASIC second sheet DMA22 error interruption		
CFC57	ASIC second sheet DMA23 error interruption		
CFC58	ASIC second sheet DMA24 error interruption		
CFC59	ASIC second sheet DMA25 error interruption		
CFC5A	ASIC second sheet DMA26 error interruption		
CFC5B	ASIC second sheet DMA27 error interruption		
CFC5C	ASIC second sheet DMA28 error interruption		
CFC5D	ASIC second sheet DMA29 error interruption		
CFC5E	ASIC second sheet DMA30 error interruption		
CFC5F	ASIC second sheet DMA31 error interruption		

4.14.7 CFC6#

Code	Item	Component	Rank
CFC60	ASIC second sheet DMA32 error interruption	• MFP board (MFPB) • DSC board/1 (DSCB/1) • DSC board/2 (DSCB/2) • Dual scan image processing board (DSIPB) (when DF-701 or UK-209 is installed)	C
CFC61	ASIC second sheet watchdog time error interruption		
CFC62	ASIC second sheet image output interface had underrun		
CFC63	ASIC second sheet image input interface had overflow		
CFC64	ASIC second sheet LCD output interface had underrun		
CFC65	ASIC second sheet JBIG core detected unknown marker		
CFC66	ASIC second sheet JBIG core detected SC count overflow		
CFC67	SDTMDT is accessed during ASIC second sheet soft reset active		
CFC68	DMA04 (table) is accessed during ASIC second sheet soft reset active		
CFC69	DMA06 (FAX debug) is accessed during ASIC second sheet soft reset active		
CFC6A	ASIC second sheet SDTMDT had a timeout error		
CFC6B	ASIC second sheet external bus (on main memory side) had a command error		
CFC6C	ASIC second sheet external bus (on main memory side) had a master read error		
CFC6D	ASIC second sheet external bus (on main memory side) had a master write error		
CFC6E	ASIC second sheet external bus (on main memory side) had a timeout error		
CFC6F	ASIC second sheet external bus (on sub memory side) had a command error		

4.14.8 CFC7#

Code	Item	Component	Rank
CFC70	ASIC second sheet external bus (on sub memory side) had a master read error	• MFP board (MFPB) • DSC board/1 (DSCB/1) • DSC board/2 (DSCB/2) • Dual scan image processing board (DSIPB) (when DF-701 or UK-209 is installed)	C
CFC71	ASIC second sheet external bus (on sub memory side) had a master write error		
CFC72	ASIC second sheet external bus (on sub memory side) had a timeout error		

4.14.9 CFC8#

Code	Item	Component	Rank
CFC80	ASIC third sheet DMA00 error interruption	• MFP board (MFPB) • DSC board/1 (DSCB/1) • DSC board/2 (DSCB/2) • Dual scan image processing board (DSIPB) (when DF-701 or UK-209 is installed)	C
CFC81	ASIC third sheet DMA01 error interruption		
CFC82	ASIC third sheet DMA02 error interruption		
CFC83	ASIC third sheet DMA03 error interruption		
CFC84	ASIC third sheet DMA04 error interruption		
CFC85	ASIC third sheet DMA05 error interruption		
CFC86	ASIC third sheet DMA06 error interruption		
CFC87	ASIC third sheet DMA07 error interruption		
CFC88	ASIC third sheet DMA08 error interruption		
CFC89	ASIC third sheet DMA09 error interruption		
CFC8A	ASIC third sheet DMA10 error interruption		
CFC8B	ASIC third sheet DMA11 error interruption		
CFC8C	ASIC third sheet DMA12 error interruption		
CFC8D	ASIC third sheet DMA13 error interruption		
CFC8E	ASIC third sheet DMA14 error interruption		
CFC8F	ASIC third sheet DMA15 error interruption		

4.14.10 CFC9#

Code	Item	Component	Rank
CFC90	ASIC third sheet DMA16 error interruption	• MFP board (MFPB) • DSC board/1 (DSCB/1) • DSC board/2 (DSCB/2) • Dual scan image processing board (DSIPB) (when DF-701 or UK-209 is installed)	C
CFC91	ASIC third sheet DMA17 error interruption		
CFC92	ASIC third sheet DMA18 error interruption		
CFC93	ASIC third sheet DMA19 error interruption		
CFC94	ASIC third sheet DMA20 error interruption		
CFC95	ASIC third sheet DMA21 error interruption		
CFC96	ASIC third sheet DMA22 error interruption		
CFC97	ASIC third sheet DMA23 error interruption		
CFC98	ASIC third sheet DMA24 error interruption		
CFC99	ASIC third sheet DMA25 error interruption		
CFC9A	ASIC third sheet DMA26 error interruption		
CFC9B	ASIC third sheet DMA27 error interruption		
CFC9C	ASIC third sheet DMA28 error interruption		
CFC9D	ASIC third sheet DMA29 error interruption		
CFC9E	ASIC third sheet DMA30 error interruption		
CFC9F	ASIC third sheet DMA31 error interruption		

4.14.11 CFCA#

Code	Item	Component	Rank
CFCA0	ASIC third sheet DMA32 error interruption	• MFP board (MFPB) • DSC board/1 (DSCB/1) • DSC board/2 (DSCB/2) • Dual scan image processing board (DSIPB) (when DF-701 or UK-209 is installed)	C
CFCA1	ASIC third sheet watchdog timer error interruption		
CFCA2	ASIC third sheet image output interface had underrun		
CFCA7	SDTMDT is accessed during ASIC third sheet soft reset active		
CFCA8	DMA04 (table) is accessed during ASIC third sheet soft reset active		
CFCA9	DMA06 (FAX debug) is accessed during ASIC third sheet soft reset active		
CFCAA	ASIC third sheet SDTMDT had a timeout error		
CFCAB	ASIC third sheet external bus (on main memory side) had a command error		
CFCAC	ASIC third sheet external bus (on main memory side) had a master read error		
CFCAD	ASIC third sheet external bus (on main memory side) had a master write error		
CFCAE	ASIC third sheet external bus (on main memory side) had a timeout error		
CFCAF	ASIC third sheet external bus (on sub memory side) had a command error		

4.14.12 CFCB#

Code	Item	Component	Rank
CFCB0	ASIC third sheet external bus (on sub memory side) had a master read error	• MFP board (MFPB) • DSC board/1 (DSCB/1) • DSC board/2 (DSCB/2) • Dual scan image processing board (DSIPB) (when DF-701 or UK-209 is installed)	C
CFCB1	ASIC third sheet external bus (on sub memory side) had a master write error		
CFCB2	ASIC third sheet external bus (on sub memory side) had a timeout error		

4.14.13 CFCC#

Code	Item	Component	Rank
CFCC0	ASIC7 DMA_A error interruption	• MFP board (MFPB) • DSC board/1 (DSCB/1) • DSC board/2 (DSCB/2) • Dual scan image processing board (DSIPB) (when DF-701 or UK-209 is installed)	C
CFCC1	ASIC7 DMA_C error interruption		
CFCC2	ASIC7 DMA_D error interruption		
CFCC3	ASIC7 watchdog timer error interruption		
CFCC4	ASIC7 PCI slave error		
CFCC5	ASIC7 JPEG related interruption during internal processing at DMA_A		
CFCC6	ASIC7 JPEG related interruption during internal processing at DMA_A		
CFCC7	ASIC7 JPEG related interruption during internal processing at DMA_A		
CFCC8	ASIC7 JPEG related interruption during internal processing at DMA_A		
CFCC9	ASIC7 JPEG related interruption during internal processing at DMA_A		
CFCCA	ASIC7 JPEG related interruption during internal processing at DMA_A		
CFCCB	ASIC7 JPEG related interruption during internal processing at DMA_A, error interruption		
CFCCC	ASIC7 JPEG related interruption during internal processing at DMA_A		
CFCCD	ASIC7 JPEG related interruption during internal processing at DMA_A		
CFCCE	ASIC7 JPEG related interruption with multiple statuses during internal processing at DMA_A		
CFCCF	ASIC7 no EOI marker after the completion of transmitting the amount of codes set during expansion at DMA_A		

4.14.14 CFCD#

Code	Item	Component	Rank
CFCD0	ASIC7 compressed data go beyond the set value during compression at DMA_A	• MFP board (MFPB) • DSC board/1 (DSCB/1) • DSC board/2 (DSCB/2) • Dual scan image processing board (DSIPB) (when DF-701 or UK-209 is installed)	C
CFCD1	ASIC7 no EOI marker after the completion of transmitting the amount of codes set during compression at DMA_A		
CFCD2	ASIC7 target abort		
CFCD3	ASIC7 master abort		
CFCD4	ASIC7 forced suspension		
CFCD5	ASIC7 PCI master detects retry error		
CFCD6	ASIC7 master read data parity error		
CFCD7	ASIC7 master write data parity error		
CFCD8	ASIC7 system error		
CFCD9	ASIC7 slave read data parity error occurred		
CFCDA	ASIC7 slave write data parity error occurred		
CFCDB	ASIC7 address parity error occurred		
CFCDC	CPS2007 PCI slave ileagal access error occurred		
CFCDD	CPS2007 watchdog timer error occurred		
CFCDE	CPS2007 address parity error occurred		
CFCDF	CPS2007 slave write data parity error occurred		

4.14.15 CFCE#

Code	Item	Component	Rank
CFCE0	CPS2007 slave read data parity error occurred	• MFP board (MFPB) • DSC board/1 (DSCB/1) • DSC board/2 (DSCB/2) • Dual scan image processing board (DSIPB) (when DF-701 or UK-209 is installed)	C
CFCE1	PIC2007 PCI slave illegal access error occurred		
CFCE2	PIC2007 address parity error occurred		
CFCE3	PIC2007 slave write data parity error occurred		
CFCE4	PIC2007 slave read data parity error occurred		
CFCE5	ASIC22 watchdog timer error occurred		

Code	Item	Component	Rank
CFCE6	ASIC22 local bus error occurred		
CFCE7	ASIC22 another type of error occurred		
CFCE8	EmperorIP is accessed during ASIC second sheet soft reset active		
CFCE9	ASIC second sheet memory master access had Completer Abort		
CFCEA	ASIC second sheet memory master access had Unsupported Request		
CFCEB	ASIC second sheet memory master access had Completion Timeout		
CFCEC	ASIC second sheet memory master access had Poisoned TLP		
CFCED	ASIC second sheet memory target access had Unsupported Request		
CFCEE	ASIC second sheet memory target access had Poisoned TLP occurred		
CFCEF	ASIC second sheet config target access had Unsupported Request		

4.14.16 CFCF#

Code	Item	Component	Rank
CFCF0	ASIC second sheet config target access had Poisoned TLP	• MFP board (MFPB) • DSC board/1 (DSCB/1) • DSC board/2 (DSCB/2) • Dual scan image processing board (DSIPB) (when DF-701 or UK-209 is installed)	C
CFCF1	ASIC second sheet Emepror-IP error		
CFCF2	EmperorIP is accessed during ASIC third sheet soft reset active		
CFCF3	ASIC third sheet memory master access had Completer Abort		
CFCF4	ASIC third sheet memory master access had Unsupported Request		
CFCF5	ASIC third sheet memory master access had Completion Timeout		
CFCF6	ASIC third sheet memory master access had Poisoned TLP		
CFCF7	ASIC third sheet memory target access had Unsupported Request		
CFCF8	ASIC third sheet memory target access had Poisoned TLP		
CFCF9	ASIC third sheet config target access had Unsupported Request		
CFCFA	ASIC third sheet config target access had Poisoned TLP		
CFCFB	ASIC third sheet Emepror-IP error		

4.15 CFD##

4.15.1 CFD0#

Code	Item	Component	Rank
CFD00	ASIC1200 first sheet DMA00 time out	• MFP board (MFPB) • DSC board/1 (DSCB/1) • DSC board/2 (DSCB/2) • Dual scan image processing board (DSIPB) (when DF-701 or UK-209 is installed)	C
CFD01	ASIC1200 first sheet DMA01 time out		
CFD02	ASIC1200 first sheet DMA02 time out		
CFD03	ASIC1200 first sheet DMA03 time out		
CFD04	ASIC1200 first sheet DMA04 time out		
CFD05	ASIC1200 first sheet DMA05 time out		
CFD06	ASIC1200 first sheet DMA06 time out		
CFD07	ASIC1200 first sheet DMA07 time out		
CFD08	ASIC1200 first sheet DMA08 time out		
CFD09	ASIC1200 first sheet DMA09 time out		
CFD0A	ASIC1200 first sheet DMA10 time out		
CFD0B	ASIC1200 first sheet DMA11 time out		
CFD0C	ASIC1200 first sheet DMA12 time out		
CFD0D	ASIC1200 first sheet DMA13 time out		
CFD0E	ASIC1200 first sheet DMA14 time out		
CFD0F	ASIC1200 first sheet DMA15 time out		

4.15.2 CFD1#

Code	Item	Component	Rank
CFD10	ASIC1200 first sheet DMA16 time out	• MFP board (MFPB) • DSC board/1 (DSCB/1) • DSC board/2 (DSCB/2) • Dual scan image processing board (DSIPB) (when DF-701 or UK-209 is installed)	C
CFD11	ASIC1200 first sheet DMA17 time out		
CFD12	ASIC1200 first sheet DMA18 time out		
CFD13	ASIC1200 first sheet DMA19 time out		
CFD14	ASIC1200 first sheet DMA20 time out		
CFD15	ASIC1200 first sheet DMA21 time out		
CFD16	ASIC1200 first sheet DMA22 time out		
CFD17	ASIC1200 first sheet DMA23 time out		

Code	Item	Component	Rank
CFD18	ASIC1200 first sheet DMA24 time out		
CFD19	ASIC1200 first sheet DMA25 time out		
CFD1A	ASIC1200 first sheet DMA26 time out		
CFD1B	ASIC1200 first sheet DMA27 time out		
CFD1C	ASIC1200 first sheet DMA28 time out		
CFD1D	ASIC1200 first sheet DMA29 time out		
CFD1E	ASIC1200 first sheet DMA30 time out		
CFD1F	ASIC1200 first sheet DMA31 time out		

4.15.3 CFD2#

Code	Item	Component	Rank
CFD20	ASIC1200 first sheet DMA32 time out	• MFP board (MFPB) • DSC board/1 (DSCB/1) • DSC board/2 (DSCB/2) • Dual scan image processing board (DSIPB) (when DF-701 or UK-209 is installed)	C

4.15.4 CFD3#

Code	Item	Component	Rank
CFD30	ASIC second sheet DMA00 time out	• MFP board (MFPB) • DSC board/1 (DSCB/1) • DSC board/2 (DSCB/2) • Dual scan image processing board (DSIPB) (when DF-701 or UK-209 is installed)	C
CFD31	ASIC second sheet DMA01 time out		
CFD32	ASIC second sheet DMA02 time out		
CFD33	ASIC second sheet DMA03 time out		
CFD34	ASIC second sheet DMA04 time out		
CFD35	ASIC second sheet DMA05 time out		
CFD36	ASIC second sheet DMA06 time out		
CFD37	ASIC second sheet DMA07 time out		
CFD38	ASIC second sheet DMA08 time out		
CFD39	ASIC second sheet DMA09 time out		
CFD3A	ASIC second sheet DMA10 time out		
CFD3B	ASIC second sheet DMA11 time out		
CFD3C	ASIC second sheet DMA12 time out		
CFD3D	ASIC second sheet DMA13 time out		
CFD3E	ASIC second sheet DMA14 time out		
CFD3F	ASIC second sheet DMA15 time out		

4.15.5 CFD4#

Code	Item	Component	Rank
CFD40	ASIC second sheet DMA16 time out	• MFP board (MFPB) • DSC board/1 (DSCB/1) • DSC board/2 (DSCB/2) • Dual scan image processing board (DSIPB) (when DF-701 or UK-209 is installed)	C
CFD41	ASIC second sheet DMA17 time out		
CFD42	ASIC second sheet DMA18 time out		
CFD43	ASIC second sheet DMA19 time out		
CFD44	ASIC second sheet DMA20 time out		
CFD45	ASIC second sheet DMA21 time out		
CFD46	ASIC second sheet DMA22 time out		
CFD47	ASIC second sheet DMA23 time out		
CFD48	ASIC second sheet DMA24 time out		
CFD49	ASIC second sheet DMA25 time out		
CFD4A	ASIC second sheet DMA26 time out		
CFD4B	ASIC second sheet DMA27 time out		
CFD4C	ASIC second sheet DMA28 time out		
CFD4D	ASIC second sheet DMA29 time out		
CFD4E	ASIC second sheet DMA30 time out		
CFD4F	ASIC second sheet DMA31 time out		

4.15.6 CFD5#

Code	Item	Component	Rank
CFD50	ASIC second sheet DMA32 time out	• MFP board (MFPB) • DSC board/1 (DSCB/1) • DSC board/2 (DSCB/2) • Dual scan image processing board (DSIPB) (when DF-701 or UK-209 is installed)	C

4.15.7 CFD6#

Code	Item	Component	Rank
CFD60	ASIC third sheet DMA00 time out	• MFP board (MFPB) • DSC board/1 (DSCB/1) • DSC board/2 (DSCB/2) • Dual scan image processing board (DSIPB) (when DF-701 or UK-209 is installed)	C
CFD61	ASIC third sheet DMA01 time out		
CFD62	ASIC third sheet DMA02 time out		
CFD63	ASIC third sheet DMA03 time out		
CFD64	ASIC third sheet DMA04 time out		
CFD65	ASIC third sheet DMA05 time out		
CFD66	ASIC third sheet DMA06 time out		
CFD67	ASIC third sheet DMA07 time out		
CFD68	ASIC third sheet DMA08 time out		
CFD69	ASIC third sheet DMA09 time out		
CFD6A	ASIC third sheet DMA10 time out		
CFD6B	ASIC third sheet DMA11 time out		
CFD6C	ASIC third sheet DMA12 time out		
CFD6D	ASIC third sheet DMA13 time out		
CFD6E	ASIC third sheet DMA14 time out		
CFD6F	ASIC third sheet DMA15 time out		

4.15.8 CFD7#

Code	Item	Component	Rank
CFD70	ASIC third sheet DMA16 time out	• MFP board (MFPB) • DSC board/1 (DSCB/1) • DSC board/2 (DSCB/2) • Dual scan image processing board (DSIPB) (when DF-701 or UK-209 is installed)	C
CFD71	ASIC third sheet DMA17 time out		
CFD72	ASIC third sheet DMA18 time out		
CFD73	ASIC third sheet DMA19 time out		
CFD74	ASIC third sheet DMA20 time out		
CFD75	ASIC third sheet DMA21 time out		
CFD76	ASIC third sheet DMA22 time out		
CFD77	ASIC third sheet DMA23 time out		
CFD78	ASIC third sheet DMA24 time out		
CFD79	ASIC third sheet DMA25 time out		
CFD7A	ASIC third sheet DMA26 time out		
CFD7B	ASIC third sheet DMA27 time out		
CFD7C	ASIC third sheet DMA28 time out		
CFD7D	ASIC third sheet DMA29 time out		
CFD7E	ASIC third sheet DMA30 time out		
CFD7F	ASIC third sheet DMA31 time out		

4.15.9 CFD8#

Code	Item	Component	Rank
CFD80	ASIC third sheet DMA32 time out	• MFP board (MFPB) • DSC board/1 (DSCB/1) • DSC board/2 (DSCB/2) • Dual scan image processing board (DSIPB) (when DF-701 or UK-209 is installed)	C

4.15.10 CFDA#

Code	Item	Component	Rank
CFDA3	DS board JEPG DMA_A time out	• MFP board (MFPB)	C

Code	Item	Component	Rank
		• DSC board/1 (DSCB/1) • DSC board/2 (DSCB/2) • EFI relay board (VI-506) • Dual scan image processing board (DSIPB) (when DF-701 or UK-209 is installed)	

4.16 CFE##

4.16.1 CFE0#

Code	Item	Component	Rank
CFE00	ASIC1200 first sheet DMA00 time out	• MFP board (MFPB) • DSC board/1 (DSCB/1) • DSC board/2 (DSCB/2) • Dual scan image processing board (DSIPB) (when DF-701 or UK-209 is installed)	C
CFE01	ASIC1200 first sheet DMA01 time out		
CFE02	ASIC1200 first sheet DMA02 time out		
CFE03	ASIC1200 first sheet DMA03 time out		
CFE04	ASIC1200 first sheet DMA04 time out		
CFE05	ASIC1200 first sheet DMA05 time out		
CFE06	ASIC1200 first sheet DMA06 time out		
CFE07	ASIC1200 first sheet DMA07 time out		
CFE08	ASIC1200 first sheet DMA08 time out		
CFE09	ASIC1200 first sheet DMA09 time out		
CFE0A	ASIC1200 first sheet DMA10 time out		
CFE0B	ASIC1200 first sheet DMA11 time out		
CFE0C	ASIC1200 first sheet DMA12 time out		
CFE0D	ASIC1200 first sheet DMA13 time out		
CFE0E	ASIC1200 first sheet DMA14 time out		
CFE0F	ASIC1200 first sheet DMA15 time out		

4.16.2 CFE1#

Code	Item	Component	Rank
CFE10	ASIC1200 first sheet DMA16 time out	• MFP board (MFPB) • DSC board/1 (DSCB/1) • DSC board/2 (DSCB/2) • Dual scan image processing board (DSIPB) (when DF-701 or UK-209 is installed)	C
CFE11	ASIC1200 first sheet DMA17 time out		
CFE12	ASIC1200 first sheet DMA18 time out		
CFE13	ASIC1200 first sheet DMA19 time out		
CFE14	ASIC1200 first sheet DMA20 time out		
CFE15	ASIC1200 first sheet DMA21 time out		
CFE16	ASIC1200 first sheet DMA22 time out		
CFE17	ASIC1200 first sheet DMA23 time out		
CFE18	ASIC1200 first sheet DMA24 time out		
CFE19	ASIC1200 first sheet DMA25 time out		
CFE1A	ASIC1200 first sheet DMA26 time out		
CFE1B	ASIC1200 first sheet DMA27 time out		
CFE1C	ASIC1200 first sheet DMA28 time out		
CFE1D	ASIC1200 first sheet DMA29 time out		
CFE1E	ASIC1200 first sheet DMA30 time out		
CFE1F	ASIC1200 first sheet DMA31 time out		

4.16.3 CFE2#

Code	Item	Component	Rank
CFE20	ASIC1200 first sheet DMA32 time out	• MFP board (MFPB) • DSC board/1 (DSCB/1) • DSC board/2 (DSCB/2) • Dual scan image processing board (DSIPB) (when DF-701 or UK-209 is installed)	C

4.16.4 CFE3#

Code	Item	Component	Rank
CFE30	ASIC second sheet DMA00 time out	• MFP board (MFPB)	C

Code	Item	Component	Rank
CFE31	ASIC second sheet DMA01 time out	• DSC board/1 (DSCB/1) • DSC board/2 (DSCB/2) • Dual scan image processing board (DSIPB) (when DF-701 or UK-209 is installed)	
CFE32	ASIC second sheet DMA02 time out		
CFE33	ASIC second sheet DMA03 time out		
CFE34	ASIC second sheet DMA04 time out		
CFE35	ASIC second sheet DMA05 time out		
CFE36	ASIC second sheet DMA06 time out		
CFE37	ASIC second sheet DMA07 time out		
CFE38	ASIC second sheet DMA08 time out		
CFE39	ASIC second sheet DMA09 time out		
CFE3A	ASIC second sheet DMA10 time out		
CFE3B	ASIC second sheet DMA11 time out		
CFE3C	ASIC second sheet DMA12 time out		
CFE3D	ASIC second sheet DMA13 time out		
CFE3E	ASIC second sheet DMA14 time out		
CFE3F	ASIC second sheet DMA15 time out		

4.16.5 CFE4#

Code	Item	Component	Rank
CFE40	ASIC second sheet DMA16 time out	• MFP board (MFPB) • DSC board/1 (DSCB/1) • DSC board/2 (DSCB/2) • Dual scan image processing board (DSIPB) (when DF-701 or UK-209 is installed)	C
CFE41	ASIC second sheet DMA17 time out		
CFE42	ASIC second sheet DMA18 time out		
CFE43	ASIC second sheet DMA19 time out		
CFE44	ASIC second sheet DMA20 time out		
CFE45	ASIC second sheet DMA21 time out		
CFE46	ASIC second sheet DMA22 time out		
CFE47	ASIC second sheet DMA23 time out		
CFE48	ASIC second sheet DMA24 time out		
CFE49	ASIC second sheet DMA25 time out		
CFE4A	ASIC second sheet DMA26 time out		
CFE4B	ASIC second sheet DMA27 time out		
CFE4C	ASIC second sheet DMA28 time out		
CFE4D	ASIC second sheet DMA29 time out		
CFE4E	ASIC second sheet DMA30 time out		
CFE4F	ASIC second sheet DMA31 time out		

4.16.6 CFE5#

Code	Item	Component	Rank
CFE50	ASIC second sheet DMA32 time out	• MFP board (MFPB) • DSC board/1 (DSCB/1) • DSC board/2 (DSCB/2) • Dual scan image processing board (DSIPB) (when DF-701 or UK-209 is installed)	C

4.16.7 CFE6#

Code	Item	Component	Rank
CFE60	ASIC third sheet DMA00 time out	• MFP board (MFPB) • DSC board/1 (DSCB/1) • DSC board/2 (DSCB/2) • Dual scan image processing board (DSIPB) (when DF-701 or UK-209 is installed)	C
CFE61	ASIC third sheet DMA01 time out		
CFE62	ASIC third sheet DMA02 time out		
CFE63	ASIC third sheet DMA03 time out		
CFE64	ASIC third sheet DMA04 time out		
CFE65	ASIC third sheet DMA05 time out		
CFE66	ASIC third sheet DMA06 time out		
CFE67	ASIC third sheet DMA07 time out		
CFE68	ASIC third sheet DMA08 time out		
CFE69	ASIC third sheet DMA09 time out		
CFE6A	ASIC third sheet DMA10 time out		
CFE6B	ASIC third sheet DMA11 time out		

Code	Item	Component	Rank
CFE6C	ASIC third sheet DMA12 time out		
CFE6D	ASIC third sheet DMA13 time out		
CFE6E	ASIC third sheet DMA14 time out		
CFE6F	ASIC third sheet DMA15 time out		

4.16.8 CFE7#

Code	Item	Component	Rank
CFE70	ASIC third sheet DMA16 time out	• MFP board (MFPB) • DSC board/1 (DSCB/1) • DSC board/2 (DSCB/2) • Dual scan image processing board (DSIPB) (when DF-701 or UK-209 is installed)	C
CFE71	ASIC third sheet DMA17 time out		
CFE72	ASIC third sheet DMA18 time out		
CFE73	ASIC third sheet DMA19 time out		
CFE74	ASIC third sheet DMA20 time out		
CFE75	ASIC third sheet DMA21 time out		
CFE76	ASIC third sheet DMA22 time out		
CFE77	ASIC third sheet DMA23 time out		
CFE78	ASIC third sheet DMA24 time out		
CFE79	ASIC third sheet DMA25 time out		
CFE7A	ASIC third sheet DMA26 time out		
CFE7B	ASIC third sheet DMA27 time out		
CFE7C	ASIC third sheet DMA28 time out		
CFE7D	ASIC third sheet DMA29 time out		
CFE7E	ASIC third sheet DMA30 time out		
CFE7F	ASIC third sheet DMA31 time out		

4.16.9 CFE8#

Code	Item	Component	Rank
CFE80	ASIC third sheet DMA32 time out	• MFP board (MFPB) • DSC board/1 (DSCB/1) • DSC board/2 (DSCB/2) • Dual scan image processing board (DSIPB) (when DF-701 or UK-209 is installed)	C

4.16.10 CFEA#

Code	Item	Component	Rank
CFEA3	ASIC DS board JPEG DMA_A time out	• MFP board (MFPB) • DSC board/1 (DSCB/1) • DSC board/2 (DSCB/2) • EFI relay board (EFIRYB: VI-506) • Dual scan image processing board (DSIPB) (when DF-701 or UK-209 is installed)	C

4.17 CFF##

4.17.1 CFF0#

Code	Item	Component	Rank
CFF00	ASIC1200 first sheet DMA00 time out	• MFP board (MFPB) • DSC board/1 (DSCB/1) • DSC board/2 (DSCB/2) • Dual scan image processing board (DSIPB) (when DF-701 or UK-209 is installed)	C
CFF01	ASIC1200 first sheet DMA01 time out		
CFF02	ASIC1200 first sheet DMA02 time out		
CFF03	ASIC1200 first sheet DMA03 time out		
CFF04	ASIC1200 first sheet DMA04 time out		
CFF05	ASIC1200 first sheet DMA05 time out		
CFF06	ASIC1200 first sheet DMA06 time out		
CFF07	ASIC1200 first sheet DMA07 time out		
CFF08	ASIC1200 first sheet DMA08 time out		
CFF09	ASIC1200 first sheet DMA09 time out		
CFF0A	ASIC1200 first sheet DMA10 time out		

Code	Item	Component	Rank
CFF0B	ASIC1200 first sheet DMA11 time out		
CFF0C	ASIC1200 first sheet DMA12 time out		
CFF0D	ASIC1200 first sheet DMA13 time out		
CFF0E	ASIC1200 first sheet DMA14 time out		
CFF0F	ASIC1200 first sheet DMA15 time out		

4.17.2 CFF1#

Code	Item	Component	Rank
CFF10	ASIC1200 first sheet DMA16 time out	• MFP board (MFPB) • DSC board/1 (DSCB/1) • DSC board/2 (DSCB/2) • Dual scan image processing board (DSIPB) (when DF-701 or UK-209 is installed)	C
CFF11	ASIC1200 first sheet DMA17 time out		
CFF12	ASIC1200 first sheet DMA18 time out		
CFF13	ASIC1200 first sheet DMA19 time out		
CFF14	ASIC1200 first sheet DMA20 time out		
CFF15	ASIC1200 first sheet DMA21 time out		
CFF16	ASIC1200 first sheet DMA22 time out		
CFF17	ASIC1200 first sheet DMA23 time out		
CFF18	ASIC1200 first sheet DMA24 time out		
CFF19	ASIC1200 first sheet DMA25 time out		
CFF1A	ASIC1200 first sheet DMA26 time out		
CFF1B	ASIC1200 first sheet DMA27 time out		
CFF1C	ASIC1200 first sheet DMA28 time out		
CFF1D	ASIC1200 first sheet DMA29 time out		
CFF1E	ASIC1200 first sheet DMA30 time out		
CFF1F	ASIC1200 first sheet DMA31 time out		

4.17.3 CFF2#

Code	Item	Component	Rank
CFF20	ASIC1200 first sheet DMA32 time out	• MFP board (MFPB) • DSC board/1 (DSCB/1) • DSC board/2 (DSCB/2) • Dual scan image processing board (DSIPB) (when DF-701 or UK-209 is installed)	C

4.17.4 CFF3#

Code	Item	Component	Rank
CFF30	ASIC second sheet DMA00 time out	• MFP board (MFPB) • DSC board/1 (DSCB/1) • DSC board/2 (DSCB/2) • Dual scan image processing board (DSIPB) (when DF-701 or UK-209 is installed)	C
CFF31	ASIC second sheet DMA01 time out		
CFF32	ASIC second sheet DMA02 time out		
CFF33	ASIC second sheet DMA03 time out		
CFF34	ASIC second sheet DMA04 time out		
CFF35	ASIC second sheet DMA05 time out		
CFF36	ASIC second sheet DMA06 time out		
CFF37	ASIC second sheet DMA07 time out		
CFF38	ASIC second sheet DMA08 time out		
CFF39	ASIC second sheet DMA09 time out		
CFF3A	ASIC second sheet DMA10 time out		
CFF3B	ASIC second sheet DMA11 time out		
CFF3C	ASIC second sheet DMA12 time out		
CFF3D	ASIC second sheet DMA13 time out		
CFF3E	ASIC second sheet DMA14 time out		
CFF3F	ASIC second sheet DMA15 time out		

4.17.5 CFF4#

Code	Item	Component	Rank
CFF40	ASIC second sheet DMA16 time out	• MFP board (MFPB) • DSC board/1 (DSCB/1) • DSC board/2 (DSCB/2)	C
CFF41	ASIC second sheet DMA17 time out		
CFF42	ASIC second sheet DMA18 time out		

Code	Item	Component	Rank
CFF43	ASIC second sheet DMA19 time out	• Dual scan image processing board (DSIPB) (when DF-701 or UK-209 is installed)	
CFF44	ASIC second sheet DMA20 time out		
CFF45	ASIC second sheet DMA21 time out		
CFF46	ASIC second sheet DMA22 time out		
CFF47	ASIC second sheet DMA23 time out		
CFF48	ASIC second sheet DMA24 time out		
CFF49	ASIC second sheet DMA25 time out		
CFF4A	ASIC second sheet DMA26 time out		
CFF4B	ASIC second sheet DMA27 time out		
CFF4C	ASIC second sheet DMA28 time out		
CFF4D	ASIC second sheet DMA29 time out		
CFF4E	ASIC second sheet DMA30 time out		
CFF4F	ASIC second sheet DMA31 time out		

4.17.6 CFF5#

Code	Item	Component	Rank
CFF50	ASIC second sheet DMA32 time out	• MFP board (MFPB) • DSC board/1 (DSCB/1) • DSC board/2 (DSCB/2) • Dual scan image processing board (DSIPB) (when DF-701 or UK-209 is installed)	C

4.17.7 CFF6#

Code	Item	Component	Rank
CFF60	ASIC third sheet DMA00 time out	• MFP board (MFPB) • DSC board/1 (DSCB/1) • DSC board/2 (DSCB/2) • Dual scan image processing board (DSIPB) (when DF-701 or UK-209 is installed)	C
CFF61	ASIC third sheet DMA01 time out		
CFF62	ASIC third sheet DMA02 time out		
CFF63	ASIC third sheet DMA03 time out		
CFF64	ASIC third sheet DMA04 time out		
CFF65	ASIC third sheet DMA05 time out		
CFF66	ASIC third sheet DMA06 time out		
CFF67	ASIC third sheet DMA07 time out		
CFF68	ASIC third sheet DMA08 time out		
CFF69	ASIC third sheet DMA09 time out		
CFF6A	ASIC third sheet DMA10 time out		
CFF6B	ASIC third sheet DMA11 time out		
CFF6C	ASIC third sheet DMA12 time out		
CFF6D	ASIC third sheet DMA13 time out		
CFF6E	ASIC third sheet DMA14 time out		
CFF6F	ASIC third sheet DMA15 time out		

4.17.8 CFF7#

Code	Item	Component	Rank
CFF70	ASIC third sheet DMA16 time out	• MFP board (MFPB) • DSC board/1 (DSCB/1) • DSC board/2 (DSCB/2) • Dual scan image processing board (DSIPB) (when DF-701 or UK-209 is installed)	C
CFF71	ASIC third sheet DMA17 time out		
CFF72	ASIC third sheet DMA18 time out		
CFF73	ASIC third sheet DMA19 time out		
CFF74	ASIC third sheet DMA20 time out		
CFF75	ASIC third sheet DMA21 time out		
CFF76	ASIC third sheet DMA22 time out		
CFF77	ASIC third sheet DMA23 time out		
CFF78	ASIC third sheet DMA24 time out		
CFF79	ASIC third sheet DMA25 time out		
CFF7A	ASIC third sheet DMA26 time out		
CFF7B	ASIC third sheet DMA27 time out		
CFF7C	ASIC third sheet DMA28 time out		
CFF7D	ASIC third sheet DMA29 time out		

Code	Item	Component	Rank
CFF7E	ASIC third sheet DMA30 time out		
CFF7F	ASIC third sheet DMA31 time out		

4.17.9 CFF8#

Code	Item	Component	Rank
CFF80	ASIC third sheet DMA32 time out	• MFP board (MFPB) • DSC board/1 (DSCB/1) • DSC board/2 (DSCB/2) • Dual scan image processing board (DSIPB) (when DF-701 or UK-209 is installed)	C

4.17.10 CFFA#

Code	Item	Component	Rank
CFFA3	DS board JEPG DMA_A time out	• MFP board (MFPB) • DSC board/1 (DSCB/1) • DSC board/2 (DSCB/2) • EFI relay board (EFIRYB: VI-506) • Dual scan image processing board (DSIPB) (when DF-701 or UK-209 is installed)	C

4.17.11 CFFC#

Code	Item	Component	Rank
CFFCC	DS board JEPG DMA_A error interruption	• MFP board (MFPB) • DSC board/1 (DSCB/1) • DSC board/2 (DSCB/2) • EFI relay board (EFIRYB: VI-506) • Dual scan image processing board (DSIPB) (when DF-701 or UK-209 is installed)	C
CFFCF	DS board JPEG watchdog timer error		

4.17.12 CFFD#

Code	Item	Component	Rank
CFFD0	DS board JPEG PCI slave error	• MFP board (MFPB) • DSC board/1 (DSCB/1) • DSC board/2 (DSCB/2) • EFI relay board (EFIRYB: VI-506) • Dual scan image processing board (DSIPB) (when DF-701 or UK-209 is installed)	C
CFFD1	DS board JPEG, JPEG related interruption during internal processing at DMA_A		
CFFD2	DS board JPEG, JPEG related interruption during internal processing at DMA_A		
CFFD3	DS board JPEG, JPEG related interruption during internal processing at DMA_A		
CFFD4	DS board JPEG, JPEG related interruption during internal processing at DMA_A		
CFFD5	DS board JPEG, JPEG related interruption during internal processing at DMA_A		
CFFD6	DS board JPEG, JPEG related interruption during internal processing at DMA_A		
CFFD7	DS board JPEG, JPEG related interruption during internal processing at DMA_A, error interruption		
CFFD8	DS board JPEG, JPEG related interruption during internal processing at DMA_A		
CFFD9	DS board JPEG, JPEG related interruption during internal processing at DMA_A		
CFFDA	DS board JPEG, JPEG related interruption with multiple statuses during internal processing at DMA_A		
CFFDB	DS board JPEG no EOI marker after the completion of transmitting the amount of codes set during expansion at DMA_A		
CFFDC	DS board JPEG compressed data go beyond the set value during compression at DMA_A		
CFFDD	DS board JPEG no EOI marker after the completion of transmitting the amount of codes set during compression at DMA_A		

Code	Item	Component	Rank
CFFDE	DS board JPEG target abort		
CFFDF	DS board JPEG master abort		

4.17.13 CFFE#

Code	Item	Component	Rank
CFFE0	DS board JPEG forced suspension	• MFP board (MFPB) • DSC board/1 (DSCB/1) • DSC board/2 (DSCB/2) • EFI relay board (EFIRYB: VI-506) • Dual scan image processing board (DSIPB) (when DF-701 or UK-209 is installed)	C
CFFE1	DS board JPEG PCI master detects retry error		
CFFE2	DS board JPEG master read data parity error		
CFFE3	DS board JPEG master write data parity error		
CFFE4	DS board JPEG system error		
CFFE5	DS board JPEG slave read data parity error occurred		
CFFE6	DS board JPEG slave write data parity error occurred		
CFFE7	DS board JPEG address parity error occurred		

5. ERROR CODE FOR THE INTERNET ISW

5.1 Error code list for the Internet ISW

- When a trouble occurred while conducting the Internet ISW and it was not normally connected, the message on the status and the error code will be displayed on the control panel.
  When updating with CS Remote Care, the error code will be sent to the CS Remote Care center.

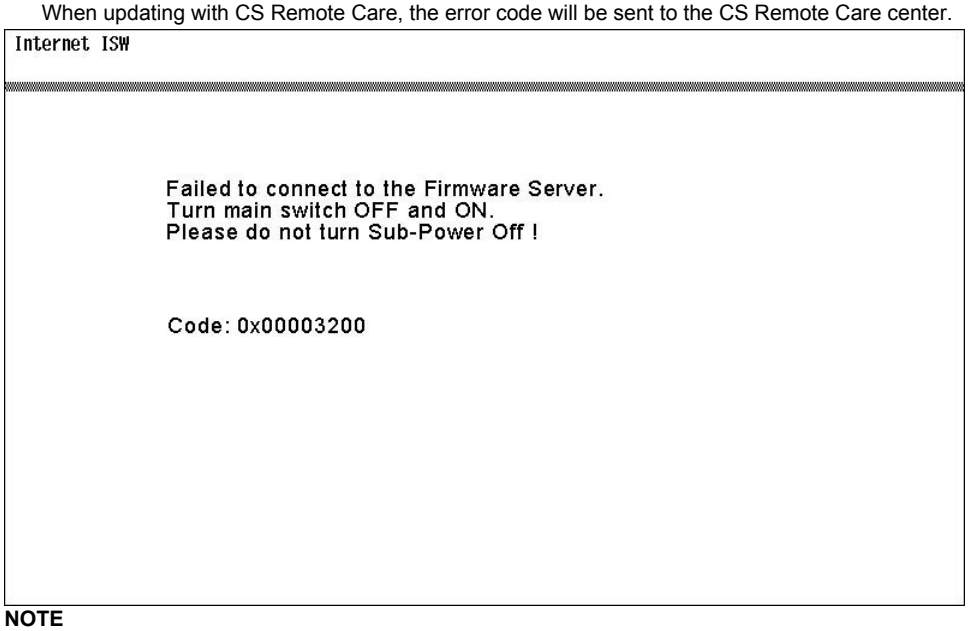

NOTE

- **When a code other than the error code list is displayed, contact and inform the error code.**

5.2 0x0#

Error code	Description	Countermeasure
0x00000001	Illegal error on the control	• Check if the following setting is set to “ON”. [Service Mode] -> [Machine Update Setting] -> [Internet ISW] -> [Internet ISW Set] • Check the status of the following setting. [Service Mode] -> [Machine Update Setting] -> [Internet ISW] -> [Forwarding Access Setting] • If the above process does not solve the problem, inform the corresponding error code to the KONICA MINOLTA.
0x00000010	Parameter error	• Check if the following setting is set to “ON”. [Service Mode] -> [Machine Update Setting] -> [Internet ISW] -> [Internet ISW Set] • If the above process does not solve the problem, inform the corresponding error code to the KONICA MINOLTA.
0x00111000	Error concerning the network • Connection has been completed.	• Check the User’s network environment. (LAN cable’s connection) • Check the status of the following setting. [Service Mode] -> [Machine Update Setting] -> [Internet ISW] -> [Forwarding Access Setting] • Check to see if the FTP server operates normally.
0x00111001	Error concerning the network • It cannot be connected to the server.	• Check the network environment of the User. • Check to see if the FTP server operates normally. • Check whether the URL of the data transfer server includes http://, ftp://, or the like to specify a protocol in [Service Mode] -> [Machine Update Setting] -> [Internet ISW] -> [Forwarding Access Setting].
0x00111100	Error concerning the network • Communication timeout.	
0x00111101	Error concerning the network • Disconnection occurred.	• Check the network environment of the User. • Check to see if the FTP server operates normally.
0x00111110	Error concerning the network • The network is not connected.	
0x00110010	Error concerning the network • Others	
0x00001###	FTP error • Reply code when it failed to be connected.	• Check to see if FTP server normally operates. • Check the IP address, user’s name, etc.
0x00002###	FTP error • Error reply code for the user command or pass command.	• Check to see if FTP server operates normally.
0x00003###	FTP error • Error reply code for CWD command.	
0x00004###	FTP error • Error reply code for the TYPE command.	• Check to see if FTP server operates normally.
0x00005###	FTP error • Error reply code for the PORT command.	

Error code	Description	Countermeasure
0x00006###	FTP error • Error reply code for the PASV command.	• Check to see if FTP server operates normally. • Set the PASV mode to “OFF”, and try it again.
0x00007###	FTP error • Error reply code for the RETR command.	• Check to see if FTP server operates normally. • Wait for about 30 minutes and try it again.

5.3 0x1#

Error code	Description	Countermeasure
0x10000100	• It cannot be accepted because of the job currently being executed. • ISW being executed by other method.	• Wait for the current job to be completed and try it again.
0x10000101	It cannot be accepted because the power key is OFF.	• Turn power key ON and try it again.
0x10000102	The Internet ISW is already being executed.	• Wait for the current Internet ISW to be completed.
0x10000103	It failed to prohibit the job. (It failed to lock the operation.) -> It failed to lock the job because the operation is already locked with PSWC, etc.	• Check if the following setting is set to “ON.” [Service Mode] -> [Machine Update Setting] -> [Internet ISW] -> [Internet ISW Set] • If the above process does not solve the problem, inform the corresponding error code to the KONICA MINOLTA.
0x10000104	There is no space for firmware data to be downloaded.	
0x10000106	Check sum error	
0x10000107	File access error • The file downloaded has an error. • The header of the file which has been read has an error. • The size of the file to be downloaded is too large. • When it is identified to be the different type of firmware.	• Check to see if the downloaded firmware is of the correct type.
0x10000108	The area firmware is stored is destroyed, and another ISW is necessary.	• Wait until ISW is automatically executed on MFP side.

5.4 0x2#

Error code	Description	Countermeasure
0x20000000	The temporary error when running the subset • When starting the Internet ISW in a normal program, the rebooting will start and the Internet ISW will be executed with the subset program. During the process by the subset program, it has to be in the “Failed” status unless the Internet ISW is successfully conducted. This code is used temporarily to make it in error status.	• Wait until ISW is automatically executed on MFP side.

6. CS Remote Care ERROR CODE

6.1 Troubleshooting for CS Remote Care

If communication is not done properly, check the condition by following the procedures shown below.

1. Shift the screen in the order of [Service Mode] -> [CS Remote Care] -> [Detail Setting].
   At this time, in the cases of initial transmitting / administrator transmitting / maintenance start transmitting / maintenance finish transmitting, the communication result will be displayed at the top of the screen.

NOTE

- **For the communication result, the following message will be displayed based on its success or failure.**

Display of communication result	Cause	Solution
Communicating	-	-
Communication trouble with the center	Although the machine tries to communicate with the center, there is any trouble and the communication completes unsuccessfully.	See the list of error message and confirm the corresponding point.
Complete successfully	-	-
Modem trouble	Although the machine tries to communicate with the center, there is any trouble in the modem.	• Check if the power of modem in ON. • Check if there is any problem in connection between the modem and the main body.
Busy line	Although the machine tries to communicate with the center, the line to the center is busy.	Communicate with the center again.
No response	Although the machine tries to communicate with the center, there is no response from the center.	• Communicate with the center again. • Check the communication environment of the center side.

6.2 CS Remote Care Operation under Enhanced Security Mode

CS Remote Care can be used even when “ON” is selected in [Administrator Settings] -> [Security Settings] -> [Enhanced Security Mode]. However, to keep the enhanced security level, the following restrictions are accompanied.

- Only SSL communication is available.
- Error occurs if the Center tries to send the following commands.
  - Firmware update command
  - Command of reading and updating account track information
  - Machine settings update command
  - Command of reading and updating Internet ISW setting information

6.3 List of the CS Remote Care error code

6.3.1 When connecting by modem

NOTE

- **When a code other than the ones listed below is displayed, contact KM and inform the error code.**

Error code	Error	Solution
0001	The line is busy (Busy detection)	• Transmit again manually.
0002	Failure of the Modem default setting at transmitting (When the transmission completes with modem initial setting failed)	• Check if the power of the modem is ON. • Check the connecting condition between the modem and the main body.
0003	Timeout of CONNECT at transmitting (No response to ATD)	• Transmit again manually. • Check if the power of the modem is ON. • Check the connecting condition between the modem and the main body.
0005	Timeout of CONNECT at receiving (No response to ATA)	• Check if the power of the modem is ON. • Check the connecting condition between the modem and the main body.
0006	Shut down of the data modem line (Host) (Carrier OFF is detected)	• No solution, because the line is shut down at the host side.
0008	Timeout of start request telegram delivery (Start request telegram is not delivered after line connection)	• Transmit again manually.
0009	Timeout of finish request telegram delivery (Finish request telegram is not delivered (Start of shut down).)	• Transmit again manually.
000A	Receiving rejection (Receiving is made when the main body is set to reject receiving.)	• Check the setting condition of the host side. • Check the setting condition of the main body side.
000B	RS232C driver over run (When the modem detects over run.)	• If the same error is detected several times, turn the modem power OFF and ON.
000C	If the same error is detected several times, turn the modem power OFF and ON.	• If the same error is detected several times, turn the modem power OFF and ON.
000D	Break Interrupt (BI) indicator (When the modem detects Break Interrupt (BI) indicator.)	• If the same error is detected several times, turn the modem power OFF and ON.
0011	Baud rate ERROR (When selected baud rate is out of the specification (9600 bps to 38400 bps).)	• Check the baud rate of the software DipSW.
0016	Status error (upon data arrival)	• Transmit again manually.

Error code	Error	Solution
0018	Machine ID has already been registered (Request telegram 2 (SET-UP) comes from the main body that has already registered machine ID.)	• Set the initial registrations again for all including the host side.
0019	Center ID error (Center ID of the host is not identical with the one of start request telegram.)	• Check center ID setting of the main body side. • Check the setting condition of the host side.
001A	Device ID inconsistency (Device ID of the host is not identical with the one of start request telegram.)	• Check device ID setting of the main body side. • Check the setting of the host side.
001B	Device ID unregistered (Request telegram 2 (Constant data transmitting, emergency call) comes from the main body that has not registered device ID yet.)	• Check device ID setting of the main body side. • Check the setting of the host side.
001C	Grammar error (The specified format is not used in the received reply telegram.)	• Check the settings for CSRC application.
001D	Change unavailable (Item where change is prohibited) (Host inquires change of the setting of the item not allowed to be changed.)	• Check the settings for CSRC application.
001E	Impossible to change (during printing) (Setting cannot be changed because the setting change is made during the machine is printing or starts printing.)	• Try again when the machine is not printing.
001F	Change unavailable (unread item) (Host attempts to write data to the item of which current value has not been read.)	• Check the settings for CSRC application.
0020	Timeout of telegram delivery (At waiting mode of telegram delivery the machine fails to receive the telegram in a given time.)	• Try communication again.
0021	Telegram longer than the specified length. (A telegram longer than the specified length is received.)	• Check the settings for CSRC application.
0027	Transmission / receiving collision (Receiving is detecting during transmitting processing)	• Try communication again.

6.3.2 When connecting by e-mails

NOTE

- **When a code other than the ones listed below is displayed, contact KM and inform the error code.**

(1) 0###

Error code	Error	Solution
0###	Transmission error ###: SMTP responding code (hexadecimal) For SMTP responding code, see RFC issued by IETF after converting hexadecimal number into decimal one.	• Check the SMTP server on User side.

(2) 1###

Error code	Error	Solution
1030	Machine ID mismatching • Received an e-mail which tells that machine ID mismatches.	• Check the machine ID setting. • Check the machine ID setting on host side.
1050	Grammar error • Received mail did not define the CS Remote Care command (2 digits). • The Type of Subject and the command of attached file are not consistent.	• Check mail content.
1061	Modifying not allowed • The host sent a command mail that asked modifying data of item where setting change is not allowed.	• Ask the host to send another instruction mail for modifying.
1062	Modifying not available due to the copy job currently performing • When informing the host that it cannot be modified due to the copy job currently performing.	• Ask the host to send another instruction mail for modifying.
1080	Data length problem • LEN value of TEXT data and actual data length are not consistent.	• Ask the host to send another instruction mail for modifying.
1081	Frame No. error • The last frame has not been received. • There are missing frame No.	• Check the status of the machine registration on host side.
1082	Subject Type problem • Received code did not define the Type of Subject.	• Ask the host to send another instruction mail for modifying.
1084	Date expired • Expiration date for data modification command has passed.	• Ask the host to send another instruction mail for modifying.

Error code	Error	Solution
1091	Oversized command • Received attached file exceeds the machine's receive buffer size.	• Ask the host to send another instruction mail for modifying.
1092	Received an error mail when center setup is not complete	• Check the status of the machine registration on host side.
1199	Illegal request • Status not predicted in design is detected.	• Contact KM and inform the error code.

(3) 2###

Error code	Error	Solution
2039	Socket is not connected • LAN cable on the copier side is detached.	• Check the SMTP server and POP3 server on user side.
203C	Connection timeout	• Check timeout setting.
203E	Network is down • LAN cable on MFP side is detached.	• Check the connection between MFP on the user's side and the network connector. • Check the network environment on the user's side.

(4) 3###

Error code	Error	Solution
3001	POP3_AUTHORIZATION_ERR	• Check the POP3 server environment on user's side.
3002	POP3_TRANSACTION_ERR	• Check the POP3 server environment on user's side.
3003	POP3_CONNECT_ERR	• Check the POP3 server environment on user's side.
3004	POP3_TIMEOUT_ERR	• Check the POP3 server environment on user's side.
3005	POP3_FORMAT_ERR	• Check the POP3 server environment on user's side.
3006	POP3_MEMORY_ERR	• Check the POP3 server environment on user's side.
3007	POP3_JOBID_ERR	• Check the POP3 server environment on user's side.
3008	POP3_NO_DATA_ERR	• Check the POP3 server environment on user's side.
3009	POP3_DELETE_FAIL_ERR	• Check the POP3 server environment on user's side.
3010	POP3_MAILBOX_FULL	• Check the POP3 server environment on user's side.

(5) 4###

Error code	Error	Solution
4103	During polling from MFP, MIO is not active and MFP cannot start communication.	• Wait for a while and try transmitting again.
4104	During e-mail transmission from MFP to the center, the SMTP channel is not in the "Ready" status and MFP cannot send e-mail.	• Wait for a while and try transmitting again.
4105	During polling from MFP, the POP3 channel is not in the "Ready" status and MFP cannot receive e-mail.	• Wait for a while and try transmitting again.
4106	During e-mail transmission from MFP to the center, MIO is not active and MFP cannot start communication.	• Wait for a while and try transmitting again.
41F9	Control error • In the CS Remote Care's internal sequence, message transfer failed.	• Turn the main power switch OFF and then ON.
41FA	Control error • MIO response timed out.	• Turn the main power switch OFF and then ON.
41FB	Control error • As the file descriptor of the e-mail that MFP receives from MIO is invalid, MFP cannot receive the e-mail.	• Turn the main power switch OFF and then ON.
41FC	Control error • During the creation of data to be sent by e-mail, the CS Remote Care's internal status error occurs or the data that need to be sent has not been created.	• Turn the main power switch OFF and then ON.
41FD	Control error • During e-mail reception, the parameter sent from MIO to the CS Remote Care is invalid and MFP cannot receive the e-mail.	• Turn the main power switch OFF and then ON.
41FE	Control error • After the completion of e-mail transmission, MFP received the transmission completion message from MIO. However, the CS Remote Care's internal status was not the status of transmission completion.	• Turn the main power switch OFF and then ON.
41FF	Control error • During e-mail reception, MIO became inactive.	• Turn the main power switch OFF and then ON.

Error code	Error	Solution
4210	Control error • E-mail sent from MIO could not be properly handled in the CS Remote Care.	• Turn the main power switch OFF and then ON.

(6) 5###

Error code	Error	Solution
5###	MIO detects error when sending an attached file.	• Check the SMTP server /POP3 server environment on user's side.

(7) 6###

Error code	Error	Solution
6###	MIO detects error during a sending sequence.	• Check the SMTP server /POP3 server environment on user's side.

6.3.3 When connecting by http

NOTE

- **When a code other than the ones listed below is displayed, contact KM and inform the error code.**

(1) 0###

Error code	Error	Solution
0###	Transmission error ###: http responding code (hexadecimal) For http responding code, see RFC issued by IETF after converting hexadecimal number into decimal one.	• Check the http server.

(2) 1###

Error code	Error	Solution
1030	Machine ID mismatching • Received file which tells that machine ID mismatches.	• Check the machine ID setting. • Check the machine ID setting on host side.
1050	Grammar error • Received file did not define the CS Remote Care command (2 digits). • The Type of Subject and the command of file are not consistent.	• Check file content.
1061	Modifying not allowed • The host sent a command file that asked modifying data of item where setting change is not allowed.	• Ask the host to send another instruction file for modifying.
1062	Modifying not available due to the copy job currently performing • When informing the host that it cannot be modified due to the copy job currently performing.	• Ask the host to send another instruction file for modifying.
1080	Data length problem • LEN value of TEXT data and actual data length are not consistent.	• Ask the host to send another instruction file for modifying.
1081	Frame No. error • The last frame has not been received. • There are missing frame No.	• Check the status of the machine registration on host side.
1082	Subject Type problem • Received code did not define the Type of Subject.	• Ask the host to send another instruction file for modifying.
1084	Date expired • Expiration date for data modification command has passed.	• Ask the host to send another instruction file for modifying.
1091	Oversized command • Received file exceeds the machine's receive buffer size.	• Ask the host to send another instruction file for modifying.
1099	Illegal request • Status not predicted in design is detected.	• Contact KM and inform the error code.

(3) 2###

Error code	Error	Solution
2001	http request result problem • Internal status error	• Check user network environment. • Check http server environment.
2002	http request result problem • File list acquisition result problem	
2003	http request result problem • Request header transmission failure	
2004	http request result problem • Request body transmission failure	

Error code	Error	Solution
2005	http request result problem • Response header receive response failure	
2006	http request result problem • Response body receive response failure	
2007	http request result problem • Session ID inconsistent	

(4) 3###

Error code	Error	Solution
3002	http request result problem • Unopened client ID was specified	• Check user network environment. • Check http server environment.
3003	http request result problem • Receive time out occurred	
3004	http request result problem • Receive error occurred. Or wrong request URL was specified.	
3005	http request result problem • Content-Length or receive size exceeded the specified max. transfer size. Message body size was too large.	
3006	http request result problem • Due to reset, process was stopped. Or message body size exceeded the specified max. transfer size.	
3007	http request result problem • Internal error occurred. Or due to internal reset, process was stopped.	
3008	http request result problem • Connection to WebDAV server failed.	
3009	http request result problem • Error occurred during transmission to the WebDAV server.	
3010	http request result problem • Time out occurred during transmission to the WebDav server.	
3011	http request result problem • Connection to the proxy server failed.	
3012	http request result problem • The proxy server refused CONNECT request.	
3013	http request result problem • The proxy server was set to enabled, but the proxy server host was not set.	
3014	http request result problem • Proxy server authentication failed.	
3015	http request result problem • Other errors were sent from the proxy server.	
3016	http request result problem • Internal error occurred.	
3017	http request result problem • As the device application specified MIO_REQBODY_ERROR, process was stopped.	

(5) 4###

Error code	Error	Solution
4103	After the power is switched ON, HTTP communication is attempted under the condition where HTTP communication is not ready.	• Wait for a while and try transmitting again.
4106	When data is uploaded from MFP to the web server, the network connection is not enabled and MFP cannot start communication.	• Wait for a while and try transmitting again.
41FA	Control error • MIO response timed out.	• Turn the main power switch OFF and then ON.

(6) 5###

Error code	Error	Solution
5###	MIO detects error at file sending.	• Check the http server environment.

(7) 6###

Error code	Error	Solution
6###	MIO detects error at sending sequence.	• Check the http server environment.

(8) 7###

Error code	Error	Solution
7000	Failure occurs when a certificate for product authentication is acquired from a USB flash drive.	• Acquire a new certificate (within 6 days after the issue).

6.3.4 When connecting by Fax modem

NOTE

- **When a code other than the ones listed below is displayed, see the FK-502 Service Manual.**

Error code	Error	Solution
T50	Host terminal ID not correct	• Check the telephone number set for host.
R80	Serial number received from the host not correct.	• Check the status of the Machine registration on host side.
R81	Disconnection of writing instruction from host during machine is running.	• Wait for a while and try transmitting again.
R82	Disconnection of FAX-CSRC instruction when FAX-CSRC is not allowed.	• Check the status of the Machine registration on host side.
R83	Host command error.	• Contact KM and inform the error code.
R84	NVRAM writing error.	• Contact KM and inform the error code.

7. NETWORK ERROR CODE

7.1 Display procedure

- It displays the error code when a network error occurred.
- Network error code is displayed only when the following setting is in “ON.”
  [Administrator Settings] -> [Network Settings] -> [Detail Settings] -> [Error Code Display Setting]

7.2 IEEE802.1X

Code	Description
1	• Connection has already been established.
2	• Parameter error.
3	• Unable to find the destination AP (SSID).
4	• The authentication mode does not match the AP (IEEE802.1X/WPA-EAP/WPA-PSK/NONE).
5	• Negotiation of the EAP method failed.
6	• The EAP authentication failed (user ID, password, certificate, etc.)
7	• Encryption negotiation with the AP failed (TKIP/CCMP).
8	• Failed to retrieve the client certificate.
9	• The client certificate has expired.
10	• Verification error of the server certificate (EAP-TLS/EAP-TTLS/PEAP).
11	• Although the WPA-PSK mode is selected, the Pre-Shared Key is not specified.
12	• An authentication error occurred in the WPA-PSK mode (un-matched Pre-Shared Key).
13	• The phase 2 method is not specified (PEAP).
14	• Negotiation of the phase 2 method failed (PEAP).
15	• Response from the server has timed out.
16	• Failed to allocate memory.
17	• Failed to start the supplicant task.
18	• The driver does not work.
19	• The server certificate has expired (EAP-TLS/EAP-TTLS/PEAP).
20	• CA verification error of the server certificate (EAP-TLS/EAP-TTLS/PEAP).
21	• Server ID verification error of the server certificate (EAP-TLS/EAP-TTLS/PEAP).
22	• The CA certificate is not specified (EAP-TLS/EAP-TTLS/PEAP).
23	• The server ID is not specified (EAP-TLS/EAP-TTLS/PEAP).
24	• The setting combination is correct.
25	• Connection and authentication are complete.
26	• The server certificate does not have the expected usage (EAP-TLS/EAP-TTLS/PEAP).
27	• The server certificate has expired (EAP-TLS/EAP-TTLS/PEAP).
28	• Access to the server to check for expiration of the server certificate is rejected (EAP-TLS/EAP-TTLS/PEAP).
29	• Access to the server to check for expiration of the server certificate has timed out (EAP-TLS/EAP-TTLS/PEAP).
30	• Unable to check for expiration because the CRL size that has been retrieved to check for the expiration of the server certificate exceeds the maximum capacity that can be retained (1MB) (EAP-TLS/EAP-TTLS/PEAP).
31	• Incorrect format of the server certificate (EAP-TLS/EAP-TTLS/PEAP).
32	• Verification of the server certificate is invalid (EAP-TLS/EAP-TTLS/PEAP).
33	• Although the environment is configured to use the HDD, it is unable to perform verification because the HDD path has not been specified (EAP-TLS/EAP-TTLS/PEAP).
34	• Unable to perform verification because there are too many certificates to be verified (the maximum number of certificates that can be verified at a time is 20) (EAP-TLS/EAP-TTLS/PEAP).
35	• Parameter error of the certificate (EAP-TLS/EAP-TTLS/PEAP).
36	• Internal error of the certificate verification (EAP-TLS/EAP-TTLS/PEAP).

7.3 LDAP

Code	Description
1	• An invalid operation occurred.
2	• A protocol error occurred.
3	• The time limit is exceeded.
4	• The number of search results has exceeded the maximum number of items allowed.
5	• The comparison result is FALSE.
6	• The comparison result is TRUE.
7	• The LDAP server does not support SASL.
8	• Strong authentication is required.
10	• Unable to trace the link although Referral is specified.

Code	Description
11	• Administration limit on the server has exceeded.
12	• Critical extension is unavailable.
13	• Confidentiality is required.
14	• Intermediary bind result for multi-stage binds
15	• Requested attribute does not exist.
16	• The type is not defined.
17	• An inappropriate matching occurred.
18	• A constraint violation occurred.
19	• The attribute exists or the value has been assigned.
20	• The syntax is invalid.
32	• Cannot find the search route.
33	• The alias is invalid.
34	• The syntax of DN is invalid.
35	• This object is a terminal (leaf).
36	• Cannot de-reference the alias.
48	• Authentication is inappropriate.
49	• Failed to log in to the LDAP server.
50	• The user has insufficient access rights.
51	• The server is busy.
52	• The server is unavailable.
53	• The server does not handle directory requests.
54	• The chain of referrals has looped back to a referring server.
64	• There was a naming violation.
65	• There was an object class violation.
66	• Operation is not allowed on a non-leaf object.
67	• Operation is not allowed on RDN.
68	• The object already exists.
69	• Cannot modify object class.
70	• Results returned are too large.
71	• Multiple directory service agents (DSA) are affected.
80	• An unexpected error occurred.
81	• Unable to connect to the LDAP server.
82	• An internal error occurred.
83	• An encode error occurred.
84	• A decode error occurred.
85	• The connection has timed out.
86	• The supported SASL does not match the LDAP server side.
87	• The searching filter is invalid.
88	• Cancelled by the user.
89	• An internal parameter error occurred.
90	• Failed to allocate memory.
91	• Unable to connect to the LDAP server.
92	• The supported LDAP version does not match the LDAP server side.
93	• The LDAP function did not find the specified control.
94	• The result is not included in the message.
95	• Additional results are to be returned.
96	• Client loop was detected.
97	• The referral limit was exceeded.
128	• Failed to resolve the LDAP server name using the DNS server.
129	• The certificate of the LDAP server has expired.
130	• Mutual authentication using GSS-SPNEGO (Kerberos v5) failed.
131	• The search result remains.
2238	• The CN field of the LDAP server certificate does not match the server address.
2239	• The LDAP server certificate does not have the expected usage for a server.
2240	• The LDAP server certificate is not trusted. • To trust the certificate, the certificate must be registered to the system.
2241	• The LDAP server certificate has expired.
2242	• The CA server rejected the connection.

Code	Description
2243	• The connection to the server that checks for expiration of the certificate has timed out.
2244	• Unable to check for expiration because the CRL size exceeds the maximum capacity that can be retained (1MB).
2261	• The format of the LDAP server certificate is invalid.
2263	• The hard disk has not been set.
2264	• Unable to perform verification because there are too many certificates to be verified (the maximum number of certificates that can be verified at a time is 20).
2266	• Internal error of the certificate verification/management module.
2267	• The device certificate does not exist.
2268	• No certificate is sent from the server.
10000	• Failed in authentication using a PKI card (PKI token).
12236	• The ticket certificate has expired.
12239	• The ticket certificate does not have the expected usage for a server.
12240	• The ticket certificate is not trusted. • To trust the certificate, the certificate must be registered to the system.
12241	• The ticket certificate has expired.
12242	• The CA server rejected the connection.
12243	• The connection to the server that checks for expiration of the certificate has timed out.
12244	• Unable to check for expiration because the CRL size exceeds the maximum capacity that can be retained (1MB).
12261	• The format of the ticket certificate is invalid.
12263	• The hard disk has not been set.
12264	• Unable to perform verification because there are too many certificates to be verified (the maximum number of certificates that can be verified at a time is 20).
12266	• Internal error of the certificate verification/management module.

7.4 E-Mail/Internet Fax

Code	Description
1	• Failed to log in to the E-mail server.
2	• An internal error occurred.
3	• Failed to connect to the server.
4	• The connection has timed out.
5	• Decoding failed due to invalid MIME format or S/MIME format.
6	• Failed to allocate memory.
7	• Job ID is invalid.
9	• Failed to delete an E-mail message.
10	• The mail box is full.
11	• Failed to search the certificate.
12	• Failed to retrieve the device certificate or private key.
13	• An I/O error occurred. • An HDD operation error occurred, or memory capacity of the computer may be insufficient.
14	• The S/MIME function is disabled.
15	• The HDD is disabled.
16	• The format of the certificate from the E-mail sender is invalid.
2236	• The certificate has expired, or the validity period has not yet started.
2238	• The CN field of the certificate does not match the server address.
2239	• The certificate does not have the expected usage.
2240	• The certificate is not trusted. • To trust the certificate, the certificate must be registered to the system.
2241	• The certificate has expired.
2242	• The CA server rejected the connection.
2243	• The connection to the server that checks for expiration of the certificate has timed out.
2244	• Unable to check for expiration because the CRL size exceeds the maximum capacity that can be retained (1MB).
2261	• The format of the certificate is invalid.
2263	• Failed to initialize the certificate verification.
2264	• Unable to perform verification because there are too many certificates to be verified (the maximum number of certificates that can be verified at a time is 20).
2266	• Internal error of the certificate verification.
2267	• The device certificate does not exist.
2268	• No certificate is sent from the server.

7.5 FTP transmission

Code	Description
11	• The network connection is busy.
22	• Parameter error (e.g. the file name is NULL).
27	• Parameter is invalid.
92	• The specified protocol is unavailable.
100	• The device is not connected to the network.
102	• The process is cancelled by a device reset.
105	• Failed to allocate memory.
106	• The FTP connection is already open.
107	• Failed to connect to the server.
110	• The connection has timed out.
111	• The connection has been interrupted.
450	• The file has not been deleted.
451	• The file transfer failed (e.g. due to insufficient server capacity).
452	• The file transfer failed (e.g. due to insufficient server capacity).
530	• Incorrect login name or password.
550	• The specified folder does not exist.
552	• The file operation failed (e.g. due to insufficient server capacity).

7.6 SMB transmission

Code	Description
11	• The network connection is busy.
92	• The protocol is not initialized.
100	• The device is not connected to the network. • The connection has been interrupted.
102	• The network is reset during forwarding.
105	• An I/O buffer capacity shortage occurred.
107	• Failed to connect to the server.
4096	• The host name is not specified. • The specified host name does not exist on the network.
4097	• The user name is not specified. • Unable to log in with the specified user name and password. • The user does not have write permission to the folder. • Failed to log in due to an SMB protocol error.
4098	• The folder name is not specified. • The specified folder does not exist.
4099	• The user name is not specified. • Unable to log in with the specified user name and password. • The user does not have write permission to the folder. • Failed to log in due to an SMB protocol error.
4100	• The specified file name is invalid.
4101	• The specified file already exists and is write-protected. • The folder and the disk are write-protected.
4102	• The specified media to be written is not formatted. • The file system of the specified media to be written is faulty.
4103	• The server capacity is full.
4104	• The server capacity has become full while writing data.
4105	• Other errors to which an error code is not assigned.
4106	• The specified file does not exist.
10000	• Failed in authentication using a PKI card (PKI token).
12236	• The certificate has expired, or the validity period has not yet started.
12239	• The certificate does not have the expected usage.
12240	• The certificate is not trusted. To trust the certificate, the certificate must be registered to the system.
12241	• The certificate has expired.
12242	• The CA server rejected the connection.
12243	• The connection to the server that checks for expiration of the certificate has timed out.
12244	• Unable to check for expiration because the CRL size exceeds the maximum capacity that can be retained (1MB).
12263	• Failed in initialization of the certificate verification.
12264	• Unable to perform verification because there are too many certificates to be verified (the maximum number of certificates that can be verified at a time is 20).

Code	Description
12266	• Internal error of the certificate verification.
12267	• The device certificate does not exist.
12268	• No certificate is sent from the server.

7.7 SMTP transmission

Code	Description
11	• The network connection is busy.
22	• Invalid argument.
27	• The file size is too large.
28	• Insufficient memory of the device.
32	• The pipe is broken.
92	• The specified protocol is unavailable.
100	• The device is not connected to the network.
101	• Unable to reach the destination network.
102	• The connection aborted by the network.
105	• A buffer shortage occurred.
107	• No connection exists with the client.
108	• The connection has been interrupted.
110	• The operation has timed out.
111	• The connection is rejected.
112	• The host is shut down.
421	• SMTP server error. Since the service is unavailable, the transfer channel is closed.
432	• SMTP server error. The password must be changed.
450	• SMTP server error. Unable to access to the mail box.
451	• SMTP server error. The requested action has been cancelled because an error occurred while processing a job.
452	• SMTP server error. Shortage of the system storage capacity.
453	• SMTP server error. No E-mail massage.
454	• SMTP server error. Temporary authentication failure.
458	• SMTP server error. Unable to queue a message to the node.
459	• SMTP server error. The node is not permitted.
499	• SMTP server error. An unsupported SMTP error code of 400s is received from the SMTP server.
500	• SMTP server error. Syntax error (command unrecognized).
501	• SMTP server error. Syntax error in parameters or arguments.
502	• SMTP server error. The command is not implemented.
503	• SMTP server error. Bad sequence of commands.
504	• SMTP server error. The command parameter is not implemented.
521	• SMTP server error. The server does not receive E-mail messages.
530	• SMTP server error. The access is rejected.
534	• SMTP server error. The authentication mechanism is too weak.
535	• SMTP server error. Authentication error.
538	• SMTP server error. The requested authentication mechanism requires encryption.
550	• SMTP server error. The requested action is not executed.
551	• SMTP server error. The user is not connected locally.
552	• SMTP server error. The requested E-mail action is cancelled.
553	• SMTP server error. The requested action is not accepted.
554	• An SMTP server error, or an internal error when sending data. The transaction failed.
555	• SMTP server error. MAIL/RCPT parameter error.
599	• SMTP server error. An unsupported SMTP error code of 500s is received from the SMTP server.
2236	• The certificate has expired, or the validity period has not yet started.
2238	• The CN field of the certificate does not match the server address.
2239	• The certificate does not have the expected usage.
2240	• The certificate is not trusted. • To trust the certificate, the certificate must be registered to the system.
2241	• The certificate has expired.
2242	• The CA server rejected the connection.
2243	• The connection to the server that checks for expiration of the certificate has timed out.
2244	• Unable to check for expiration because the CRL size exceeds the maximum capacity that can be retained (1MB).
2261	• The format of the certificate is invalid.

Code	Description
2263	• Failed to initialize the certificate verification.
2264	• Unable to perform verification because there are too many certificates to be verified (the maximum number of certificates that can be verified at a time is 20).
2266	• Internal error of the certificate verification.
2267	• The device certificate does not exist.
2268	• No certificate is sent from the server.
3000	• An unexpected error occurred.
3001	• An unexpected error occurred within the library being used.
3002	• An invalid channel is specified.
3003	• SMTP server address is invalid.
3004	• Parameter error (MIMEBodyHeader).
3005	• Parameter error (DisplayName).
3006	• Parameter error (character set).
3007	• Parameter error (From address).
3008	• Parameter error (To address).
3009	• Parameter error (CC address).
3010	• Parameter error (BCC address).
3011	• Parameter error (pEmailSet is NULL).
3012	• Parameter error (destination certificate is NULL).
3013	• Parameter error (E-mail body).
3014	• The HDD is disabled.
3015	• The S/MIME function is disabled.
3016	• The device certificate cannot be used in S/MIME (e.g. self-signed certificate error, the private key type is not RSA).
3018	• An invalid encryption algorithm is specified.
3019	• An invalid signature algorithm is specified.
3020	• The E-mail address included in the destination certificate does not match the destination address (To/Cc/Bcc).
3021	• The E-mail address included in the certificate does not match the sender (From) address.
3022	• Format error of the certificate.
3023	• Parameter error (Disposition-Notification-To).
3024	• Message syntax error of the receiver side.
3025	• The SMTP server does not support the STARTTLS command.
3026	• PKI card access error.

7.8 WebDAV transmission

Code	Description
11	• The network connection is busy.
22	• The format of the URL of the target resource is invalid. • Parameter error.
27	• Attempted to send data that exceeds the maximum transferrable size for transfer coding.
92	• WebDAV transmission is disabled.
100	• The device is not connected to the network.
102	• The process is cancelled by a device reset.
105	• A buffer shortage occurred.
106	• The connection has already been established.
107	• The connection to the WebDAV server failed (including connection time out).
125	• The connection has been interrupted with the condition that is insufficient to the specified size.
401	• Authentication error.
407	• Proxy authentication error.
1001	• The server does not support WebDAV. • Unable to upload data to the server.
1002	• The intermediate resource is not a collection (directory) (e.g. the specified folder does not exist).
1003	• The target resource is a collection (directory).
1012	• Although “https” is specified for the resource URL, the connection is interrupted because the WebDAV server certificate has expired.
1013	• The CONNECT method is issued to the proxy server to establish an SSL connection via a proxy, but it is rejected.
1017	• A communication error occurred while sending a request.
1018	• A communication error occurred while receiving a response.
1027	• Content-Length exceeds the maximum transferable size.
1030	• Although use of a proxy has been specified, the proxy setting information is unavailable.

Code	Description
1031	• The connection to the proxy server failed (including connection time out).
1098	• Failed in chunk TX to SharePoint Server.
1099	• Other internal error occurred (e.g. memory shortage).
2236	• The certificate has expired, or the validity period has not yet started.
2238	• The CN field of the certificate does not match the server address.
2239	• The certificate does not have the expected usage.
2240	• The certificate is not trusted. • To trust the certificate, the certificate must be registered to the system.
2241	• The certificate has expired.
2242	• The CA server rejected the connection.
2243	• The connection to the server that checks for expiration of the certificate has timed out.
2244	• Unable to check for expiration because the CRL size exceeds the maximum capacity that can be retained (1MB).
2261	• The format of the certificate is invalid.
2263	• Failed to initialize the certificate verification.
2264	• Unable to perform verification because there are too many certificates to be verified (the maximum number of certificates that can be verified at a time is 20).
2265	• Parameter error.
2266	• Internal error of the certificate verification.
2267	• The device certificate does not exist.
2268	• No certificate is sent from the server.

7.9 SMB browsing

Code	Description
32	• The connection has been interrupted.
92	• The protocol is not initialized.
100	• The device is not connected to the network. • The internal channel detected an error immediately before establishing communication.
107	• Failed to connect to the server.
4096	• The group name/host name is not specified. • The specified group name/host name does not exist on the network.
4097	• The user name is not specified. • Unable to log in with the specified user name and password. • Failed to log in due to an SMB protocol error.
4098	• Administrative shares do not exist. • The shared resource name is not specified. • The shared resource does not exist.
4099	• The user name is not specified. • Unable to log in with the specified user name and password. • Failed to log in due to an SMB protocol error.
4102	• The specified media to be written is not formatted. • The file system of the specified media to be written is faulty.
4105	• Other errors to which an error code is not assigned.
4352	• The browser machine (master browser/backup browser) is not found.
4353	• Unable to log in to the browser machine (master browser/backup browser).
4354	• The sub folder does not exist.
4355	• The request is not accepted due to an invalid call sequence etc.
4368	• The number of groups is too large.
4369	• The number of host PCs is too large.
4370	• The number of shared resources is too large.
10000	• Failed in authentication using a PKI card (PKI token).
12236	• The certificate has expired, or the validity period has not yet started.
12239	• The certificate does not have the expected usage.
12240	• The certificate is not trusted. To trust the certificate, the certificate must be registered to the system.
12241	• The certificate has expired.
12242	• The CA server rejected the connection.
12243	• The connection to the server that checks for expiration of the certificate has timed out.
12244	• Unable to check for expiration because the CRL size exceeds the maximum capacity that can be retained (1MB).
12263	• Although the environment is configured to use the HDD, it is unable to perform verification because the HDD path has not been specified.
12264	• Unable to perform verification because there are too many certificates to be verified (the maximum number of certificates that can be verified at a time is 20).

Code	Description
12266	• Internal error of the certificate verification.
12267	• The device certificate does not exist.
12268	• No certificate is sent from the server.

7.10 User authentication

Code	Description
1	• Invalid parameter (e.g. the number of characters exceeds the limit, blank). • The authentication function setting is disabled.
2	• Failed to resolve the name using the DNS server.
3	• Unable to find the authentication server.
4	• Failed to authenticate.
5	• Failed to allocate memory. • An unexpected error occurred.
6	• An authentication request is received while an internal task of the user authentication client is being performed.
7	• The network was reset during user authentication.
8	• A memory shortage occurred.
9	• Time out occurred.
10000	• Failed in authentication using a PKI card (PKI token).
12236	• The certificate has expired, or the validity period has not yet started.
12239	• The certificate does not have the expected usage.
12240	• The certificate is not trusted. To trust the certificate, the certificate must be registered to the system.
12241	• The certificate has expired.
12242	• The CA server rejected the connection.
12243	• The connection to the server that checks for expiration of the certificate has timed out.
12244	• Unable to check for expiration because the CRL size exceeds the maximum capacity that can be retained (1MB).
12261	• The format of the certificate is invalid.
12263	• The hard disk has not been set.
12264	• Unable to perform verification because there are too many certificates to be verified (the maximum number of certificates that can be verified at a time is 20).
12266	• Internal error of the certificate verification/management module.

7.11 WebDAV client (Response reception)

Code	Description
0	• Succeeded in receiving a response, but the response body is not applied.
1	• Succeeded in receiving a response, but the response body is still to be received.
2	• Succeeded in receiving a response body, and completed the reception of the whole response body.
3	• Reception time out occurred.
4	• Reception error occurred. • Or an invalid request URL is specified.
5	• The size of the Content-Length or the receive size exceeds the transferable size. • The size of the message body is too large.
6	• The process is cancelled by a device reset. • The size of the message body exceeds the maximum transferable size.
7	• Internal error occurred. • The process is cancelled by an internal reset.

7.12 WebDAV client (Request sending)

Code	Description
0	• Succeeded in sending a request (waiting for a response reception).
1	• Succeeded in sending a request (waiting for a command to send the request body).
2	• The ID of the client that is not opened is specified.
3	• The request method that is not supported has been specified.
4	• An invalid request URL is specified.
5	• The size of the message body is too large.
6	• The size of the message body exceeds the maximum transferable size.
7	• The process is cancelled by an internal reset.
8	• Failed to connect to the WebDAV server.
9	• An error occurred while sending data to the WebDAV server.
10	• A timeout occurred while sending data to the WebDAV server.

Code	Description
11	• Failed to connect to the proxy server.
12	• The proxy server rejected the connection request.
13	• Although use of a proxy has been specified, the proxy setting in-formation is unavailable.
14	• Failed to authenticate the proxy server.
15	• Other error was returned from the proxy server.
16	• An internal error occurred.
17	• The process is cancelled because MIO_REQBODY_ERROR is specified by the device application.
18	• An invalid PIN code is specified.
19	• Failed to retrieve a ticket.
20	• The internally specified parameter is invalid.
2236	• The certificate has expired, or the validity period has not yet started.
2238	• The CN field of the certificate does not match the server address.
2239	• The certificate does not have the expected usage.
2240	• The certificate is not trusted. • To trust the certificate, the certificate must be registered to the system.
2241	• The certificate has expired.
2242	• The CA server rejected the connection.
2243	• The connection to the server that checks for expiration of the certificate has timed out.
2244	• Unable to check for expiration because the CRL size exceeds the maximum capacity that can be retained (1MB).
2261	• The format of the certificate is invalid.
2263	• Failed to initialize the certificate verification.
2264	• Unable to perform verification because there are too many certificates to be verified (the maximum number of certificates that can be verified at a time is 20).
2266	• Internal error of the certificate verification.
2267	• The device certificate does not exist.
2268	• No certificate is sent from the server.

7.13 WSD scan

Code	Description
1	• The specified client is not registered.
2	• Parameter is invalid.
3	• The Web service or WS scan function is disabled.
4	• The device is not connected to the network.
5	• Waiting for connection from CP.
6	• The certificate of the destination computer is not valid when the validity period of a certificate is checked.
11	• The network connection is busy.
22	• Invalid argument.
92	• The Web service or WS scan function is disabled.
102	• The network connection is cancelled by a device reset.
103	• The connection has been interrupted.
105	• A memory shortage occurred.
107	• No connection exists with the client.
110	• The operation has timed out.
125	• The RetrieveImage waiting period has timed out.
2236	• The SSL certificate has expired.
2238	• The CN field of the certificate does not match the server address.
2239	• The certificate does not have the expected usage.
2240	• The certificate is not trusted. • To trust the certificate, the certificate must be registered to the system.
2241	• The certificate has expired.
2242	• The CA server rejected the connection.
2243	• The connection to the server that checks for expiration of the certificate has timed out.
2244	• The size of the expiration list is too large.
2261	• The format of the certificate is invalid.
2263	• Although the environment is configured to use the HDD, it is unable to perform verification because the HDD path has not been specified.
2264	• Unable to perform verification because there are too many certificates to be verified (the maximum number of certificates that can be verified at a time is 20).
2265	• Parameter of the certificate verification is invalid.

Code	Description
2266	• Internal error of the certificate verification/management module.
2267	• The device certificate does not exist.
2268	• No certificate is sent from the server.

7.14 Bluetooth

Code	Description
0	• Object data reception is completed within the specified range. (Not at the terminal data)
1	• Object data reception is completed within the specified range. (At the terminal data)
2	• Failed to communicate.
3	• An error occurred on the hardware related to Bluetooth.
4	• Failed to allocate memory.
5	• Interrupted from the device side.

7.15 GSS-API

Code	Description
513	• Failed to allocate memory.
514	• Parameter error.
515	• Already been used.
516	• The number of registered services has exceeded the maximum limit.
517	• The service name is invalid.
518	• The number of security conontexts has exceeded the maximum limit.
519	• The security context ID is invalid.
520	• Message size range error.
1025	• It needs to be continued (not an error).
1026	• The certificate has expired.
1027	• The context has expired.
1028	• The security system is not supported.
1029	• The signature is invalid.
1030	• The token is invalid.
1031	• Duplicated detection of token.
1032	• The token is too old.
1033	• Token sequence error.
2049	• Failed to connect Active Directory or authenticate.
2050	• Failed to create an account.
2051	• Failed to set a password.
2052	• Failed to set a service principle.
4097	• Can not find the service key.
4098	• File type error.
4099	• The specified Key tab does not exist.

7.16 Scan server transmission

Code	Description
1	• The action is not supported.
2	• Parameter is invalid.
3	• The operation failed.
4	• A temporary error occurred on the scan server.
5	• An internal error occurred on the scan server.
6	• The scan server returned an error due to operation by an unauthorized user.
7	• The scan server returned an error due to invalid request.
8	• Addresses for secondary distribution are not supported.
9	• The destination address is not included in the scan process.
10	• The scan server returned an error due to access by an unauthorized user.
11	• The scan server returned an error due to a request for invalid action.
12	• The scan server returned an error due to transmission of unregistered the scan process to the scan server.
13	• The scan server returned an error due to a request for invalid action.
14	• The scan server returned an error due to use of a format that is not supported.
2236	• The SSL certificate has expired.

Code	Description
2238	• The CN field of the certificate does not match the server address.
2239	• The certificate does not have the expected usage.
2240	• The certificate is not trusted. • To trust the certificate, the certificate must be registered to the system.
2241	• The certificate has expired.
2242	• The CA server rejected the connection.
2243	• The connection to the server that checks for expiration of the certificate has timed out.
2244	• The size of the expiration list is too large.
2261	• The format of the certificate is invalid.
2263	• Although the environment is configured to use the HDD, it is unable to perform verification because the HDD path has not been specified.
2264	• Unable to perform verification because there are too many certificates to be verified (the maximum number of certificates that can be verified at a time is 20).
2265	• Parameter of the certificate verification is invalid.
2266	• Internal error of the certificate verification/management module.
2267	• The device certificate does not exist.
2268	• No certificate is sent from the server.

7.17 Packet capture

Code	Description
1	• Failed to allocate memory.
2	• Parameter error.
3	• An operation flow error occurred due to the capture operation in progress.
4	• Files error. The file does not exist, or a writing error or read-out error occurs during internal processing.
5	• Error other than Codes 1 to 4

8. FAX TROUBLE CODE

The error in the transmission/reception system

- The error in the Txx/Rxx system may be caused under the effect of line noise, etc. even in usual operating condition.
- If the error arises often, output the activity report, fax setting list, protocol trace list, parameter list, address book list, group address list and program list and obtain detailed information on the error status, conditions which may cause the error, etc. from the user and contact KM.

8.1 B0##

Code No.	Category	Contents of error	How to correct
B001	FAX board error	FAX board error 1 (FAX ROM check sum error)	• Pull out and insert the connector of FAX board to check its installation. • If the trouble is not yet corrected, hardware of the FAX board may be defective. Replace the FAX board in such a case.
B002		FAX board error 2 (DPRAM check error)	
B003		FAX board error 3 (FAX initialization NG)	
B051		FAX board installation error (Line 1).	• Pull out and insert the connector of FAX board to check its installation. • If the trouble is not yet corrected, check if the fax (main) is set to [Unset] on the [System 2] -> [Option board Status] screen in the service mode. • If it is set to [Unset], set to [Set].
B052		FAX board installation error (Line 2).	• Pull out and insert the connector of FAX board to check its installation. • If the trouble is not yet corrected, check if the fax (sub) is set to [Unset] on the [System 2] -> [Option board Status] screen in the service mode. • If it is set to [Unset], set to [Set].

8.2 B11#

Code No.	Category	Contents of error	How to correct
B110	FAX driver error	Instance generation error or observer registration error	Turn OFF/ON the main power switch.
B111		Configuration space initialization NG	
B112		Semaphore acquisition, release error	
B113		Sequence error among main body tasks	
B114		Message queue control error	
B115		Main body - sequence error among FAX boards	Pull out and insert the connector of FAX board to check its installation.
B116		FAX board nonresponse (Nonresponse after initialization)	
B117		ACK waiting timeout error	
B118		Receiving undefined frame	
B119		DMA transfer error	

8.3 B12#

Code No.	Category	Contents of error	How to correct
B120	JC	Soft error (FAX board side)	Turn OFF/ON the main power switch.
B122		Device error (GA LOCAL SRAM)	• Turn OFF/ON the main power switch. • If the trouble is not yet corrected, hardware of the FAX board may be defective. Replace the FAX board in such a case.
B123		Device error (DRAM)	
B125		Device error (GA)	
B126		Timeout error due to nonresponse from codec control during suspension process	Turn OFF/ON the main power switch.
B127		Timeout error due to nonresponse from communication control during suspension process	
B128		Timeout error due to nonresponse from LINE control during suspension process	

8.4 B13#

Code No.	Category	Contents of error	How to correct
B130	Driver error (FAX board side)	Driver soft error	Turn OFF/ON the main power switch.
B131		Reception frame length error from main	
B132		Reception frame header error from main	
B133		232C I/F sequence error	
B134		DPRAM I/F sequence error	

Code No.	Category	Contents of error	How to correct
B135		DPRAM CTL/STS register error	
B136		ACK waiting timeout	
B137		DPRAM RESET reception	

8.5 B14#

Code No.	Category	Contents of error	How to correct
B140	Soft error (FAX board side)	MSG I/F error with job control	Turn OFF/ON the main power switch.
B141	Soft error	I/F error with driver	
B142	I/F error with main	Undefined command reception	
B143		Command frame length error	
B144		Command parameter length error	
B145		Undefined parameter	
B146		Command/response sequence error	

8.6 B15#

Code No.	Category	Contents of error	How to correct
B150	Line control	External class instance acquisition error	Turn OFF/ON the main power switch.
B151		Job start error (starting job parameter error/child job generation error)	
B152		Doc access error (report buf access error)	
B153		Response wait timeout from external task	
B154		Internal que table control error (create/ enque/deque)	

8.7 B16#

Code No.	Category	Contents of error	How to correct
B160	1 destination control	Instance generation error	Turn OFF/ON the main power switch.
B161		Timeout error	
B162		Interface error	
B163		Message que control error	
B164		Semaphore acquisition release error	
B165		Observer registration error	
B166		Reception resource check error	
B167		Deployment error of sending image information	
B168		Serialization error of receiving image	
B169		Access error to quick memory data	

8.8 B17#

Code No.	Category	Contents of error	How to correct
B170	Page control	Internal que table control error (create/ enque/deque)	Turn OFF/ON the main power switch.
B171		Instance generation error	
B172		Timeout error	
B173		Interface error	
B174		Semaphore acquisition release error	
B175		Observer registration error	
B176		Unable to secure TTI domain	
B177		Error return from TTI rasterizer	
B178		Receiving job generation error	

8.9 B18#

Code No.	Category	Contents of error	How to correct
B180	Page control	Access error to quick sending memory data	Turn OFF/ON the main power switch.

Code No.	Category	Contents of error	How to correct
B181		BlockBuff acquisition error	
B182		Sending block image error (Req, restore)	
B183		Receiving block image error (Req, store)	
B184		Storage error of receiving image information	
B185		Receiving data size logic error (Receiving data are not multiples of dotline)	
B186		ImageBuf acquisition (alloc) error	
B187		Error return from compressor	
B188		BandBuf control error (newInstance/get/free)	

8.10 B19#

Code No.	Category	Contents of error	How to correct
B190	USB	USB IF error (OS notifies an error during configuration setting after recovery from the sleep or attach.)	Turn OFF the main power switch, then check the connection of USB, turn ON the main power switch.
B191		USB IF error (EndPoint1: Bulk Out (command, transmitted image data)) (error retry 1 min. timeout)	
B192		USB IF error (EndPoint2: Bulk In (response, received image data)) (error retry 5 sec. timeout)	
B193		USB IF error (EndPoint3: Interrupt In (fax board status)) (error retry 1 min. timeout)	
B194		USB IF error (EndPoint4: Bulk Out (main body status)) (error retry 3 sec. timeout)	
B195		USB IF error (Attach not detected for 1 min. after recovery from sleep)	
B196		USB IF error (Detach not detected for 1 min. after recovery from sleep)	

8.11 T0#

Code No.	Category	Contents of error	How to correct
T00	Sending	T1 timeout. no response obtained from the machine on the other end of the line. (35 second)	Check that the address number is correct.
T01		T1 over after the mode has been changed (35 seconds)	-
T02		DCN reception in DIS waiting	The remote station may not receive the data due to paper shortage, full memory, etc.
T03		Unexpected command reception in DIS waiting	-
T04	Not used		
T05	Sending	FIF not matching with the remote station (remote station without the function).	-
T06		DCN reception in CFR/FTT waiting	-
T07	Not used		
T08	Sending	Training failure at 2400 bps	The line may be in trouble. Check the line noise.
T09		No response to DCS	The line may be disabled because the user on the remote station disconnected it.

8.12 T1#

Code No.	Category	Contents of error	How to correct
T10	Not used		
T11	Sending	DCN reception while waiting for post message responses	The remote station may not receive the data due to paper shortage, full memory, etc.
T12		Unexpected command reception while waiting for post message responses	-
T13		No response while waiting for post message responses	The remote station may not receive the data due to paper shortage, full memory, etc.
T14	Not used		
T15	Not used		

Code No.	Category	Contents of error	How to correct
T16	Not used		
T17	Not used		
T18	Sending	No reception ability in a remote station	The remote station may not receive the data due to paper shortage, full memory, etc.
T19	Not used		

8.13 T2#

Code No.	Category	Contents of error	How to correct
T20	Not used		
T21	Not used		
T22	Not used		
T23	Not used		
T24	Not used		
T25	Not used		
T26	Not used		
T27	Not used		
T28	ECM sending	Timeout by RR/RNR (60 seconds)	-
T29	Not used		

8.14 T3#

Code No.	Category	Contents of error	How to correct
T30	Not used		
T31	Not used		
T32	ECM sending	Fall back over by CTC	The line may be in trouble. Check the line noise.
T33	Not used		
T34	Not used		
T35	ECM transmission	No responses to RR	-
T36		DCN reception to RR	-
T37	Not used		
T38	F code polling TX	SID is received when SEP is received	-
T39	Not used		

8.15 T4#

Code No.	Category	Contents of error	How to correct
T40	Calling	Software error at calling	-
T41	Not used		
T42	Sending	RTN/PIN reception	-
T43		Three continuous CRP signal reception	-
T44		Time error between frames at transmission	-
T45	Not used		
T46	Not used		
T47	Not used		
T48	Check Destination	Line disconnected due to no match as a result of CSI check.	Telephone number may not be set on the remote station. Check the CSI signal of the remote station in the protocol trace list.
T49	Not used		

8.16 T5#

Code No.	Category	Contents of error	How to correct
T50	FAX-CSRC	Host terminal ID inconsistency	-
T51	Sending	The FAX board does not respond during transmission	The line may be in trouble. Check the line noise.
T52	Not used		
T53	Not used		
T54	Not used		
T55	Not used		
T56	Not used		

Code No.	Category	Contents of error	How to correct
T57	Not used		
T58	Polling reception	Calling by polling reception, but a remote station does not have polling transmission documents	Polling original may not be set on the remote station.
T59	Not used		

8.17 T6#

Code No.	Category	Contents of error	How to correct
T60	Polling transmission	Received the polling transmission request (DTC), but there are no polling transmission documents	Polling original may not be set on your machine. Polling TX is enabled only when the polling transmission original is registered.
T61	F-code polling transmission	Unsatisfactory conditions for receive polling TX request.	Bulletin board original may not be set. Bulletin board TX is enabled only when the bulletin board transmission original is registered.
T62	F-code polling transmission	Box number specified by SEP is not valid.	Bulletin board box number from the remote station may be incorrect.
T63	Not used		
T64	Not used		
T65	Not used		
T66	Not used		
T67	Not used		
T68	Not used		
T69	Not used		

8.18 T7#

Code No.	Category	Contents of error	How to correct
T70	Not used		
T71	Not used		
T72	Not used		
T73	Transmission	Modem response waiting T.0 (60 seconds)	-
T74	V34	No changes in the V34 modem status	-
T75		V34 signal sending error	-
T76		CS2 is not turned to ON	-
T77	Not used		
T78	Transmission	Codec control soft ware error	-
T79		Job control soft error at transmission	-

8.19 T8#

Code No.	Category	Contents of error	How to correct
T80	Call control	LOOP current detection NG when CML is turned ON at calling	• The line may not be connected. • Check the line connection status.
T81		Dial Tone detection NG when CML is turned ON at calling	
T82		Answer tone (CED/DIS) waiting timeout after dialing at calling	-
T83		Busy tone detection at calling	-
T84		Line control dial error	-
T85		Short disconnection was detected after LOOP current detection at calling	-
T86		Dial tone continues after dialing	-
T87	Not used		
T88	Not used		
T89	Control unit	When the control unit is connected, a communication error is caused due to capacity shortage and communication is finished.	-

8.20 T9#

Code No.	Category	Contents of error	How to correct
T90	Multiple lines Line auto switch	TX line undetermined	Data may have been transmitted with no line specified when "No" is selected for TX-Line Auto Switch Setting. Specify the line to be used to send.
T91	Multiple lines Line auto switch	TX line undetermined	Data may have been transmitted with an illegal line specified. Specify a different line and transmit the data.
T92	Not used		
T93	Not used		
T94	Not used		
T95	Call control	When called, short disconnection of LOOP current was detected during a call	-
T96	Not used		
T97	Transfer	Transmission request was received with no FAX board installed. *	-
T98		Transmission request of images that cannot be transmitted were received. (Color images) *	-
T99	Call control	Remote stations number is deleted while waiting for abbreviated or one-touch re-dialing (redial / transmission / polling reception) *	-

- *: The corresponding error code is not displayed on the control panel even if the error occurs.

8.21 R0#

Code No.	Category	Contents of error	How to correct
R00	Reception	DCS was not received within 35 seconds (T1 over)	The dialed telephone number may be incorrect.
R01		T1 timeout after EOM sending	-
R02		DCN reception in DCS waiting	The line may be disabled because the user on the remote station disconnected it.
R03		Unexpected command reception in DCS waiting	-
R04		FIF error of DCS	-
R05	Not used		
R06	Not used		
R07	Reception	Image information does not come in image information waiting	The line may be disabled because the user on the remote station disconnected it.
R08		CD OFF while receiving image information	
R09		DCN reception in post message waiting	

8.22 R1#

Code No.	Category	Contents of error	How to correct
R10	Reception	Unexpected command reception in post message waiting	-
R11		Command was not received which waiting for post message	The line may be disabled because the user on the remote station disconnected it.
R12		Timeout during EOL-EOL	-
R13	Not used		
R14	Not used		
R15	Not used		
R16	Not used		
R17	Not used		
R18	Reception	Resource check error (line disconnected due to ongoing communication)	Space in the hard disk may become short. Unnecessary data should be deleted to secure the space in the hard disk.
R19	Not used		

8.23 R2#

Code No.	Category	Contents of error	How to correct
R20	Reception	Line disconnection by receive reject function	Call was received from a user who is in the register of addresses to be rejected.

Code No.	Category	Contents of error	How to correct
R21	CUG reception	No match of password in the closed network RX setting	Check the password.
R22		No password received in the closed network RX setting	Check the setting of closed network RX.
R23	Not used		
R24	ECM reception	RR-RNR repeats for 2 minutes	-
R25		Command was not received while waiting for responses to RNR	-
R26		Unexpected command was received while waiting for responses to RNR	-
R27		DCN reception while waiting for responses to RNR	-
R28		The counter is abnormal of the post messages received (PC/BC).	-
R29		Timeout (35 seconds) between frames occurred	-

8.24 R3#

Code No.	Category	Contents of error	How to correct
R30	Not used		
R31	Not used		
R32	Reception	Line disconnected because there is no appropriate confidential user box while automatic user box generation is inhibited.	Confidential box No. received from the remote station may be incorrect.
R33		DIS reception to DTC (German specifications only)	-
R34	F code confidential reception	PWD was received when SUB was received.	-
R35	Not used		
R36	Not used		
R37	V34	CS2 is not turned to ON.	-
R38		No change in V34 modem and status	-
R39	Not used		

8.25 R4#

Code No.	Category	Contents of error	How to correct
R40	When called	Soft error when called	-
R41	Not used		
R42	Not used		
R43	Not used		
R44	Not used		
R45	Reception	Phase C timeout (NonECM reception only)	-
R46	Not used		
R47	Not used		
R48	Not used		
R49	Reception	DCN reception while waiting for image information	The line may be disabled because the user on the remote station disconnected it.

8.26 R5#

Code No.	Category	Contents of error	How to correct
R50	Reception	No. of error lines exceeds.	• The line may be in trouble. • Check the line noise.
R51		The FAX board does not respond during reception	• The line may be in trouble. • Check the line noise.
R52	Not used		
R53	Not used		
R54	Not used		
R55	Not used		

Code No.	Category	Contents of error	How to correct
R56	Not used		
R57	Not used		
R58	Not used		
R59	Not used		

8.27 R6#

Code No.	Category	Contents of error	How to correct
R60	Reception	Reception image error (RTN/PIN sending)	• The line may be in trouble. • Check the line noise.
R61	Not used		
R62	Not used		
R63	Reception	Three continuous CRP signal reception	-
R64	Not used		
R65	Not used		
R66	SEP polling	SEP polling transmission request was received without SEP polling transmission ability	-
R67	SUB reception	SUB was directed without SUB reception ability	-
R68	Not used		
R69	ECM reception	Communications are cut when EOR is received.	• The line may be in trouble. • Check the line noise.

8.28 R7#

Code No.	Category	Contents of error	How to correct
R70	ECM reception	Decode error occurred in ECM	-
R71	Reception	RTC detection error (No. of EOL is smaller than FP.)	-
R72		Long original larger than the allowable value is received.	Longer original than specified is received from the remote station.
R73		Modem response waiting T.0 (60 seconds)	-
R74		Reception byte size error	-
R75	V34	V34 signal sending error	-
R76		Unexpected command was received in V34 mode phase C reception	-
R77	Reception	Codec control middle ware error	-
R78		Codec control software error	-
R79		Job control soft error during reception	-

8.29 R8#

Code No.	Category	Contents of error	How to correct
R80	Not used		
R81	Not used		
R82	Not used		
R83	Not used		
R84	Not used		
R85	-	R-ISW request received when a machine is running in case of either reserved job exists, image exists in memory, or jam happened.	-
R86	Not used		
R87	Not used		
R88	Not used		
R89	Not used		

8.30 R9#

Code No.	Category	Contents of error	How to correct
R90	Not used		

Code No.	Category	Contents of error	How to correct
R91	Not used		
R92	Turnaround	When the turnaround function is not provided, the line is disconnected if a turnaround order (DTC) is received.	-
R93	F-code reception	Unsatisfactory conditions for confidential RX request	Check the Confidential password.
R94		Unsatisfactory conditions for relay request	Check the Relay password.
R95		Unsatisfactory conditions for forwarding request	-
R96		Confidential box number specified by SUB is not valid.	Confidential box No. received from the remote station may be incorrect.
R97		Unsatisfactory conditions for PC-FAX RX request (Function, PW unmatching)	-
R98	Not used		
R99	Others	Reception command was received from the whole control side before reception signals were detected.	-

8.31 Others

Code No.	Category	Contents of error	How to correct
-	Others	Despite the FAX board is installed in line 2, FAX (circuit2) of [Service Mode] -> [System 2] -> [Option Board Status] is "Unset", if it is set to When the main body is in the sleep mode, line 1 can not receive faxes.	• When using the line 2, make sure that the FAX (system) for line 2 is set up correctly. • When not using the line 2, remove all wirings of the FAX board for line 2.
-		When the main body recovers from the sleep mode while receiving a fax, the ring tone is generated more than the set number of times. (2 to 3 times)	This error is avoidable with any one of the following settings. • Set [Administrator Settings] -> [System Settings] -> [Power Supply/ Power Save Settings] -> [Power Consumption in Sleep Mode] to “Disabled”. • Set [Administrator Settings] -> [Fax Settings] -> [Line Parameter Setting] -> [Number of RX Call Rings] to “0 x”.

9. DIAGNOSTIC CODES

9.1 Outline

- The diagnostic code is a 22-digit hexadecimal code indicating a communication conditions and status.
- The diagnostic code is printed on the activity report.
- The purpose of the diagnostic code is to obtain detailed information of communication results and conditions so as to analyze communication troubles.

9.2 Explanation

9.2.1 The diagnostic code

XX	XX	XX	XX	XX	XX	XX	XX	XX	XX	XX	XX	XX	XX	XX	XX	XX	XX	XX	XX	XX	XX
(1)	(2)	(3)	(4)	(5)	(6)	(7)	(8)	(9)	(10)	(11)	(12)	(13)	(14)	(15)	(16)	(17)	(18)	(19)	(20)	(21)	(22)

9.2.2 Information of communication results and conditions

Item	Description							
	bit7	bit6	bit5	bit4	bit3	bit2	bit1	bit0
(1) Types of call out / called	F network (Japan)	PSTN	Dial-in (Japan)	Telephone	Group	One-touch dialing	Abbreviated dialing	Key pad dialing
(2) Communication mode	Sending	Error page resending	Forwarding transmission	Polled transmission	Receiving	Recovery transmission	Called turnaround	Polling RX
(3) Applied function specification	Mixed size transmission All pages/ cover	Frame erasure transmission	Book mode transmission	2in1 transmission	Original size appointing TX	Upside down	Special scanning non standard/Z-fold/Long	Line used line 1 / 2
(4) One-time communication parameter specification	Timer TX	(not used)	CSRC	PC-Fax transmission (RX/V2)	V.34 appoint transmission	F-code transmission	ECM specification TX	International mode transmission
(5) Box Type/No. (9th digit)	Relay	Confidential	Manual transmission	Bulletin	BOX No. 9th digit [BCD] (Top)			
(6) BOX No. (8th & 7th digits)	BOX No. 8th digit [BCD]				BOX No. 7th digit [BCD]			
(7) BOX No. (6th & 5th digits)	BOX No. 6th digit [BCD]				BOX No. 5th digit [BCD]			
(8) H_RES specification 1 (HR)	400 dpi	300 dpi	200 dpi	(not used)	16 pels/mm	not used	8 pels/mm	(not used)
(9) V_RES specification 1	400 dpi	300 dpi	200 dpi	100 dpi	15.4 l/mm	(not used)	7.7 l/mm	3.85 l/mm
(10) Coding specification/H_RES specification (600 dpi)	600 dpi (H)	(not used)	(JPEG)	JBIG	MMR	MR	MH	THRU
(11) Original length specification/V_RES specification (600 dpi)	600 dpi (V)	(not used)	(Legal)	(Letter)	A3	B4	A4	(not used)
(12) Original length specification	(not used)	No limits	(Legal)	(Letter)	(not used)	B4	A4	(not used)
(13) Speed specification 0	(not used)	(not used)	(not used)	V.29-96	V.29-72	(not used)	V.27-48	V.27-24
(14) Speed specification 1	V.17-144	V.17-120	V.17-96	V.17-72	(V.33-144)	(V.33-120)	(V.33-96)	(V.33-72)
(15) Speed specification 2	V.34-192	V.34-168	V.34-144	V.34-120	V.34-96	V.34-72	V.34-48	V.34-24
(16) Speed specification 3	(not used)	(not used)	V.34-336	V.34-312	V.34-288	V.34-264	V.34-240	V.34-216
(17) MSLT specification	(not used)	(not used)	(not used)	(not used)	(not used)	MSLT of resolution shown as vertical RES		
(18) Communication parameter specification	ECM frame size 0: 256 / 1: 64	ECM	DIAG (CSRC)	(BFT)	(BTM)	PWD	SEP	SUB
(19) Remote station coding specification	(not used)	(not used)	(JPEG)	JBIG	MMR	MR	MH	THRU
(20) Remote station communication parameter (capability)	ECM frame size 0: 256 / 1: 64	ECM	DIAG (CSRC)	(BFT)	(BTM)	PWD	SEP	SUB

Item	Description							
	bit7	bit6	bit5	bit4	bit3	bit2	bit1	bit0
(21) BOX no (4th & 3rd digit)	BOX No. 4th digit [BCD]				BOX No. 3rd digit [BCD]			
(22) BOX no. (2nd & 1st digits)	BOX No. 2nd digit [BCD]				BOX No. 1st digit [BCD]			

- (Not used): bit is set to 0.

10. NETWORK FAX ERROR CODE

- When there occurs any trouble with this machine, the error screen is displayed. And on this error screen, the following error message is shown. Take a necessary step referring to the table given below.

10.1 Error code list of the transmission system

Code	Classification	Details of the error	Redial	Corrective action
N10	Connection error	Server connection error	No	• Check the condition of the other party machine. • Check the network setting of local machine. • Ask the network administrator if the network is operating normally.
N11		Connection declined by the other party machine	No	• Reception is declined. • Check the condition of the other party machine.
N12		Disconnection of the line	Yes	Check to see if there occurs any abnormal condition with the network, such as the disconnection of a cable.
N13		No response received from the network	No	• Check the condition of the other party machine. • Check the network setting of local machine. • Ask the network administrator if the network is operating normally.
N14		Mail delivery error	No	Check the condition of the other party machine. Send it again after waiting for a while.
N15	Remote reset	Connection reset by the other party machine	Yes	Check the condition of the other party machine. Send it again after waiting for a while.
N16	Remote busy	Remote machine is busy	Yes	Check the condition of the other party machine. Send it again after waiting for a while.
N17	LAN access	Communication time out	Yes	Check the condition of the other party machine. Send it again after waiting for a while.
N18	Network	Network	No	• Check the each settings. • Check to see if there occurs any abnormal condition with the network, such as the disconnection of a cable. • After turning off and on the main power switch, send it again.
N20	Memory error	Memory overflow	No	• The memory is full. • Check to see if there is any other job being handled. • With the number of transmission sheets reduced or the resolution for read reduced, send it again.
N21	HDD error	HDD error	No	• HDD is full. • Delete unnecessary files. • With the number of transmission sheets reduced or the resolution for read reduced, send it again.
N22	Conversion error	Conversion error	No	After turning off and on the main power switch, send it again.
N25	Memory overflow	Memory overflow	No	• The memory is full. • Check to see if there is any other job being handled. • With the number of transmission sheets reduced or the resolution for read reduced, send it again.
N35	Forward TX	A request for transmission has been received with the NetFAX with the Function Settings OFF. (A request for transfer of the IP address FAX while the IP Address FAX function is being OFF in the service mode.)	No	-
N36		A request has been received for transmission of images that cannot be sent.	No	-

10.2 Error code list of the reception system

Code	Classification	Details of the error	Corrective action
N50	SMTP reception	SMTP reception error	When the SMTP reception does not start in 60 minutes after connection for an incoming call, this error may be resulted. Ask the sender to send it again.
N51	Decode	In excess of the length specified for reception	Ask the sender to send it again after the length of the text being reduced.
N52		In excess of the number of pages specified for reception	Ask the sender to send it again after the number of text sheets being reduced.
N53		File error	Ask the sender to send it again in a correct file format as shown below. • Internet Fax: TIFF • IP Address Fax: PDF or TIFF
N54		Decode error	The data has been received in an incorrect format. Ask the sender to send it again in a correct format.

11. Open API RELATED TROUBLE

11.1 Outline

- Through the Certification Management System provided by OpenAPI, if error is found in communication between the machine and interacting applications developed by company other than KM, an error message is displayed.

11.2 Types of Trouble

- The Certification Management System provided by OpenAPI certificates and manages communication between MFP and non-KM applications that run on the computer connected to the machine. If trouble is detected, the trouble message is displayed on the control panel of the machine or the screen of the computer on which the applications run. Trouble messages displayed on the control panel of the machine and actions are described below.

NOTE

- **A message that appears on the computer screen may be different depending on the appliaction being used for communication. The corresponding action may be different, so contact the application vendor for an appropriate action.**

<Examples of trouble messages>

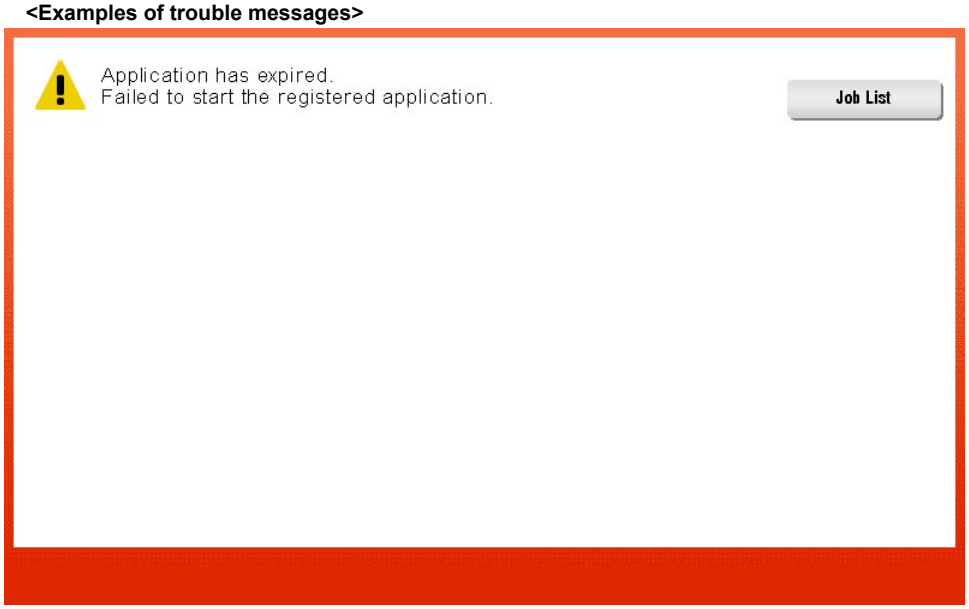

11.3 Solution

- The below describes the OpenAPI certification related trouble messages displayed on the control panel of the machine and actions, dividing them by possible situation.

11.3.1 When using an application

No.	Symptom and message	Action
1	When starting an application, the following message is displayed: Application has expired. Failed to start the registered application.	1. In [Administrator Settings] -> [System Settings] -> [Date/ Time Settings], check that the date and time that is set is same as the actual date and time. If a wrong date and time is set, correct it. 2. Contact the application vendor and obtain a new Solution Key (or the application software itself). Using it, perform the steps below. 1) Delete the application. 2) Using the Solution Key (or the application software itself), register the application again.
	When starting the machine, the following message is displayed: The Enhanced Server Authentication application has expired. Change the User Authentication method to one other than Enhanced Server Authentication.	
2	When starting an application, the following message is displayed: Failed to start the registered application. Please contact your service representative.	In [Service Mode] -> [System1] -> [Marketing Area], change the marketing area of the machine to the one that was selected when the application was registered.
	When starting the machine, the following message is displayed: The enhanced server authentication application cannot be used. Please contact your service representative.	

3	In the screen saver application, after a time set, the screen saver does not work.	1. In [Administrator Settings] -> [System Settings] -> [Date/ Time Settings], check that the date and time that is set is same as the actual date and time. If a wrong date and time is set, correct it. 2. Contact the application vendor and obtain a new Solution Key (or the application software itself). Using it, perform the steps below. 1) Delete the application. 2) Using the Solution Key (or the application software itself), register the application again. 3. In [Service Mode] -> [System1] -> [Marketing Area], change the marketing area of the machine to the one that was selected when the application was registered.

11.3.2 After rewriting the firmware of the machine

No.	Symptom and message	Action
1	When starting an application, the following message is displayed: Failed to start the registered application. Please contact your service representative.	• After deleting the application in question, register the application again.
	When starting the machine, the following message is displayed: The enhanced server authentication application cannot be used. Please contact your service representative.	
	In the screen saver application, after a time set, the screen saver does not work.	

12. TROUBLES THAT DO NOT DISPLAY THE TROUBLE CODE

12.1 Machine is not energized at all (DCPU operation check)

12.1.1 Contents

Trouble type	Machine is not energized at all
Trouble code	-
Rank	-
Detection timing	-
Trouble isolation	-
Relevant electrical parts	• Main power switch (SW1) • Printer control board (PRCB) • MFP board (MFPB) • DC power supply (DCPU)

12.1.2 Procedure

Step	Check item	Location of electrical components	Result	Action
1	Is a power voltage supplied across CN001-1 and 2 on DCPU?	19-T	NO	Check the WIRING from the wall outlet to SW1 to CN001.
2	Are the fuses on DCPU conducting?	-	NO	Replace DCPU.
3	Is DC5 V being output from CN006-5 on DCPU?	22-R	NO	Replace DCPU.
4	Is DC24 V being output to CN007-3 on DCPU?	22-R	NO	• Check the WIRING from the wall MFPB to PRCB to DCPU. • Replace DCPU. • Replace MFPB. • Replace PRCB.
5	The LED on PRCB is blinking?	-	NO	Replace PRCB.
6	Is DC24 V being output to CN007-1 on DCPU?	22-R	NO	Replace DCPU.

• N.1. bizhub 364e/284e/224e

12.2 Fusing heaters do not operate

12.2.1 Contents

Trouble type	Fusing heaters do not operate
Trouble code	-
Rank	-
Detection timing	-
Trouble isolation	-
Relevant electrical parts	• Main power switch (SW1) • Right door switch (SW3) • DC power supply (DCPU) • Printer control board (PRCB) • Fusing unit

12.2.2 Procedure

Step	Check item	Location of electrical components	Result	Action
1	Is the power source voltage applied across CN008-5 on DCPU? During this time, the right door should be closed.	20-R	NO	Check wiring from power outlet to SW1 to CN008 to SW3.
2	Is the power source voltage applied across PRCB CN5-6, 9?	26-E	YES	Replace the fusing unit.
			NO	Replace DCPU. Replace PRCB.

• N.1. bizhub 364e/284e/224e

12.3 Power is not supplied to option

12.3.1 DF-701/DF-624

(1) Procedure

Step	Check item	Location of electrical components	Result	Action
1	Is DC24 V being output from CN1DF-1 on DF-701/DF-624?	15-I	YES	Malfunction in DF-701/DF-624.

2	Is DC24 V being output from CN004-1 on DCPU?	15-R	NO	Check wiring from DCPU to DF-701/ DF-624.
3	Is the fuse on DCPU conducting?	-	YES	Replace DCPU.
			NO	Malfunction in DF-701/DF-624.

- N.1. bizhub 364e/284e/224e
- N.2.1 DF-701
- N.2.2 DF-624

12.3.2 PC-110/PC-210/PC-410

(1) Procedure

Step	Check item	Location of electrical components	Result	Action
1	Is DC24 V being applied to CN65?	13-D	NO	Malfunction in cabinet.
2	Is DC24 V being output from CN28-1 on PRCB?	13-E	NO	Check wiring from DCPU to CN28 to cabinet.
3	Is the fuse on DCPU conducting?	-	YES	Replace DCPU.
			NO	Malfunction in cabinet.

- N.1. bizhub 364e/284e/224e
- N.2.3 PC-110
- N.2.4 PC-210
- N.2.5 PC-410

12.3.3 FS-533/FS-534

(1) Procedure

Step	Check item	Location of electrical components	Result	Action
1	Are DC24 V being applied to CN1FN?	17-I	NO	Malfunction in finisher.
2	Are DC24 V being applied to CN004-5 on DCPU?	15-R	NO	Check wiring from DCPU to finisher.
3	Is the fuse on DCPU conducting?	-	YES	Replace DCPU.
			NO	Malfunction in finisher.

- N.1. bizhub 364e/284e/224e
- N.2.6 FS-533
- N.2.7 FS-534

13. OTHER TROUBLE

13.1 Firmware error warning

- Warning message: A firmware error occurred.
- While the enhanced security mode is enabled, if MFP is restarted by turning the main power switch OFF and ON or other operations, self-testing is performed internally. If the self-testing detects firmware error, this warning appears.

13.1.1 Action

1. Set Enhanced Security Mode to “OFF” in Administrator Settings and touch “OK.”
2. Turn OFF the main power switch, wait for 10 sec. or more, and turn ON the main power switch.
3. Check that the warning screen is not displayed.
4. Rewrite the firmware.
5. Set the Enhanced Security Mode.

13.2 HDD lock password error warning

13.2.1 Detection timing

- Warning message: Reset HDD Lock Password.
- There is a mismatch between the password registered in the HDD and that registered in the main body.
- Wrong machine type information is input.

13.2.2 Action

(1) Checking the machine type information

NOTE

- **Perform the following steps, if this malfunction occurs when the MFP board is replaced with a new one.**
- **Prepare a USB flash drive in which firmware data is recorded.**

1. Call the firmware update selection screen to the display.
   NOTICE
   - J.2. USB memory
2. Touch [Machine Type Select].
3. Check the setting values of [Machine] and [Type] and enter the correct setting values. For details, see J.2.4 Entering the machine type information.
4. Turn OFF and ON the main power switch. If a USB flash drive has been used, first remove the USB flash drive and then turn ON the main power switch.

(2) Re-registering the correct HDD Lock Password

1. Touch Menu.
2. Touch [Utility].
3. Touch [Administrator Settings].
4. Enter the administrator password and touch [OK].
5. Enter the currently set HDD Lock Password twice.
6. Touch [OK].
7. When the screen that indicates the completion of setting of the HDD Lock Password appears, turn OFF and ON the main power switch.

(3) Performing HDD Physical Format

1. Call the Service Mode to the screen.
2. Touch these keys in this order: [State Confirmation] -> [Memory/HDD Adj.] -> [HDD Format].
3. Touch [Physical Format].
4. Press the Start key.
5. When Physical Format is completed, turn OFF and ON the main power switch.

14. TROUBLESHOOTING OF i-Option

14.1 Structure of license management

- The functions available with i-Option can be activated by entering “License code” to the MFP.
- License code is issued and controlled by License Management System (LMS).
  To prevent unauthorized use of the license code, each MFP is identified individually so that the license code cannot be activated unless it matches with the authorized MFP.

14.2 License management information

- Since license code needs to identify each MFP, it is issued using the serial number of MFP and “unique value” that is generated inside MFP.
- The “unique value” is stored to the memory region on the MFP board and at the same time some parts of it are memorized by SSD board. The activated function cannot be used unless the both figures conform.
  Since these figures are out of target of [Memory Data Backup], when any trouble occurs at either nonvolatile memory, “License Management Error” is generated due to discordance of the figures.

14.3 Error message

14.3.1 License management error

- When abnormal value is detected in the license management information that is stored to the MFP board or SSD board, or some values are detected cleared, warning is issued to let the user know the abnormality.
- The abnormality is detected at the timing of start-up or restart due to any condition.
- When the abnormality is detected, the corresponding i-Option function cannot be used, other ordinal functions, however, such as copy, scanning, print or etc, can be used without interruption. (Error message is displayed on the Service Mode screen.)

(1) Example of error message

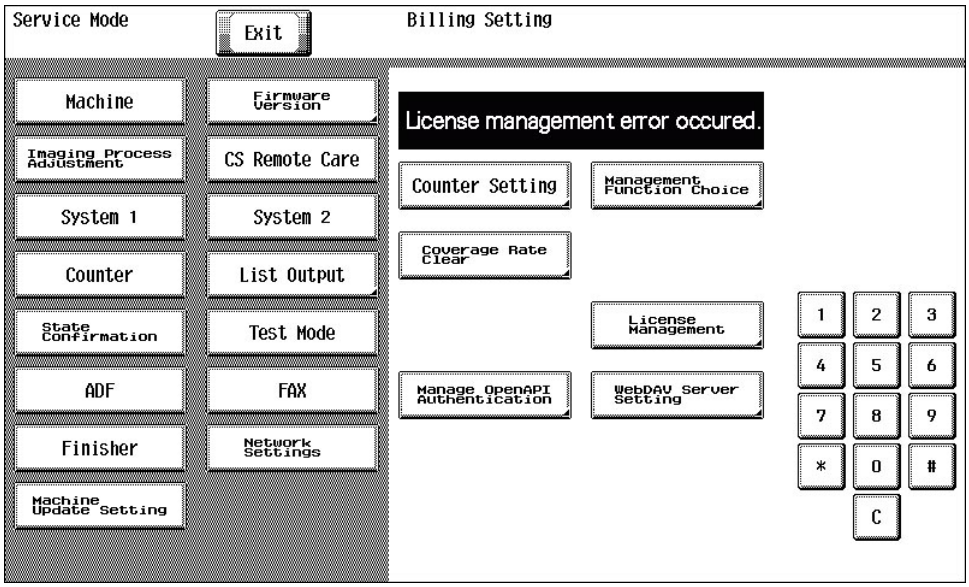

(2) Main reasons of trouble

- The following shows the possible trouble factors and their countermeasure.

Board replacement	Countermeasure
• When MFP board and SSD board are replaced with the new ones at the same time.	Install firmware, follow the setup procedure.
• When mounting the MFP board of the machine whose function(s) have already been activated and a new SSD board.	Install firmware, then restore the data using restore procedure.

15. IMAGE QUALITY PROBLEM

15.1 How to read element data

- As part of troubleshooting procedures, the numeric values set for “State Confirmation” available from “Service Mode” can be used to isolate the cause of the image problem.

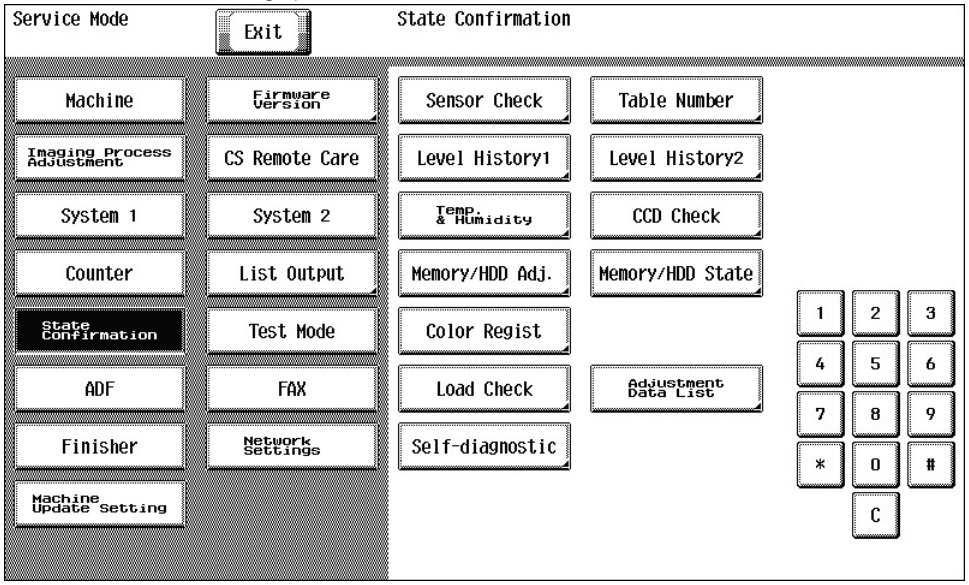

15.1.1 Table number

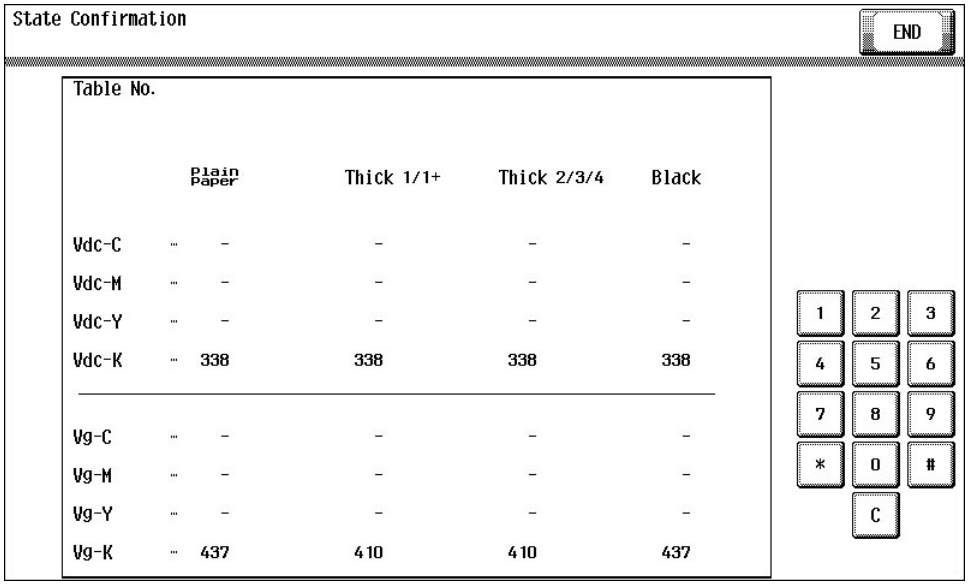

Vdc-C (not used) Vdc-M (not used) Vdc-Y (not used) Vdc-K	• Shows the developing bias value of toner when an image is produced. • Standard values: around 400 V (100 V to 800 V) • The specific numeric values vary with different developing units. (The values incorporate corrections to match the proper density after image stabilization.) * As a guide, the image density tends to be lower with large numeric values and higher with small numeric values. • Relevant components: Developing unit, drum unit, high voltage unit (HV)
Vg-C (not used) Vg-M (not used) Vg-Y (not used) Vg-K	• Shows the grid voltage value of each color of toner when an image is produced. • Standard values: around 500 V (200 V to 1200 V) • The specific numeric values vary with different developing units. (The values incorporate corrections to match the proper density after image stabilization.) * As a guide, the image density tends to be lower with large numeric values and higher with small numeric values. • Relevant components: Developing unit, drum unit, high voltage unit (HV)

15.1.2 Level history 1

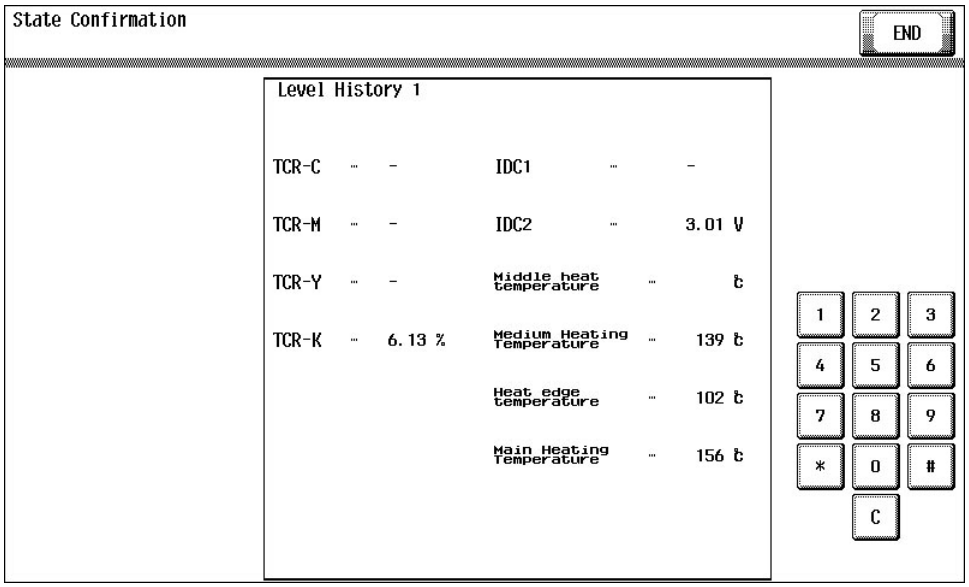

• TCR-C (not used) • TCR-M (not used) • TCR-Y (not used) • TCR-K	• Shows the T/C ratio (in 0.01 % increments). • Standard value: 6 to 8 % • Relevant components: TCR sensor
• IDC1 (not used) • IDC2	• Shows the IDC bare surface output value (in 0.01 V increments). • It should normally be around 3.0 V. • The output range is 0 V to 3.4 V. • Relevant components: IDC sensor, transfer belt unit
• Middle heat temperature (not used) • Medium Heating Temperature • Heat edge temperature • Main Heating Temperature	• Shows the temperature of the drum unit (in 1 °C increments). • Relevant components: Fusing unit

15.1.3 Level history 2

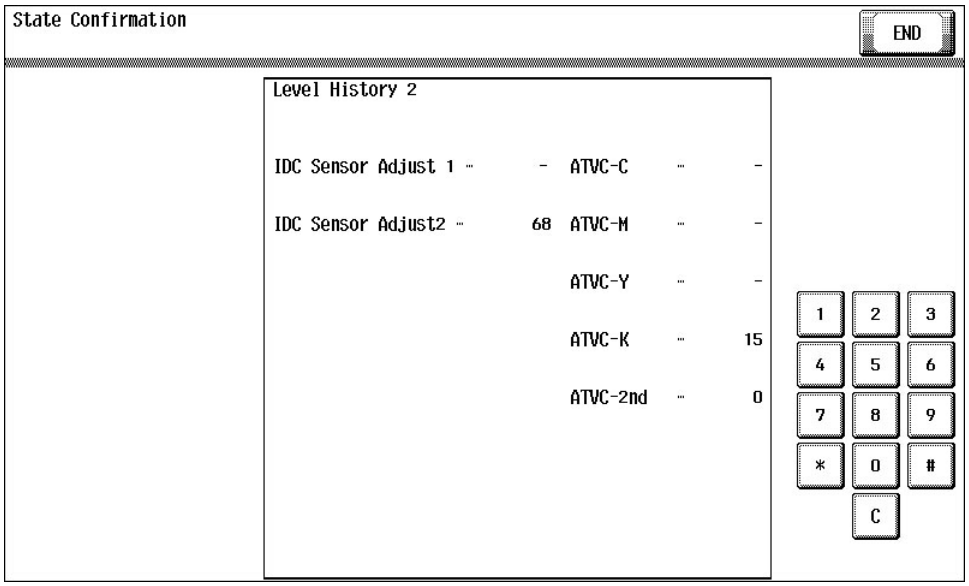

IDC Sensor Adjust 1 (not used) IDC Sensor Adjust 2	• Shows the IDC intensity adjustment value. • It should normally be around 70 and can range from 0 to 255. • The value becomes greater as the transfer belt unit has been used more. • Relevant components: IDC sensor, transfer belt unit
ATVC -C (not used) ATVC -M (not used) ATVC -Y (not used) ATVC -K ATVC -2nd	• Shows the latest ATVC level (which varies according to the paper type). • 10 µA to 100 µA (ATVC-K) • 300 V to 5000 V (ATVC-2nd) • Relevant components: Transfer belt unit, High voltage unit (HV), 2nd transfer roller

15.2 Troubleshooting procedure overview

15.2.1 Test pattern printing

- Following give an overview of a procedure to isolate a faulty spot of an image trouble using a test pattern.
- A faulty spot that is responsible for the image trouble is isolated by printing a test pattern to determine whether an image trouble is evident has the trouble.

(1) Scanner system image trouble

- If an image trouble occurs during a copy cycle, use the image trouble that may be evident on the test pattern printed to determine whether the trouble is attributable to the scanner system or the printer system.
- If no image trouble occurs on a test pattern produced following a print cycle, the image trouble is determined to be attributable to the scanner system.

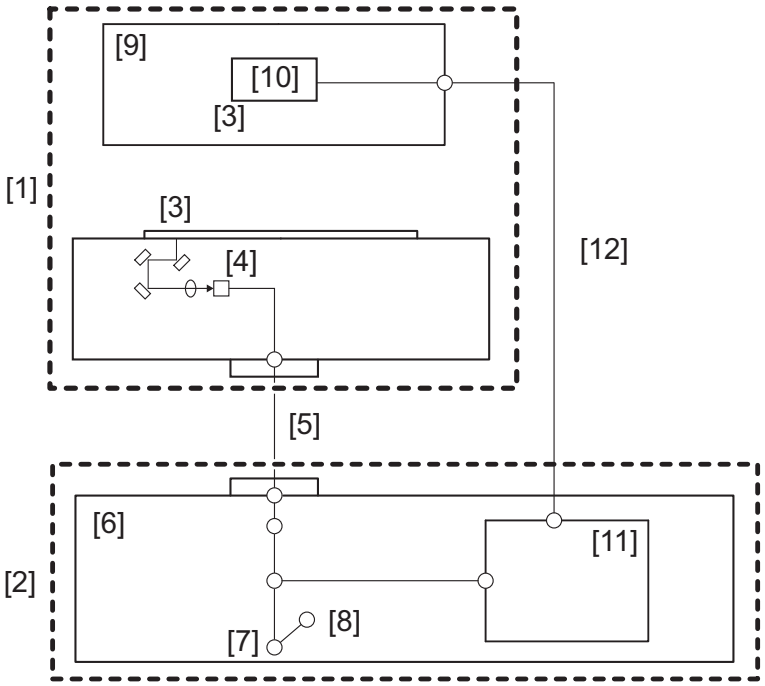

[1]	Scanner system	[2]	Printer system
[3]	Document scan	[4]	CCD board (CCDB)
[5]	I/F cable (when DF-624 is installed, only front side when DF-701 is installed)	[6]	MFP board (MFPB)
[7]	PH relay board (PHRYB)	[8]	Print output
[9]	DF-624/DF-701	[10]	CIS module (CIS)
[11]	Dual scan image processing board (DSIPB)	[12]	I/F cable (only rear side when DF-701 is installed)

15.2.2 Self-diagnostic function

Following give an overview of the self-diagnostic function.

- The self-diagnostic function makes a self-diagnosis of printed-wiring boards and electrical parts to determine whether they are fully operational.
- The self-diagnostic procedure is started as follows: select [Service Mode] -> [State Confirmation] -> [Self-diagnostic] -> [Check All]; then, press the start key.

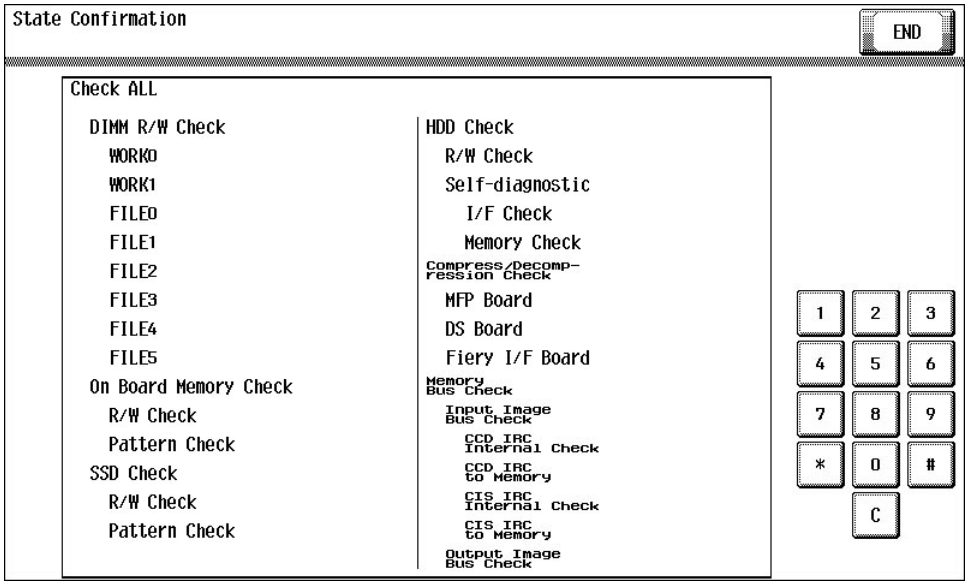

- When the self-diagnostic procedure is completed, "OK" or "NG" appears on the display.
- If "NG" appears, check the corresponding printed-wiring board for proper connector connection or replace a faulty board with a good one.

Check name	Cause of "NG" display	Corrective action
DIMM R/W Check	DIMM improperly installed, faulty DIMM, faulty CPU of MFP board	Reinstall the DIMM, replace the DIMM, replace the MFP board
On Board Memory Check	Faulty MFP board, run-down battery	Replace the MFP board
SSD Check	SSD board improperly installed, faulty SSD board, faulty MFP board	Reinstall the SSD board, replace the SSD board, replace the MFP board
HDD Check	Broken HDD cable, damaged HDD, faulty MFP board	Replace the HDD cable, replace the HDD, replace the MFP board
Compress/Decompression Check	Faulty MFP board, improperly connected dual scan image processing board (DSIPB)	Reinstall the dual scan image processing board, replace the dual scan image processing board, replace the MFP board
Memory Bus Check: Input image	Improperly connected connector among MFP board, CCD board, and CIS board, faulty CCD board, faulty CIS board, faulty MFP board	Replace the CCD board, replace the CIS board, replace the MFP board
Memory Bus Check: Output image	Improperly connected MFP board, faulty MFP board	Replace the MFP board

15.3 Corrective action procedure

15.3.1 Image trouble sample illustrations

NOTE

- **Sample illustrations schematically show exemplary image troubles that occur when the images are printed on A3-size paper.**
- **The arrow in the exemplary image troubles indicates the paper feeding direction.**

White line 1, White band 1



Black line 1, Black band 1



White line 2, White band 2



Black line 2, Black band 2

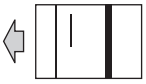

Uneven density 1

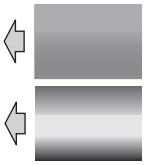

Uneven density 2

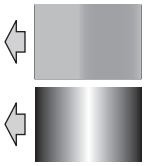

Faint image, Low image density



Gradation reproduction failure

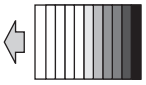

Foggy background

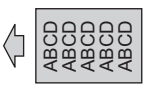

Void area



White spot



Black spot

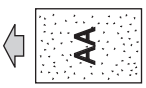

Blurred image



Back marking

Blank copy



Black copy



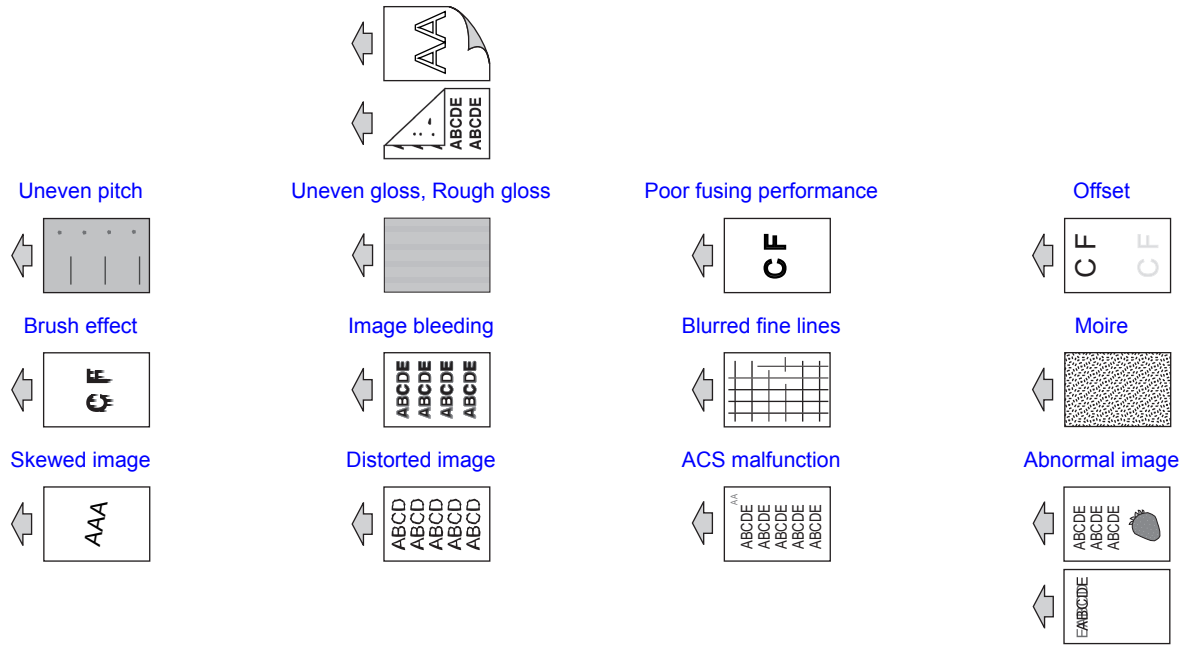

15.3.2 White line 1, White band 1, Black line 1, Black band 1

(1) Typical faulty images

The arrow in the exemplary image troubles indicates the paper feeding direction.

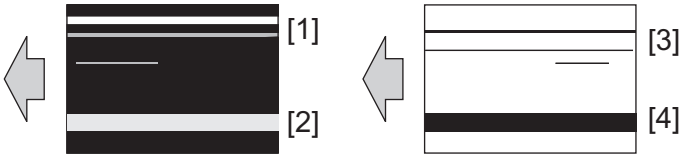

[1]	White line	[2]	White band
[3]	Black line	[4]	Black band

(2) Initial troubleshooting procedure

Step	Section	Check item	Result	Action
1	Paper Setting	The paper to be used for printing does not match the paper type and size of paper setting selected on the machine.	YES	Make the paper setting again on the machine.
2	Service Mode -> Stabilizer	Select [Service Mode] -> [Imaging Process Adjustment] -> [Stabilizer] -> [Stabilization Only] and the image trouble is eliminated.	NO	Go to the next step.
3	Service Mode -> Gradation Adjust	Select [Service Mode] -> [Imaging Process Adjustment] -> [Gradation Adjust] and the image trouble is eliminated.	NO	Go to the next step.
4	Image check	• Select [Service Mode] -> [Test Mode] -> [Halftone Pattern]. Select "SINGLE", "HYPER", "Gradation", "1-Sided", "Black(1PC)", and "Full Bleed", enter "64" for Density, and load tray 2 with A3 paper. Press the start key. This runs a print cycle. • Check the image after printing and the abnormal image is evident.	YES	Go to engine troubleshooting procedure.
			NO	Go to scanner troubleshooting procedure.

(3) Engine troubleshooting procedure

Step	Section	Check item	Result	Action
1	Service Mode -> Table Number	Select [Service Mode] -> [State Confirmation] -> [Table Number]. The measured value is close to the standard value. • Developing bias: Vdc-K: close to the standard value of 400 V (100 V to 800 V) • Grid voltage: Vg-K: close to the standard value of 500 V (200 V to 1200 V)	NO	• Check the high voltage unit, developing unit, and the drum unit for wiring and connection. • Replace the high voltage unit.
2	Write section	Sharp white line or black line is blurry.	YES	Clean the PH window.
3	Charging section	There is dirty or foreign matter on charge corona.	YES	• Clean the comb electrode.

Step	Section	Check item	Result	Action
				• Clean the charge corona control plate.
4	Photo conductor section	There is a positive contact between the drum charge corona bias application terminals and the high voltage unit connection terminals (C1).	NO	Clean or correct the terminal.
5	Developing section	There is a positive contact between the developing bias application terminals and the high voltage unit connection terminals (B1).	NO	Clean or correct the terminal.
6	Photo conductor section	Scratches on photo conductor.	YES	• Clean. • Replace the drum unit.
7	Photo conductor section	Toner line or dirt on photo conductor. (improper cleaning)	YES	Replace the drum unit.
8	1st transfer section	There is a positive contact between the transfer belt application terminals and the high voltage unit connection terminals (T1-1).	NO	Clean or correct the terminal.
9	1st transfer section	Scratches or dirt on 1st transfer roller.	YES	• Clean. • Replace the transfer belt unit.
10	Developing section	Toner bristles not even on the developing roller, resulting in a line or band.	YES	Replace the developing unit.
11	Paper path	There is dirty or foreign matter on paper path.	YES	Check and clean the paper path including the duplex section.
12	Transfer belt unit	Lines that can be removed by cleaning are evident on the transfer belt. (improper cleaning)	YES	• Check and clean the cleaning blade. • Replace the transfer belt unit.
13	Transfer belt unit	Dirt, scratches, or foreign matter on the transfer belt.	YES	• Clean. • Replace the transfer belt unit.
14	2nd transfer section	Dirt, scratches, or foreign matter on the 2nd transfer roller.	YES	• Clean. • Replace the transfer roller unit.
15	2nd transfer section	There is a positive contact between the application terminals of the 2nd transfer and the connection terminals (T2, E) and ground terminal of the high voltage unit.	NO	Clean or correct the terminal.
16	Fusing unit	There is dirty or foreign matter on paper path of fusing unit.	YES	Clean. (Disassembling the fusing unit is prohibited.)
17	Fusing unit	Scratches on belt and roller in fusing unit.	YES	Replace the fusing unit
			NO	• Replace the PH unit. • Replace the high voltage unit. • Replace the printer control board.

(4) Scanner troubleshooting procedure

Step	Section	Check item	Result	Action
1	Original	Original is damaged or dirty.	YES	Change original.
2	When original glass is being used	A fault occurs in the image read through the original glass.	YES	Go to step 6.
3	When DF-701/DF-624 is being used: 1st side	A fault occurs in the image read from the 1st side while DF is being used.	YES	Go to step 11.
4	When DF-624 is being used: 2nd side	A fault occurs in the image read from the 2nd side while DF-624 is being used.	YES	Go to step 11.
5	When DF-701 is being used: 2nd side	A fault occurs in the image read from the 2nd side while DF-701 is being used.	YES	Go to step 18.
Main body side_original glass				
6	DF side_ Original pad	Original pad of DF is dirty.	YES	Clean.
7	Original glass	Original glass is dirty.	YES	Clean.
8	Shading sheet	Shading sheet is dirty.	YES	Clean.
9	End face of original is reproduced as a line	Select [Service Mode] -> [Machine] -> [Scan Area] -> [Scanner Image Side Edge] and make the necessary adjustment, and the image trouble is eliminated.	NO	Go to the next step.
10	Parts along scanning path	Mirror, lens, light guide or reflectors is dirty.	YES	Clean.
			NO	• Replace the LED exposure unit. • Replace the CCD board.
Main body side_DF original reading section				
11	Main body side_reading section	Slit glass of main body is dirty.	YES	Clean.
12	DF side_ document reading glass cleaning brush	Document reading glass cleaning brush of DF is dirty.	YES	Clean.

Step	Section	Check item	Result	Action
13	Main body side_shading sheet	Shading sheet of main body is dirty.	YES	Clean.
14	When DF-701/DF-624 is being used: 1st side: end face of original is reproduced as a line	Select [Service Mode] -> [ADF] -> [Original Stop Position] -> [Sub Scanning Direction 1-Side] and make the necessary adjustment, and the image trouble is eliminated.	NO	Go to the next step.
15	When DF-624 is being used: 2nd side: end face of original is reproduced as a line	Select [Service Mode] -> [ADF] -> [Original Stop Position] -> [Sub Scanning Direction 2-Side] and make the necessary adjustment, and the image trouble is eliminated.	NO	Go to the next step.
16	Service Mode -> Read Pos Adj	Select [Service Mode] -> [ADF] -> [Read Pos Adj] -> [Auto Adjust] and the image trouble is eliminated.	NO	Go to the next step.
17	Parts along scanning path	Mirror, lens, light guide or reflectors is dirty.	YES	Clean.
			NO	• Replace the LED exposure unit. • Replace the CCD board.
DF-701 side_original reading section				
18	CIS glass cleaning	CIS glass is dirty.	YES	Clean.
19	CIS reading section	CIS reading section is dirty.	YES	Clean.
20	CIS cleaning brush	CIS cleaning brush is dirty.	YES	Clean.
21	Shading sheet	Shading sheet is dirty.	YES	Clean.
22	When DF-701 is being used: 2nd side: end face of original is reproduced as a line	Select [Service Mode] -> [ADF] -> [Original Stop Position] -> [Sub Scanning Direction 2-Side] and make the necessary adjustment, and the image trouble is eliminated.	NO	Go to the next step.
23	When DF-701 is being used: 2nd side: Home Read Position	Select [Service Mode] -> [ADF] -> [Home Read Position Adjust] and make the necessary adjustment, and the image trouble is eliminated.	NO	Go to the next step.
24	Reading section	CIS reading section is dirty.	YES	Clean.
			NO	Replace the CIS module.

15.3.3 White line 2, White band 2, Black line 2, Black band 2

(1) Typical faulty images

The arrow in the exemplary image troubles indicates the paper feeding direction.

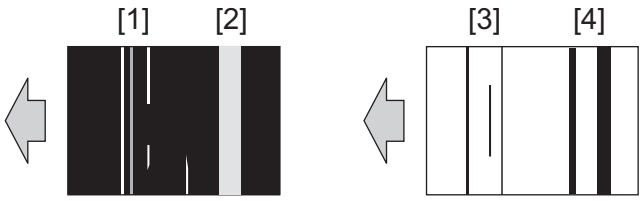

[1]	White line	[2]	White band
[3]	Black line	[4]	Black band

(2) Initial troubleshooting procedure

Step	Section	Check item	Result	Action
1	Paper Setting	The paper to be used for printing does not match the paper type and size of paper setting selected on the machine.	YES	Make the paper setting again on the machine.
2	Service Mode -> Stabilizer	Select [Service Mode] -> [Imaging Process Adjustment] -> [Stabilizer] -> [Stabilization Only] and the image trouble is eliminated.	NO	Go to the next step.
3	Service Mode -> Gradation Adjust	Select [Service Mode] -> [Imaging Process Adjustment] -> [Gradation Adjust] and the image trouble is eliminated.	NO	Go to the next step.
4	Image check	• Select [Service Mode] -> [Test Mode] -> [Halftone Pattern]. Select "SINGLE", "HYPER", "Gradation", "1-Sided", "Black(1PC)", and "Full Bleed", enter "64" for Density, and load tray 2 with A3 paper. Press the start key. This runs a print cycle. • Check the image after printing and the abnormal image is evident.	YES	Go to engine troubleshooting procedure.
			NO	Go to scanner troubleshooting procedure.

(3) Engine troubleshooting procedure

Step	Section	Check item	Result	Action
1	Service Mode -> Table Number	Select [Service Mode] -> [State Confirmation] -> [Table Number]. The measured value is close to the standard value. • Developing bias: Vdc-K: close to the standard value of 400 V (100 V to 800 V) • Grid voltage: Vg-K: close to the standard value of 500 V (200 V to 1200 V)	NO	• Check the high voltage unit, developing unit, and the drum unit for wiring and connection. • Replace the high voltage unit.
2	Write section	Sharp white line or black line are blurry	YES	Clean the PH window.
3	Charging section	There is dirty or foreign matter on charge corona.	YES	• Clean the comb electrode. • Clean the charge corona control plate.
4	Photo conductor section	There is a positive contact between the drum charge corona bias application terminals and the high voltage unit connection terminals (C1).	NO	Clean or correct the terminal.
5	Developing section	There is a positive contact between the developing bias application terminals and the high voltage unit connection terminals (B1).	NO	Clean or correct the terminal.
6	Photo conductor section	Scratches on photo conductor.	YES	• Clean. • Replace the drum unit.
7	Photo conductor section	Toner line or dirt on photo conductor. (improper cleaning)	YES	Replace the drum unit.
8	1st transfer section	There is a positive contact between the transfer belt application terminals and the high voltage unit connection terminals (T1-1).	NO	Clean or correct the terminal.
9	1st transfer section	Scratches or dirt on 1st transfer roller.	YES	• Clean. • Replace the transfer belt unit.
10	Developing section	Toner bristles not even on the developing roller, resulting in a line or band.	YES	Replace the developing unit.
11	Paper path	There is dirty or foreign matter on paper path.	YES	Check and clean the paper path including the duplex section.
12	Transfer belt unit	Lines that can be removed by cleaning are evident on the transfer belt. (improper cleaning)	YES	• Check and clean the cleaning blade. • Replace the transfer belt unit.
13	Transfer belt unit	Dirt, scratches, or foreign matter on the transfer belt.	YES	• Clean. • Replace the transfer belt unit.
14	2nd transfer section	Dirt, scratches, or foreign matter on the 2nd transfer roller.	YES	• Clean. • Replace the transfer roller unit.
15	2nd transfer section	There is a positive contact between the application terminals of the 2nd transfer and the connection terminals (T2, E) and ground terminal of the high voltage unit.	NO	Clean or correct the terminal.
16	Fusing unit	Dirt or foreign matter on paper path or separation claw of the fusing unit.	YES	Clean. (Disassembling the fusing unit is prohibited.)
17	Fusing unit	Scratches on belt and roller in fusing unit.	YES	Replace the fusing unit
			NO	• Replace the PH unit. • Replace the high voltage unit. • Replace the printer control board.

(4) Scanner troubleshooting procedure

Step	Section	Check item	Result	Action
1	Original	Original is damaged or dirty.	YES	Change original.
2	Original Type	Select [Copy setting] -> [Original Type] and change the setting, and the image trouble is eliminated.	YES	Correct the setting.
3	When original glass is being used: Service Mode -> Scan Area	Select [Service Mode] -> [Machine] -> [Scan Area] -> [Scanner Image Side Edge] and make the necessary adjustment, and the image trouble is eliminated.	NO	Go to the next step.
4	When original glass is being used	Original glass or original pad is dirty.	YES	Clean.
			NO	Replace the CCD board.
5	When DF is being used: 2nd side: End face of original is reproduced as a line	Select [Service Mode] -> [ADF] -> [Auto Stop Position Adjustment] -> [Main Scanning (Front)] and the image trouble is eliminated.	NO	Go to the next step.
6	When DF is being used: 2nd side: End face of original is reproduced as a line	Select [Service Mode] -> [ADF] -> [Auto Stop Position Adjustment] -> [Main Scanning (Back)] and the image trouble is eliminated.	NO	Go to the next step.
7	• When DF-701/DF-624 is being used: 1st side	Slit glass or document reading glass cleaning brush is dirty.	YES	Clean.

Step	Section	Check item	Result	Action
	• When DF-624 is being used: 2nd side		NO	Replace the CCD board.
8	When DF-701 is being used: 2nd side	CIS glass or CIS cleaning brush is dirty.	YES	Clean.
			NO	Replace the CIS module.

15.3.4 Uneven density 1

(1) Typical faulty images

The arrow in the exemplary image troubles indicates the paper feeding direction.

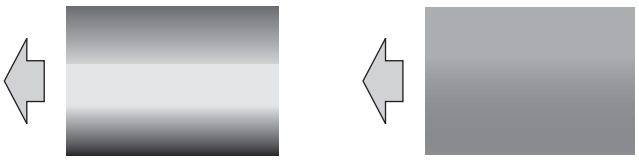

(2) Troubleshooting procedure

Step	Section	Check item	Result	Action
1	Paper Setting	The paper to be used for printing does not match the paper type and size of paper setting selected on the machine.	YES	Make the paper setting again on the machine.
2	IDC sensor	• IDC sensor is dirty. • IDC sensor shutter does not operate properly.	YES	• Clean. • Clean or correct the IDC sensor shutter.
3	Service Mode -> Stabilizer	Select [Service Mode] -> [Imaging Process Adjustment] -> [Stabilizer] -> [Stabilization Only] and the image trouble is eliminated.	NO	Go to the next step.
4	Service Mode -> Gradation Adjust	Select [Service Mode] -> [Imaging Process Adjustment] -> [Gradation Adjust] and the image trouble is eliminated.	NO	Go to the next step.
5	Image check	• Select [Service Mode] -> [Test Mode] -> [Halftone Pattern]. Select "SINGLE", "HYPER", "Gradation", "1-Sided", "Black(1PC)", and "Full Bleed", enter "64" for Density, and load tray 2 with A3 paper. Press the start key. This runs a print cycle. • Check the image after printing and the abnormal image is evident.	YES	Go to the next step.
6	High image density original	Uneven density in sub scan direction occurs at a pitch of 40 mm to 50 mm when a multi-copy cycle is run using an original with high image density (50% or more).	YES	Feed 10 to 20 blank sheets of paper with no originals placed, as the developing unit fails to keep up with a high demand for toner.
7	Service Mode -> LD 1/2 Balance Adj.	Select [Service Mode] -> [Machine] -> [LD adjustment] -> [LD 1/2 Balance Adj.] and the image trouble is eliminated.	NO	Go to the next step.
8	Service Mode -> TCR Level Setting	Select [Service Mode] -> [Imaging Process Adjustment] -> [TCR Level Setting] and make the necessary adjustment, and the image trouble is eliminated.	NO	Go to the next step.
9	Write section	Dirt or foreign matter on the dust-proof glass of the PH	YES	Clean the PH window.
10	Charging section	There is dirty or foreign matter on charge corona.	YES	• Clean the comb electrode. • Clean the charge corona control plate.
11	Photo conductor section	Dirt, scratches, or foreign matter on the photo conductor.	YES	• Clean. Replace the drum unit.
12	1st transfer section	Dirt, scratches, or foreign matter on the 1st transfer roller.	YES	• Clean. • Replace the transfer belt unit.
13	1st transfer section	Faulty pressure/retraction operation of the 1st transfer roller.	YES	• Correct or replace the drive system. • Replace the transfer belt unit.
14	Developing section	Toper hopper operates improperly or contains foreign matter.	YES	• Correct or remove. • Replace the toner hopper.
15	Developing section	Toner bristles not even on the developing roller, resulting in a line or band.	YES	Replace the developing unit.
16	Paper path	There is dirty or foreign matter on paper path.	YES	Check and clean the paper path including the duplex section.
17	Transfer belt unit	Lines that can be removed by cleaning are evident on the transfer belt. (improper cleaning)	YES	• Check and clean the cleaning blade. • Replace the transfer belt unit.
18	Transfer belt unit	Dirt, scratches, or foreign matter on the transfer belt.	YES	• Clean. • Replace the transfer belt unit.

Step	Section	Check item	Result	Action
19	Transfer belt unit	There is a positive contact between the transfer belt application terminals and the high voltage unit connection terminals (T1-1).	NO	Clean or correct the terminal.
20	Transfer belt unit	Transfer belt rotates faultily.	YES	Replace the transfer belt unit.
21	2nd transfer section	Dirt, scratches, or foreign matter on the 2nd transfer roller.	YES	• Clean. • Replace the transfer roller unit.
22	2nd transfer section	Faulty pressure/retraction operation of the 2nd transfer roller.	YES	• Correct. • Replace the transfer roller unit.
23	2nd transfer section	There is a positive contact between the application terminals of the 2nd transfer roller and the connection terminals (T2, E) and ground terminal of the high voltage unit.	NO	Clean or correct the terminal.
24	Fusing unit	There is dirty or foreign matter on paper path of fusing unit.	YES	Clean. (Disassembling the fusing unit is prohibited.)
25	Service Mode -> Initialize + Image Stabilization	Select [Service Mode] -> [Imaging Process Adjustment] -> [Stabilizer] -> [Initialize + Image Stabilization] and [Gradation Adjust], and the image trouble is eliminated.	YES	Readjust.
			NO	• Replace the PH unit. • Replace the fusing unit. • Replace the high voltage unit. • Replace the printer control board.

15.3.5 Uneven density 2

(1) Typical faulty images

The arrow in the exemplary image troubles indicates the paper feeding direction.

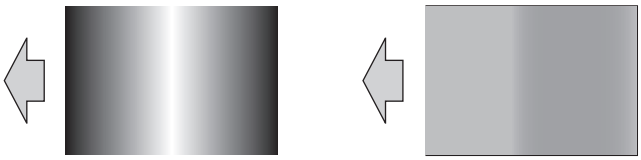

(2) Troubleshooting procedure

Step	Section	Check item	Result	Action
1	Paper Setting	The paper to be used for printing does not match the paper type and size of paper setting selected on the machine.	YES	Make the paper setting again on the machine.
2	IDC sensor	• IDC sensor is dirty. • IDC sensor shutter does not operate properly.	YES	• Clean. • Clean or correct the IDC sensor shutter.
3	Service Mode -> Stabilizer	Select [Service Mode] -> [Imaging Process Adjustment] -> [Stabilizer] -> [Stabilization Only] and the image trouble is eliminated.	NO	Go to the next step.
4	Service Mode -> Gradation Adjust	Select [Service Mode] -> [Imaging Process Adjustment] -> [Gradation Adjust] and the image trouble is eliminated.	NO	Go to the next step.
5	Image check	• Select [Service Mode] -> [Test Mode] -> [Halftone Pattern]. Select "SINGLE", "HYPER", "Gradation", "1-Sided", "Black(1PC)", and "Full Bleed", enter "64" for Density, and load tray 2 with A3 paper. Press the start key. This runs a print cycle. • Check the image after printing and the abnormal image is evident.	YES	Go to the next step.
6	Service Mode -> LD 1/2 Balance Adj.	Select [Service Mode] -> [Machine] -> [LD adjustment] -> [LD 1/2 Balance Adj.] and the image trouble is eliminated.	YES	Readjust.
7	Write section	Dirt or foreign matter on the dust-proof glass of the PH.	YES	Clean the PH window.
8	Charging section	There is dirty or foreign matter on charge corona.	YES	• Clean the comb electrode. • Clean the charge corona control plate.
9	Photo conductor section	Dirt, scratches, or foreign matter on the photo conductor.	YES	• Clean. • Replace the drum unit.
10	Photo conductor section	Photo conductor drives faultily.	YES	• Correct. • Replace the drum unit.
11	1st transfer section	Scratches or dirt on 1st transfer roller.	YES	• Clean. • Replace the transfer belt unit.
12	Developing section	Toner bristles not even on the developing roller, resulting in a line or band.	YES	Replace the developing unit.

Step	Section	Check item	Result	Action
13	Paper path	There is dirty or foreign matter on paper path.	YES	Check and clean the paper path including the duplex section.
14	Transfer belt unit	Dirt, scratches, or foreign matter on the transfer belt.	YES	• Clean. • Replace the transfer belt unit.
15	Transfer belt unit	There is a positive contact between the transfer belt application terminals and the high voltage unit connection terminals (T1-1).	NO	Clean or correct the terminal.
16	Transfer belt unit	Transfer belt rotates faultily.	YES	• Correct. • Replace the transfer belt unit.
17	2nd transfer section	Dirt, scratches, or foreign matter on the 2nd transfer roller.	YES	• Clean. • Replace the transfer roller unit.
18	2nd transfer section	Faulty pressure/retraction operation of the 2nd transfer roller.	YES	• Correct. • Replace the transfer roller unit.
19	2nd transfer section	There is a positive contact between the application terminals of the 2nd transfer roller and the connection terminals (T2, E) and ground terminal of the high voltage unit.	NO	Clean or correct the terminal.
20	Fusing unit	There is dirty or foreign matter on paper path of fusing unit.	YES	Clean. (Disassembling the fusing unit is prohibited.)
21	Service Mode -> Initialize + Image Stabilization	Select [Service Mode] -> [Imaging Process Adjustment] -> [Stabilizer] -> [Initialize + Image Stabilization] and [Gradation Adjust], and the image trouble is eliminated.	YES	Readjust.
			NO	• Replace the PH unit. • Replace the fusing unit. • Replace the high voltage unit. • Replace the printer control board.

(3) 4-color troubleshooting procedure

Step	Section	Check item	Result	Action
1	Paper path	There is dirty or foreign matter on paper path.	YES	Check and clean the paper path including the duplex section.
2	Transfer belt unit	Dirt, scratches, or foreign matter on the transfer belt.	YES	• Clean. • Replace the transfer belt unit.
3	Transfer belt unit	There is a positive contact between the transfer belt application terminals and the high voltage unit connection terminals (Y: T1-4; M: T1-3; C: T1-2; K: T1-1).	NO	Clean or correct the terminal.
4	Transfer belt unit	Transfer belt rotates faultily.	YES	• Correct. • Replace the transfer belt unit.
5	2nd transfer section	Dirt, scratches, or foreign matter on the 2nd transfer roller.	YES	• Clean. • Replace the transfer roller unit.
6	2nd transfer section	Faulty pressure/retraction operation of the 2nd transfer roller.	YES	• Correct. • Replace the transfer roller unit.
7	2nd transfer section	There is a positive contact between the application terminals of the 2nd transfer roller and the connection terminals (T2, E) and ground terminal of the high voltage unit.	NO	Clean or correct the terminal.
8	Fusing unit	There is dirty or foreign matter on paper path of fusing unit.	YES	Clean. (Disassembling the fusing unit is prohibited.)
9	Service Mode -> Initialize + Image Stabilization	Select [Service Mode] -> [Imaging Process Adjustment] -> [Stabilizer] -> [Initialize + Image Stabilization] and [Gradation Adjust], and the image trouble is eliminated.	YES	Readjust.
			NO	• Replace the fusing unit. • Replace the high voltage unit. • Replace the printer control board.

15.3.6 Faint image, low image density (ID lowering)

(1) Typical faulty images

The arrow in the exemplary image troubles indicates the paper feeding direction.



(2) Initial troubleshooting procedure

Step	Section	Check item	Result	Action

1	Malfunction code	The maintenance call mark is displayed on the panel.	YES	Perform the relevant troubleshooting procedure corresponding to the malfunction code.
2	Paper Setting	The paper to be used for printing does not match the paper type and size of paper setting selected on the machine.	YES	Make the paper setting again on the machine.
3	Damp paper	Paper is damp.	YES	Change paper to one just unwrapped from its package.
4	IDC sensor	• IDC sensor is dirty. • IDC sensor shutter does not operate properly.	YES	• Clean. • Clean or correct the IDC sensor shutter.
5	Service Mode -> Stabilizer	Select [Service Mode] -> [Imaging Process Adjustment] -> [Stabilizer] -> [Stabilization Only] and the image trouble is eliminated.	NO	Go to the next step.
6	Service Mode -> Gradation Adjust	Select [Service Mode] -> [Imaging Process Adjustment] -> [Gradation Adjust] and the image trouble is eliminated.	NO	Go to the next step.
7	Image check	• Select [Service Mode] -> [Test Mode] -> [Gradation Pattern]. Select "SINGLE", "HYPER", "Gradation", "1-Sided", "Black(1PC)", "Full Bleed", and "12 gradations", and load tray 2 with A3 paper. Press the start key. This runs a print cycle. • Check the image after printing and the abnormal image is evident.	YES	Go to engine troubleshooting procedure.
			NO	Go to scanner troubleshooting procedure.

(3) Engine troubleshooting procedure

Step	Section	Check item	Result	Action
1	Write section	Dirt or foreign matter on the dust-proof glass of the PH.	YES	Clean the PH window.
2	Charging section	There is dirty or foreign matter on charge corona.	YES	• Clean the comb electrode. • Clean the charge corona control plate.
3	Service Mode -> Table Number	Select [Service Mode] -> [State Confirmation] -> [Table Number]. The measured value is close to the standard value. • Developing bias: Vdc-K: close to the standard value of 400 V (100 V to 800 V) • Grid voltage: Vg-K: close to the standard value of 500 V (200 V to 1200 V)	NO	• Check the high voltage unit, developing unit, and the drum unit for wiring and connection. • Replace the high voltage unit.
4	Photo conductor section	There is a positive contact between the drum charge corona bias application terminals and the high voltage unit connection terminals (C1).	NO	Clean or correct the terminal.
5	Developing section	There is a positive contact between the developing bias application terminals and the high voltage unit connection terminals (B1).	NO	Clean or correct the terminal.
6	Hopper drive unit section	Faulty connector connection between the toner supply motor (M6) and printer control board (CN14).	YES	Reconnect the connector.
7	Hopper drive unit section	Faulty in the drive of sub hopper.	YES	• Correct. • Replace the hopper drive unit.
8	Transfer belt unit	There is a positive contact between the transfer belt application terminals and the high voltage unit connection terminals (T1-1).	NO	Clean or correct the terminal.
9	2nd transfer section	There is a positive contact between the application terminals of the 2nd transfer roller and the connection terminals (T2, E) and ground terminal of the high voltage unit.	NO	Clean or correct the terminal.
10	Service Mode -> TCR data	Select [Service Mode] -> [State Confirmation] -> [Level History 1] and the measured value is correct. TCR-K: normal value 6 to 8 %	NO	Select [Service Mode] -> [Imaging Process Adjustment] -> [Manual Toner Add] and perform the function.
11	Service Mode -> Max Image Density Adj	Select [Service Mode] -> [Imaging Process Adjustment] -> [Max Image Density Adj] and make the necessary adjustment, and the image trouble is eliminated.	NO	Go to the next step.
12	Service Mode -> Initialize + Image Stabilization	Select [Service Mode] -> [Imaging Process Adjustment] -> [Stabilizer] -> [Initialize + Image Stabilization] and [Gradation Adjust], and the image trouble is eliminated.	YES	Readjust.
			NO	• Replace the drum unit. • Replace the developing unit. • Replace the PH unit. • Replace the high voltage unit. • Replace the printer control board.

(4) Scanner troubleshooting procedure

Step	Section	Check item	Result	Action
1	Original Type	Select [Copy setting] -> [Original Type] and change the setting, and the image trouble is eliminated.	YES	Correct the setting.
2	When original glass is being used	Original glass or original pad is dirty.	YES	Clean.
3	Parts along scanning path	Mirror, lens, light guide or reflectors is dirty.	YES	Clean.
4	Main body side_shading sheet	Shading sheet of main body is dirty.	YES	Clean.
			NO	• Replace the LED exposure unit. • Replace the CCD board.
5	• When DF-701/DF-624 is being used: 1st side • When DF-624 is being used: 2nd side	Slit glass or document reading glass cleaning brush is dirty.	YES	Clean.
			NO	• Replace the LED exposure unit. • Replace the CCD board.
6	When DF-701 is being used: 2nd side	• Shading correction surface of DF-701 is dirty. • CIS glass or CIS cleaning brush is dirty.	YES	Clean.
			NO	Replace the CIS module.

15.3.7 Gradation reproduction failure

(1) Typical faulty images

The arrow in the exemplary image troubles indicates the paper feeding direction.

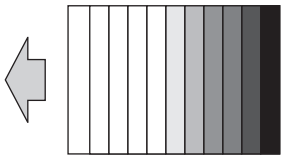

(2) Troubleshooting procedure

Step	Section	Check item	Result	Action
1	Malfunction code	The maintenance call mark is displayed on the panel.	YES	Perform the relevant troubleshooting procedure corresponding to the malfunction code.
2	Paper Setting	The paper to be used for printing does not match the paper type and size of paper setting selected on the machine.	YES	Make the paper setting again on the machine.
3	Image check	• Select [Service Mode] -> [Test Mode] -> [Gradation Pattern]. Select "SINGLE", "HYPER", "Gradation", "1-Sided", "Black(1PC)", and "12 gradations ", and load tray 2 with A3 paper. Press the start key. This runs a print cycle. • Check the image after printing and the abnormal image is evident.	-	Go to the next step.
4	Write section	Dirt or foreign matter on the dust-proof glass of the PH.	YES	Clean the PH window.
5	Charging section	Dirt or foreign matter on the charge corona.	YES	• Clean the comb electrode. • Clean the charge corona control plate.
6	IDC sensor	• IDC sensor is dirty. • IDC sensor shutter does not operate properly.	YES	• Clean. • Clean or correct the IDC sensor shutter.
7	Service Mode -> Stabilizer	Select [Service Mode] -> [Imaging Process Adjustment] -> [Stabilizer] -> [Stabilization Only] and the image trouble is eliminated.	NO	Go to the next step.
8	Service Mode -> Gradation Adjust	Select [Service Mode] -> [Imaging Process Adjustment] -> [Gradation Adjust] and the image trouble is eliminated.	NO	Go to the next step.
9	Service Mode -> Max Image Density Adj	Select [Service Mode] -> [Imaging Process Adjustment] -> [Max Image Density Adj] and make the necessary adjustment, and the image trouble is eliminated.	NO	Go to the next step.
10	Service Mode -> Initialize + Image Stabilization	Select [Service Mode] -> [Imaging Process Adjustment] -> [Stabilizer] -> [Initialize + Image Stabilization] and [Gradation Adjust], and the image trouble is eliminated.	YES	Readjust.
			NO	• Replace the drum unit. • Replace the developing unit. • Replace the PH unit. • Replace the high voltage unit. • Replace the printer control board. • Replace the MFP board.

15.3.8 Foggy background

(1) Typical faulty images

The arrow in the exemplary image troubles indicates the paper feeding direction.

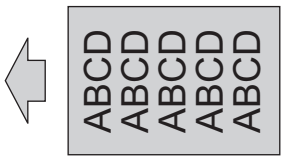

(2) Initial troubleshooting procedure

Step	Section	Check item	Result	Action
1	Malfunction code	The maintenance call mark is displayed on the panel.	YES	Perform the relevant troubleshooting procedure corresponding to the malfunction code.
2	Paper Setting	The paper to be used for printing does not match the paper type and size of paper setting selected on the machine.	YES	Make the paper setting again on the machine.
3	Damp paper	Paper is damp.	YES	Change paper to one just unwrapped from its package.
4	IDC sensor	• IDC sensor is dirty. • IDC sensor shutter does not operate properly.	YES	• Clean. • Clean or correct the IDC sensor shutter.
5	Service Mode -> Stabilizer	Select [Service Mode] -> [Imaging Process Adjustment] -> [Stabilizer] -> [Stabilization Only] and the image trouble is eliminated.	NO	Go to the next step.
6	Service Mode -> Gradation Adjust	Select [Service Mode] -> [Imaging Process Adjustment] -> [Gradation Adjust] and the image trouble is eliminated.	NO	Go to the next step.
7	Service Mode -> Image Background Adj	Select [Service Mode] -> [Imaging Process Adjustment] -> [Image Background Adj] and [Stabilizer] and the image trouble is eliminated.	NO	Go to the next step.
8	Image check	• Select [Service Mode] -> [Test Mode] -> [Lattice Pattern]. Select "SINGLE", "HYPER", "Gradation", "1-Sided", "Black(1PC)", "600dpi", and "Normal", enter "20" for CD width, "20" for FD width, and "64" for Density, and load tray 2 with A3 paper. Press the start key. This runs a print cycle. • Check the image after printing and the abnormal image is evident.	YES	Go to engine troubleshooting procedure.
			NO	Go to scanner troubleshooting procedure.

(3) Engine troubleshooting procedure

Step	Section	Check item	Result	Action
1	Write section	Dirt or foreign matter on the dust-proof glass of the PH.	YES	Clean the PH window.
2	Charging section	There is dirty or foreign matter on charge corona.	YES	• Clean the comb electrode. • Clean the charge corona control plate.
3	Photo conductor section	There is a positive contact between the drum charge corona bias application terminals and the high voltage unit connection terminals (C1).	NO	Clean or correct the terminal.
4	Developing section	There is a positive contact between the developing bias application terminals and the high voltage unit connection terminals (B1).	NO	Clean or correct the terminal.
5	Transfer belt unit	There is a positive contact between the transfer belt application terminals and the high voltage unit connection terminals (T1-1).	NO	Clean or correct the terminal.
6	2nd transfer section	There is a positive contact between the application terminals of the 2nd transfer roller and the connection terminals (T2, E) and ground terminal of the high voltage unit.	NO	Clean or correct the terminal.
7	Service Mode -> TCR data	Select [Service Mode] -> [State Confirmation] -> [Level History 1] and the measured value is correct. TCR-K: normal value 6 to 8 %	NO	Select [Service Mode] -> [Imaging Process Adjustment] -> [Manual Toner Add] and perform the function.
8	Service Mode -> Max Image Density Adj	Select [Service Mode] -> [Imaging Process Adjustment] -> [Max Image Density Adj] and make the necessary adjustment, and the image trouble is eliminated.	NO	Go to the next step.

Step	Section	Check item	Result	Action
9	Connector connection	Faulty connector connection the high voltage unit (CN1, CN2), printer control board (CN29, CN30, CN41), MFP board (PJ03, PJ47) and PH relay board (CN1, CN2).	YES	Reconnect the connector.
10	Service Mode -> Initialize + Image Stabilization	Select [Service Mode] -> [Imaging Process Adjustment] -> [Stabilizer] -> [Initialize + Image Stabilization] and [Gradation Adjust], and the image trouble is eliminated.	YES	Readjust.
			NO	• Replace the drum unit. • Replace the PH unit. • Replace the high voltage unit.

(4) Scanner troubleshooting procedure

Step	Section	Check item	Result	Action
1	Original	Original is damaged or dirty.	YES	Change original.
2	Original Type	Select [Copy setting] -> [Original Type] and change the setting, and the image trouble is eliminated.	NO	Go to the next step.
3	Basic -> Density	Change the density setting, and the image trouble is eliminated.	NO	Go to the next step.
4	When DF is being used	DF does not lie flat.	YES	• Adjust the DF height. (DF-701/DF-624) • Replace DF if it is deformed or hinges are broken.
5	When original glass is being used	Original glass or original pad is dirty.	YES	Clean.
6	Parts along scanning path	Mirror, lens, light guide or reflectors is dirty.	YES	Clean.
7	Main body side_shading sheet	Shading sheet of main body is dirty.	YES	Clean.
8	• When DF-701/DF-624 is being used: 1st side • When DF-624 is being used: 2nd side	Slit glass or document reading glass cleaning brush is dirty.	YES	Clean.
			NO	• Replace the LED exposure unit. • Replace the CCD board.
9	When DF-701 is being used: 2nd side	• Shading correction surface of DF-701 is dirty. • CIS glass or CIS cleaning brush is dirty.	YES	Clean.
			NO	Replace the CIS module.

15.3.9 Void areas, White spots

(1) Typical faulty images

The arrow in the exemplary image troubles indicates the paper feeding direction.

[1] [2]

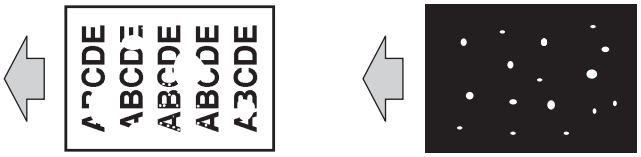

[1]	Void areas	[2]	White spots

(2) Troubleshooting procedure

Step	Section	Check item	Result	Action
1	Paper Setting	The paper to be used for printing does not match the paper type and size of paper setting selected on the machine.	YES	Make the paper setting again on the machine.
2	Use in areas with low atmospheric pressure	Select [Service Mode] -> [Imaging Process Adjustment] -> [Grad/Dev AC Bias V Selection] and change the setting to [ON]. This eliminates the trouble.	NO	Change the setting to [OFF] and go to the next step.
3	IDC sensor	• IDC sensor is dirty. • IDC sensor shutter does not operate properly.	YES	• Clean. • Clean or correct the IDC sensor shutter.
4	Service Mode -> Stabilizer	Select [Service Mode] -> [Imaging Process Adjustment] -> [Stabilizer] -> [Stabilization Only] and the image trouble is eliminated.	NO	Go to the next step.
5	Service Mode -> Gradation Adjust	Select [Service Mode] -> [Imaging Process Adjustment] -> [Gradation Adjust] and the image trouble is eliminated.	NO	Go to the next step.
6	Service Mode -> Primary transfer adj.	Select [Service Mode] -> [Imaging Process Adjustment] -> [Transfer Voltage Fine Adj] -> [Primary transfer adj.] and the image trouble is eliminated. * Decrease the setting value for white dots.	NO	Return the setting value to the original one and go to the next step.

Step	Section	Check item	Result	Action
7	Service Mode -> 2nd transfer adj.	Select [Service Mode] -> [Imaging Process Adjustment] -> [Transfer Voltage Fine Ad] -> [2nd transfer adj.] and the image trouble is eliminated. * Increase or decrease the setting value to find a specific value at which the trouble is eliminated.	NO	Return the setting value to the original one and go to the next step.
8	Image check	• Select [Service Mode] -> [Test Mode] -> [Halftone Pattern]. Select "SINGLE", "HYPER", "Gradation", "1-Sided", "Black(1PC)", and "Full Bleed", enter "64" for Density, and load tray 2 with A3 paper. Press the start key. This runs a print cycle. • If the abnormal image does not recur, change Density to "255" and make a print check. • Check the image after printing and the abnormal image is evident.	YES	Go to the next step.
9	Write section	Dirt or foreign matter on the dust-proof glass of the PH.	YES	Clean the PH window.
10	Charging section	There is dirty or foreign matter on charge corona.	YES	• Clean the comb electrode. Clean the charge corona control plate.
11	Photo conductor section	Dirt, scratches, or foreign matter on the photo conductor.	YES	• Clean. Replace the drum unit.
12	Photo conductor section	There is a positive contact between the drum charge corona bias application terminals and the high voltage unit connection terminals (C1).	NO	Clean or correct the terminal.
13	Developing section	Toner bristles not even on the developing roller, resulting in a void area.	YES	Replace the developing unit.
14	1st transfer section	There is a positive contact between the transfer belt application terminals and the high voltage unit connection terminals (T1-1).	NO	Clean or correct the terminal.
15	Transfer belt unit	Dirt, scratches, or foreign matter on the transfer belt.	YES	• Clean. • Replace the transfer belt unit.
16	2nd transfer section	Dirt, scratches, or foreign matter on the 2nd transfer roller.	YES	• Clean. • Replace the transfer roller unit.
17	Paper path	There is dirty or foreign matter on paper path.	YES	Check and clean the paper path including the duplex section.
18	Connector connection	Faulty connector connection the high voltage unit (CN1, CN2), printer control board (CN29, CN30, CN41), MFP board (PJ03, PJ47) and PH relay board (CN1, CN2).	YES	Reconnect the connector.
19	Service Mode -> Initialize + Image Stabilization	Select [Service Mode] -> [Imaging Process Adjustment] -> [Stabilizer] -> [Initialize + Image Stabilization] and [Gradation Adjust], and the image trouble is eliminated.	YES	Readjust.
			NO	• Replace the drum unit. • Replace the PH unit. • Replace the high voltage unit.

15.3.10 Black spots

(1) Typical faulty images

The arrow in the exemplary image troubles indicates the paper feeding direction.

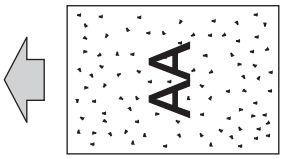

(2) Initial troubleshooting procedure

Step	Section	Check item	Result	Action
1	Paper Setting	The paper to be used for printing does not match the paper type and size of paper setting selected on the machine.	YES	Make the paper setting again on the machine.
2	IDC sensor	• IDC sensor is dirty. • IDC sensor shutter does not operate properly.	YES	• Clean. • Clean or correct the IDC sensor shutter.
3	Service Mode -> Stabilizer	Select [Service Mode] -> [Imaging Process Adjustment] -> [Stabilizer] -> [Stabilization Only] and the image trouble is eliminated.	NO	Go to the next step.
4	Service Mode -> Gradation Adjust	Select [Service Mode] -> [Imaging Process Adjustment] -> [Gradation Adjust] and the image trouble is eliminated.	NO	Go to the next step.

Step	Section	Check item	Result	Action
5	Service Mode -> Primary transfer adj.	Select [Service Mode] -> [Imaging Process Adjustment] -> [Transfer Voltage Fine Adj] and the image trouble is eliminated. * Decrease the setting value for color spots.	NO	Return the setting value to the original one and go to the next step.
6	Image check	• Select [Service Mode] -> [Test Mode] -> [Solid Pattern]. Select "SINGLE", "HYPER", "Gradation", and "1-Sided", enter "64" for Density, and load tray 2 with A3 paper. Press the start key. This runs a print cycle. • Check the image after printing and the abnormal image is evident.	YES	Go to engine troubleshooting procedure.
			NO	Go to scanner troubleshooting procedure.

(3) Engine troubleshooting procedure

Step	Section	Check item	Result	Action
1	Write section	Dirt or foreign matter on the dust-proof glass of the PH.	YES	Clean the PH window.
2	DF installation	DF does not lie flat.	YES	• Clean the comb electrode. • Clean the charge corona control plate.
3	Photo conductor section	Dirt, scratches, or foreign matter on the photo conductor.	YES	• Clean. • Replace the drum unit.
4	Photo conductor section	There is a positive contact between the drum charge corona bias application terminals and the high voltage unit connection terminals (C1).	NO	Clean or correct the terminal.
5	Developing section	There is a positive contact between the developing bias application terminals and the high voltage unit connection terminals (B1).	NO	Clean or correct the terminal.
6	Transfer belt unit	Dirt, scratches, or foreign matter on the transfer belt.	YES	• Clean. • Replace the transfer belt unit.
7	2nd transfer section	Dirt, scratches, or foreign matter on the 2nd transfer roller.	YES	• Clean. • Replace the transfer roller unit.
8	Paper path	There is dirty or foreign matter on paper path.	YES	Check and clean the paper path including the duplex section.
9	Connector connection	Faulty connector connection the high voltage unit (CN1, CN2), printer control board (CN29, CN30, CN41), MFP board (PJ03, PJ47) and PH relay board (CN1, CN2).	YES	Reconnect the connector.
10	Service Mode -> Initialize + Image Stabilization	Select [Service Mode] -> [Imaging Process Adjustment] -> [Stabilizer] -> [Initialize + Image Stabilization] and [Gradation Adjust], and the image trouble is eliminated.	YES	Readjust.
			NO	• Replace the drum unit. • Replace the PH unit. • Replace the high voltage unit.

(4) Scanner troubleshooting procedure

Step	Section	Check item	Result	Action
1	Original	Original is damaged or dirty.	YES	Change original.
2	Original Type	[Copy setting] -> [Original Type] and change the setting, and the image trouble is eliminated.	YES	Correct the setting.
3	When original glass is being used	Original glass or original pad is dirty.	YES	Clean.
			NO	Replace the CCD board.
4	• When DF-701/DF-624 is being used: 1st side • When DF-624 is being used: 2nd side	Slit glass or document reading glass cleaning brush is dirty.	YES	Clean.
			NO	• Replace the LED exposure unit. • Replace the CCD board.
5	When DF-701 is being used: 2nd side	CIS glass or CIS cleaning brush is dirty.	YES	Clean.
			NO	Replace the CIS module.

15.3.11 Blurred image

(1) Typical faulty images

The arrow in the exemplary image troubles indicates the paper feeding direction.



(2) Initial troubleshooting procedure

Step	Section	Check item	Result	Action
1	Damp paper	Paper is damp.	YES	Change paper to one just unwrapped from its package.
2	Paper Setting	The paper to be used for printing does not match the paper type and size of paper setting selected on the machine.	YES	Make the paper setting again on the machine.
3	Service Mode -> Stabilizer	Select [Service Mode] -> [Imaging Process Adjustment] -> [Stabilizer] -> [Stabilization Only] and the image trouble is eliminated.	NO	Go to the next step.
4	Service Mode -> Gradation Adjust	Select [Service Mode] -> [Imaging Process Adjustment] -> [Gradation Adjust] and the image trouble is eliminated.	NO	Go to the next step.
5	Image check	• Select [Service Mode] -> [Test Mode] -> [Lattice Pattern]. Select "SINGLE", "HYPER", "Gradation", "1-Sided", "Black(1PC)", "600dpi", and "Normal", enter "10" for CD width, "10" for FD width, and "64" for Density, and load tray 2 with A3 paper. Press the start key. This runs a print cycle. • Check the image after printing and the abnormal image is evident.	YES	Go to engine troubleshooting procedure.
			NO	Go to scanner troubleshooting procedure.

(3) Engine troubleshooting procedure

Step	Section	Check item	Result	Action
1	Write section	Dirt or foreign matter on the dust-proof glass of the PH.	YES	Clean the PH window.
2	Charging section	Dirt or foreign matter on the charge corona.	YES	• Clean the comb electrode. • Clean the charge corona control plate.
3	Photo conductor section	Dirt or foreign matter on the photo conductor.	YES	• Clean. • Replace the drum unit.
			NO	Replace the PH unit.

(4) Scanner troubleshooting procedure

Step	Section	Check item	Result	Action
1	Original	Original is folded, bent, or raised.	YES	Change original.
2	Original Type	Select [Copy setting] -> [Original Type] and change the setting, and the image trouble is eliminated.	YES	Correct the setting.
3	When original glass is being used	Original glass tilts.	YES	Corrected to the correct position.
4	Parts along scanning path	Mirror, lens, light guide or reflectors is dirty.	YES	Clean.
5	Parts along scanning path	Mirror, lens, light guide or reflectors is tilted.	YES	Corrected to the correct position.
			NO	Replace the CCD board.
6	DF installation	DF does not lie flat.	YES	• Adjust the DF height. (DF-701/DF-624) • Replace DF if it is deformed or hinges are broken.
7	• When DF-701/DF-624 is being used: 1st side • When DF-624 is being used: 2nd side	Slit glass tilts.	YES	Corrected to the correct position.
			NO	• Replace the LED exposure unit. • Replace the CCD board.
8	When DF-701 is being used: 2nd side	CIS glass or CIS cleaning brush is tilted.	YES	Corrected to the correct position.
			NO	Replace the CIS module.

15.3.12 Back marking

(1) Typical faulty images

The arrow in the exemplary image troubles indicates the paper feeding direction.

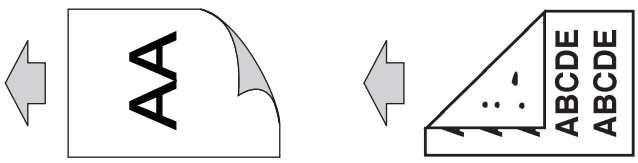

(2) Troubleshooting procedure

Step	Section	Check item	Result	Action
1	Paper Setting	The paper to be used for printing does not match the paper type and size of paper setting selected on the machine.	YES	Make the paper setting again on the machine.
2	Paper path	There is dirty or foreign matter on paper path.	YES	Check and clean the paper path including the duplex section.
3	2nd transfer section	Dirt, scratches, or foreign matter on the 2nd transfer roller.	YES	• Clean. • Replace the transfer roller unit.
4	Fusing unit	There is dirty or foreign matter on paper path of fusing unit.	YES	Clean. (Disassembling the fusing unit is prohibited.)
5	Fusing unit	Scratches on belt and roller in fusing unit.	YES	Replace the fusing unit.
			NO	Replace the high voltage unit.

15.3.13 Blank copy, Black copy

(1) Typical faulty images

The arrow in the exemplary image troubles indicates the paper feeding direction.

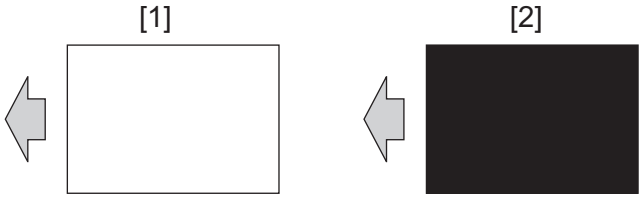

[1] Blank copy	[2] Black copy

(2) Initial troubleshooting procedure

Step	Section	Check item	Result	Action
1	Service Mode -> Stabilizer	Select [Service Mode] -> [Imaging Process Adjustment] -> [Stabilizer] -> [Stabilization Only] and the image trouble is eliminated.	NO	Go to the next step.
2	Image check	• Select [Service Mode] -> [Test Mode] -> [Solid Pattern]. Select "SINGLE", "HYPER", "Gradation", and "1-Sided", enter "120" for Density, and load tray 2 with A3 paper. Press the start key. This runs a print cycle. • Check the image after printing and the abnormal image is evident.	YES	Go to engine troubleshooting procedure.
			NO	Go to scanner troubleshooting procedure.

(3) Engine troubleshooting procedure

Step	Section	Check item	Result	Action
1	2nd transfer section	There is a positive contact between the application terminals of the 2nd transfer roller and the connection terminals (T2, E) and ground terminal of the high voltage unit.	NO	Clean or correct the terminal.
2	Transfer belt unit	There is a positive contact between the transfer belt application terminals and the high voltage unit connection terminals (T1-1).	NO	Clean or correct the terminal.
3	Photo conductor section	The drum unit of the color of toner responsible for the abnormal image is installed properly.	NO	Reinstall.
4	Photo conductor section	There is a positive contact between the drum charge corona bias application terminals and the high voltage unit connection terminals (C1).	NO	Clean or correct the terminal.
5	Developing section	There is a positive contact between the developing bias application terminals and the high voltage unit connection terminals (B1).	NO	Clean or correct the terminal.
6	Connector connection	Faulty connector connection the high voltage unit (CN1, CN2), printer control board (CN29, CN30, CN41) and MFP board (PJ03).	YES	Reconnect the connector.
7	Write section	Faulty connector connection the MFP board (PJ47) and PH relay board (CN1, CN2).	YES	Reconnect the connector.
8	Service Mode -> Self-diagnostic	Select [Service Mode] -> [State Confirmation] -> [Self-diagnostic] -> [Check All] and perform the function. Then, "NG" appears.	YES	Take relevant action corresponding to the check item in which "NG" has appeared.

Step	Section	Check item	Result	Action
			NO	• Replace the high voltage unit. • Replace the printer control board. • Replace the PH unit.

(4) Scanner troubleshooting procedure

Step	Section	Check item	Result	Action
1	Black copy: Scanner section	Foreign matter on scanner rails. Faulty the drive shaft and pulley shaft.	YES	Clean and apply lubricant. *1 *2
2		Scanner drive cable kinks or is damaged.	YES	Correct or change.
3		Scanner moves smoothly.	NO	• Adjust the scanner motor drive belt. • Replace the scanner motor. • Replace the scanner drive board.
4	• When original glass is being used • When DF-701/DF-624 is being used: 1st side	None of the terminal pins of the connection cable between the CCD board (PJ3) and the MFP board (PJ01) is bent and a positive connection is made.	NO	Reconnect the connector.
5	• When original glass is being used • When DF-701/DF-624 is being used: 1st side • When DF-624 is being used: 2nd side	Replace the connection cable between the machine and the DF. This eliminates the trouble.	YES	Replace the connection cable.
6	• When original glass is being used • When DF-701/DF-624 is being used: 1st side • When DF-624 is being used: 2nd side	Select [Service Mode] -> [State Confirmation] -> [Self-diagnostic] -> [Check All] and perform the function. Then, "NG" appears.	YES	Take relevant action corresponding to the check item in which "NG" has appeared.
			NO	• Replace the CCD board. • Replace the MFP board.
7	When DF-701 is being used: 2nd side	Faulty connector connection the CIS power supply unit (J1), relay connector (P6), main body connection section (P1) and DC power supply (CN004).	YES	Reconnect the connector.
8	When DF-701 is being used: 2nd side	Faulty connector connection the CIS module (J221), dual scan image processing board (PJ02, PJ03) and MFP board (PJ22, PJ23).	YES	Reconnect the connector.
9	When DF-701 is being used: 2nd side	Replace the connection cable between the CIS module and the MFP board. This eliminates the trouble.	YES	Replace the connection cable.
10	Parts along scanning path	Mirror, lens, light guide or reflectors is tilted.	YES	Corrected to the correct position.
11	Service Mode -> Self-diagnostic	Select [Service Mode] -> [State Confirmation] -> [Self-diagnostic] -> [Check All] and perform the function. Then, "NG" appears.	YES	Take relevant action corresponding to the check item in which "NG" has appeared.
			NO	• Replace the CIS module. • Replace the dual scan image processing board. • Replace the MFP board.

*1: Apply DURASURF KD-453S to the shaft. DURASURF is a product manufactured by Harves Co., Ltd. (http://www.harves.co.jp).
*2: Apply FLOIL No. 947P or Launa 40 oil to the scanner rails. FLOIL is a product manufactured by KANTO KASEI LTD. (http://www.kanto-kasei.co.jp/).

15.3.14 Uneven pitch

(1) Typical faulty images

The arrow in the exemplary image troubles indicates the paper feeding direction.

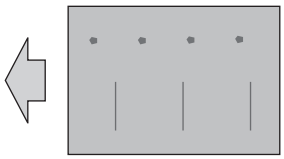

(2) Troubleshooting procedure

Step	Section	Check item	Result	Action
1	Paper Setting	The paper to be used for printing does not match the paper type and size of paper setting selected on the machine.	YES	Make the paper setting again on the machine.

Step	Section	Check item	Result	Action
2	Service Mode -> Stabilizer	Select [Service Mode] -> [Imaging Process Adjustment] -> [Stabilizer] -> [Stabilization Only] and the image trouble is eliminated.	NO	Go to the next step.
3	Service Mode -> Gradation Adjust	Select [Service Mode] -> [Imaging Process Adjustment] -> [Gradation Adjust] and the image trouble is eliminated.	NO	Go to the next step.
4	Image check	• Select [Service Mode] -> [Test Mode] -> [Halftone Pattern]. Select "SINGLE", "HYPER", "Gradation", "1-Sided", "Black(1PC)", and "Full Bleed", enter "64" for Density, and load tray 2 with A3 paper. Press the start key. This runs a print cycle. • Check the image after printing and the abnormal image is evident.	YES	Go to the next step.
5	Uneven pitch at 94 mm interval	Dirt, scratches, or foreign matter on the photo conductor.	YES	• Clean. • Replace the drum unit.
6	Uneven pitch at 28 mm interval	Dirt, scratches, or foreign matter on the developing roller.	YES	• Clean. • Replace the developing unit.
7	Write section	Dirt or foreign matter on the dust-proof glass of the PH.	YES	Clean the PH window.
8	Charging section	There is dirty or foreign matter on charge corona.	YES	• Clean the comb electrode. • Clean the charge corona control plate.
9	Uneven pitch	Dirt, scratches, or foreign matter on the transfer belt.	YES	• Clean. • Replace the transfer belt unit.
10	Uneven pitch at 64 mm interval	Dirt, scratches, or foreign matter on the 2nd transfer roller.	YES	• Clean. • Replace the transfer roller unit.
11	Uneven pitch at 157 mm interval	Dirt, scratches, or foreign matter on the fusing belt.	YES	• Clean. • Replace the fusing unit.
12	Uneven pitch at 94 mm interval	Dirt, scratches, or foreign matter on the fusing pressure roller.	YES	• Clean. • Replace the fusing unit.
13	Paper path	There is dirty or foreign matter on paper path.	YES	• Check and clean the paper path including the duplex section.
14	Connector connection	Faulty connector connection the high voltage unit (CN1, CN2) and printer control board (CN29, CN30).	YES	Reconnect the connector.
			NO	• Replace the transfer belt unit. • Replace the high voltage unit. • Replace the printer control board.

15.3.15 Uneven gloss, rough gloss

(1) Typical faulty images

The arrow in the exemplary image troubles indicates the paper feeding direction.

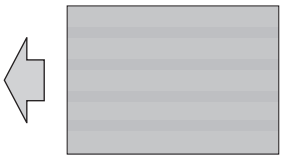

(2) Troubleshooting procedure

Step	Section	Check item	Result	Action
1	Paper Setting	The paper to be used for printing does not match the paper type and size of paper setting selected on the machine.	YES	Make the paper setting again on the machine.
2	Image check	• Select [Service Mode] -> [Test Mode] -> [Halftone Pattern]. Select "SINGLE", "HYPER", "Gradation", "1-Sided", "Black (1PC)", and "Full Bleed", enter "255" for Density, and load tray 2 with A3 paper. Press the start key. This runs a print cycle. • Check the image after printing and the abnormal image is evident. (rough gloss)	YES	Go to the next step.
3	Service Mode-> Fusing Temperature	Select [Service Mode] -> [Machine] -> [Fusing Temperature] and lower the fusing temperature, and the image trouble is eliminated.	NO	Return the fusing temperature to the original one and go to the next step.
4	Exit tray front roller, Exit roller	Faulty pressure operation of the exit tray front roller or exit roller.	YES	Correct.
5	Fusing unit	There is dirty or foreign matter on paper path of fusing unit.	YES	Clean. (Disassembling the fusing unit is prohibited.)
6	Fusing unit	Scratches on belt and roller in fusing unit.	YES	Replace the fusing unit.

Step	Section	Check item	Result	Action
			NO	Replace the power supply of fusing.

15.3.16 Poor fusing performance, Offset

(1) Typical faulty images

The arrow in the exemplary image troubles indicates the paper feeding direction.

[1] [2]

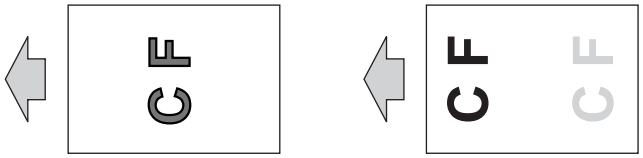

[1]	Poor fusing performance	[2]	Offset

(2) Troubleshooting procedure

Step	Section	Check item	Result	Action
1	Paper Setting	The paper to be used for printing does not match the paper type and size of paper setting selected on the machine.	YES	Make the paper setting again on the machine.
2	Image check: Poor fusing performance	• Select [Service Mode] -> [Test Mode] -> [Halftone Pattern]. Select "SINGLE", "HYPER", "Gradation", "1-Sided", "Black(1PC)", and "Full Bleed", enter "64" for Density, and load tray 2 with A3 paper. Run the print by pressing the start key. • Check the image after printing and the abnormal image is evident.	YES	Go to the next step.
3	Image check: Offset	• Select [Service Mode] -> [Test Mode] -> [Gradation Pattern]. Select "SINGLE", "HYPER", "Gradation", "1-Sided", "Black(1PC)", "Front Half", and "12 gradations", and load tray 2 with A3 paper. Run the print by pressing the start key. • Check the image after printing and the abnormal image is evident.	YES	Go to the next step.
4	Service Mode -> Fusing Temperature	Select [Service Mode] -> [Machine] -> [Fusing Temperature] and make the necessary adjustment, and the image trouble is eliminated. * Poor fusing performance: Decrease the setting value * Offset: Increase the setting value	NO	Return the setting value to the original one and go to the next step.
5	Fusing unit	There is dirty or foreign matter on paper path of fusing unit.	YES	Clean. (Disassembling the fusing unit is prohibited.)
6	Fusing unit	Scratches on belt and roller in fusing unit.	YES	Replace the fusing unit.
			NO	Replace the power supply of fusing.

15.3.17 Brush effect, Image bleeding

(1) Typical faulty images

The arrow in the exemplary image troubles indicates the paper feeding direction.

[1] [2]

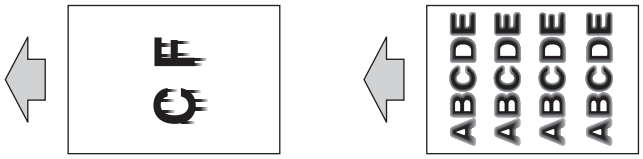

[1]	Brush effect	[2]	Image bleeding

(2) Troubleshooting procedure

Step	Section	Check item	Result	Action
1	Paper Setting	The paper to be used for printing does not match the paper type and size of paper setting selected on the machine.	YES	Make the paper setting again on the machine.
2	Damp paper	Paper is damp.	YES	Change paper to one just unwrapped from its package.

Step	Section	Check item	Result	Action
3	Service Mode -> Stabilizer	Select [Service Mode] -> [Imaging Process Adjustment] -> [Stabilizer] -> [Stabilization Only] and the image trouble is eliminated.	NO	Go to the next step.
4	Service Mode -> Gradation Adjust	Select [Service Mode] -> [Imaging Process Adjustment] -> [Gradation Adjust] and the image trouble is eliminated.	NO	Go to the next step.
5	Image check	• Select [Service Mode] -> [Test Mode] -> [Lattice Pattern]. Select "SINGLE", "HYPER", "Gradation", "1-Sided", "Black(1PC)", "600dpi", and "Normal", enter "10" for CD width, "10" for FD width, and "64" for Density, and load tray 2 with A3 paper. Press the start key. This runs a print cycle. • Check the image after printing and the abnormal image is evident.	YES	Go to the next step.
6	Transfer belt unit	Dirt, scratches, or foreign matter on the transfer belt.	YES	• Clean. • Replace the transfer belt unit.
7	2nd transfer section	Dirt, scratches, or foreign matter on the 2nd transfer roller.	YES	• Clean. • Replace the transfer roller unit.
8	Service Mode -> Fusing Temperature	Select [Service Mode] -> [Machine] -> [Fusing Temperature] and make the necessary adjustment, and the image trouble is eliminated. * Increase or decrease the setting value	NO	Return the setting value to the original one and go to the next step.
9	Service Mode -> Fusing Transport Speed	Select [Service Mode] -> [Machine] -> [Fusing Transport Speed] and make the necessary adjustment, and the image trouble is eliminated. * Brush effect: Increase or decrease the setting value * Image bleeding: Decrease the setting value	NO	Return the setting value to the original one and go to the next step.
10	Fusing unit	There is dirty or foreign matter on paper path of fusing unit.	YES	Clean. (Disassembling the fusing unit is prohibited.)
11	Fusing unit	Scratches on belt and roller in fusing unit.	YES	Replace the fusing unit.
			NO	Replace the power supply of fusing.

15.3.18 Blurred fine lines

(1) Typical faulty images

The arrow in the exemplary image troubles indicates the paper feeding direction.

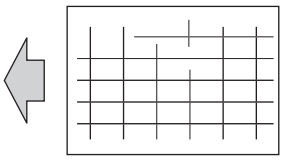

(2) Initial troubleshooting procedure

Step	Section	Check item	Result	Action
1	Damp paper	Paper is damp.	YES	Change paper to one just unwrapped from its package.
2	Paper Setting	The paper to be used for printing does not match the paper type and size of paper setting selected on the machine.	YES	Make the paper setting again on the machine.
3	Unclear thin line in main scan direction	Select [Service Mode] -> [Machine] -> [LD adjustment] -> [LD Light Width Adjustment].	NO	Return the setting value to the original one and go to the next step.
4	Service Mode -> Stabilizer	Select [Service Mode] -> [Imaging Process Adjustment] -> [Stabilizer] -> [Stabilization Only] and the image trouble is eliminated.	NO	Go to the next step.
5	Service Mode -> Gradation Adjust	Select [Service Mode] -> [Imaging Process Adjustment] -> [Gradation Adjust] and the image trouble is eliminated.	NO	Go to the next step.
6	Image check	• Select [Service Mode] -> [Test Mode] -> [Lattice Pattern]. Select "SINGLE", "FEET", "1-Sided", "Black(1PC)", "600dpi", and "Normal", enter "3" for CD width, "3" for FD width, and "255" for Density, and load tray 2 with A3 paper. Press the start key. This runs a print cycle. • Check the image after printing and the abnormal image is evident.	YES	Go to engine troubleshooting procedure.
			NO	Go to scanner troubleshooting procedure.

(3) Engine troubleshooting procedure

Step	Section	Check item	Result	Action
1	Write section	Dirt or foreign matter on the dust-proof glass of the PH.	YES	Clean the PH window.
2	Charging section	Dirt or foreign matter on the charge corona.	YES	• Clean the comb electrode. • Clean the charge corona control plate.
3	Photo conductor section	Dirt or foreign matter on the photo conductor.	YES	• Clean. • Replace the drum unit.
4	Transfer belt unit	Dirt, scratches, or foreign matter on the transfer belt.	YES	• Clean. • Replace the transfer belt unit.
			NO	Replace the PH unit.

(4) Scanner troubleshooting procedure

Step	Section	Check item	Result	Action
1	Original	Original is folded, bent, or raised.	YES	Change original.
2	Original Type	Select [Copy setting] -> [Original Type] and change the setting, and the image trouble is eliminated.	YES	Correct the setting.
3	When original glass is being used	Original glass tilts.	YES	Corrected to the correct position.
4	Parts along scanning path	Mirror, lens, light guide or reflectors is tilted.	YES	Corrected to the correct position.
			NO	Replace the CCD board.
5	When DF is being used	DF does not lie flat.	YES	• Adjust the DF height. (DF-701/DF-624) • Replace DF if it is deformed or hinges are broken.
6	• When DF-701/DF-624 is being used: 1st side • When DF-624 is being used: 2nd side	Slit glass tilts.	YES	Corrected to the correct position.
			NO	• Replace the LED exposure unit. • Replace the CCD board.
7	When DF-701 is being used: 2nd side	CIS glass or CIS cleaning brush is tilted.	YES	Corrected to the correct position.
			NO	Replace the CIS module.

15.3.19 Moire

(1) Typical faulty images

The arrow in the exemplary image troubles indicates the paper feeding direction.

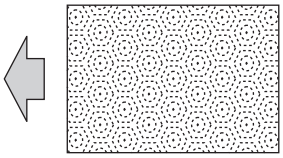

(2) Initial troubleshooting procedure

Step	Section	Check item	Result	Action
1	Original	Original is damaged or dirty.	YES	Change original.
2	Original Type	Select [Copy setting] -> [Original Type] and change the setting, and the image trouble is eliminated.	NO	Go to the next step.
3	Original direction	Change the direction in which the original is placed. This eliminates moire.	YES	Change the original direction.
4	Service Mode -> Stabilizer	Select [Service Mode] -> [Imaging Process Adjustment] -> [Stabilizer] -> [Stabilization Only] and the image trouble is eliminated.	NO	Go to the next step.
5	Service Mode -> Gradation Adjust	Select [Service Mode] -> [Imaging Process Adjustment] -> [Gradation Adjust] and the image trouble is eliminated.	NO	Go to the next step.
6	Image check	• Select [Service Mode] -> [Test Mode] -> [Halftone Pattern]. Select "SINGLE", "HYPER", "Gradation", "1-Sided", "Black(1PC)", and "Full Bleed", enter "64" for Density, and load tray 2 with A3 paper. Press the start key. This runs a print cycle. • Check the image after printing and the abnormal image is evident.	YES	Go to engine troubleshooting procedure.
			NO	Go to scanner troubleshooting procedure.

(3) Engine troubleshooting procedure

Step	Section	Check item	Result	Action
1	Service Mode -> Paper Feed Direction Adj.	Select [Service Mode] -> [Machine] -> [Printer Area] -> [Paper Feed Direction Adj.] and make the necessary adjustment, and the image trouble is eliminated.	NO	Go to the next step.
2	Service Mode -> Initialize + Image Stabilization	Select [Service Mode] -> [Imaging Process Adjustment] -> [Stabilizer] -> [Initialize + Image Stabilization] and [Gradation Adjust], and the image trouble is eliminated.	YES	Readjust.
			NO	• Replace the PH unit. • Replace the MFP board.

(4) Scanner troubleshooting procedure

Step	Section	Check item	Result	Action
1	When original glass is being used: Sub Scan Zoom Adj.	Select [Service Mode -> [Machine] -> [Scan Area] -> [Sub Scan Zoom Adj.] and make the necessary adjustment, and the image trouble is eliminated.	YES	Readjust.
			NO	Replace the CCD board.
2	When DF-701/DF-624 is being used: 1st side: Feed Zoom	Select [Service Mode] -> [ADF] -> [Feed Zoom] and make the necessary adjustment, and the image trouble is eliminated.	YES	Readjust.
			NO	Replace the CCD board.
3	When DF-701 is being used: 2nd side: FD-Mag. Adj. (B)	Select [Service Mode] -> [ADF] -> [FD-Mag. Adj. (B)] and make the necessary adjustment, and the image trouble is eliminated.	NO	Go to the next step.
4	When DF-701 is being used: 2nd side: Main Scanning Direction Zoom	Select [Service Mode] -> [ADF] -> [Main Scanning Direction Zoom] and make the necessary adjustment, and the image trouble is eliminated.	YES	Readjust.
			NO	Replace the CIS module.

15.3.20 Skewed image

(1) Typical faulty images

The arrow in the exemplary image troubles indicates the paper feeding direction.

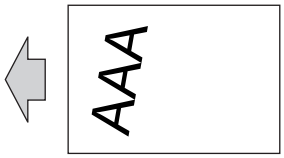

(2) Initial troubleshooting procedure

Step	Section	Check item	Result	Action
1	Original	Original is skew.	YES	• Reposition original. • Use an original that is not skew.
2	Original direction	Change the direction in which the original is placed. This eliminates the trouble.	YES	Change the original direction.
3	Paper Setting	The paper to be used for printing does not match the paper type and size of paper setting selected on the machine.	YES	Make the paper setting again on the machine.
4	Service Mode -> Stabilizer	Select [Service Mode] -> [Imaging Process Adjustment] -> [Stabilizer] -> [Stabilization Only] and the image trouble is eliminated.	NO	Go to the next step.
5	Service Mode -> Gradation Adjust	Select [Service Mode] -> [Imaging Process Adjustment] -> [Gradation Adjust] and the image trouble is eliminated.	NO	Go to the next step.
6	Image check	• Select [Service Mode] -> [Test Mode] -> [Lattice Pattern]. Select "SINGLE", "FEET", "1-Sided", "Black(1PC)", "600dpi", and "Normal", enter "5" for CD width, "5" for FD width, and "255" for Density, and load tray 2 with A3 paper. Press the start key. This runs a print cycle. • Check the image after printing and the abnormal image is evident.	YES	Go to engine troubleshooting procedure.
			NO	Go to scanner troubleshooting procedure.

(3) Engine troubleshooting procedure

Step	Section	Check item	Result	Action
1	Paper path	There is dirty or foreign matter on registration roller or paper path.	YES	Clean paper path.
2	Service Mode -> Printer Reg. Loop Adj.	Select [Service Mode] -> [Machine] -> [Printer Reg. Loop Adj.] and make the necessary adjustment, and the image trouble is eliminated.	NO	Go to the next step.

Step	Section	Check item	Result	Action
3	Service Mode -> Initialize + Image Stabilization	Select [Service Mode] -> [Imaging Process Adjustment] -> [Stabilizer] -> [Initialize + Image Stabilization] and [Gradation Adjust], and the image trouble is eliminated.	YES	Readjust.
			NO	Check the registration roller.

(4) Scanner troubleshooting procedure

Perform the scanner troubleshooting procedure after having made sure that the same image trouble does not occur in the printer system.

Step	Section	Check item	Result	Action
1	Parts along scanning path	Mirror, lens, light guide or reflectors is tilted.	YES	Corrected to the correct position.
2	When original glass is being used	Original glass not installed properly.	YES	• Reinstall Original glass. • Check the original set position.
			NO	Replace the CCD board.
3	When DF-701/DF-624 is being used: skew image on both sides	Select [Service Mode] -> [ADF] -> [Registration Loop Adj] and make the adjustment. This eliminates the problem of skew image.	YES	Readjust.
4	While DF-701/DF-624 is being used: skew image on front side only	Perform [Adjusting front side skew feed on ADF] of mechanical adjustment. This eliminates the problem of skew image. (DF-701/DF-624)	YES	Readjust.
			NO	Replace the CCD board.
5	While DF-701 is being used: skew image on back side only	Perform [Adjusting back side skew feed on ADF] of mechanical adjustment. This eliminates the problem of skew image.	YES	Readjust.
			NO	Replace the CIS module.

15.3.21 Distorted image

(1) Typical faulty images

The arrow in the exemplary image troubles indicates the paper feeding direction.

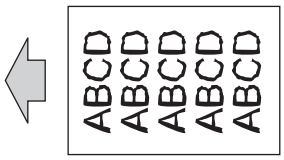

(2) Troubleshooting procedure

Step	Section	Check item	Result	Action
1	Installation state	Machine not installed on a flat site.	YES	Install the machine horizontally.
2	Original Type	Select [Copy setting] -> [Original Type] and change the setting, and the image trouble is eliminated.	YES	Correct the setting.
3	When original glass is being used	Original glass not installed properly.	YES	Corrected to the correct position.
			NO	Replace the CCD board.
4	Parts along scanning path	Mirror, lens, light guide, or reflectors are not installed properly.	YES	Corrected to the correct position.
5	• When DF-701/DF-624 is being used: Distortion on 1st side • When DF-624 is being used: Distortion on 2nd side	CCD board not installed properly.	YES	Corrected to the correct position.
			NO	Replace the CCD board.
6	When DF-701 is being used: Distortion on 2nd side	CIS module not installed properly.	YES	Corrected to the correct position.
			NO	Replace the CIS module.

15.3.22 ACS malfunction

(1) Typical faulty images

The arrow in the exemplary image troubles indicates the paper feeding direction.

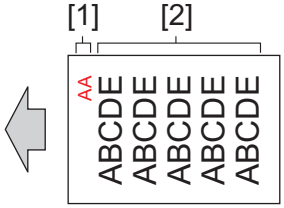

[1]	Color original section	[2]	Black and white original section

(2) Troubleshooting procedure

Step	Section	Check item	Result	Action
1	Original Type	Select [Copy setting] -> [Original Type] and change the setting, and the image trouble is eliminated.	YES	Correct the setting.
2	Original direction	Change the direction in which the original is placed. This eliminates the trouble.	YES	Change the original direction.
3	User Settings -> Auto Color Level Adjust.	Select [Utility] -> [User Settings] -> [System Settings] -> [Auto Color Level Adjust.] and the image trouble is eliminated.	YES	Readjust.
			NO	• Change the original direction. • Make the setting according to the type of original. (If the original contains a colored area at its corner, colored area detection NG may result.)

15.3.23 Abnormal image

(1) Typical faulty images

The arrow in the exemplary image troubles indicates the paper feeding direction.

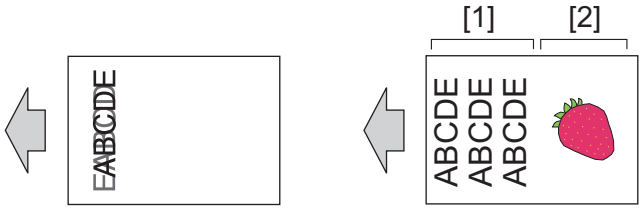

[1]	Data on the previous page	[2]	Data on the next page

(2) Troubleshooting procedure

Step	Section	Check item	Result	Action
1	• When original glass is being used • When DF-701/DF-624 is being used: 1st side	None of the terminal pins of the connection cable between the CCD board (PJ3) and the MFP board (PJ01) is bent and a positive connection is made.	NO	Reconnect the connector.
2	• When original glass is being used • When DF-701/DF-624 is being used: 1st side	Replace the connection cable between the CCD board and the MFP board. This eliminates the trouble.	YES	Replace the connection cable.
			NO	• Replace the CCD board. • Replace the MFP board.
3	When DF-701 is being used: 2nd side	Faulty connector connection the CIS power supply unit (J1), relay connector (P6), main body connection section (P1) and DC power supply (CN004).	YES	Reconnect the connector.
4	When DF-701 is being used: 2nd side	Faulty connector connection the CIS module (J221), dual scan image processing board (PJ02, PJ03) and MFP board (PJ22, PJ23).	YES	Reconnect the connector.
5	When DF-701 is being used: 2nd side	Replace the connection cable between the CIS module and the dual scan image processing board. This eliminates the trouble.	YES	Replace the connection cable.
6	Service Mode -> Self-diagnostic	Select [Service Mode] -> [State Confirmation] -> [Self-diagnostic] -> [Check All] and perform the function. Then, "NG" appears.	YES	Take relevant action corresponding to the check item in which "NG" has appeared.
			NO	• Replace the CIS module. • Replace the dual scan image processing board. • Replace the MFP board.

16. IC PROTECTOR

16.1 Outline

- To increase product safety, this MFP has an IC protector (ICP) installed in each board. ICP is a component that protects IC. If the amount of the current supplied to the electrical parts such as motor exceeds the set level, ICP trips to protect IC from over current.
  The following list contains ICP installed in each board, related devices, and symptoms that occur when ICP trips.

16.2 IC protector list

16.2.1 bizhub 364e/284e/224e

(1) Printer control board

ICP No.	Symbol	Target part name	When ICP trips	
			Symptom in each load	Trouble code and others
ICP1	-	LCC, cabinet	No operation	-
ICP2	FM1	Power supply cooling fan	Power supply cooling fan motor's failure to turn	C5351
ICP3	FM2	Transfer belt cleaner cooling fan	Transfer belt cleaner cooling fan's failure to turn	C2355
	FM8	Paper cooling fan	Paper cooling fan failure to turn	C3302
	SD3	Gate switch solenoid	Misfeed at exit section	-
	CL6	ADU transport clutch	Misfeed at duplex transport section	-
	CL8	Paper exit clutch	Misfeed at exit section	-
ICP4	CL1	Tray 2 paper feed clutch	Misfeed at tray 2 feed section	-
	CL2	Tray 2 vertical transport clutch	Misfeed at tray 2 feed section	-
	M13	Tray 2 lift-up motor	Tray 2 feeder up/down abnormality	C0204
ICP5	CL3	Tray1 paper feed clutch	Misfeed at tray 1 feed section	-
	CL7	Bypass paper feed clutch	Misfeed at manual bypass feed section	-
	SD1	Bypass pick-up solenoid	Manual feed up/down abnormality	C0211
	M12	Tray 1 lift-up motor	Tray 1 feeder up/down abnormality	C0202
ICP6	FRB	Front side board	Polygon error	-
ICP11	-	DC to DC converter for 5V power supply	Freeze control panel (Printer control board communication error)	-
ICP12	FRB	Front side board	Front side communication error	-
	LDDB	Laser drive board	Laser malfunction	-
ICP13	FRB	Front side board	Front side communication error	-
ICP14	PCCB	PC control board	No operation	-
ICP15	TEMS	Heating roller temperature sensor	Fusing abnormally low temperature detection (Main of the heating roller)	C3825
	PCCB	PC control board	No operation	-
ICP16	USBB	USB board	No operation	-
ICP17	-	DF	Unable to be detected	-
	-	Scanner unit	Freeze control panel	-
	DCPU	DC power supply	Freeze control panel (Printer control board to stop operation)	-
ICP18	FM4	Toner bottle cooling fan	Toner bottle cooling fan's failure to turn	C5355
ICP19	FM13	Ozone fan	Ozone fan's failure to turn	C5354

(2) Scanner drive board

ICP No.	Symbol	Target part name	When ICP trips	
			Symptom in each load	Trouble code and others
F1	LU201	LED exposure unit	Exposure LED lighting failure	C9401

16.2.2 DF-624

(1) DF control board

ICP No.	Symbol	Target part name	When ICP trips	
			Symptom in each load	Trouble code and others
F1	-	DC to DC converter input section 24V line	Unable to produce DC24V in DF and MFP unable to detect DF	-
F2	-	DC to DC converter input section 5V line	Unable to produce DC5V in DF and MFP unable to detect DF	-
F3	M2	Document feed motor	Misfeed at feed section	-

ICP No.	Symbol	Target part name	When ICP trips	
			Symptom in each load	Trouble code and others
F4	M3	Registration motor	Misfeed at transport section	-
F5	M1	Document reading motor	Misfeed at transport section	-
F6	FM1	DF cooling fan motor	Cooling fan trouble	C8302
	SD1	Document exit roller release solenoid	Misfeed at switchback section	-
F8	M5	Reading roll release motor	Before reading pressure welding alienation mechanism trouble	C8101
F9	-	Stamp solenoid	Unable to place a stamp	-

16.2.3 DF-701

(1) DF control board

ICP No.	Symbol	Target part name	When ICP trips	
			Symptom in each load	Trouble code and others
F1	-	DC to DC converter input section 24V line	Unable to produce DC24V in DF and MFP unable to detect DF	-
F2	-	DC to DC converter input section 5V line	Unable to produce DC5V in DF and MFP unable to detect DF	-
F3	M2	Document feed motor	Misfeed at feed section	-
F4	M3	Registration motor	Misfeed at transport section	-
F5	M1	Document reading motor	Misfeed at transport section	-
F6	FM1	DF cooling fan motor	Cooling fan trouble	C8302
F8	M4	Document reading glass cleaning motor	Before reading pressure welding alienation mechanism trouble	C8101
F9	-	Stamp solenoid	Unable to place a stamp	-

(2) CIS power supply

ICP No.	Symbol	Target part name	When ICP trips	
			Symptom in each load	Trouble code and others
F1	-	DC to DC converter input section 12V line	CIS LED lighting failure	C9403
F2	-	DC to DC converter input section 5V line	CIS LED lighting failure	C9403

16.2.4 PC-410

(1) PC control board

ICP No.	Symbol	Target part name	When ICP trips	
			Symptom in each load	Trouble code and others
IC2	M133	Shifter motor	LCT lift failure	C0214
	M134	Elevator motor	LCT shift failure	C0210

16.2.5 JS-506

(1) JS control board

ICP No.	Symbol	Target part name	When ICP trips	
			Symptom in each load	Trouble code and others
ICP1	-	CPU power supply	No operation (Due to no power supply to CPU, FS connection not detected)	-
ICP2	-	DC to DC converter input section 24V line	Unable to produce DC24V in FS and MFP unable to detect FS	-
ICP3	M1	Tray shift motor	Shift motor drive malfunction	C-1182

16.2.6 FS-534

(1) FS control board

ICP No.	Symbol	Target part name	When ICP trips	
			Symptom in each load	Trouble code and others
F1	-	Between connection with MFP and 24V power line	No operation (Due to no power supply to CPU, FS connection not detected)	-

16.2.7 SD-511

(1) SD drive board

ICP No.	Symbol	Target part name	When ICP trips	
			Symptom in each load	Trouble code and others
F2	-	24V to 5V DC to DC converter	No operation (Due to no power supply to CPU, SD connection is not detected)	-

16.2.8 FS-533

(1) FS control board

ICP No.	Symbol	Target part name	When ICP trips	
			Symptom in each load	Trouble code and others
F1	-	All ICs and actuators	No operation (Due to no power supply to CPU, FS connection not detected)	-
CP1	-	DC to DC converter input section 5V line	No operation (Due to no power supply to CPU, FS connection not detected)	-
CP2	-	Regulator	No operation (Due to no power supply to CPU, FS connection not detected)	-
CP3	-	DC to DC converter input section 24V line	No operation (Due to no power supply to CPU, FS connection not detected)	-
CP21	SD101	Paper surface detect solenoid	No operation	-
CP22	SD102	Batch solenoid	No operation	-
CP23	SD103	Paper exit roller solenoid	No operation	-
CP101	M101	Paper conveyance motor	Misfeed at transport section	-
CP102	M102	Paper exit motor	Misfeed at transport section	-
CP103	M103	Alignment roller motor	Misfeed at transport section	-
CP104	M104	Exit roller lift up motor	Exit roller pressure/ retraction malfunction	C11A1
CP105	M105	Alignment motor/F	Alignment motor/Fr's malfunction	C1103
	M106	Alignment motor/R	Alignment plate motor/Rr's malfunction	C1140
CP107	M107	Stapler movement motor	Stapler movement motor's malfunction	C1106
CP109	M109	Tray lift up motor	Main tray up/down motor's drive malfunction	C1102

16.2.9 PK-519

(1) PK control board

ICP No.	Symbol	Target part name	When ICP trips	
			Symptom in each load	Trouble code and others
F201	M201	Punch motor	Punch drive motor's malfunction	C1132

L PARTS/CONNECTOR LAYOUT DRAWING

1. PARTS LAYOUT DRAWING

1.1 bizhub 364e/284e/224e

1.1.1 Scanner section

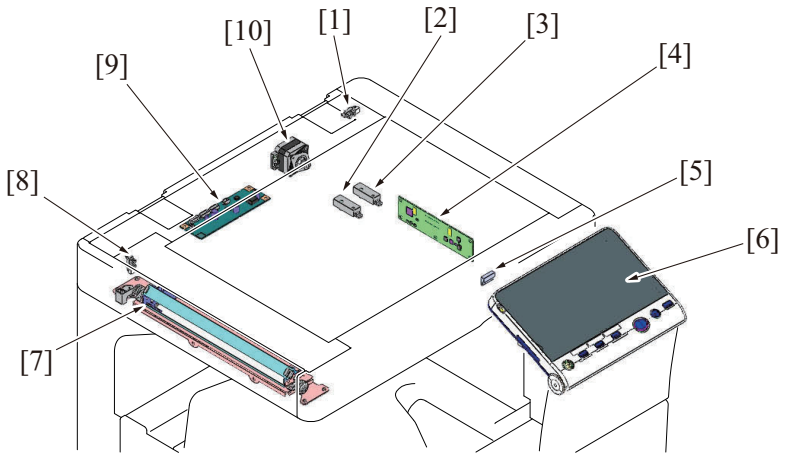

[1]	Angle sensor (PS202)	[2]	Original size sensor/2 (PS205)
[3]	Original size sensor/1 (PS204)	[4]	CCD board (CCDB)
[5]	Original cover sensor (RS201)	[6]	Control panel unit
[7]	LED exposure unit (LU201)	[8]	Scanner home sensor (PS201)
[9]	Scanner drive board (SCDB)	[10]	Scanner motor (M201)

1.1.2 Front side

(1) Board/switch/sensor/others

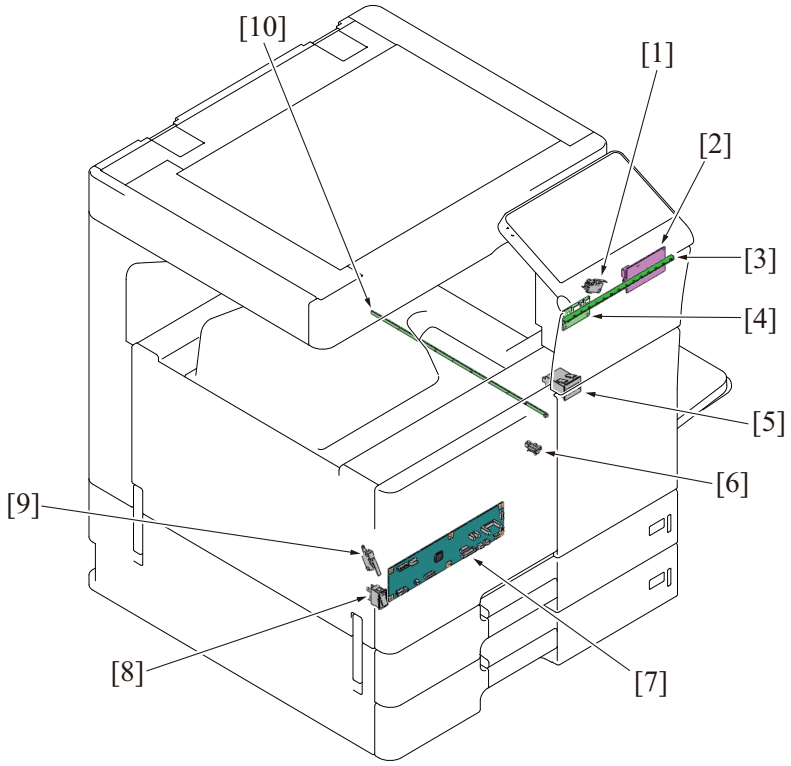

[1]	Right door switch (SW3)	[2]	USB board (USBB)
[3]	LED board (LEDB)	[4]	LED control board (LEDCB)
[5]	Total counter (TCT)	[6]	Toner empty sensor/K (PS31)
[7]	Front side board (FRB)	[8]	Main power switch (SW1)

[9]	Front door switch (SW2)	[10]	Erase LED/K (EL/K)

(2) Load

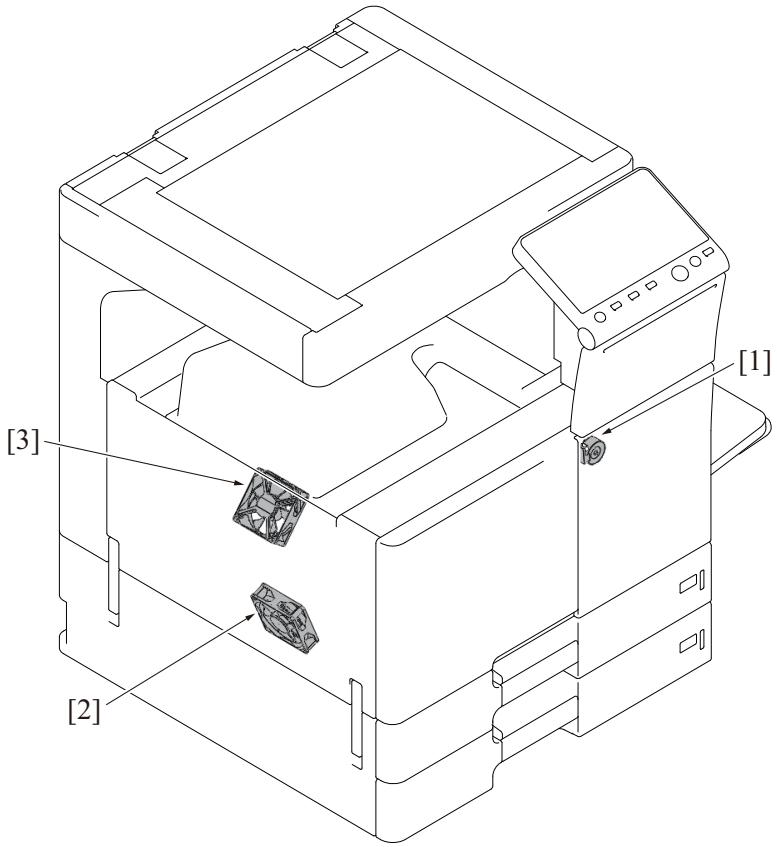

[1]	Toner supply motor/K (M6)	[2]	Power supply cooling fan (FM1)
[3]	Transfer belt cleaner cooling fan (FM2)	-	-

1.1.3 Back side

(1) Board

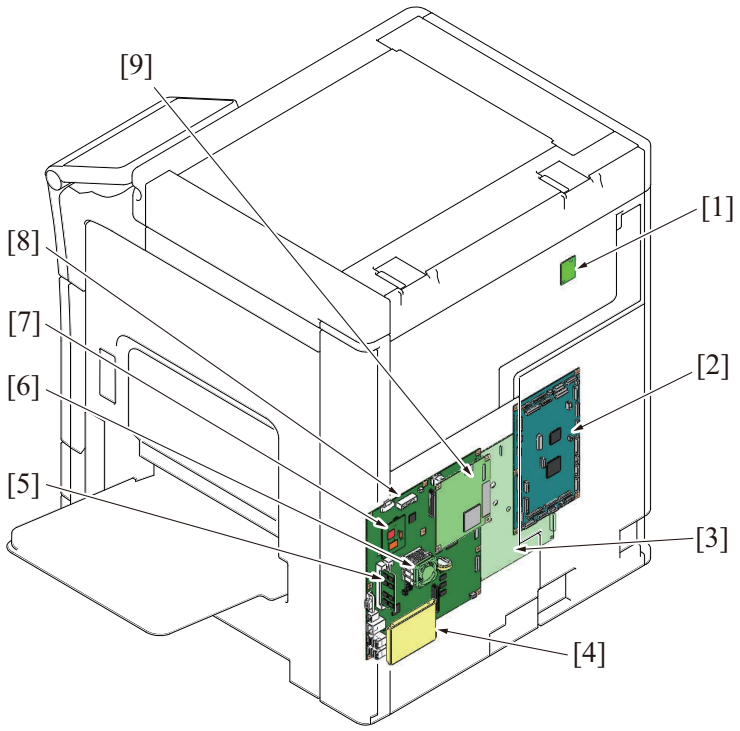

[1]	ERP board (ERPB)	[2]	Printer control board (PRCB)
[3]	High voltage unit (HV)	[4]	Hard disk (HDD)
[5]	Memory board/1 (MEMB/1)	[6]	CPU cooling fan (FM14)
[7]	SSD board (SSDB)	[8]	MFP board (MFPB)
[9]	Dual scan image processing board (DSIPB)	-	-

(2) Switch/sensor/others

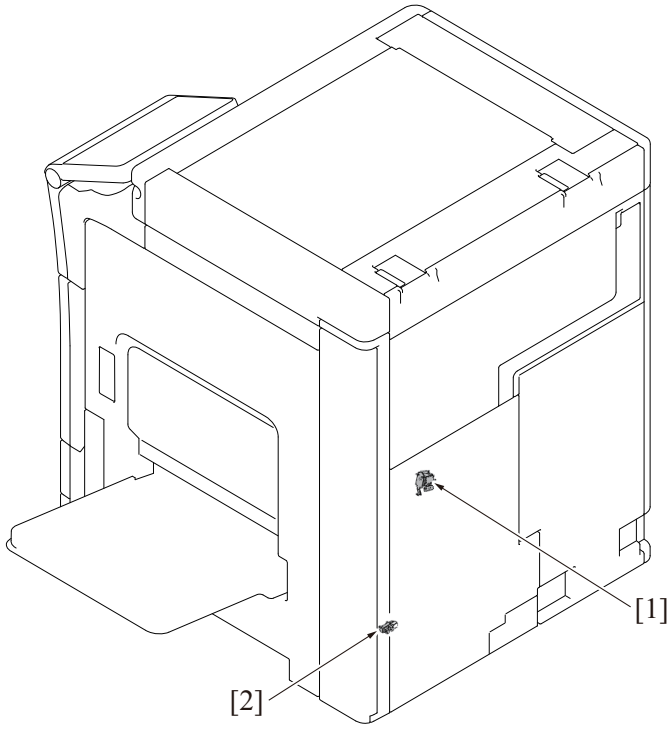

[1]	Developing solenoid (SD4)	[2]	USB cover sensor (PS50)

(3) Load

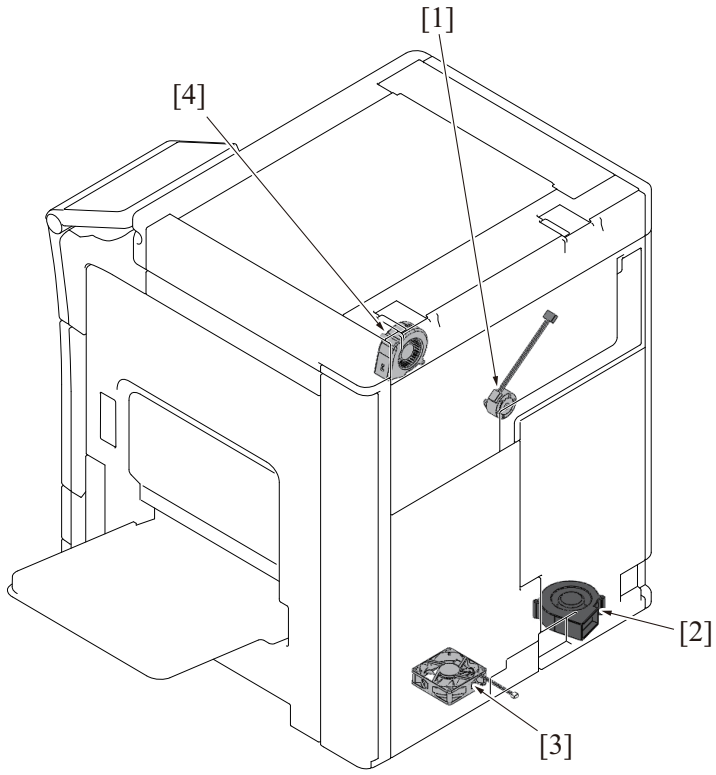

[1]	Toner bottle motor (M10)	[2]	Ozone fan (FM13)
[3]	Machine rear side cooling fan (FM3)	[4]	Paper cooling fan (FM8)

1.1.4 Left side

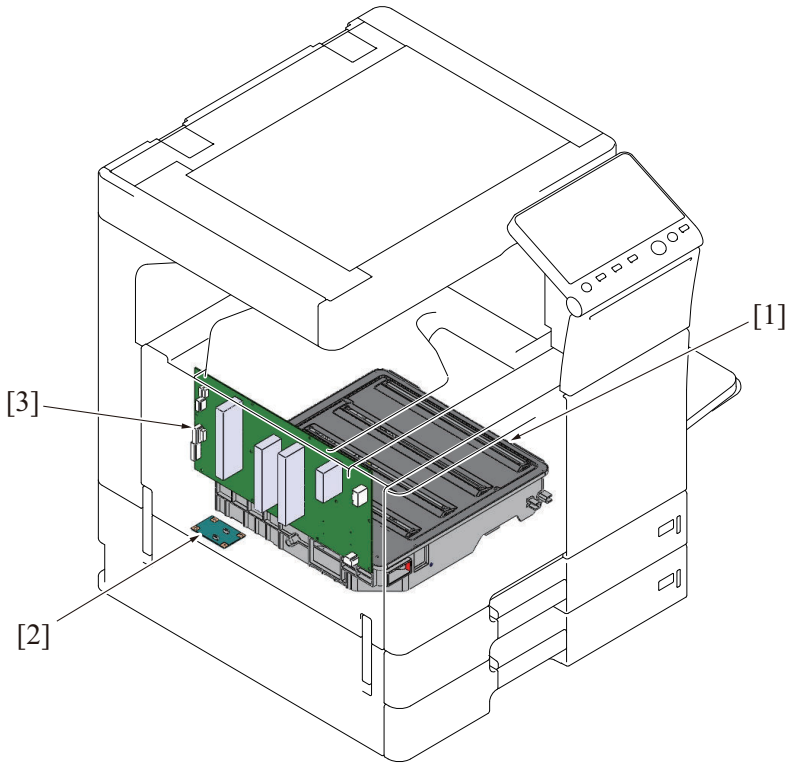

[1]	PH unit	[2]	PH relay board (PHRYB)
[3]	DC power supply (DCPU)	-	-

1.1.5 Right side

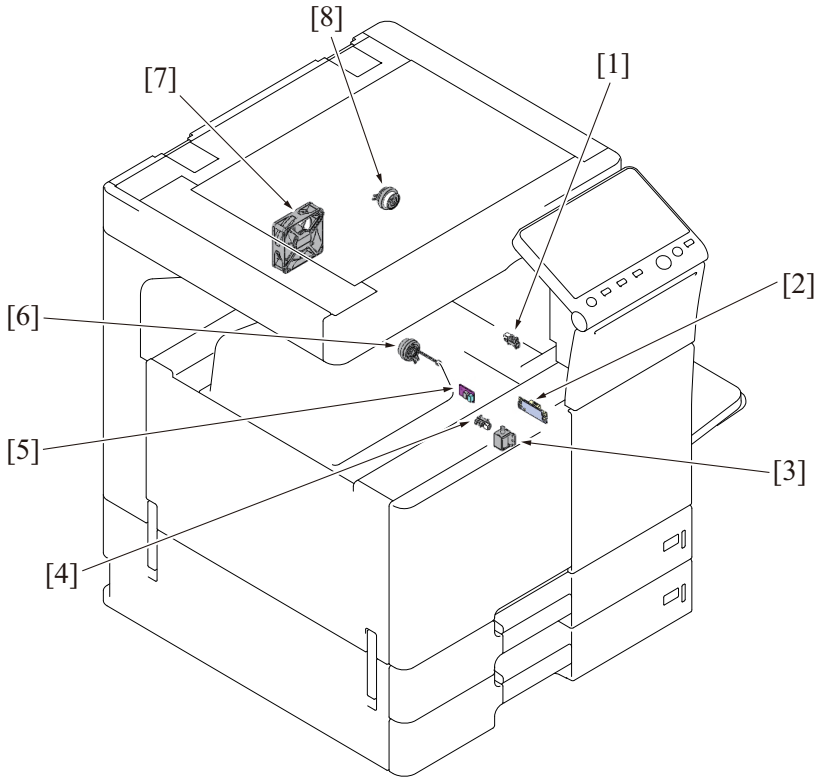

[1]	Fusing loop sensor (PS2)	[2]	IDC sensor/Fr (IDCS/Fr)
[3]	IDC sensor shutter solenoid (SD2)	[4]	Registration sensor (PS1)
[5]	Temperature/humidity sensor (TEM/HUMS)	[6]	Registration clutch (CL4)
[7]	Toner bottle cooling fan (FM4)	[8]	Paper exit clutch (CL8)

1.1.6 Manual bypass tray

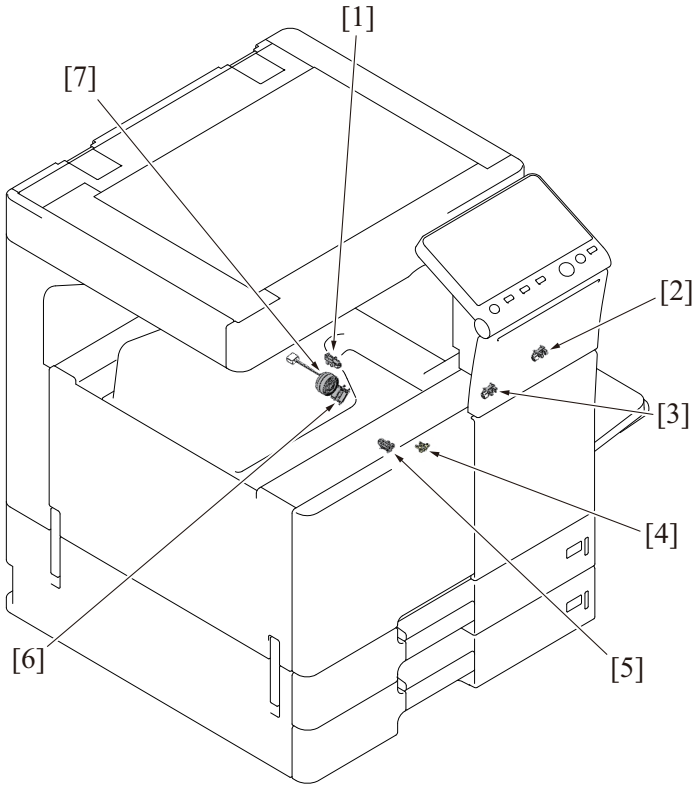

[1]	Bypass lift-up position sensor (PS26)	[2]	Bypass FD paper size sensor/2 (PS29)
[3]	Bypass FD paper size sensor/1 (PS28)	[4]	Bypass CD paper size VR (VR1)
[5]	Bypass paper empty sensor (PS27)	[6]	Bypass pick-up solenoid (SD1)
[7]	Bypass paper feed clutch (CL7)	-	-

1.1.7 Tray 1

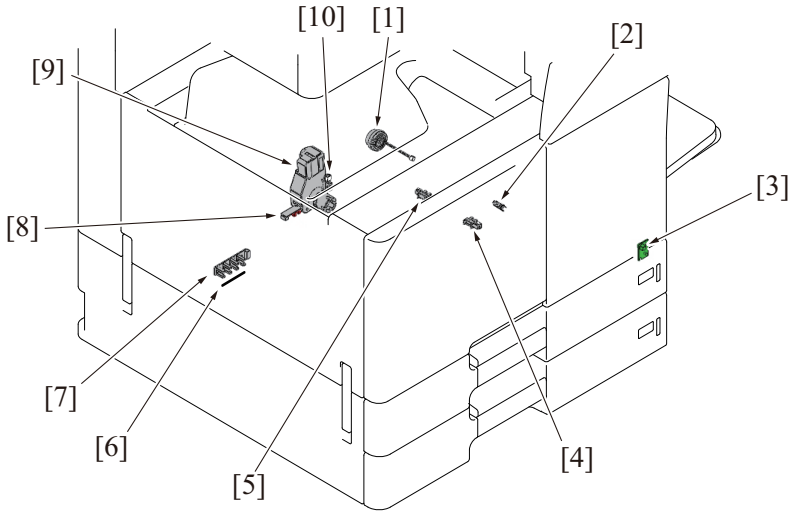

[1]	Tray 1 paper feed clutch (CL3)	[2]	Tray 1 paper feed sensor (PS23)
[3]	Tray 1 empty indicator board (PEIB/1)	[4]	Tray 1 paper empty sensor (PS24)
[5]	Tray 1 upper limit sensor (PS25)	[6]	Paper temperature sensor (TH4)
[7]	Tray 1 FD paper size board (FDPSB/1)	[8]	Tray 1CD paper size board (CDPSB/1)
[9]	Tray 1 lift-up motor (M12)	[10]	Tray 1 paper near empty sensor (PS11)

1.1.8 Tray 2

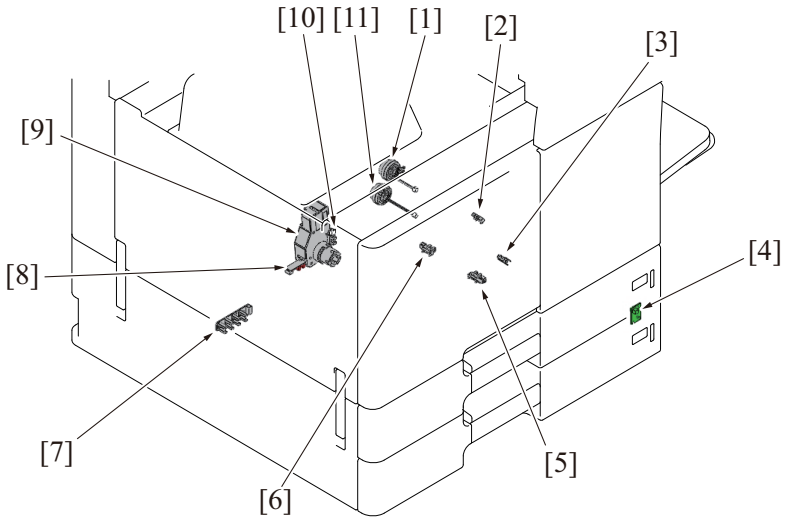

[1]	Tray 2 vertical transport clutch (CL2)	[2]	Tray 2 vertical transport sensor (PS19)
[3]	Tray 2 paper feed sensor (PS20)	[4]	Tray 2 empty indicator board (PEIB/2)
[5]	Tray 2 paper empty sensor (PS21)	[6]	Tray 2 upper limit sensor (PS22)
[7]	Tray 2 FD paper size board (FDPSB/2)	[8]	Tray 2 CD paper size board (CDPSB/2)
[9]	Tray 2 lift-up motor (M13)	[10]	Tray 2 paper near empty sensor (PS12)
[11]	Tray 2 paper feed clutch (CL1)	-	-

1.1.9 Fusing/paper exit section

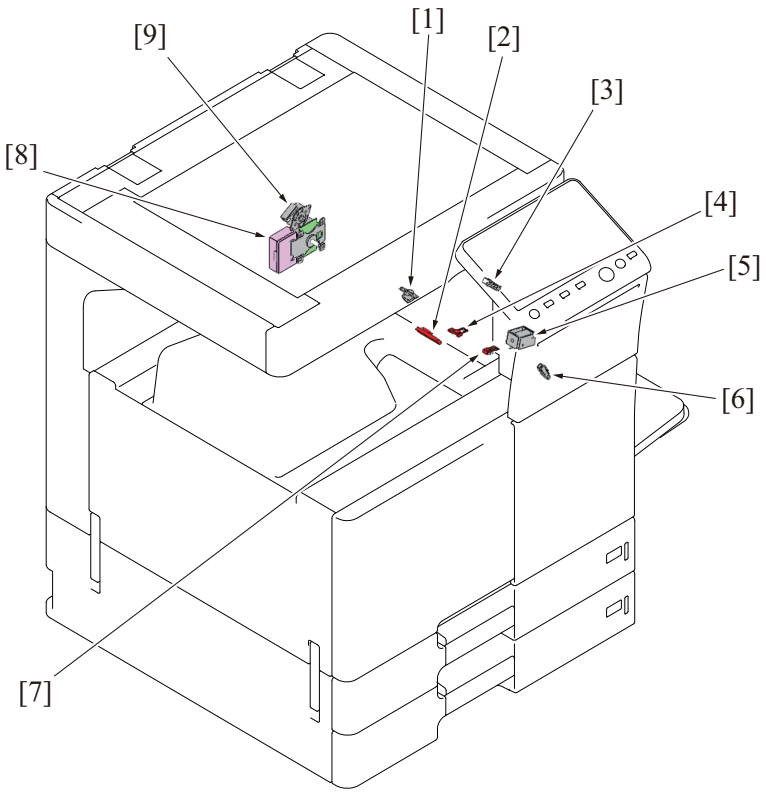

[1]	Heating roller thermostat (TS1)	[2]	Heating roller temperature sensor (TEMS)
[3]	Paper exit sensor (PS3)	[4]	Heating roller thermistor/2 (TH2)
[5]	Gate switch solenoid (SD3)	[6]	Fusing pressure home sensor (PS38)
[7]	Heating roller thermistor/1 (TH1)	[8]	Fusing motor (M3)
[9]	Fusing pressure motor (M11)	-	-

1.1.10 Duplex section

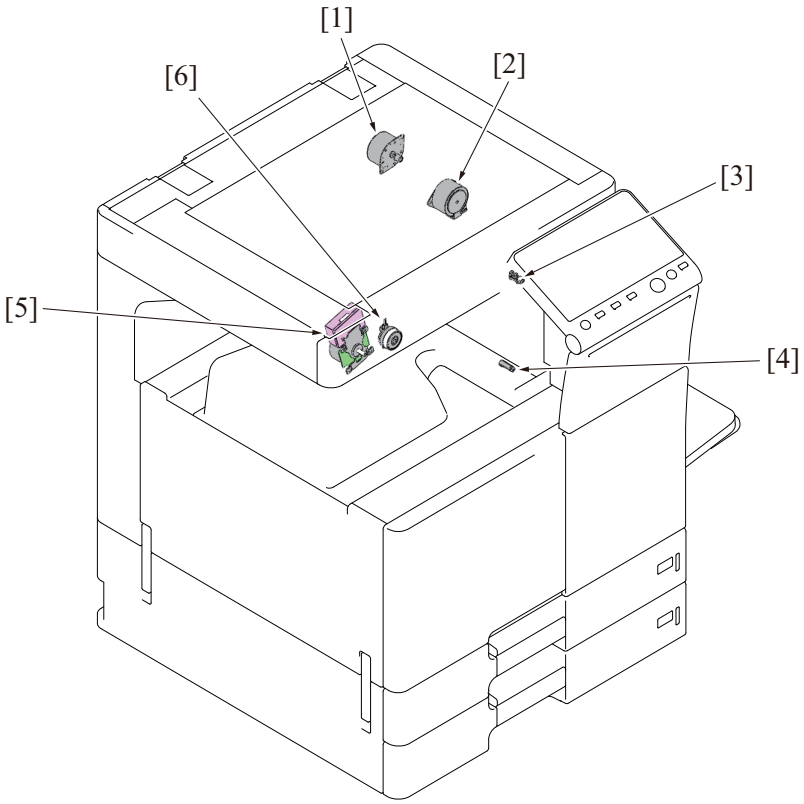

[1]	Reverse motor (M4)	[2]	ADU transport motor (M5)
[3]	ADU paper passage sensor/1 (PS40)	[4]	ADU paper passage sensor/2 (PS41)
[5]	Transport motor (M1)	[6]	ADU transport clutch (CL6)

1.2 DF-701/SP-501 (Option)

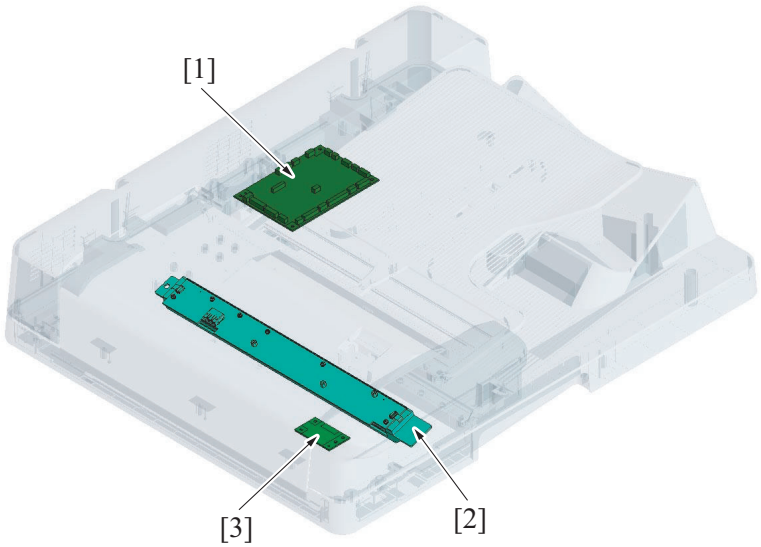

[1]	DF control board (DFCB)	[2]	CIS module (CIS)
[3]	CIS power supply (CISPU)	-	-

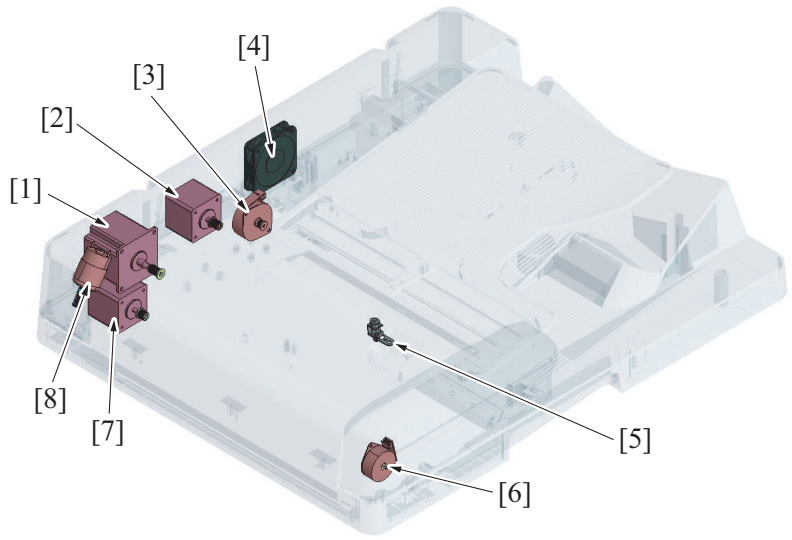

[1]	Document reading motor (M1)	[2]	Document feed motor (M2)
[3]	CIS cleaning motor (M5)	[4]	DF cooling fan motor (FM1)
[5]	Stamp solenoid (SD1) *	[6]	Document reading glass cleaning motor (M6)
[7]	Registration motor (M3)	[8]	Reading roller release motor (M4)

- * : Option

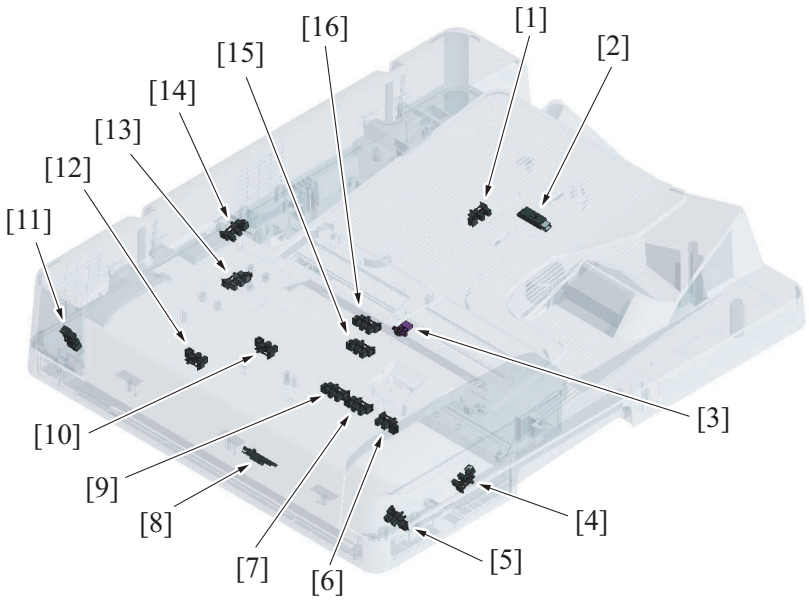

[1]	Document length sensor/1 (PS8)	[2]	Document length sensor/2 (PS9)
[3]	Document width sensor (VR1)	[4]	CIS cover sensor (PS15)
[5]	Document reading glass cleaning sensor (PS13)	[6]	Mixed original sensor/3 (PS12)
[7]	Mixed original sensor/2 (PS11)	[8]	Document reading sensor (PS6)
[9]	Mixed original sensor/1 (PS10)	[10]	After separate sensor (PS2)
[11]	Reading roll position sensor (PS4)	[12]	Registration sensor (PS3)
[13]	CIS cleaning sensor (PS7)	[14]	Upper door sensor (PS14)
[15]	Document exit sensor (PS5)	[16]	Document empty sensor (PS1)

1.3 DF-624/SP-501 (Option)

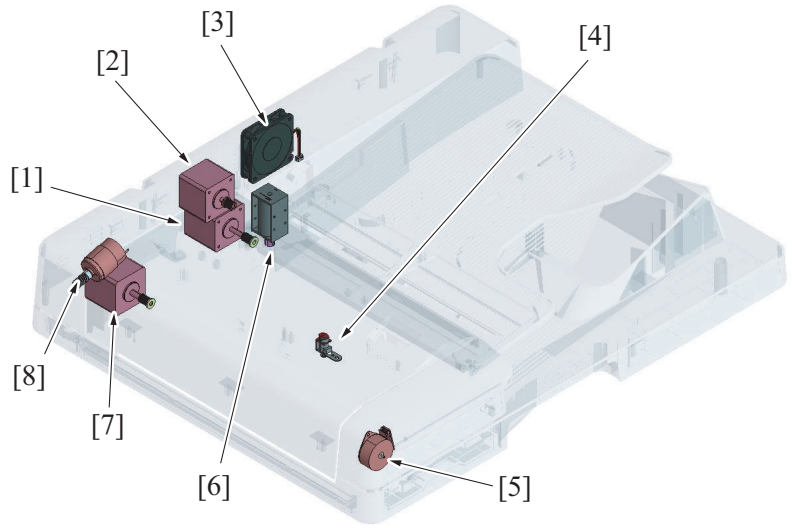

[1]	Registration motor (M3)	[2]	Document feed motor (M2)
[3]	DF cooling fan motor (FM1)	[4]	Stamp solenoid (SD2) *
[5]	Glass cleaning motor (M4)	[6]	Document exit roller release solenoid (SD1)
[7]	Document reading motor (M1)	[8]	Reading roll release motor (M5)

- * : Option

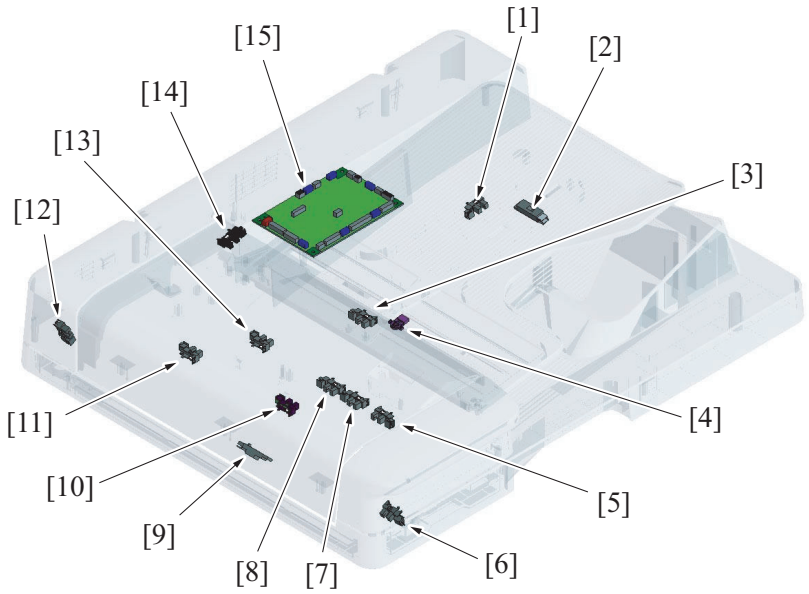

[1]	Document length size sensor/1 (PS6)	[2]	Document length size sensor/2 (PS7)
[3]	Document empty sensor (PS1)	[4]	Document width size sensor (VR1)
[5]	Mixed original sensor/3 (PS10)	[6]	Document reading glass cleaning sensor (PS12)
[7]	Mixed original sensor/2 (PS9)	[8]	Mixed original sensor/1 (PS8)
[9]	Document reading sensor (PS4)	[10]	Document exit sensor (PS5)
[11]	Document registration sensor (PS3)	[12]	Reading roll position sensor (PS11)
[13]	After Separate sensor (PS2)	[14]	Upper door sensor (PS13)
[15]	DF control board (DFCB)	-	-

1.4 PC-210 (Option)

1.4.1 Board/switch/sensor/others

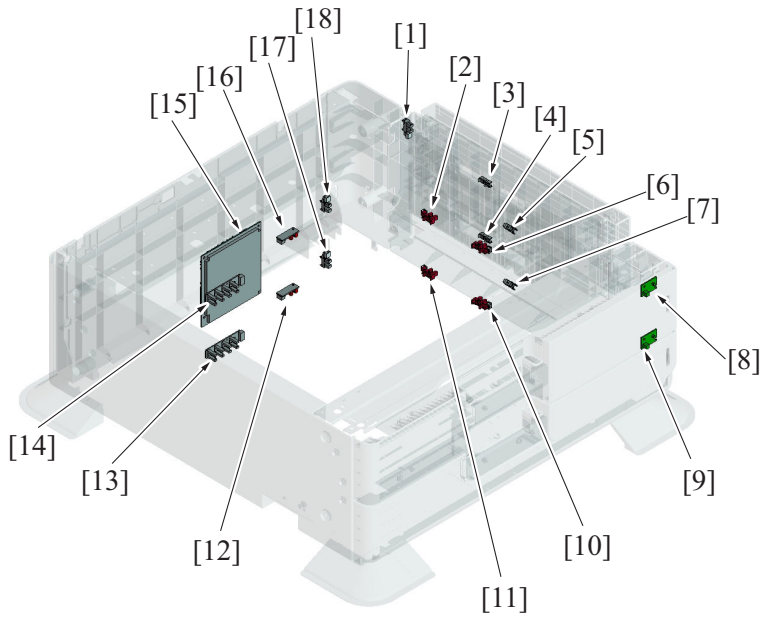

[1]	Right bottom door sensor (PS111)	[2]	Tray 3 upper limit sensor (PS116)
[3]	Tray 3 vertical transport sensor (PS113)	[4]	Tray 4 vertical transport sensor (PS123)
[5]	Tray 3 paper feed sensor (PS112)	[6]	Tray 3 paper empty sensor (PS114)
[7]	Tray 4 paper feed sensor (PS122)	[8]	Tray 3 paper empty indicator board (PEIB/3)
[9]	Tray 4 paper empty indicator board (PEIB/4)	[10]	Tray 4 paper empty sensor (PS124)
[11]	Tray 4 upper limit sensor (PS126)	[12]	Tray 4 CD paper size board (CDPSB/4)
[13]	Tray 4 FD paper size board (FDPSB/4)	[14]	Tray 3 FD paper size board (FDPSB/3)
[15]	PC control board (PCCB)	[16]	Tray 3 CD paper size board (CDPSB/3)
[17]	Tray 4 paper near empty sensor (PS125)	[18]	Tray3 paper near empty sensor (PS115)

1.4.2 Load

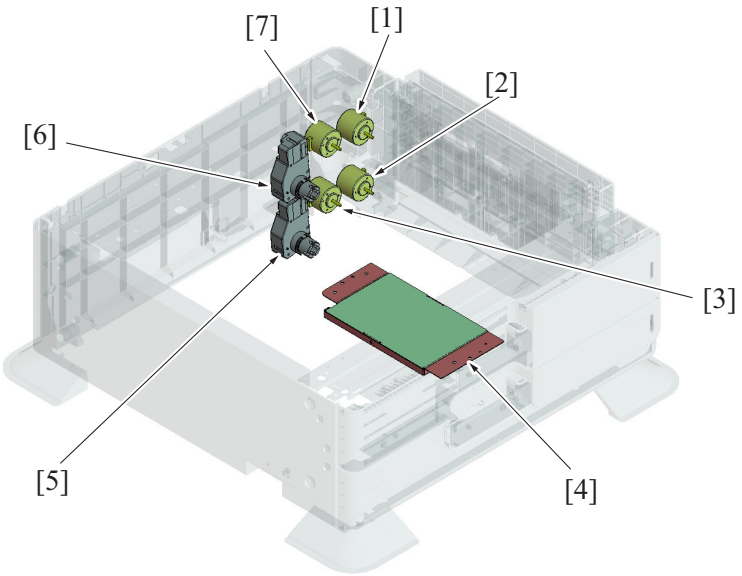

[1]	Tray 3 vertical transport motor (M112)	[2]	Tray 4 vertical transport motor (M122)
[3]	Tray 4 paper feed motor (M121)	[4]	PC dehumidifier heater (DH111)
[5]	Tray 4 lift-up motor (M123)	[6]	Tray 3 lift-up motor (M113)
[7]	Tray 3 paper feed motor (M111)	-	-

1.5 PC-410 (Option)

1.5.1 Board/switch/sensor/others

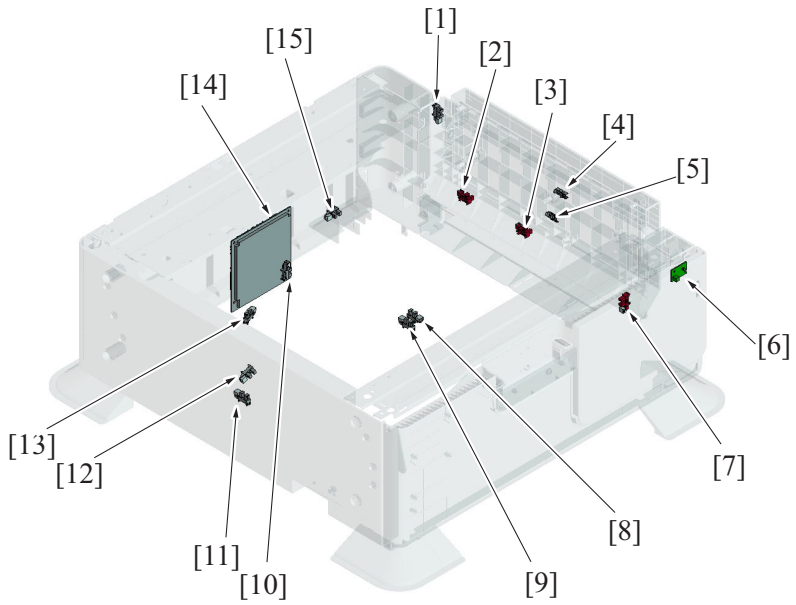

[1]	Right bottom door sensor (PS131)	[2]	Main tray upper limit sensor (PS136)
[3]	Main tray upper paper empty sensor (PS137)	[4]	Vertical transport sensor (PS133)
[5]	Paper feed sensor (PS132)	[6]	Tray3 paper empty indicator board (PEIB/3)
[7]	Cassette set sensor (PS143)	[8]	Main tray paper empty sensor (PS134)
[9]	Shifter stop / lower limit position sensor (PS138)	[10]	Division board sensor (PS142)
[11]	Shifter home sensor (PS139)	[12]	Sub tray paper empty sensor (PS140)
[13]	Sub tray paper remaining amount sensor (PS141)	[14]	PC control board (PCCB)
[15]	Main tray paper near empty sensor (PS135)	-	-

1.5.2 Load

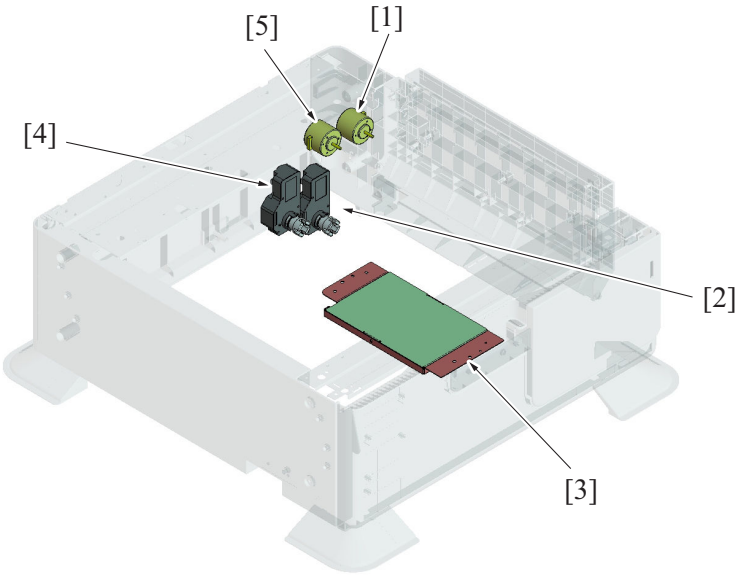

[1]	Vertical transport motor (M132)	[2]	Elevator motor (M134)
[3]	PC dehumidifier heater (DH111)	[4]	Shifter motor (M133)
[5]	Paper feed motor (M131)	-	-

1.6 JS-506 (Option)

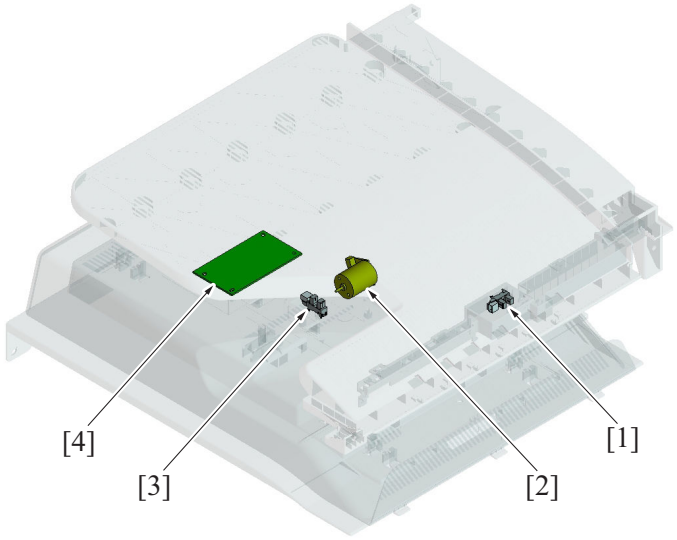

[1]	Exit tray1 full sensor (PS2)	[2]	Tray shift motor (M1)
[3]	Tray shift home sensor (PS1)	[4]	JS control board (JSCB)

1.7 FS-534 (Option)

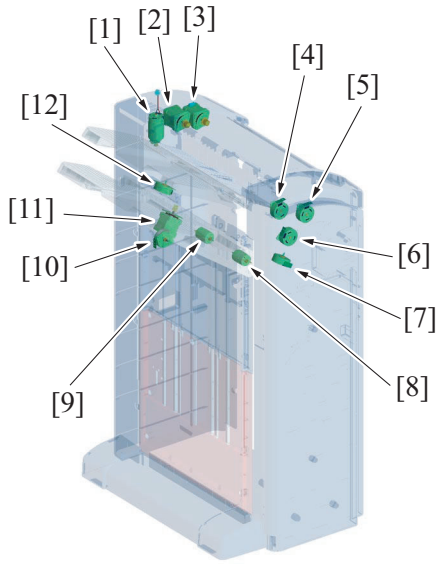

[1]	Main tray up/down motor (M11)	[2]	FNS discharge motor (M3)
[3]	FNS entry transport motor (M2)	[4]	FNS paddle motor (M5)
[5]	Receving roller retraction motor (M4)	[6]	Trailing edge stopper motor (M6)
[7]	Alignment motor/Front (M7)	[8]	Bundle eject motor (M10)
[9]	Pre-eject drive motor (M9)	[10]	Paper receiving control motor (M12)
[11]	Side stapler movement motor (M13)	[12]	Alignment motor/Rear (M8)

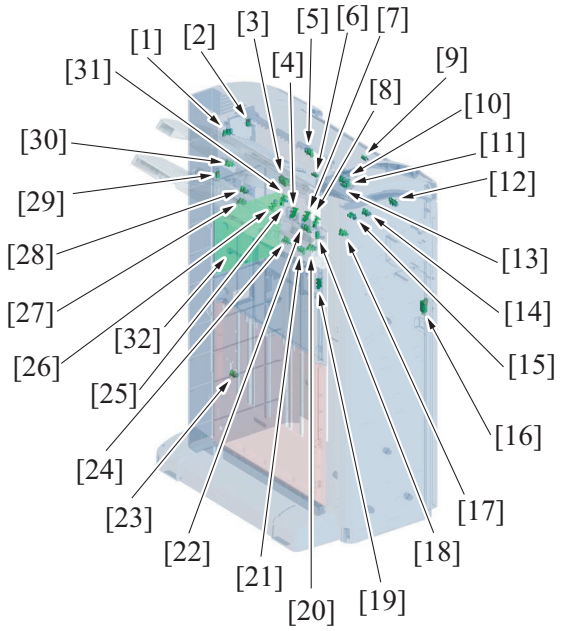

[1]	Stacker motor sensor (PS25)	[2]	Sub tray full detection sensor/out (PS9)
[3]	Main tray upper position detect switch (SW2)	[4]	Pre-eject away sensor (PS22)
[5]	Sub tray exit sensor (PS8)	[6]	Main tray exit sensor (PS16)
[7]	Pre-eject home sensor (PS21)	[8]	Trailing edge stopper home position detection sensor (PS20)
[9]	FNS entrance sensor (PS4)	[10]	Upper cover open/close detection sensor (PS32)
[11]	Sub tray full detection sensor/in (PS10)	[12]	Exchange folded paper output sensor(PS30)
[13]	Saddle exit sensor (PS5)	[14]	Receving roller retraction sensor (PS11)
[15]	Upper paddle home position detection sensor (PS14)	[16]	Front door open detect switch (SW1)
[17]	Alignment plate/F home sensor (PS12)	[18]	Main tray upper sensor/in (PS7)
[19]	Paper delivery control sensor (PS28)	[20]	Stapler position sensor (Center) (PS24)
[21]	Gripper motor sensor (PS17)	[22]	Main tray upper position sensor/F (PS27)
[23]	Main tray full detection sensor (PS29)	[24]	Pre-eject encorder sensor (PS15)
[25]	Staple stacker paper detection sensor (PS31)	[26]	Gripper position detection sensor (PS19)
[27]	Stapler home position sensor (Rear) (PS23)	[28]	Main tray upper position sensor/R (PS26)
[29]	Main tray upper sensor/out (PS6)	[30]	Alignment plate/R home sensor (PS13)
[31]	Gripper home position sensor (PS18)	[32]	FS control board (FSCB)

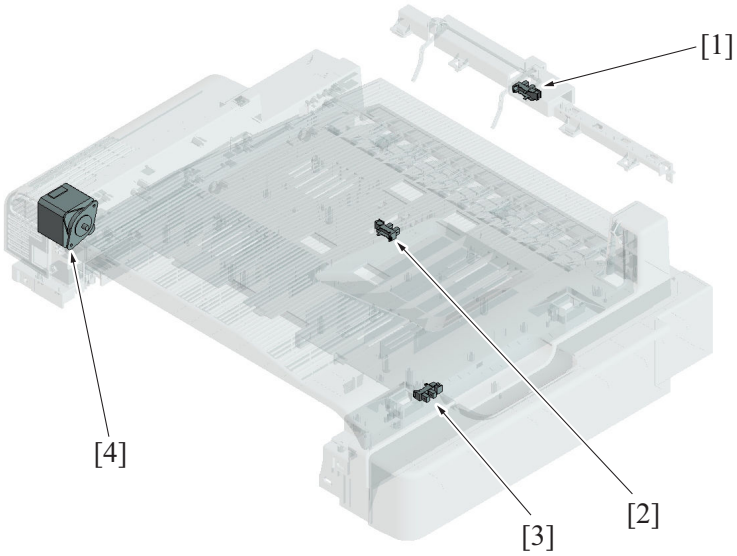

[1]	3rd exit tray full sensor (PS1)	[2]	RU entrance sensor (PS2)
[3]	RU cover open/close detection sensor (PS3)	[4]	RU transport motor (M1)

1.8 PK-520 (Option)

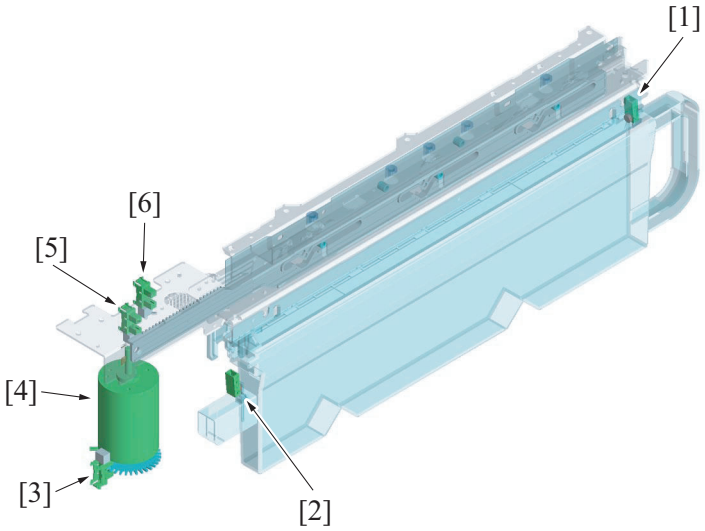

[1]	Punch dust full sensor/out (PS4)	[2]	Punch dust full sensor/in (PS5)
[3]	Punch motor sensor (PS3)	[4]	Punch drive motor (M1)
[5]	Punch position sensor (PS2)	[6]	Punch home sensor (PS1)

1.9 SD-511 (Option)

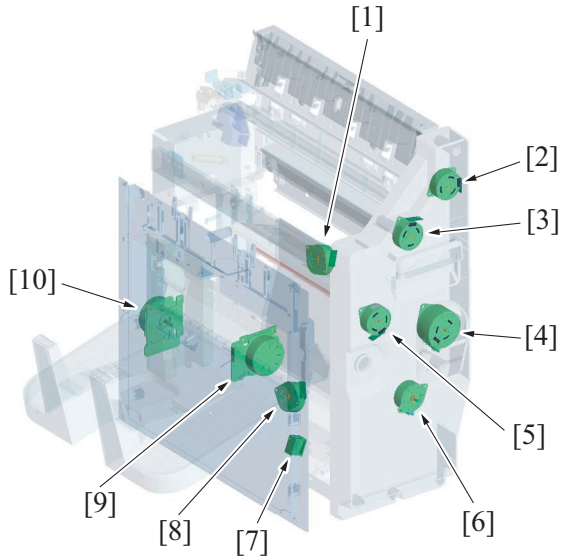

[1]	Alignment motor (M3)	[2]	SD transport motor (M1)
[3]	Paper discharge control motor (M2)	[4]	Center fold guide motor (M8)
[5]	Tri-folding guide motor (M6)	[6]	SD paddle motor (M7)
[7]	Stopper solenoid (SD1)	[8]	Stopper drive motor (M4)
[9]	Center fold knife motor (M9)	[10]	Center fold roller motor (M5)

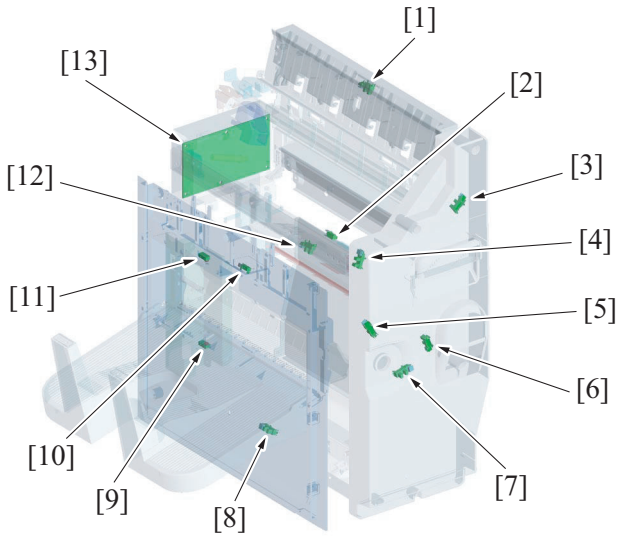

[1]	SD entrance sensor (PS1)	[2]	Center staple/fold stacker paper detect sensor (PS3)
[3]	Curl cover detection sensor (PS2)	[4]	Alignment home sensor (PS4)
[5]	Tri-folding gate home sensor (PS11)	[6]	Guide home sensor (PS7)
[7]	Paddle home sensor (PS5)	[8]	Stopper home sensor (PS6)
[9]	Booklet tray empty detection sensor/out (PS14)	[10]	Fold exit sensor (PS12)
[11]	Booklet tray empty detection sensor/in (PS13)	[12]	Center fold knife home sensor (PS8)
[13]	SD drive board (SDDB)	-	-

1.10 FS-533 (Option)

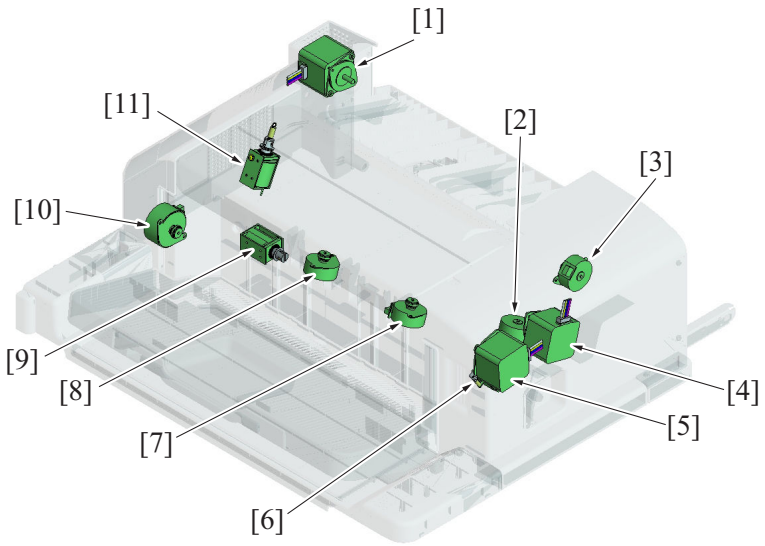

[1]	Paper conveyance motor (M101)	[2]	Stapler movement motor (M107)
[3]	Alignment roller motor (M103)	[4]	Paper exit motor (M102)
[5]	Exit roller lift up motor (M104)	[6]	Paper exit roller solenoid (SD103)
[7]	Alignment motor/F (M105)	[8]	Alignment motor/R (M106)
[9]	Paper surface detect solenoid (SD101)	[10]	Tray lift up motor (M109)
[11]	Batch solenoid (SD102)		

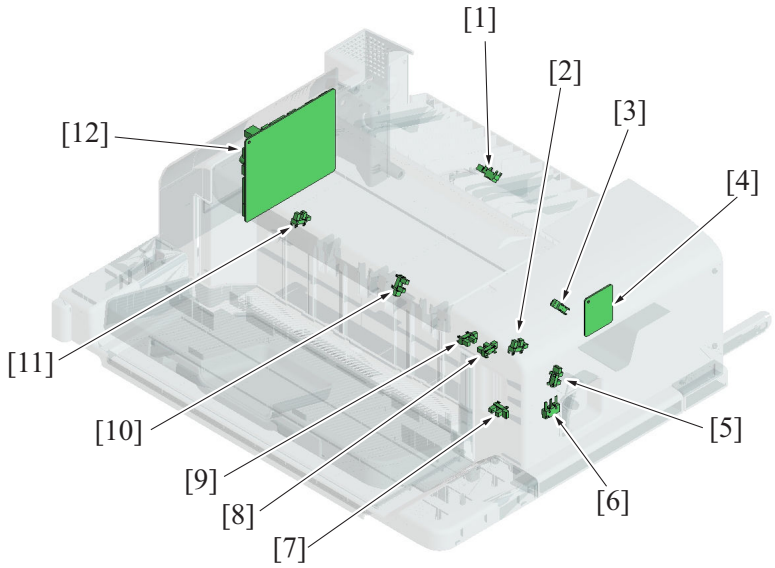

[1]	Paper feed sensor (PS101)	[2]	Alignment plate home sensor/F (PS108)
[3]	Pick up roller position sensor (PS105)	[4]	Stapler relay board (STREYB)
[5]	Stapler home sensor (PS110)	[6]	Finisher lock switch (SW1)
[7]	Paper exit tray home sensor (PS107)	[8]	Paper surface detect sensor/2 (PS104)
[9]	Paper weight lever sensor (PS103)	[10]	Paper surface detect sensor/1 (PS102)
[11]	Alignment plate home sensor/R (PS109)	[12]	FS control board (FSCB)

1.11 PK-519 (Option)

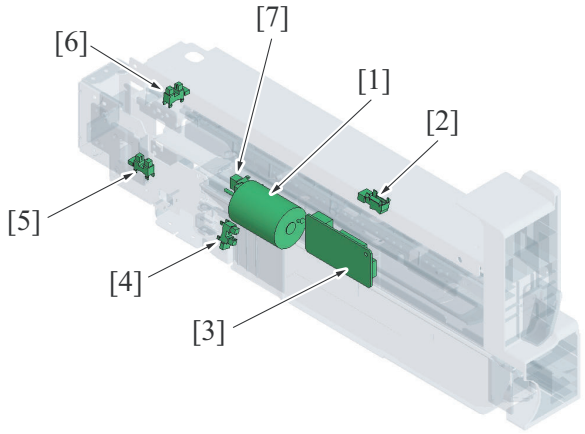

[1]	Punch motor (M201)	[2]	Paper feed sensor (PS201)
[3]	PK control board (PKCB)	[4]	Punch dust full sensor (PS205)
[5]	Puncher drive cam sensor (PS203)	[6]	Puncher home sensor (PS204)
[7]	Punch motor sensor (PS202)	-	-

2. CONNECTOR LAYOUT DRAWING

2.1 BOARD CONNECTOR LAYOUT DRAWING

2.1.1 bizhub 364e/284e/224e

(1) Printer control board (PRCB)

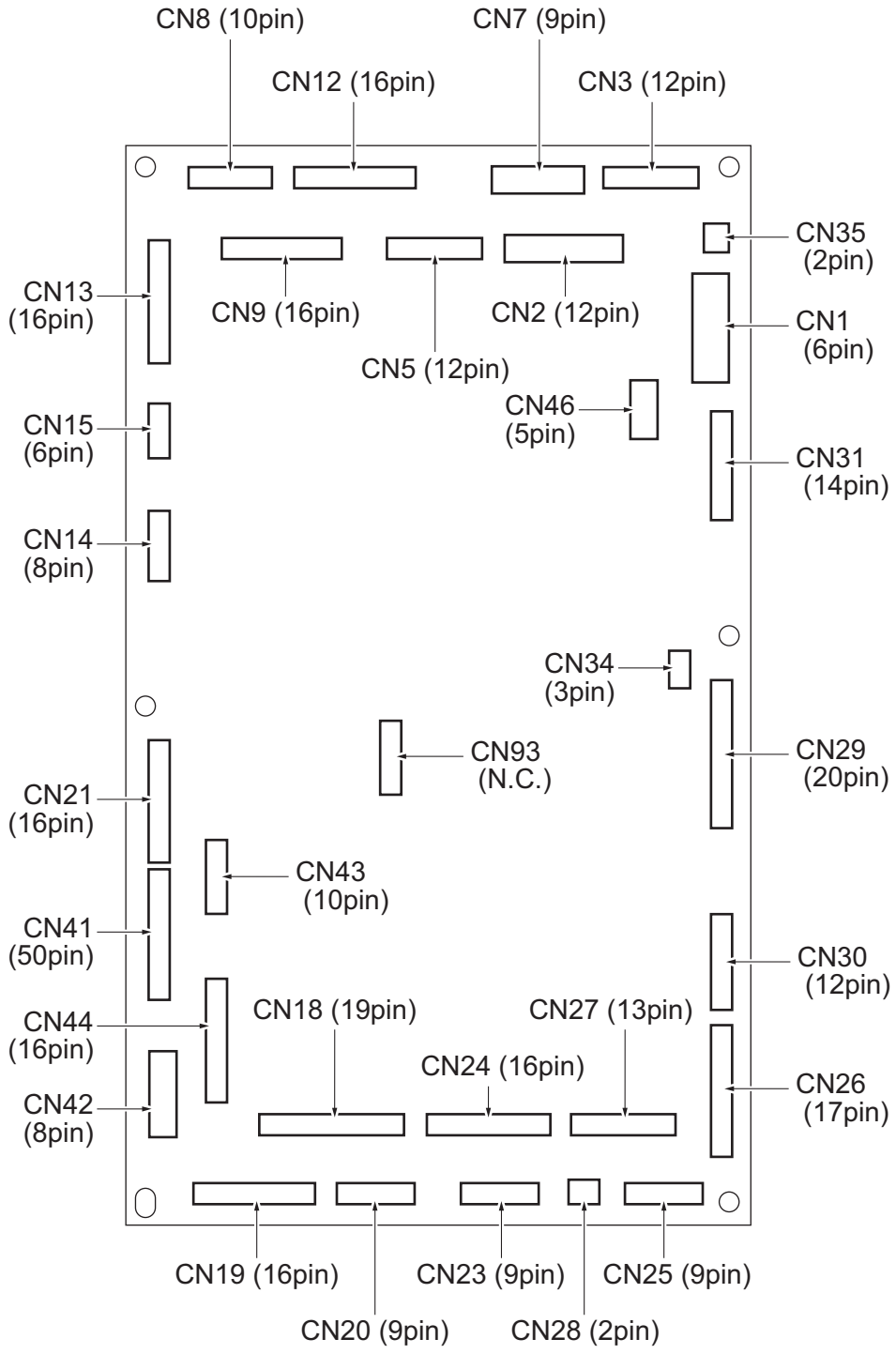

(2) MFP board (MFPB)

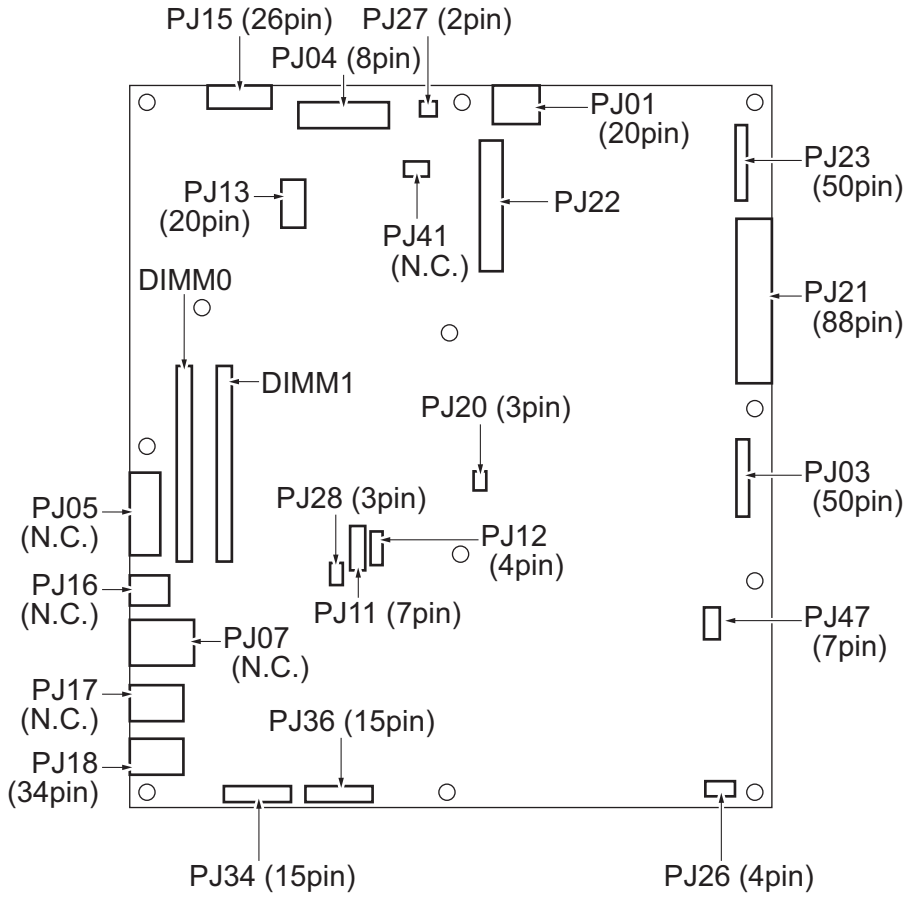

(3) Front side board (FRB)

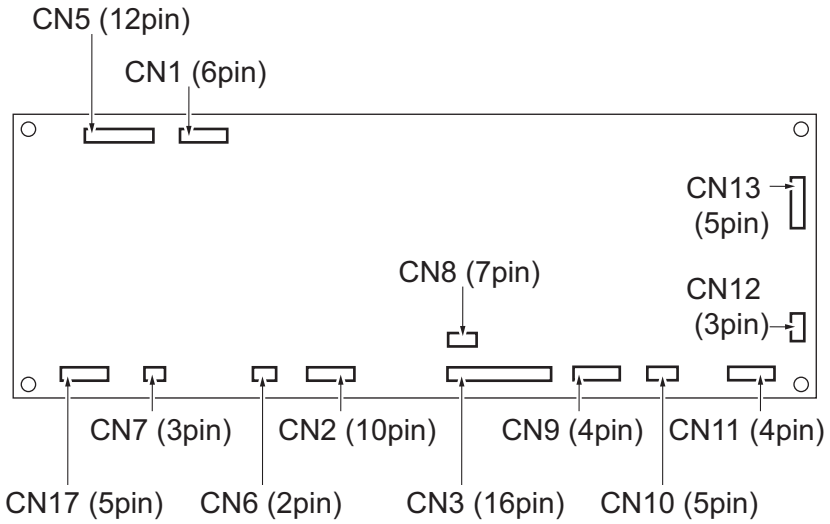

(4) PH relay board (PHRYB)

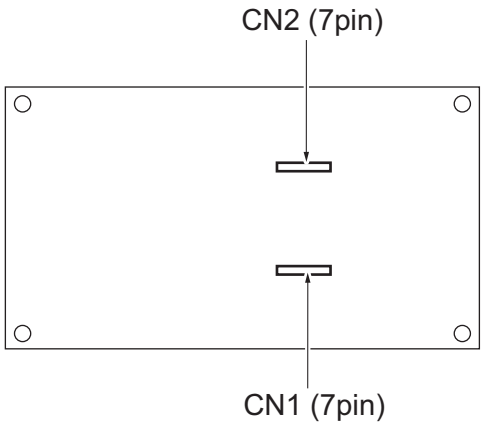

(5) Scanner drive board (SCDB)

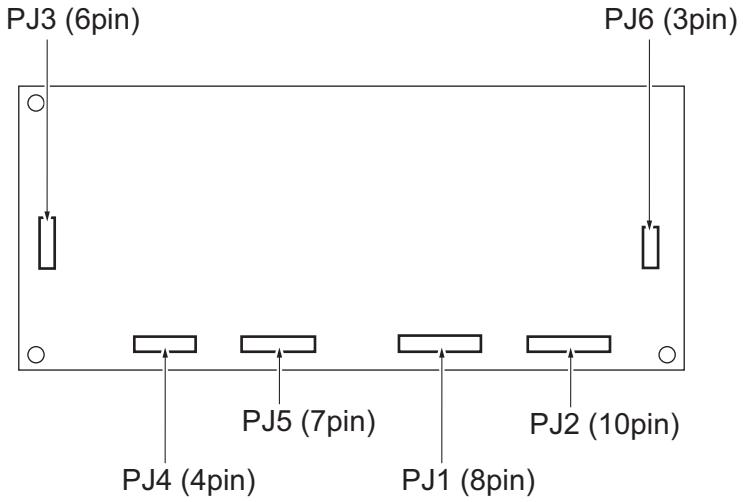

(6) ERP board (ERPB)

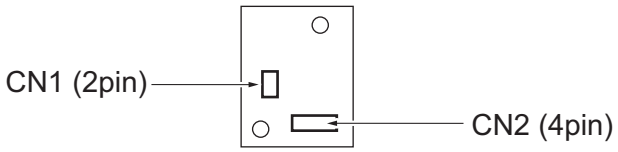

(7) LED control board (LEDCB)

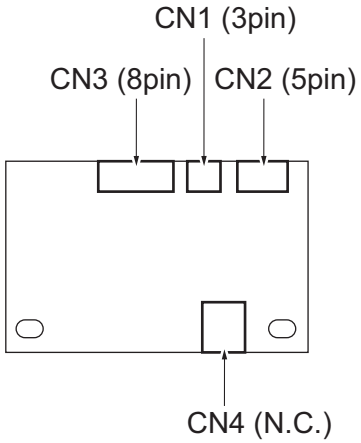

(8) LED board (LEDB)

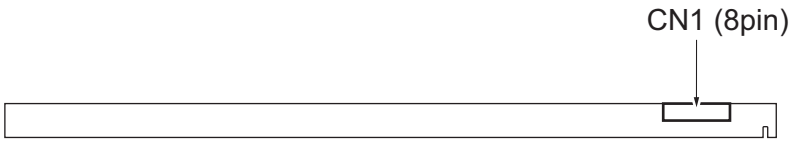

(9) DC power supply (DCPU)

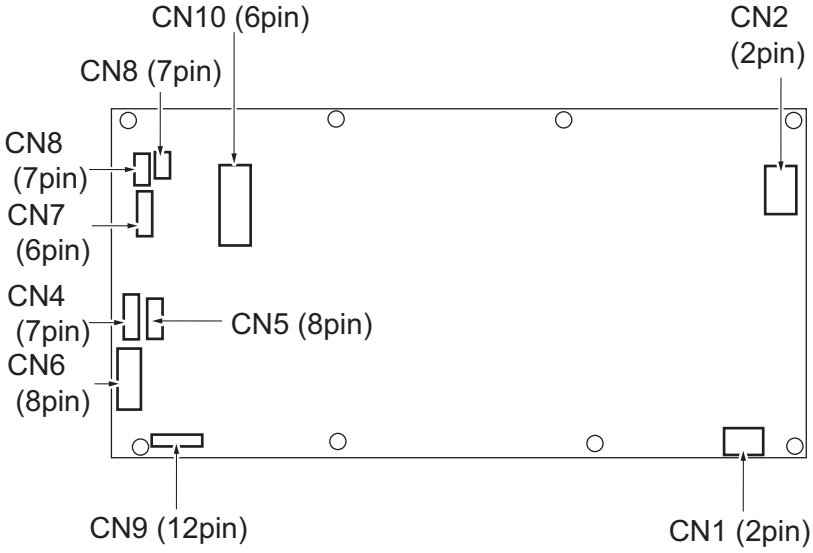

(10) High voltage unit (HV)

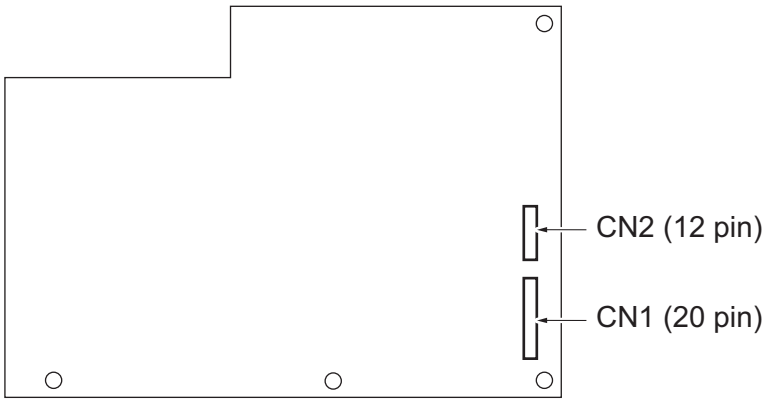

2.1.2 DF control board (DFCB)

(1) DF-701

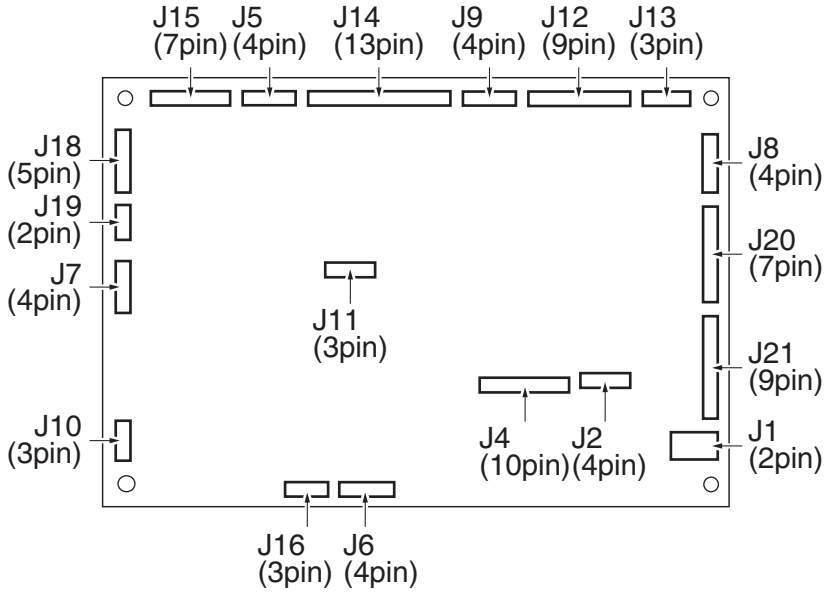

(2) DF-624

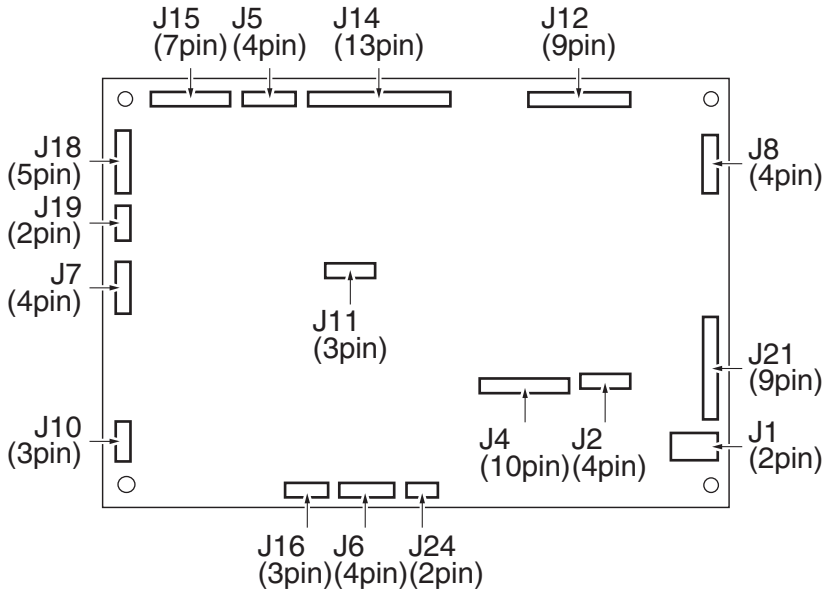

2.1.3 Dual scan image processing board (DSIPB)

(1) DF-701

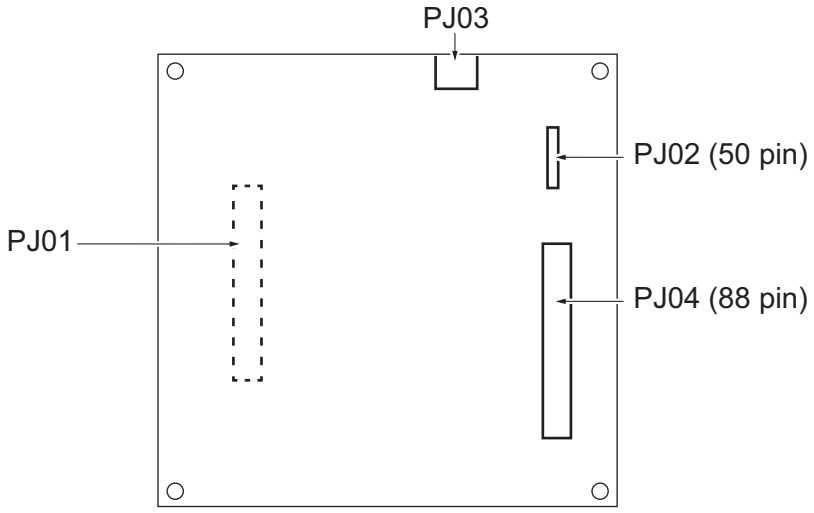

2.1.4 PC control board (PCCB)

(1) PC-110

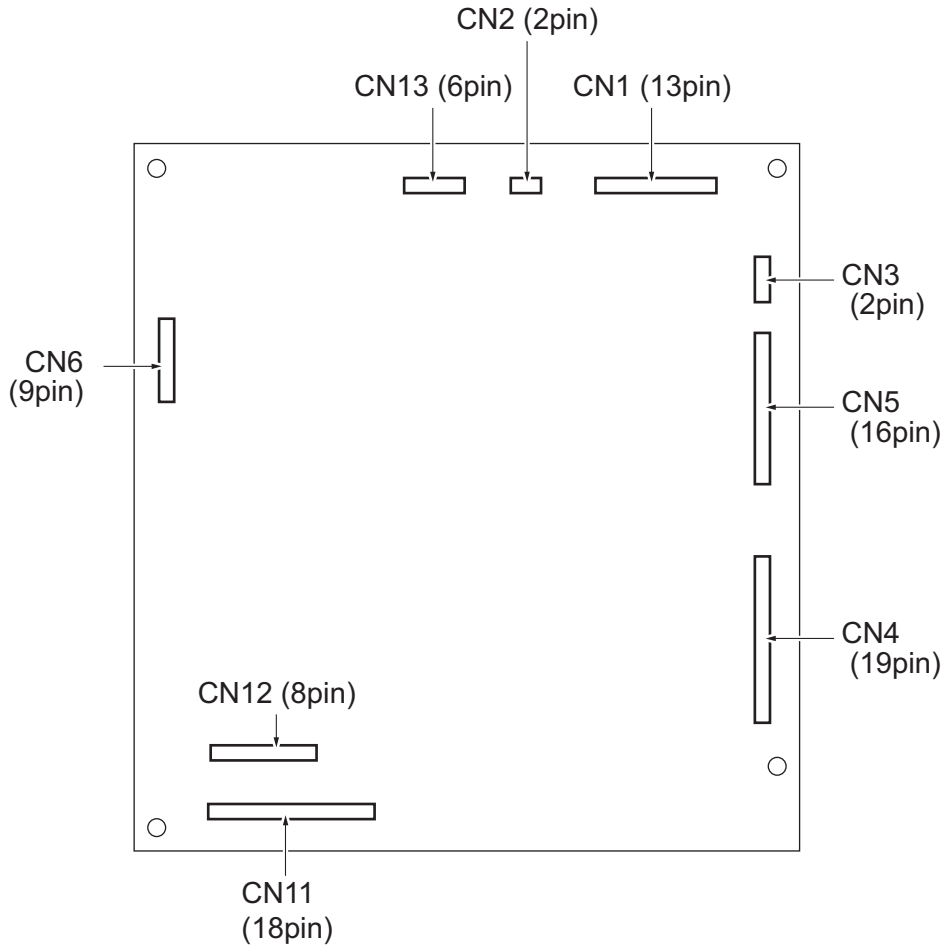

(2) PC-210

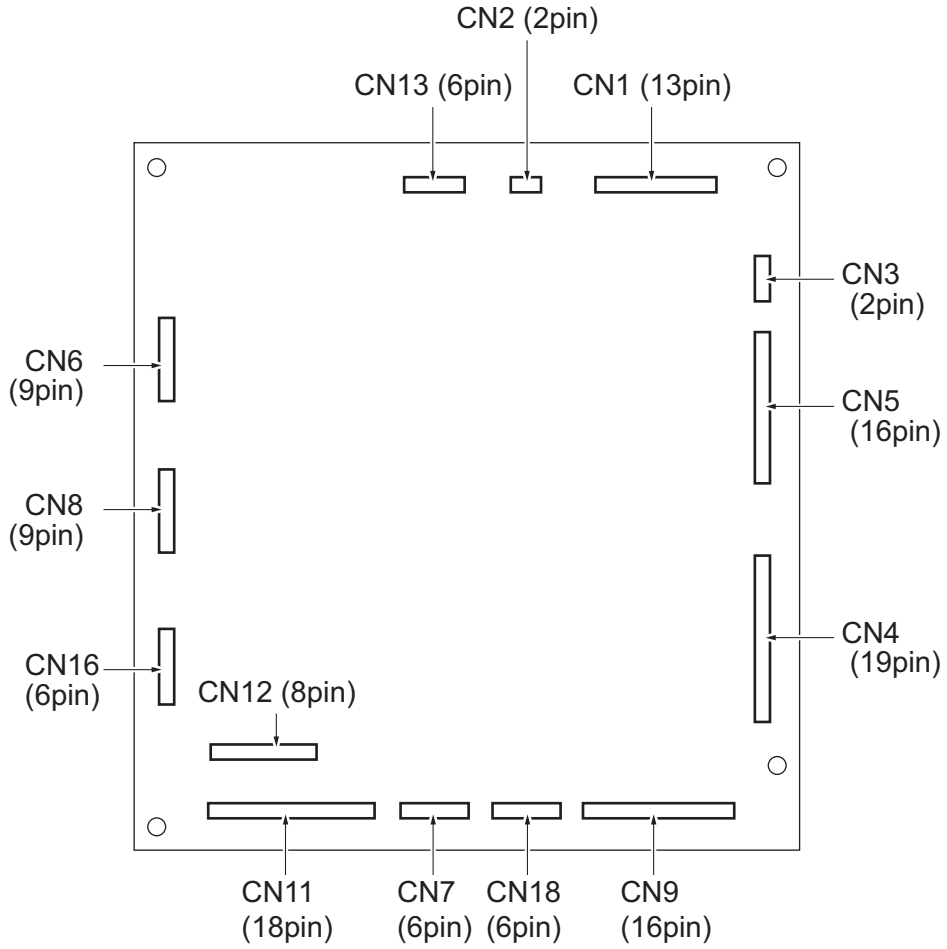
CN2 (2pin)
CN13 (6pin)
CN1 (13pin)
CN3 (2pin)
CN6 (9pin)
CN5 (16pin)
CN8 (9pin)
CN4 (19pin)
CN16 (6pin)
CN12 (8pin)
CN11 (18pin)
CN7 (6pin)
CN18 (6pin)
CN9 (16pin)

(3) PC-410

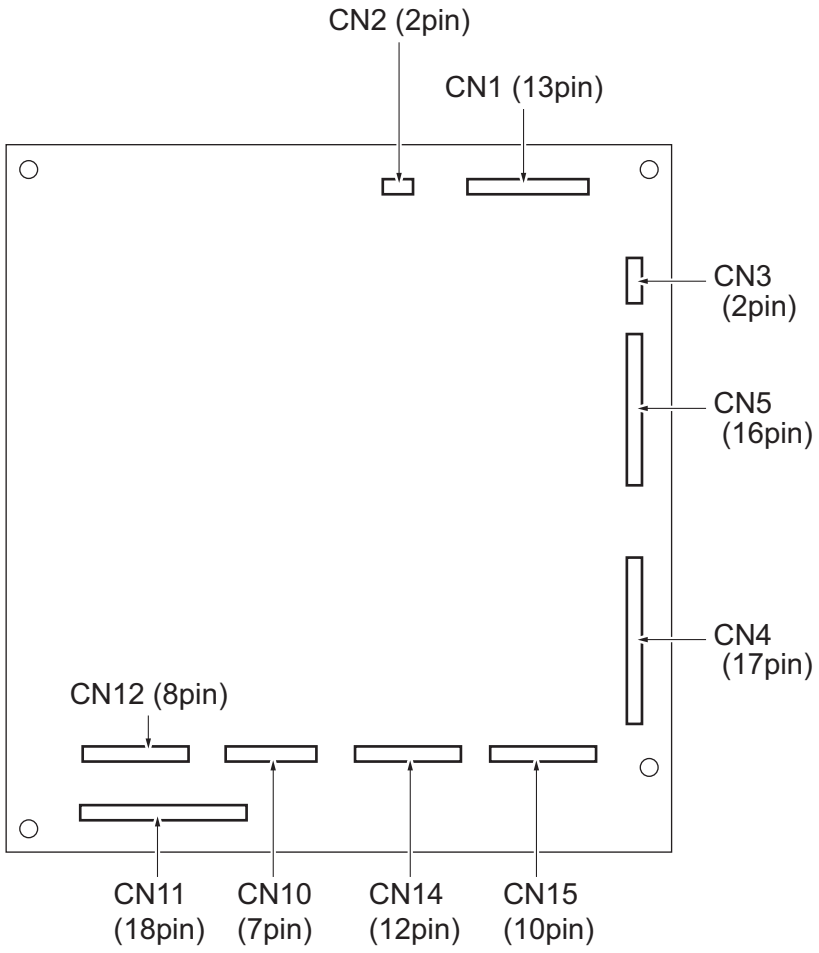

2.1.5 JS control board (JSCB)

(1) JS-506

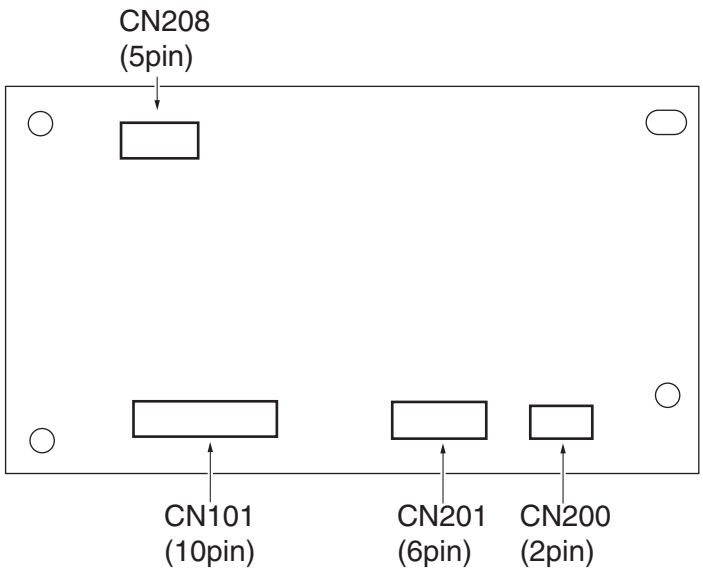

2.1.6 FS control board (FSCB)

(1) FS-533

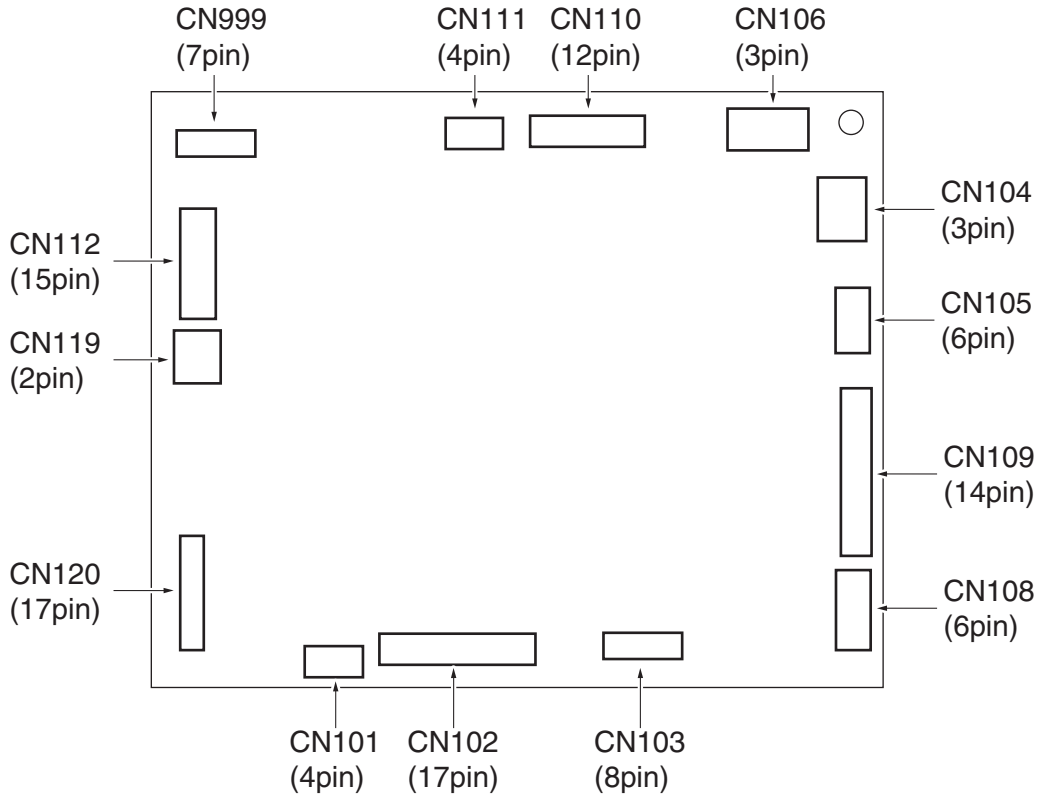

(2) FS-534

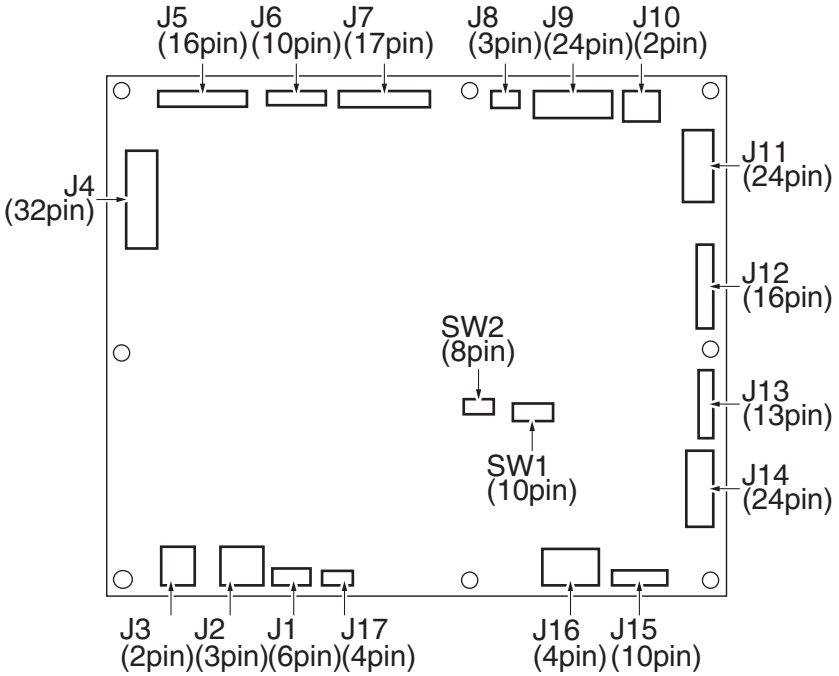

2.1.7 SD drive board (SDDB)

(1) SD-511

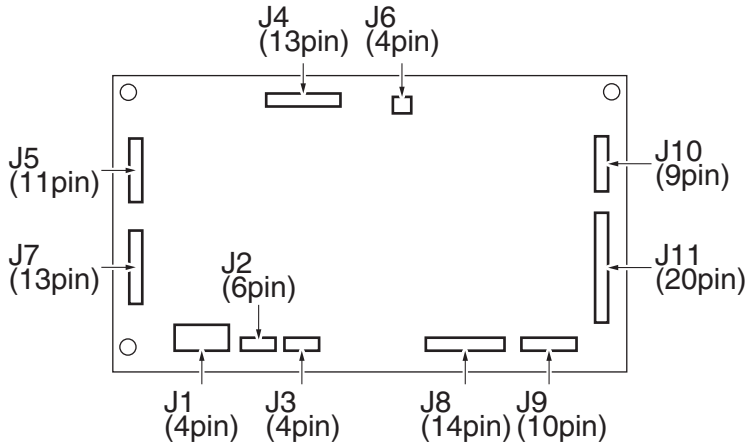

2.1.8 Stapler relay board (STREYB)

(1) FS-533

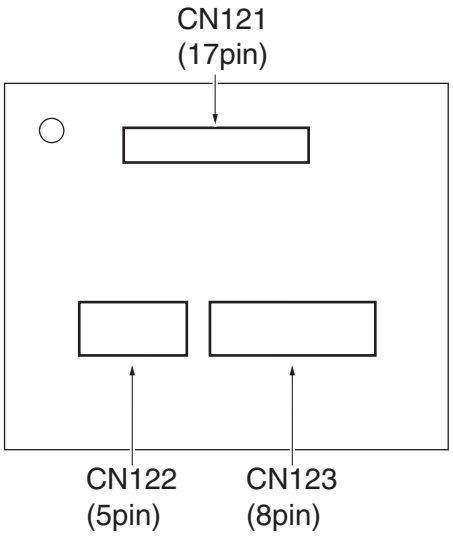

2.1.9 PK control board (PKCB)

(1) PK-519

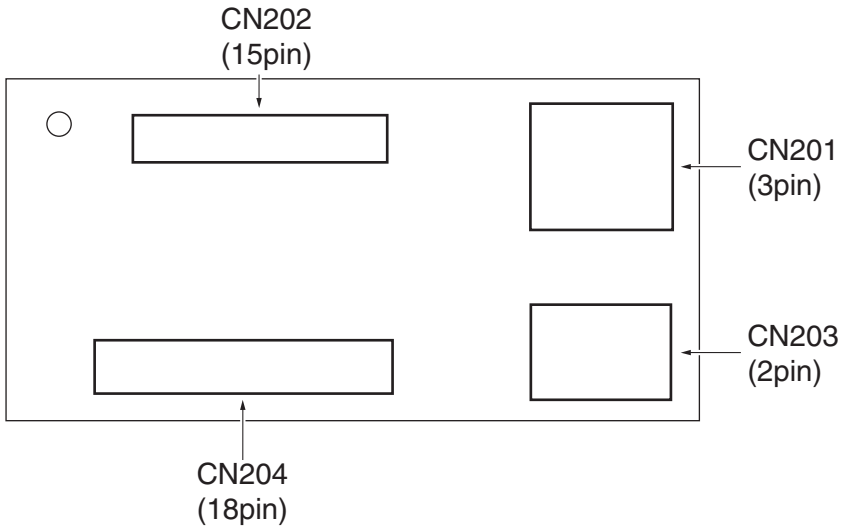

2.2 RELAY CONNECTOR LAYOUT DRAWING

2.2.1 bizhub 364e/284e/224e

(1) Main body

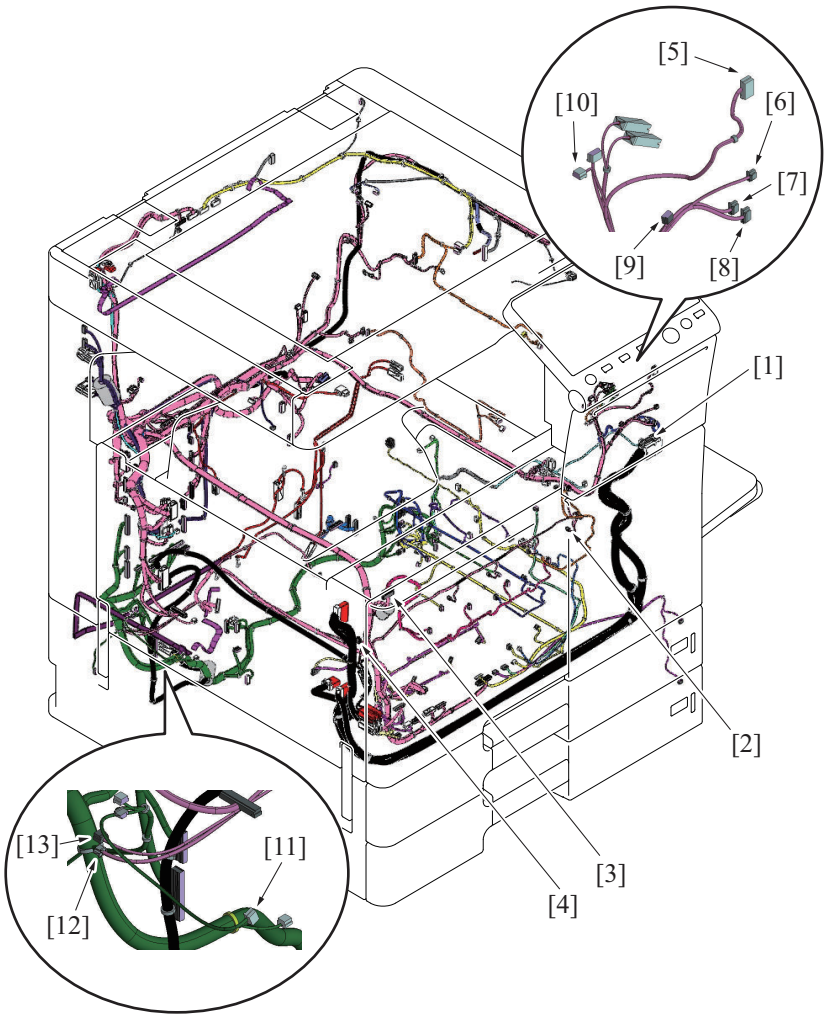

No.	CN No.	Pin	Location	No.	CN No.	Pin	Location
[1]	CN1FIX	3 Pin	27~28-C	[2]	CN180	3 Pin	8-K
[3]	CN151	12 Pin	10-K	[4]	CN115	3 Pin	23-C
[5]	CN613	2 Pin	18-Q	[6]	CN104	3 Pin	27-C
[7]	CN99	4 Pin	27-C	[8]	CN98	5 Pin	26-C
[9]	CN156	2 Pin	2-Q	[10]	CN108	2 Pin	25-C
[11]	CN26	3 Pin	6-D	[12]	CN63	3 Pin	14-D
[13]	CN64	2 Pin	7-D	-	-	-	-

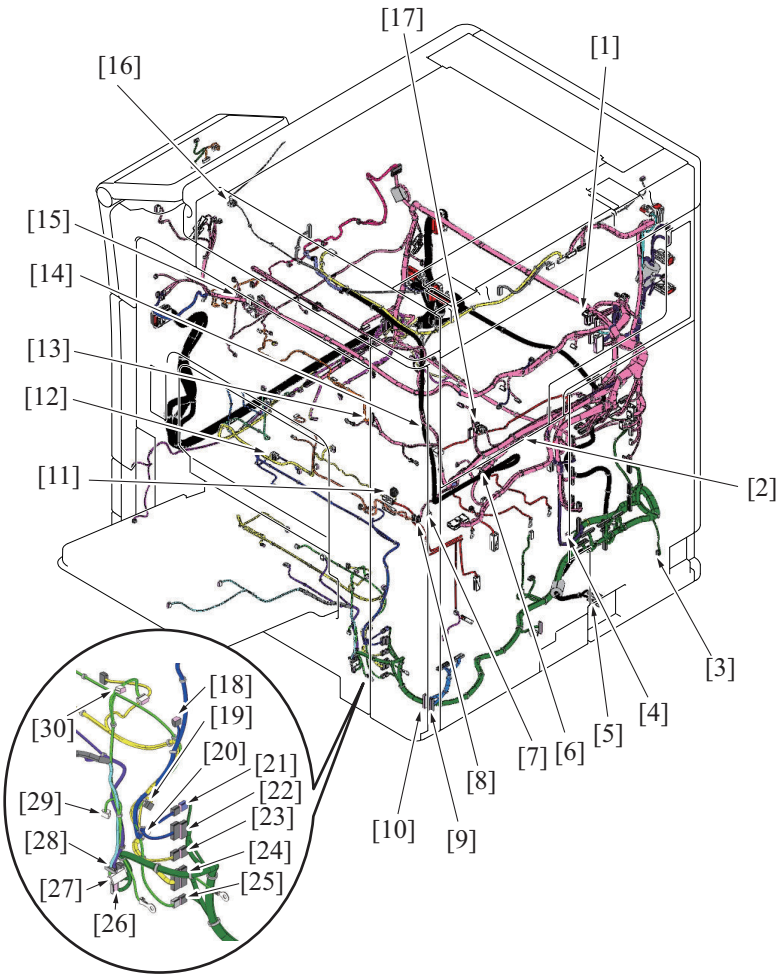

No.	CN No.	Pin	Location	No.	CN No.	Pin	Location
[1]	CN125	4 Pin	19-C	[2]	CN157	3 Pin	26-C
[3]	CN158	3 Pin	5-C	[4]	CN29	2 Pin	7-D
[5]	CN1AC	2 Pin	17-X	[6]	CN159	2 Pin	24-C
[7]	CN12	2 Pin	25-C	[8]	CN9	6 Pin	18-D
[9]	CN154	15 Pin	4~7-U	[10]	CN155	15 Pin	6-U
[11]	CN73	2 Pin	4-K	[12]	CN72	2 Pin	4-K
[13]	CN5	10 Pin	18-D	[14]	CN142	2 Pin	22-C
[15]	CN126	4 Pin	19-C	[16]	CN603	2 Pin	24-P
[17]	CN106	3 Pin	26-C	[18]	CN33	2 Pin	9-C
[19]	CN44	2 Pin	10-C	[20]	CN43	2 Pin	10-C
[21]	CN34	3 Pin	8-D	[22]	CN30	8 Pin	7-D
[22]	CN37	4 Pin	10-D	[24]	CN40	10 Pin	9-D
[25]	CN152	3 Pin	8-D	[26]	CN19	7 Pin	4-D
[27]	CN13	6 Pin	4-D	[28]	CN16	6 Pin	3-D
[29]	CN21	2 Pin	4-C	[30]	CN20	2 Pin	3-C

M TIMING CHART

1. bizhub 364e/284e/224e

1.1 Timing chart when the main power switch is turned ON

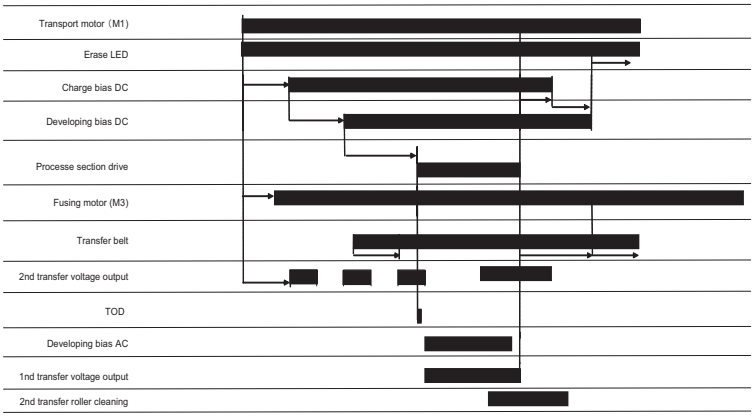

2. FS-534/SD-511

2.1 Shift mode

2.1.1 Operating conditions

Paper size	A4 or 8 $^1/_2$ x 11
Sheet of original	2 originals
Type of original	1-side

2.1.2 Timing chart

Horizontal transport unit

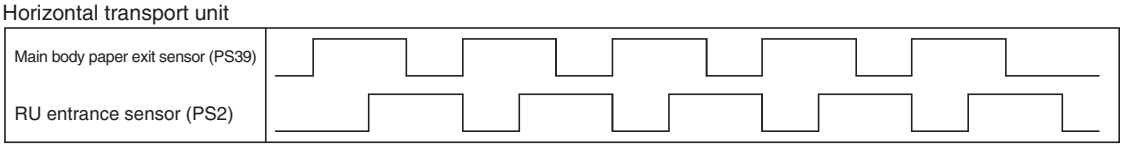

Sub tray

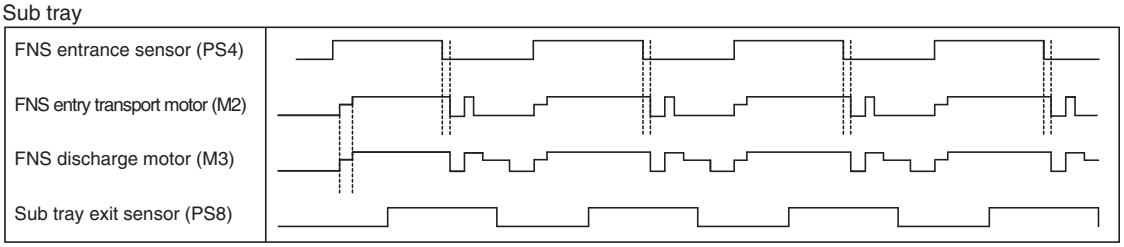

Main tray/Saddle tray

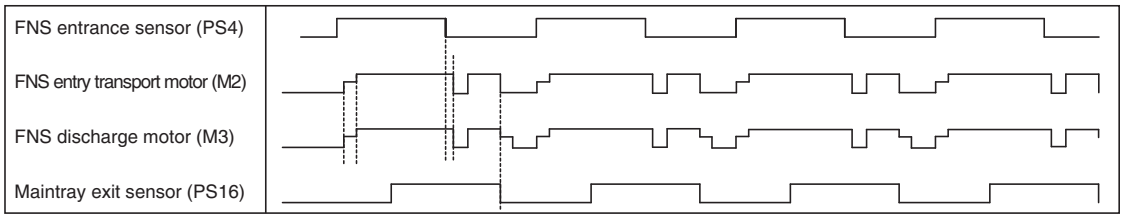

2.2 Center staples mode

2.2.1 Operating conditions

Paper size	A4S or 8 $^1/_2$ x 11S
Sheet of original	2 originals
Type of original	1-side

2.2.2 Timing chart

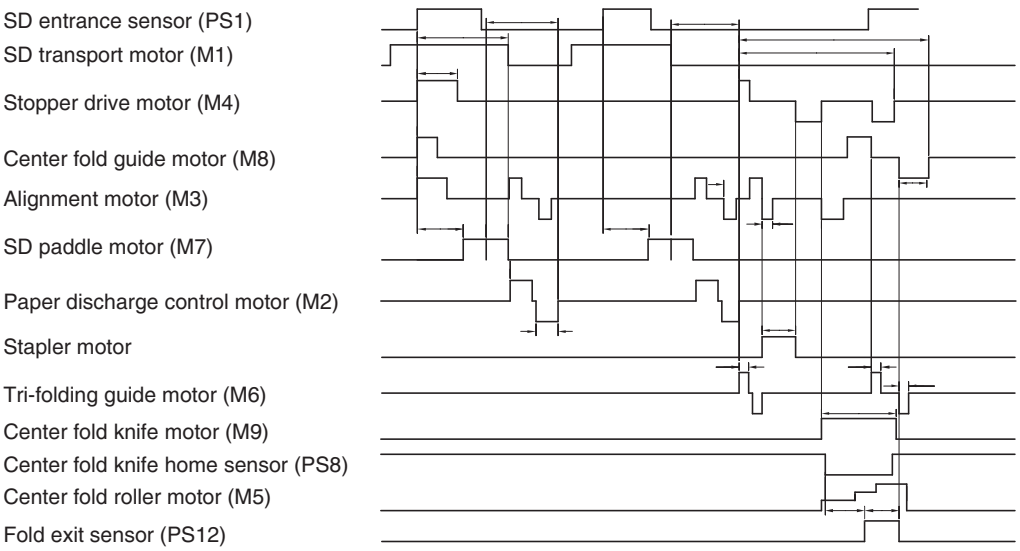

N WIRING DIAGRAM

1. bizhub 364e/284e/224e

1.1 Main body

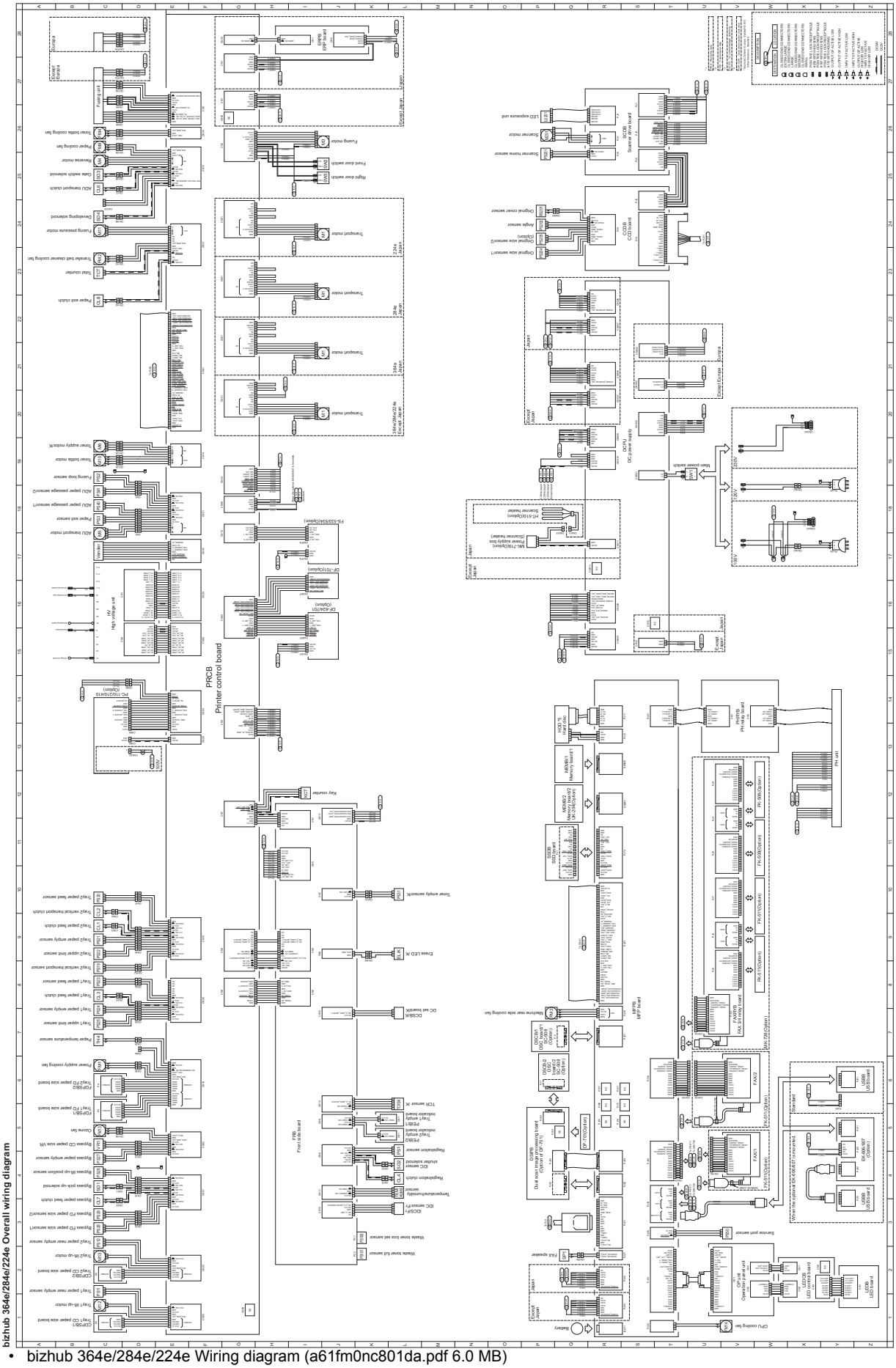
bizhub 364e/284e/224e Overall wiring diagram
PRCB
Printer control board
HV
High voltage unit
Except Europe
Except Japan
Europe
Japan
Except Europe
Except Japan
Except Europe
Except Japan
Except Japan
Except Japan

- bizhub 364e/284e/224e Wiring diagram A3 size (1/4) (a61fm0nc814da.pdf 0.7 MB)
- bizhub 364e/284e/224e Wiring diagram A3 size (2/4) (a61fm0nc824da.pdf 0.7 MB)
- bizhub 364e/284e/224e Wiring diagram A3 size (3/4) (a61fm0nc834da.pdf 0.7 MB)
- bizhub 364e/284e/224e Wiring diagram A3 size (4/4) (a61fm0nc844da.pdf 0.7 MB)

2. Option

2.1 DF-701

2.1.1 DF-701

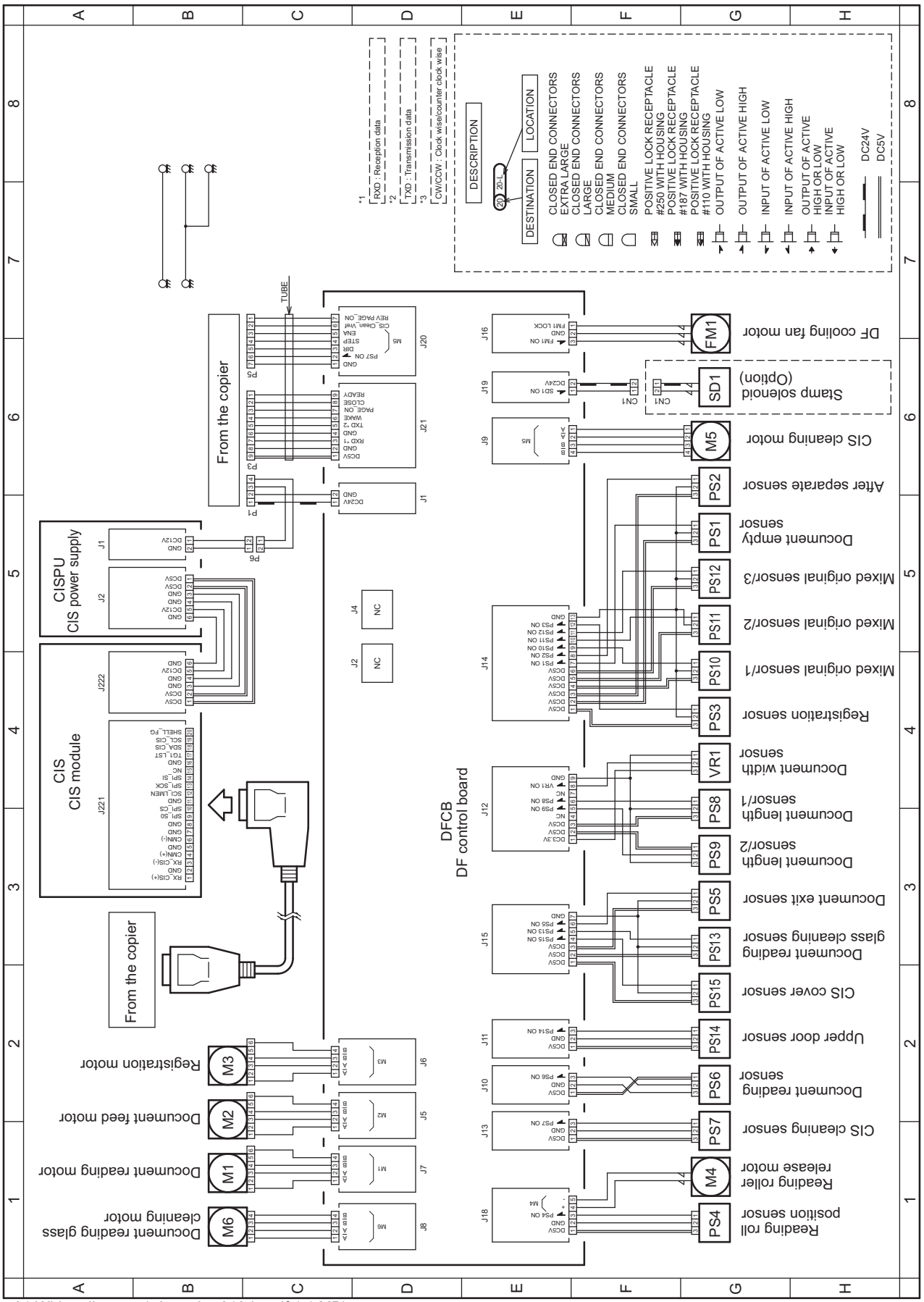

- DF-701 Wiring diagram (a3cem0nc810da.pdf 1.1 MB)

2.2 DF-624

2.2.1 DF-624

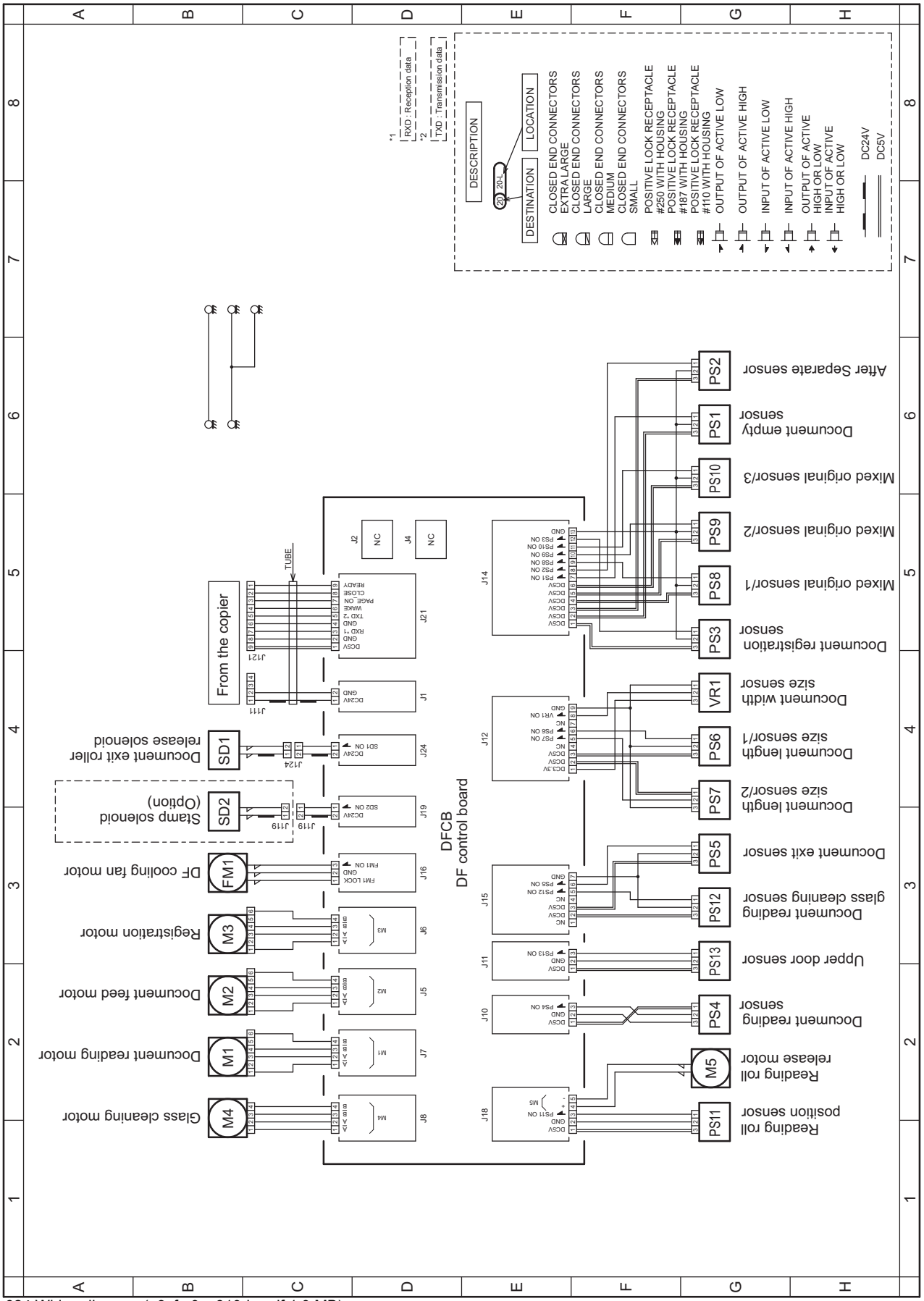

- DF-624 Wiring diagram (a3cfm0nc810da.pdf 1.0 MB)

2.3 PC-110

2.3.1 PC-110

PC-110 Overall wiring diagram

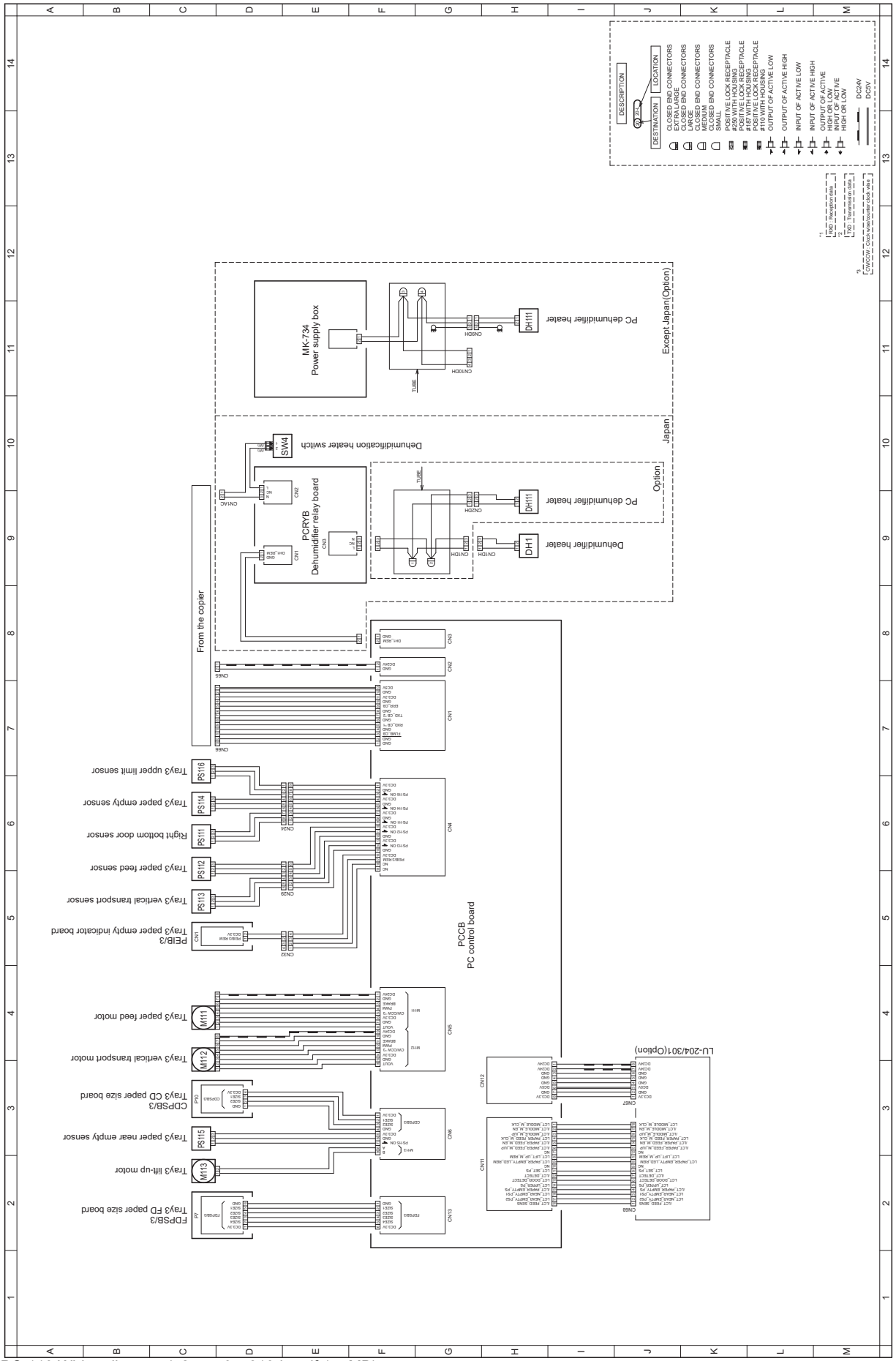

- PC-110 Wiring diagram (a2xmm0nc810da.pdf 1.4 MB)

2.4 PC-210

2.4.1 PC-210

PC-210 Overall wiring diagram

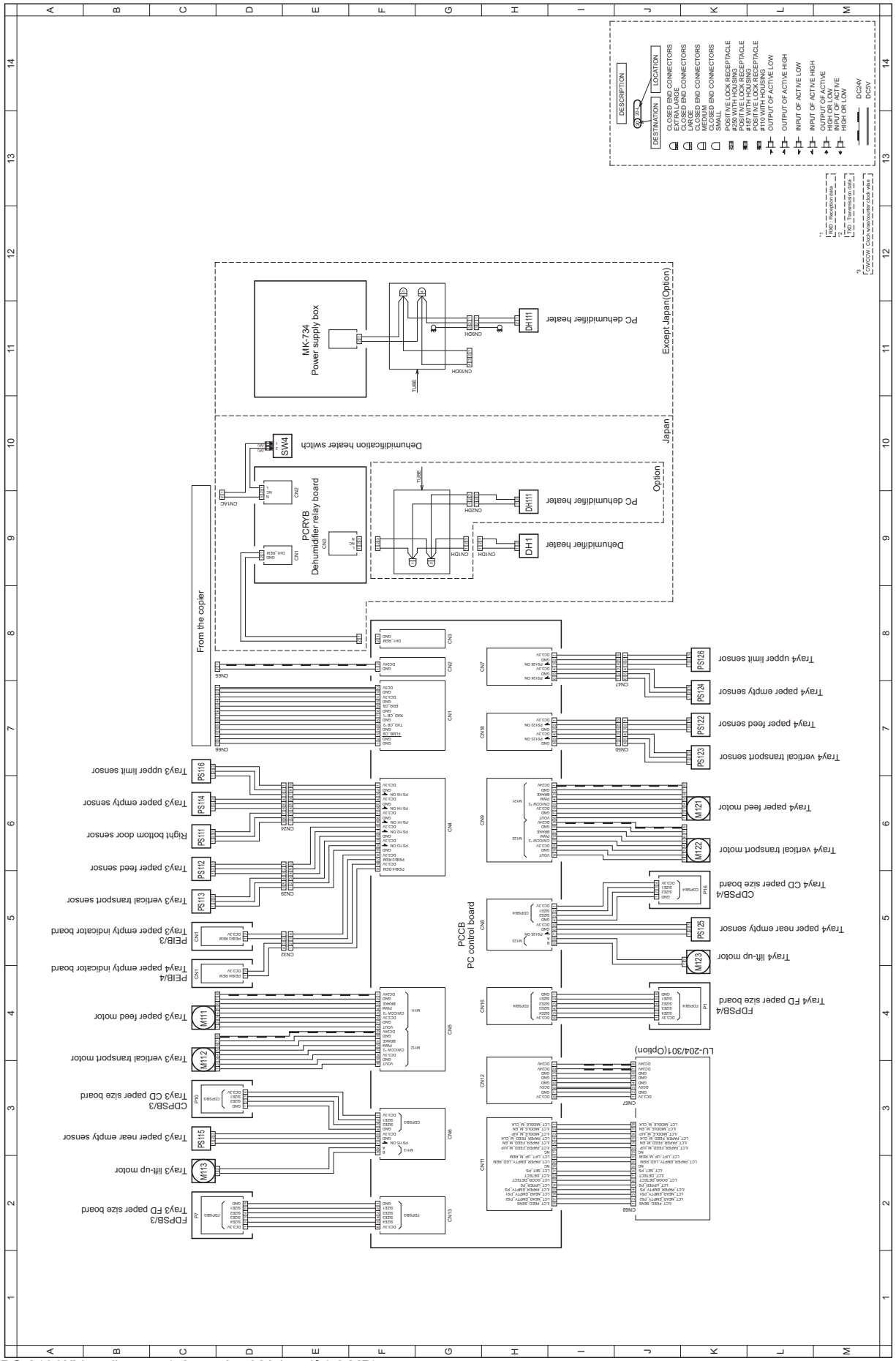

- PC-210 Wiring diagram (a2xmm0nc820da.pdf 1.6 MB)

2.5 PC-410

2.5.1 PC-410

PC-410 Overall wiring diagram

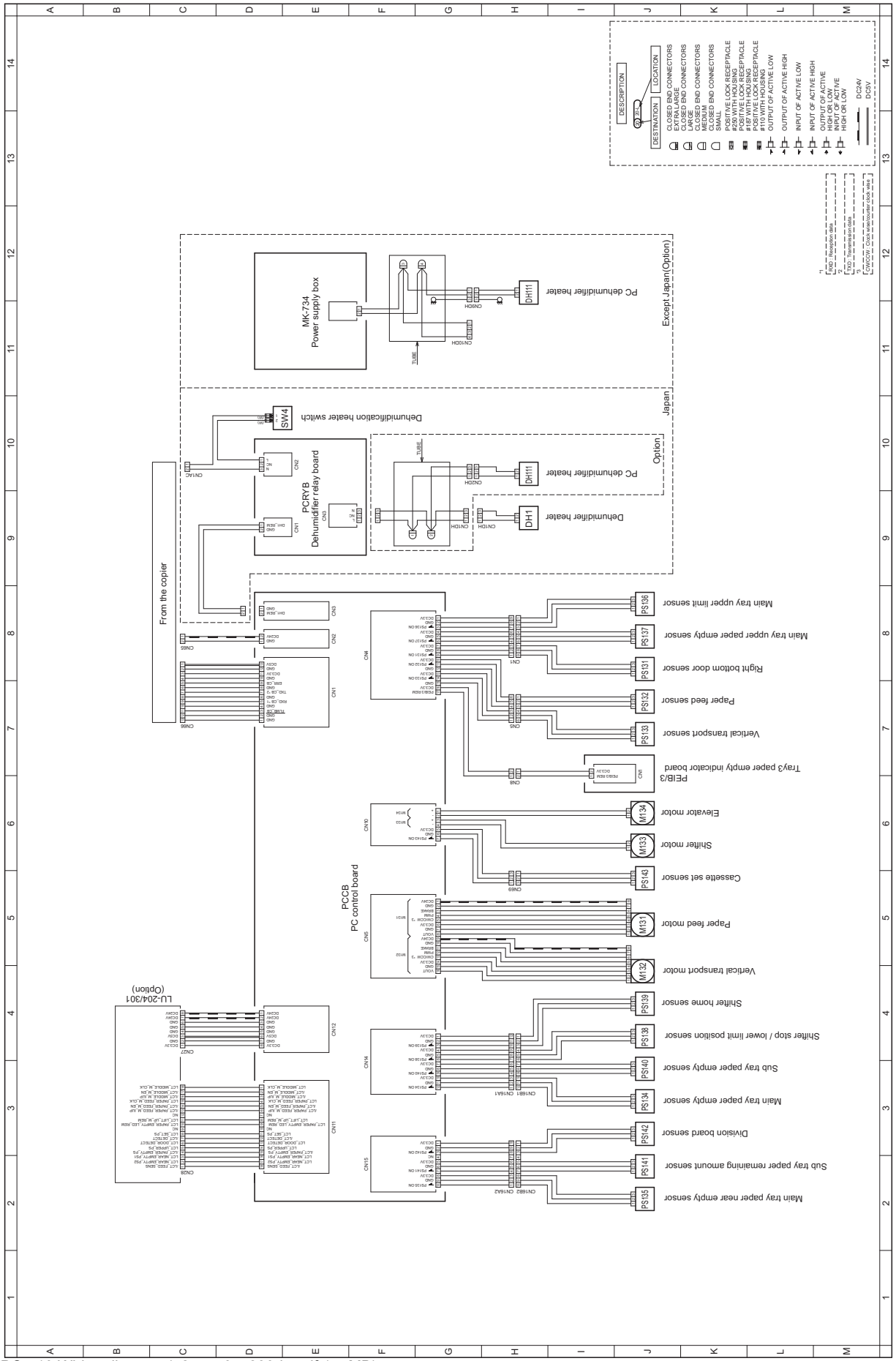

- PC-410 Wiring diagram (a2xmm0nc830da.pdf 1.4 MB)

2.6 FS-533

2.6.1 FS-533

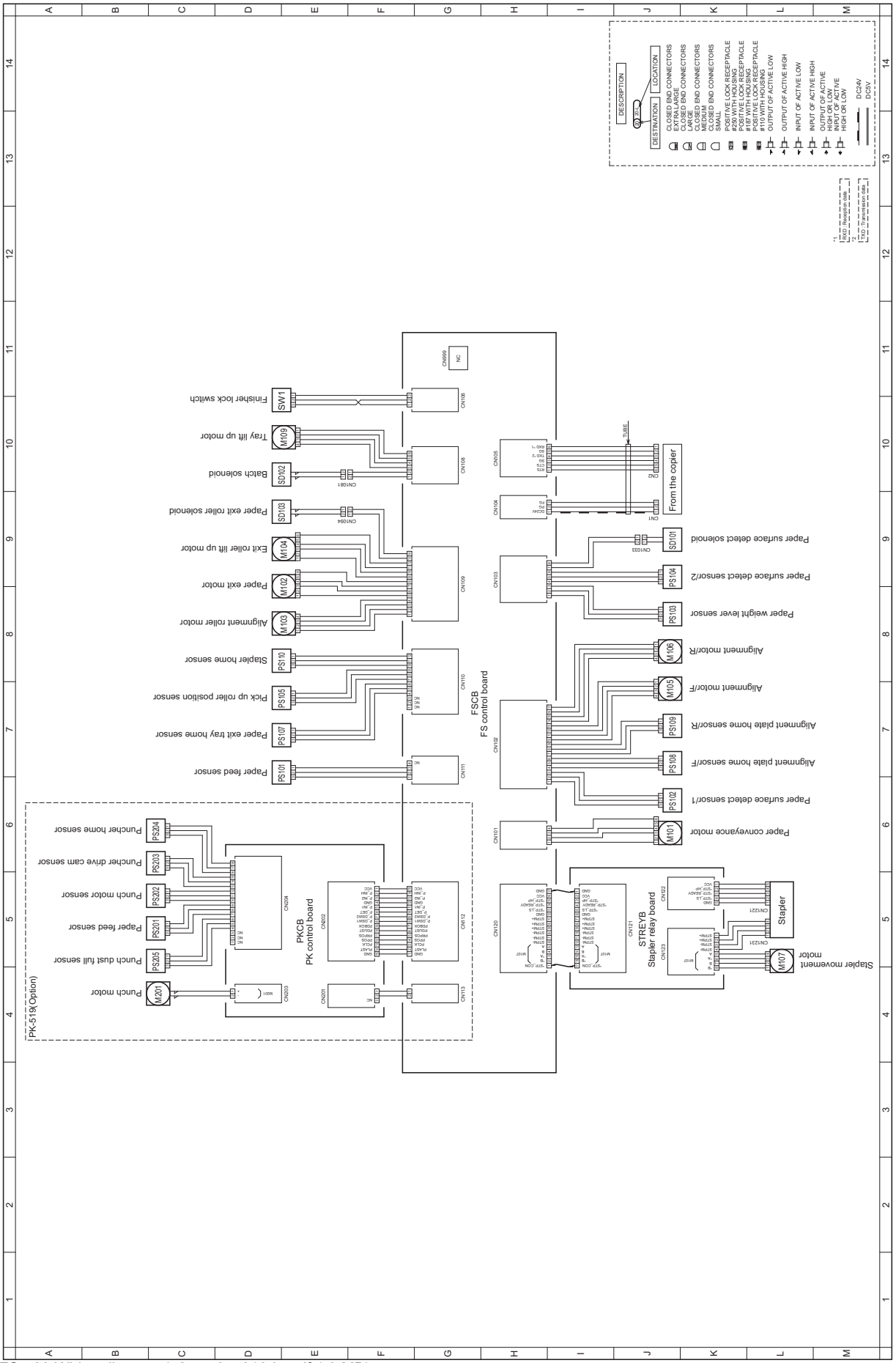

FS-533 Overall wiring diagram

- FS-533 Wiring diagram (a2yum0nc810da.pdf 1.3 MB)

2.7 FS-534

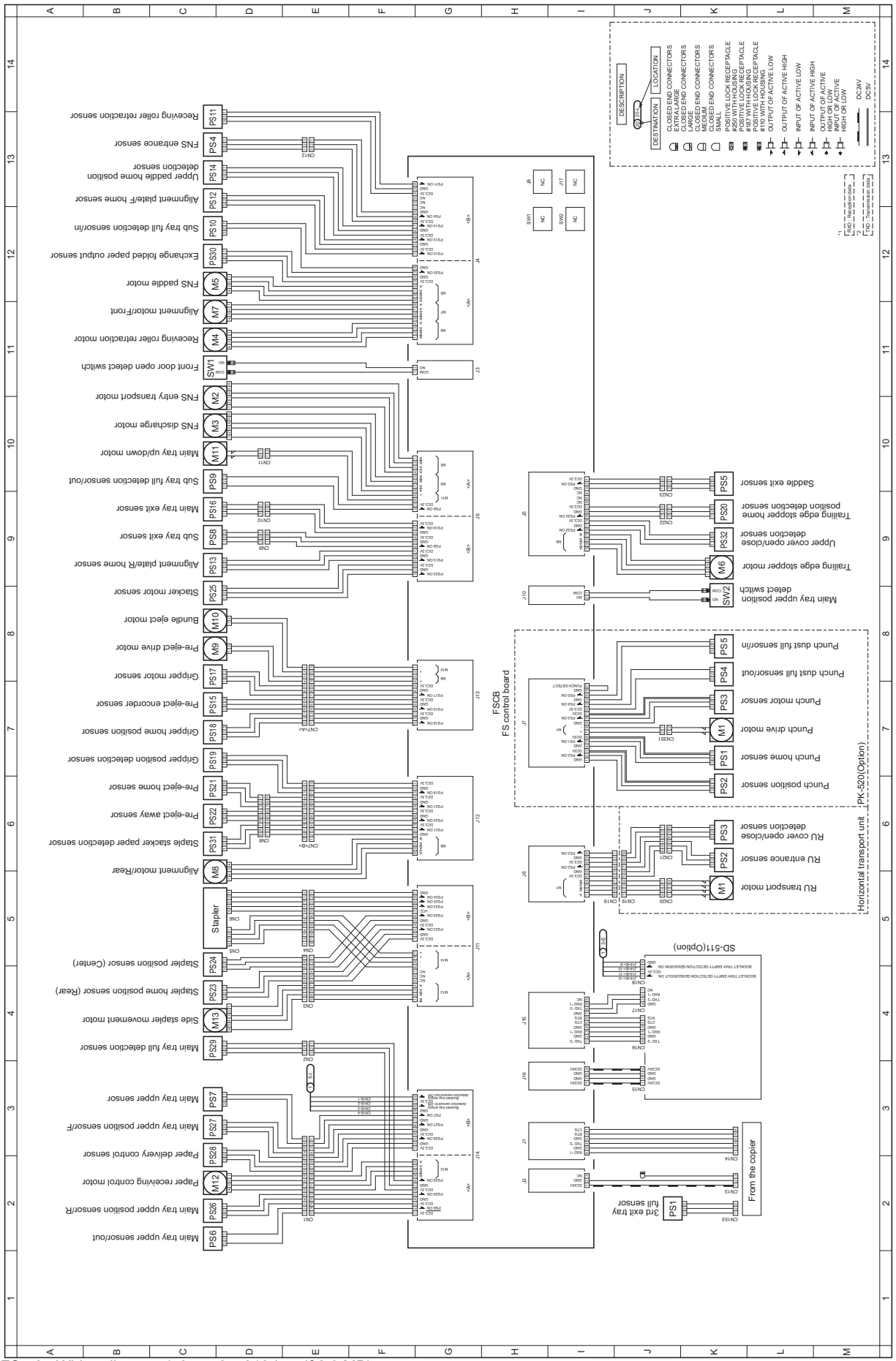

- FS-534 Wiring diagram (a3epm0nc810da.pdf 2.0 MB)

2.8 SD-511

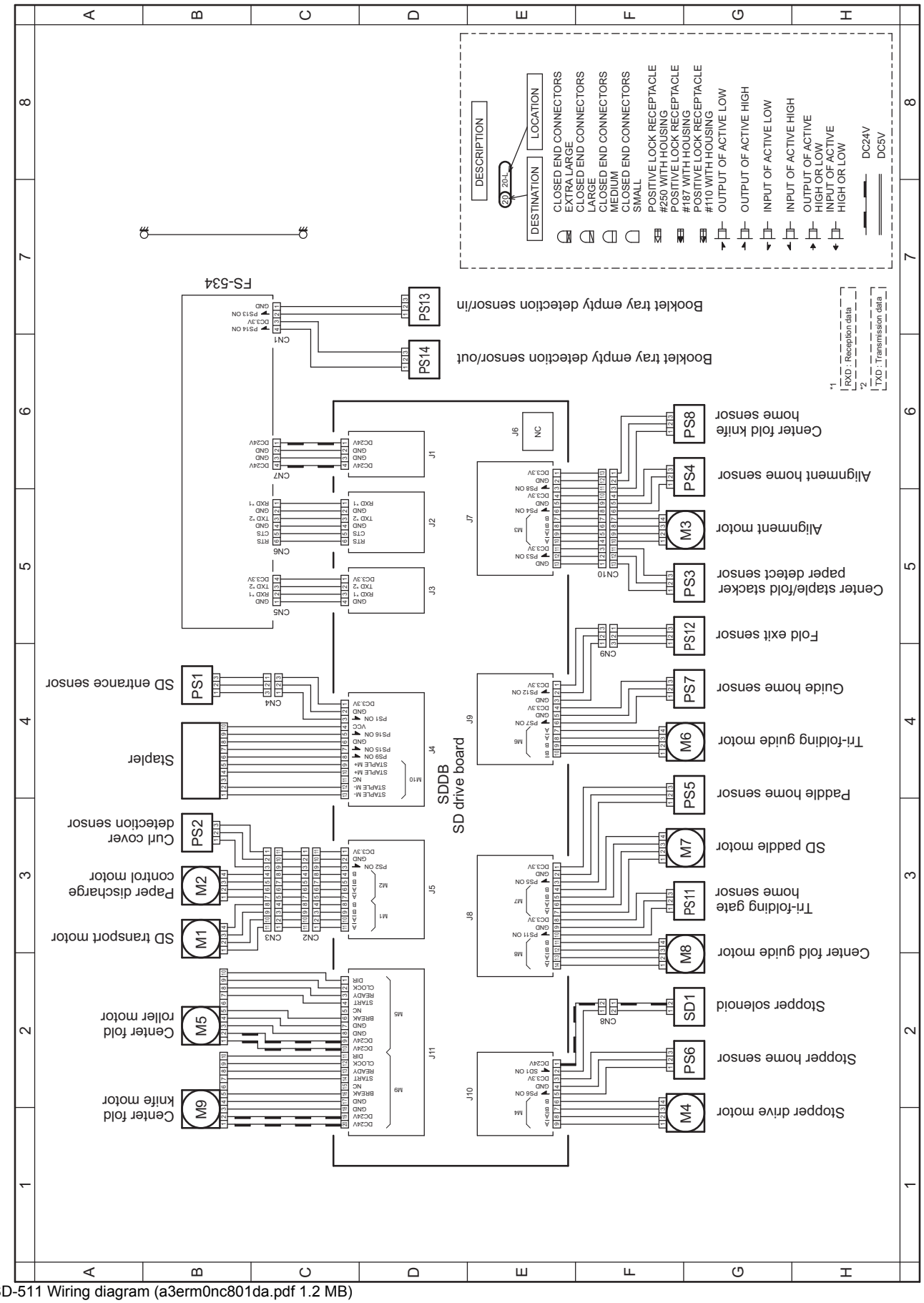

A3ER-B001-0A
Dec.2011

- SD-511 Wiring diagram (a3erm0nc801da.pdf 1.2 MB)

2.9 JS-506

2.9.1 JS-506

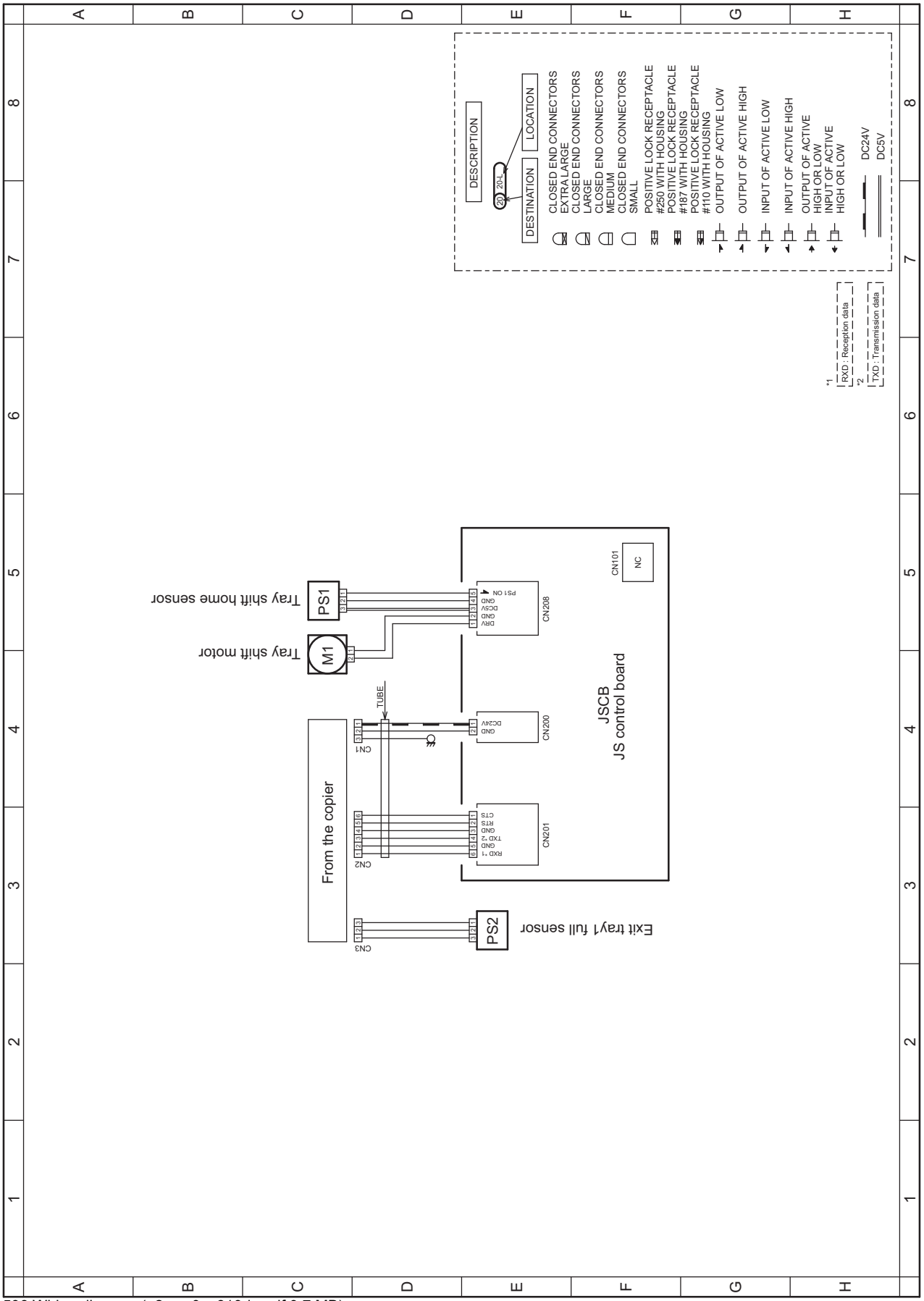

- JS-506 Wiring diagram (a2yvm0nc810da.pdf 0.7 MB)

O THEORY OF OPERATION bizhub 364e/284e/224e

1. INTERFACE SECTION

1.1 Configuration

1.1.1 Front side

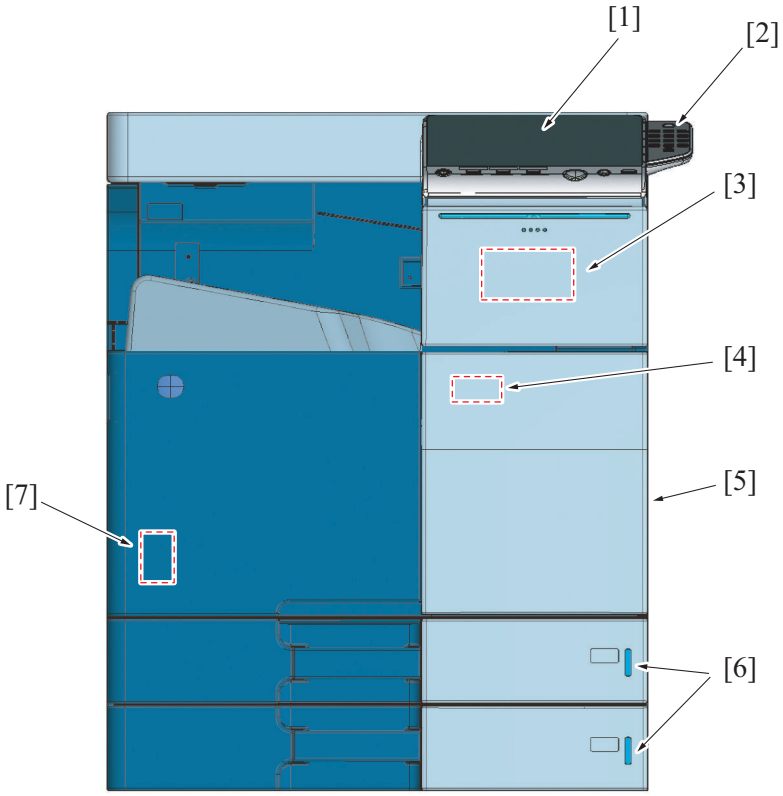

[1]	Control panel	[2]	Keypad KP-101 (Tenkey: option)
[3]	IC card reading position *	[4]	Total counter
[5]	Front door	[6]	Remaining paper level display (Blinking: near empty, Lit up: empty)
[7]	Main power switch (SW1)	-	-

- *: When a MFP main body is equipped with an optional authentication unit AU-201 and MK-735.

(1) Front door inside

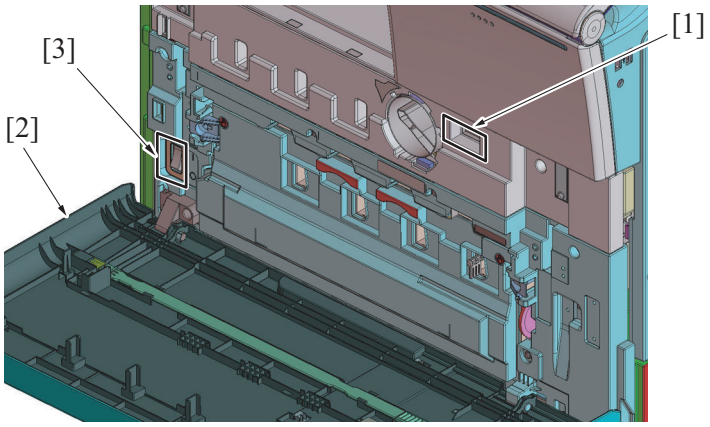

[1]	Total counter	[2]	Front door (open position)
[3]	Main power switch (SW1)	-	-

(2) Control panel section

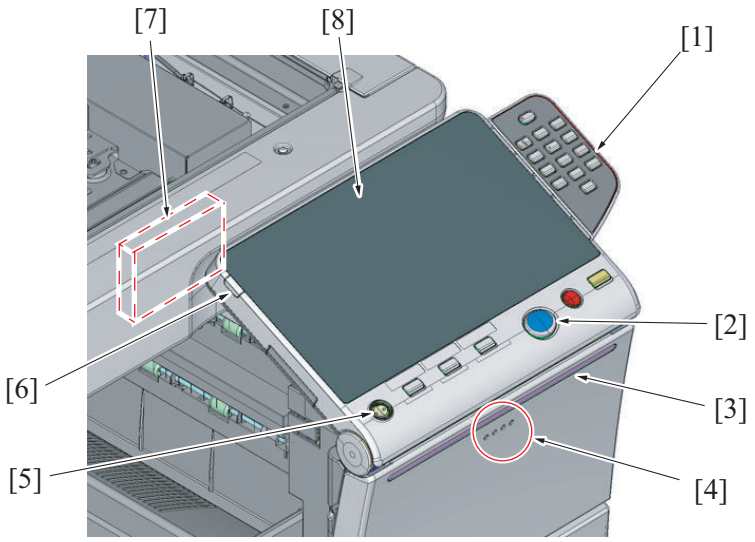

[1]	Keypad KP-101 (Tenkey: option)	[2]	Start key *1
[3]	Operation status indicator section *1	[4]	Data indicator *1
[5]	Power key *1	[6]	Warning Status indicator section *1
[7]	Upgrade kit UK-208 (Wireless LAN: Option)	[8]	Touch panel

NOTE

- ***1: For details of the control state of lighting and blinking, refer to O.23.2.3 Operation status indicator section.**

1.1.2 Right side

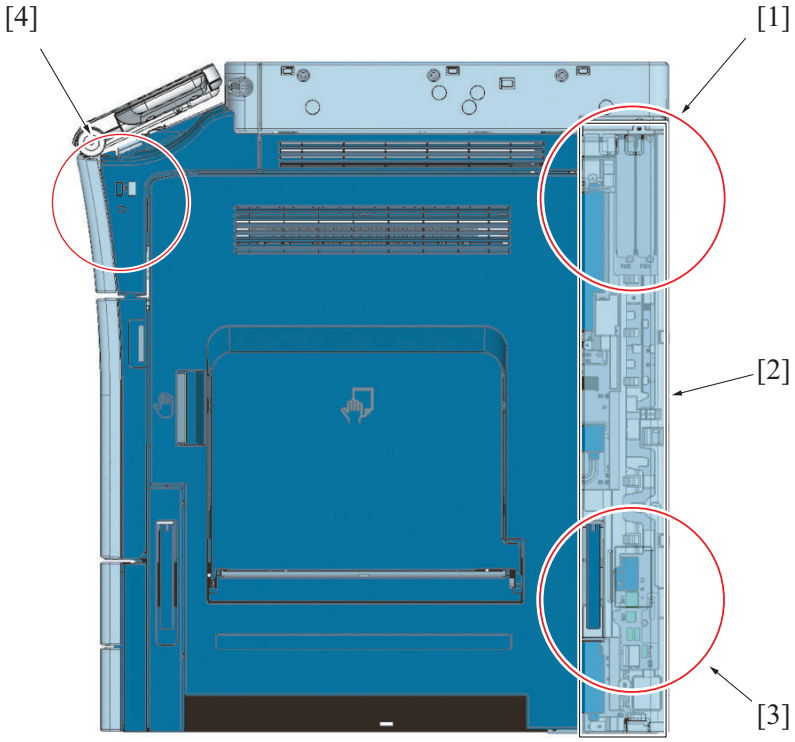

[1]	Rear upper side	[2]	Rear right cover
[3]	Rear lower side	[4]	Front side

(1) Front side

NOTE

- **Use utmost care when unplugging or plugging the cable. If the USB cable extended from the USB port at the rear portion is unplugged, the USB port at the front side is no longer operational.**

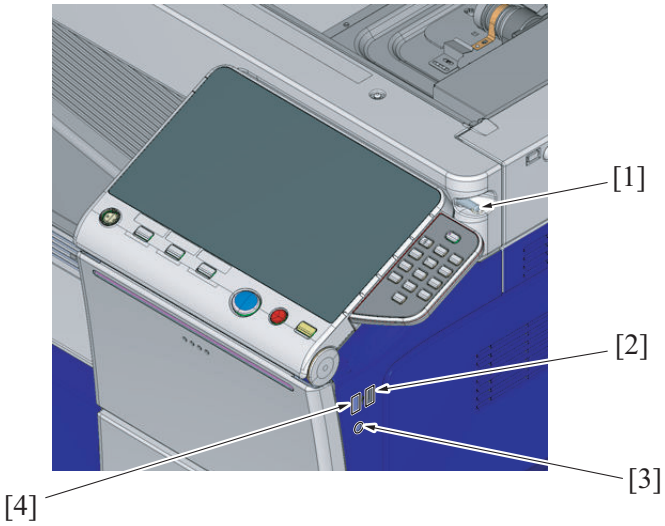

[1]	Stylus pen	[2]	USB port (Type-A, standard)
[3]	Voice guidance output terminal *	[4]	USB port (Type-A, optional) *

- *: When the local interface kit EK-606/EK-607 is mounted.

(2) Rear upper side

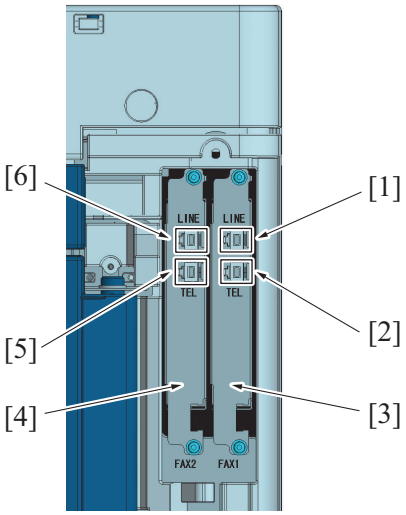

[1]	LINE terminal 1 (for telephone main line) *1	[2]	TEL terminal 1 (for external telephone main line) *1
[3]	FAX kit FK-511 (for main line) *1	[4]	FAX kit FK-511 (for line 2) *2
[5]	Not used	[6]	LINE terminal 2 (for telephone line 2) *2

- *1: When only one optional FK-511 unit is mounted
- *2: When two optional FK-511 units are mounted

NOTE

- **If only one optional FK-511 is to be mounted, be sure to use the right-hand side for the main line use.**

(3) Rear lower side

NOTE

- **The USB cable is extended up to the USB port at the front side. If the cable is unplugged from the USB port, therefore, the USB port at the front side is no longer operational. Use utmost care when unplugging or plugging the cable.**
- **Sliding the service port cover will reveal the service port dedicated to firmware upgrading.**
- **The service port cover is provided with a service port sensor that detects that the cover is opened or closed.**
- **When the service port sensor is blocked, the machine determines that the cover is closed.**

NOTE

- **For details of "firmware upgrading", see "J REWRITING OF FIRMWARE".**
- **Be sure to close the service port cover after the firmware upgrading is completed.**

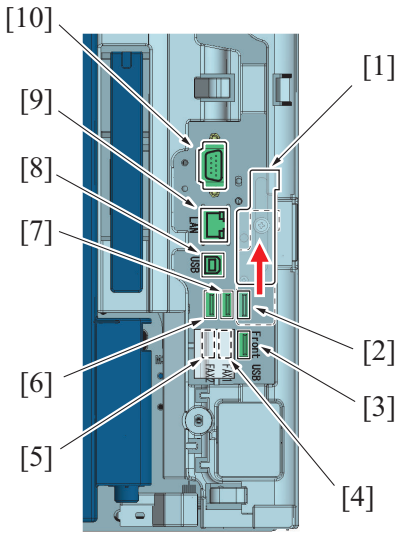

[1]	Service port cover (firmware upgrading position)	[2]	Service port (USB Type-A, dedicated to firmware upgrading)
[3]	USB extension port (USB extension cable to the USB board at the front side)	[4]	FAX kit FK-511 connection port (for main line) *1
[5]	FAX kit FK-511 connection port (for line 2) *2	[6]	USB port (Type-A)
[7]	USB port (Type-A)	[8]	USB port (Type-B, dedicated to local print)
[9]	Network port	[10]	Serial port (for CS Remote Care modem connection)

- *1: When only one optional FK-511 unit is mounted
- *2: When two optional FK-511 units are mounted

(a) Service port cover sensor section

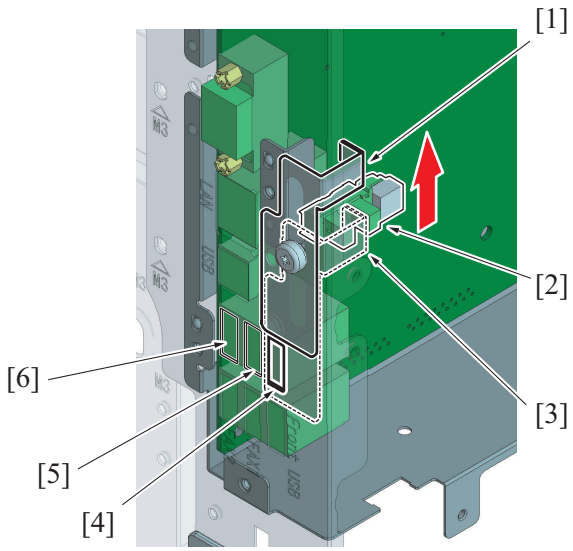

[1]	Service port cover (firmware upgrading position)	[2]	Service port sensor (PS50)
[3]	Service port cover (standard position)	[4]	Service port (USB Type-A, dedicated to firmware upgrading)
[5]	USB port (Type-A)	[6]	USB port (Type-A)

1.1.3 Rear side

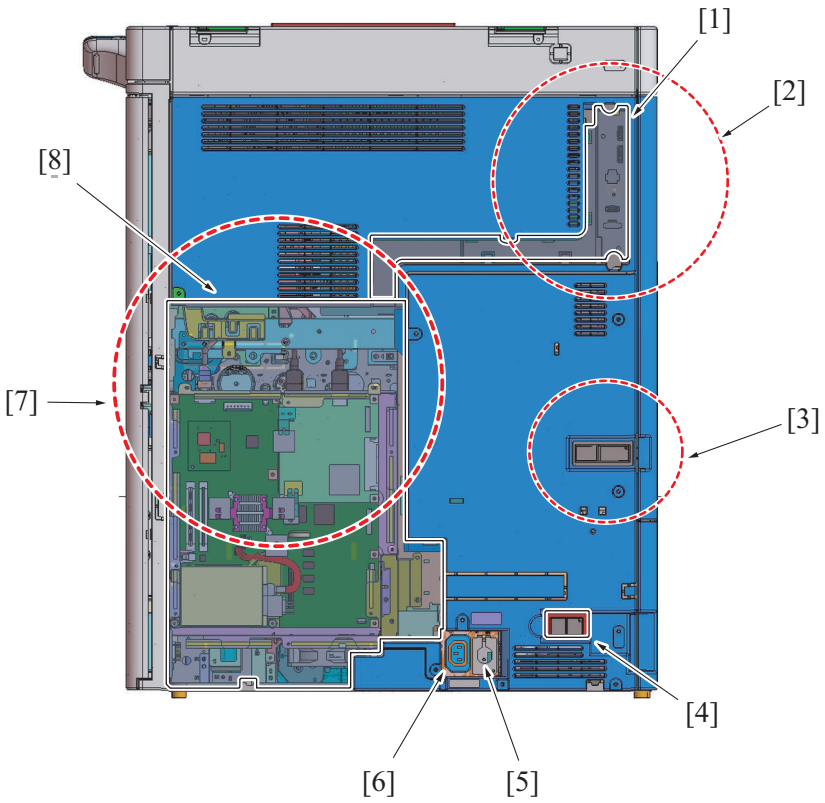

[1]	DF cable cover	[2]	Rear left side
[3]	Toner filter	[4]	Ozone filter
[5]	Power cable	[6]	Power inlet (for MK-719/MK-734; Japan, Taiwan and Europe only)
[7]	Rear right side	[8]	Lower rear cover/1

(1) Rear left side

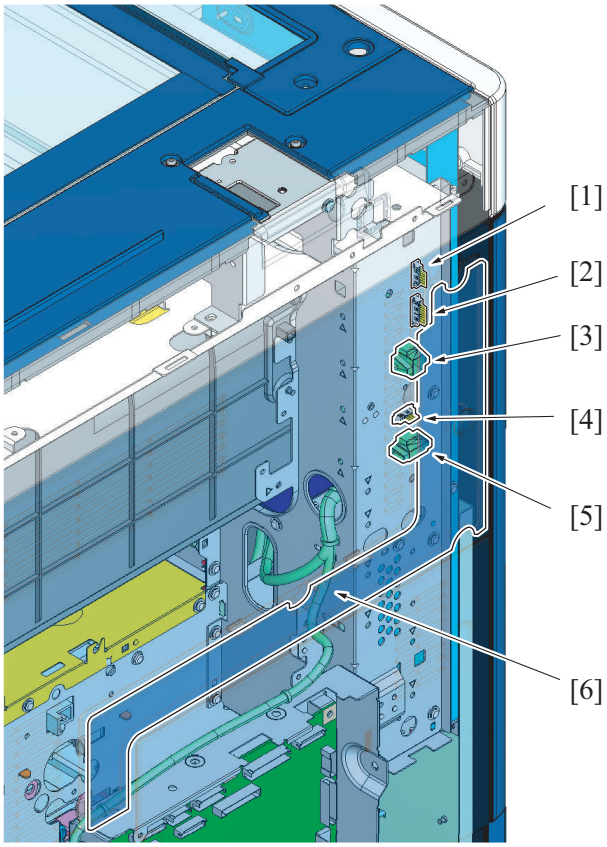

[1]	Document feeder connection connector (for DF-701) *	[2]	Document feeder connection connector (for DF-624/ DF-701)

[3]	Document feeder connection connector (for DF-624/ DF-701)	[4]	Finisher connection connector
[5]	Finisher connection connector	[6]	DF cable cover

- *: If the optional dual scan document feeder DF-701 is to be mounted, the connector for the 2nd side image signal should be connected, in addition to the control system signal connectors [1], [2], and [3].

(2) Rear right side

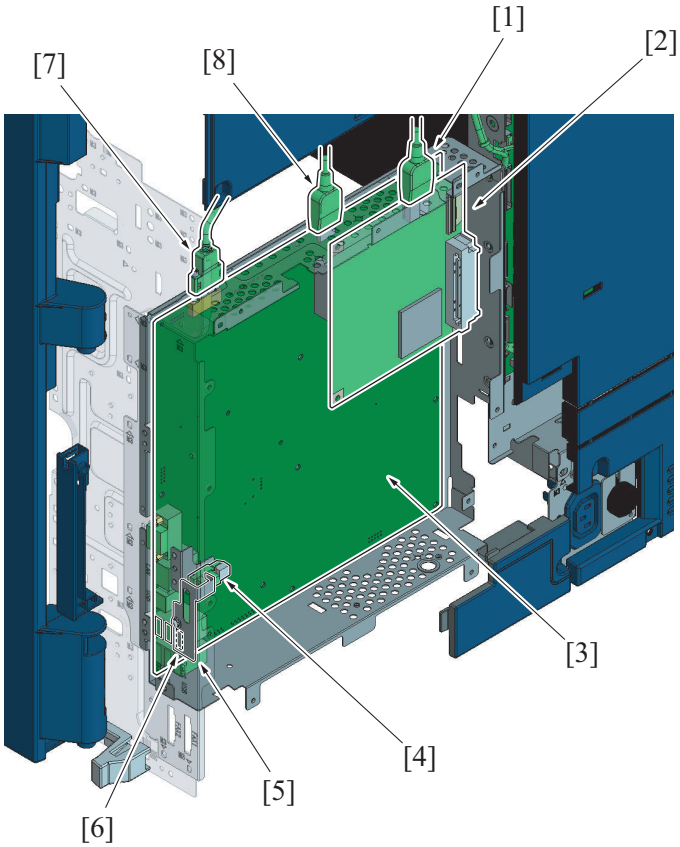

[1]	Document feeder connection connector (2nd side image signal: for DF-701) *1	[2]	Dual scan image processing board (DSIPB) *2
[3]	MFP board (MFPB)	[4]	Service port sensor (PS50)
[5]	Service port cover (standard position)	[6]	Service port (USB Type-A, dedicated to firmware upgrading)
[7]	Control panel connection connector	[8]	Scanner connection connector (image signal)

- *1: If the optional dual scan document feeder DF-701 is to be mounted, the control system signal connectors (three) should be connected, in addition to the connector for the 2nd side image signal [1].
- *2: When the DF-701 (dual scan document feeder) is installed, because the dual scan image processing board has been already installed, no installation of the UK-209 (upgrade kit) is required.

2. SCANNER SECTION

2.1 Configuration

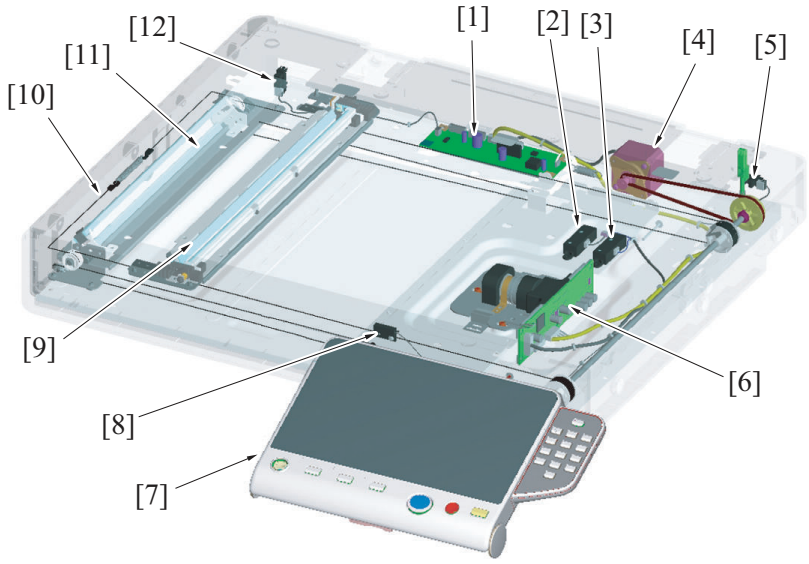

[1]	Scanner drive board (SCDB)	[2]	Original size sensor/1 (PS204)
[3]	Original size sensor/2 (PS205) *	[4]	Scanner motor (M201)
[5]	Angle sensor (PS202)	[6]	CCD board (CCDB)
[7]	Control panel (capacitive touch panel)	[8]	Original cover sensor (RS201)
[9]	LED exposure unit (LU201)	[10]	Scanner cable
[11]	Mirror unit	[12]	Scanner home sensor (PS201)

- *: Option

2.2 Drive

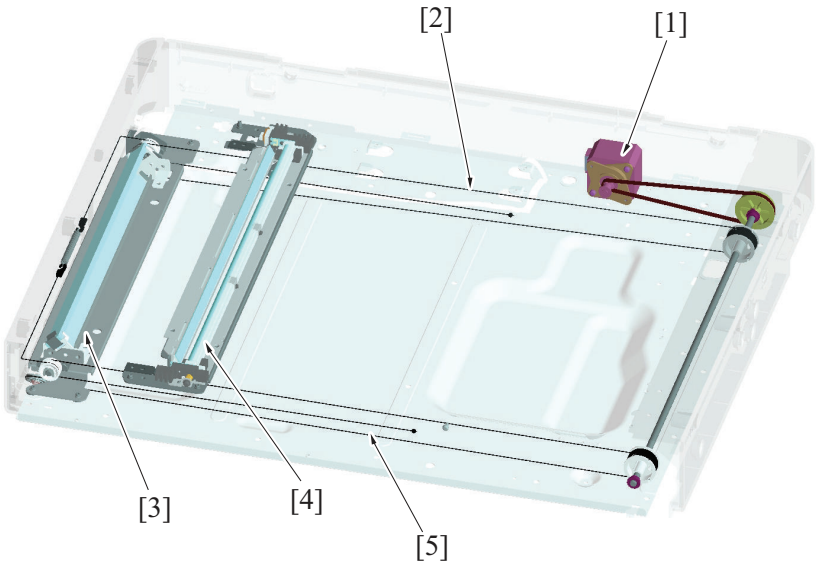

[1]	Scanner motor (M201)	[2]	Scanner drive cable/R
[3]	Mirror unit	[4]	LED exposure unit (LU201)
[5]	Scanner drive cable/F	-	-

2.3 Operation

2.3.1 LED exposure unit

- LEDs (Light Emitting Diodes) are used for the light source of the scanner section for power saving.
- There is one LED on the LED board of LED exposure unit both ends, so that two LEDs illuminate.
- Light emitted from the LED travels along the light guide.
- The original is irradiated with direct light that has traveled along the light guide and indirect light reflected from the reflector, which ensures that the original is exposed to steady, uniform light.

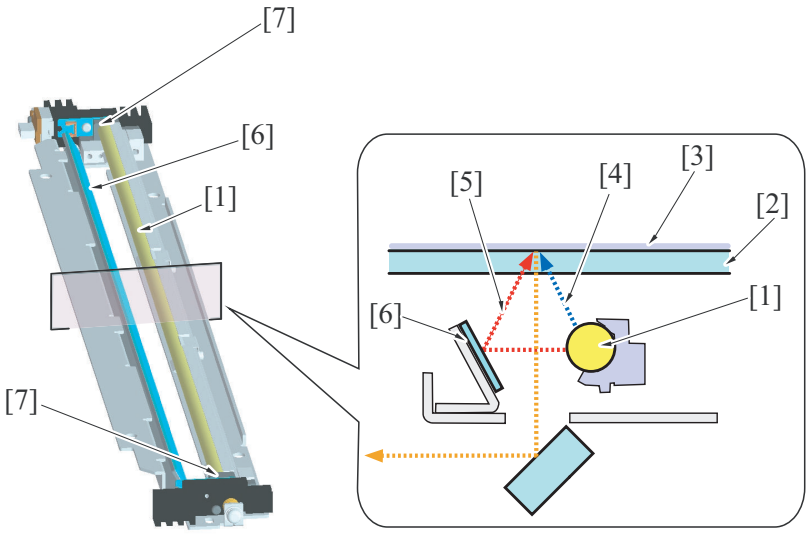

[1]	Light guide	[2]	Original glass
[3]	Original	[4]	Direct light
[5]	Indirect light	[6]	Reflector
[7]	LED board	-	-

2.3.2 When the power is ON

1. When the power is turned ON, the LED lights up.
2. The LED exposure unit moves to the home position.
3. The LED exposure unit moves from the home position to the shading position (under the shading correction sheet).
4. The gain value of the CCD sensor output voltage to R, G, and B is adjusted.
5. After adjusting the gain value, a shading correction is performed.
6. The LED exposure unit moves in the return direction and stops at the home position.
7. When the DF is raised for placement of the original, the LED exposure unit moves to the original size detection position.

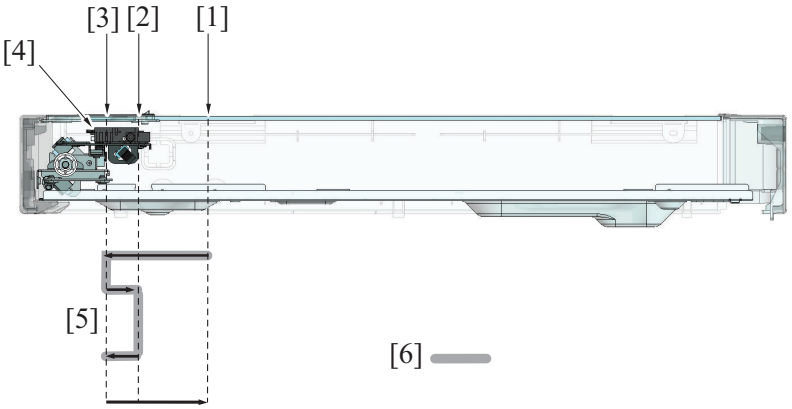

[1]	Original size detection position	[2]	Shading position
[3]	Home position	[4]	LED exposure unit (LA201)
[5]	Shading correction	[6]	The LED turns ON

2.3.3 Control when the Start key is pressed

(1) Original scanning mode

- Original scanning mode has two types: Original cover mode and DF mode.

(a) Original cover mode

1. Turning the Start key ON will turn the LED ON.
2. The LED exposure unit moves in the return direction and stops at the shading position. At the shading position, the gain adjustment is made.
3. The LED exposure unit moves in the return direction and stops at the scan start position.
4. To start a scan, the LED exposure unit moves from the scan start position to the leading edge of an original while performing shading correction.
   The exposure unit will start reading the original image from the leading edge.
   The unit will finish reading the image at the trailing edge of the original.
5. The LED will turn OFF when the reading is complete.
6. The LED exposure unit moves from the position of the trailing edge of the image to the home position.

It returns to the home position after moving from the shading position to the home position.
It moves from the home position to the original size detection position.

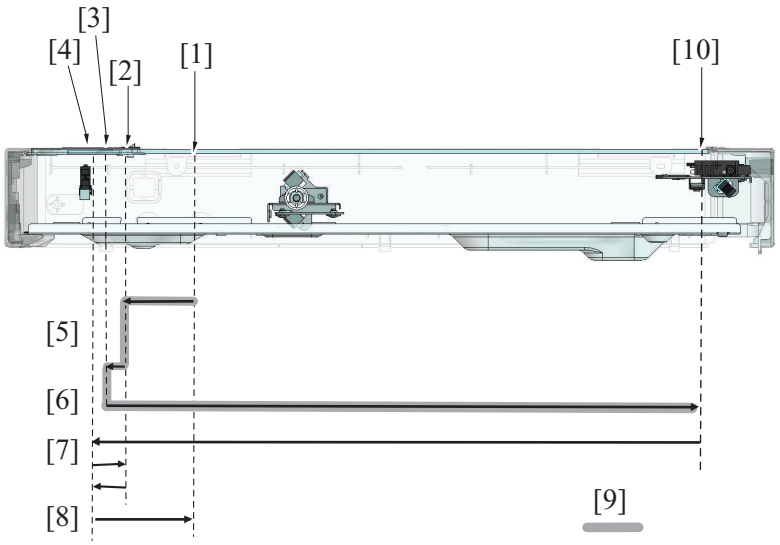

[1]	Original size detection position	[2]	Shading position
[3]	Scan start position	[4]	Home position
[5]	Gain adjustment	[6]	Read original
[7]	Returns to the home position	[8]	Moves to the original size detection position
[9]	The LED turns ON	[10]	Trailing edge of the image

(b) DF mode (DF-624: 1st side/2nd side, DF-701: 1 side)

- The original fed by the document feeder will be read at the DF original glass for. The LED exposure unit will move to the reading position and stops. The original will be read as the paper is transferred.

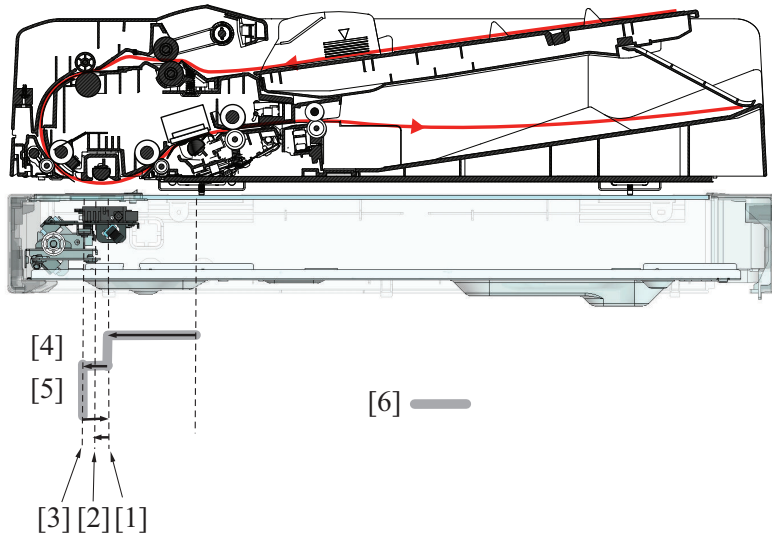

[1]	Shading position	[2]	Home position
[3]	Original reading position	[4]	Shading correction
[5]	Read original	[6]	The LED turns ON

(2) Original scanning control

- The light reflected off the exposed original reaches the CCD sensor via the lens.
- The CCD sensor outputs an electric signal (analog) that varies according to the intensity of the light.
- One CCD sensor has a photoreceiver that individually responds to each of the three primary colors of R, G, and B.
- The electric signal is converted to digital data for each of R, G, and B by the CCD board (CCDB), becoming individual digital signals.
- Analog-to-digital conversion is made according to an instruction given by the MFP board (MFPB).

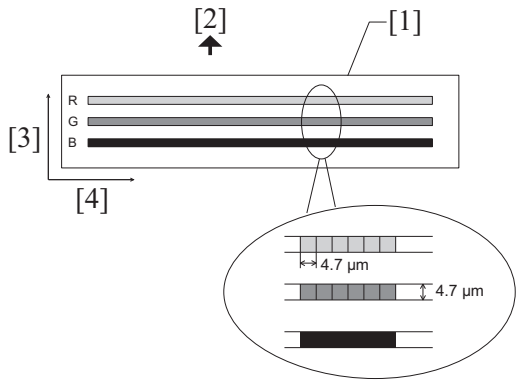

[1]	CCD sensor	[2]	Scanning direction
[3]	Sub scanning direction	[4]	Main scanning direction

(a) Calibration

The following adjustment and correction (calibration) are made before the original is scanned, so that the image of the original can be adequately read. For details, see "O.18.1 Scanner section image processing block diagram".

- Gain adjustment
- Shading correction

2.3.4 Original scanning area

- Original scanning areas vary depending on a scanning mode.

(1) Original cover mode

- Main scanning direction: Max. 297.0 mm
- Sub scanning direction: Max. 431.8 mm

(2) DF mode

(a) Scanning at 400 dpi or less

- Main scanning direction: Max. 297.0 mm
- Sub scanning direction: Max. 1,000.0 mm

(b) Scanning at 600 dpi

- Main scanning direction: Max. 297.0 mm
- Sub scanning direction: Max. 432.0 mm

2.3.5 Original size detection control

(1) Detection method

- For the sub-scanning (length) direction, the fixed reflective original size sensor (one beam) is used.
- For the main scanning (width) direction, the CCD is used.
- A standard original size is determined by the state of the original size sensor, either the activated or deactivated state, and the width detected by the CCD.
- For a nonstandard size, the control sets a smallest possible standard size that is larger than the nonstandard size in question to thereby prevent void image.

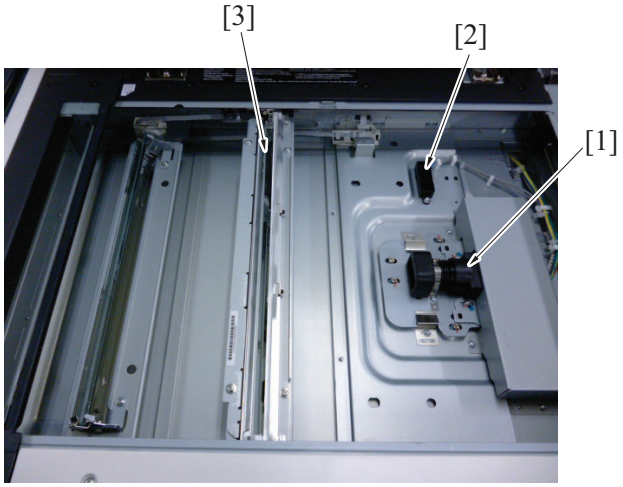

[1]	CCD board (CCDB)	[2]	Original size sensor/1 (PS204)
[3]	LED exposure unit (LU201)	-	-

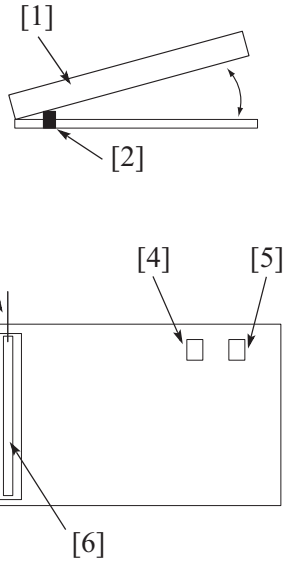

[1]	Reverse automatic document feeder	[2]	Angle sensor (PS202)
[3]	Original reading position	[4]	Original size sensor/1 (PS204)
[5]	Original size sensor/2 (PS205) *	[6]	LED exposure unit (LA201)
[7]	Original standard position	-	-

- *: Option

(2) Original size judgment

NOTE

- **Table 1 or 2 can be selected in the service mode.**

(a) Criterion

Metric area & china area

Table 1

Original size sensor/ 1	Main scanning width (mm)								
	0 to 130.0	Up to 153.0	Up to 187.0	Up to 200.0	Up to 215.0	Up to 225.0	Up to 261.5	Up to 275.0	275.1 or over
OFF	No original	A5S	B5S	16KS	A4S	B5	B5	16K	A4
ON	A3	-	-	-	-	FLS	B4	8K	A3

Table 2

Original size sensor		Main scanning width (mm)											
1	2*	0 to 130	Up to 143.9	Up to 153	Up to 187	Up to 200	Up to 213	Up to 220.9	Up to 225	Up to 261.5	Up to 274.7	Up to 284.4	284.5 or over
OFF	OFF	No original	$5^1/_2$ x $8^1/_2$ S	A5S	B5S	16KS	A4S	$8^1/_2$ x 11 S	-	B5	16K	$8^1/_2$ x 11	A4
ON	OFF	A3	-	-	-	-	FLS	FLS	FLS	-	-	-	-
-	ON	A3	-	-	-	-	-	$8^1/_2$ x 14	-	B4	8K	11 x 17	A3

- *: Option

Inch area

Table 1

Original size sensor/1	Main scanning width (mm)			
	0 to 130.0	Up to 144.7	Up to 220.9	Up to 221.0
OFF	No original	$5^1/_2$ x $8^1/_2$ S	$8^1/_2$ x 11 S	$8^1/_2$ x 11
ON	11 x 17	-	$8^1/_2$ x 14	11 x 17

Table 2

Original size sensor		Main scanning width (mm)									
1	2*	0 to 130	Up to 143.9	Up to 153	Up to 187	Up to 213	Up to 220.9	Up to 225	Up to 262	Up to 284.4	284.5 or over
OFF	OFF	No original	$5^1/_2$ x $8^1/_2$ S	A5S	B5S	A4S	$8^1/_2$ x 11 S	-	B5	$8^1/_2$ x 11	A4
ON	OFF	A3	-	-	-	FLS	FLS	FLS	-	-	-

Original size sensor		Main scanning width (mm)									
1	2*	0 to 130	Up to 143.9	Up to 153	Up to 187	Up to 213	Up to 220.9	Up to 225	Up to 262	Up to 284.4	284.5 or over
-	ON	A3	-	-	-	-	$8^1/_2$ x 14	-	B4	11 x 17	A3

- *: Option

(3) Detection timing

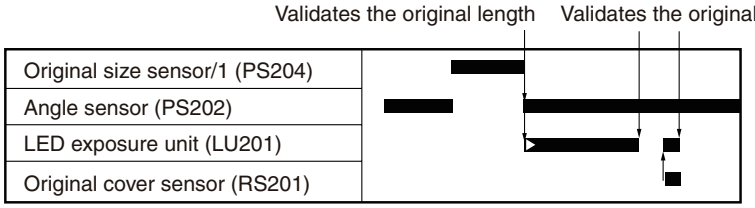

- For the sub-scanning (length) direction, the LED is turned ON when the angle sensor is activated from the deactivated state and timing is established according to the state of the original size sensor.
- Detection is made twice for the main scanning (width) direction, one when the angle sensor is activated and the other when the original cover sensor is activated.
- The original size is reset when the original cover sensor is deactivated from activated state as a result of the DF being raised.

2.3.6 Image processing

The image processing has following items. For details, see “O.18.1 Scanner section image processing block diagram”.
Scanner section image processing block diagram

- Photoelectric conversion
- Analog-to-digital conversion

3. WRITE SECTION (PH SECTION)

3.1 Configuration

PH unit



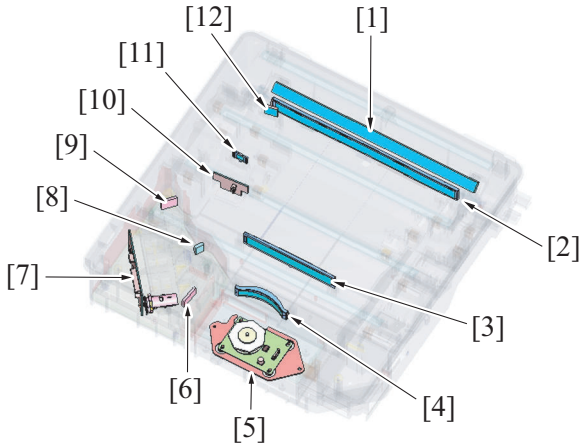

[1]	Return mirror1	[2]	G3 lens
[3]	G2 lens	[4]	G1 lens
[5]	Polygon motor (M14)	[6]	Synthetic mirror
[7]	Laser drive board (LDDB)	[8]	Cylindrical lens
[9]	Return mirror (light source)	[10]	Index board (INDEXB)
[11]	Index lens	[12]	Index mirror

3.2 Operation

3.2.1 Outline

- The surface of the photo conductor is irradiated with a laser light and an electrostatic latent image is thereby formed.
- A semiconductor laser is provided. A single polygon motor is used to make a scan.)
- The polygon mirror has seven faces.
- A rotating polygon mirror is irradiated with a laser light emitted from the laser diode on the laser drive board to let the laser light scan.
- To achieve a resolution of 1200 dpi, the PH unit incorporates the two-beam array LD.
- The two-beam array laser diode consists of two elements arranged vertically. Two lines are scanned with two laser beams emitted from these two elements through a single face of the polygon mirror.

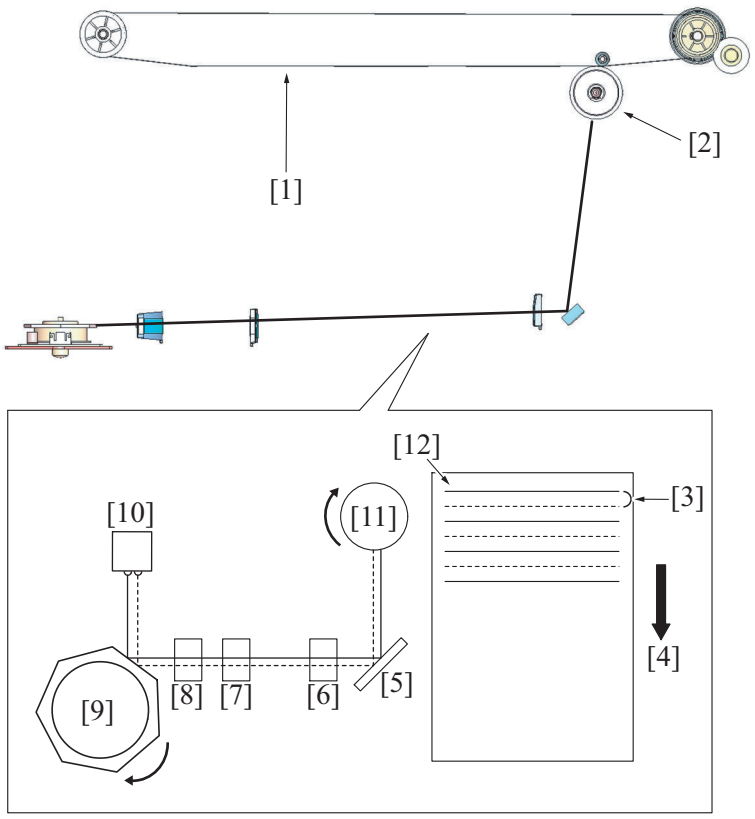

[1]	Transfer belt	[2]	Photo conductor
[3]	Two line, One scan	[4]	Photo conductor rotation direction
[5]	Return mirror1	[6]	G3 lens
[7]	G2 lens	[8]	G1 lens
[9]	Polygon mirror	[10]	Laser diode
[11]	Photo conductor	[12]	Beam

3.2.2 Laser exposure process

(1) Operation

1. The laser light enters the cylindrical lens via the synthetic mirror and return mirror (light source).
2. At the cylindrical lens, each laser light is condensed in the vicinity of the polygon mirror.
3. The condensing angle of laser light is corrected by the G1 and G2 lenses and then reaches each return mirror.
4. The laser light is condensed on the photo conductor surface via the G3 lens and return mirror/1.

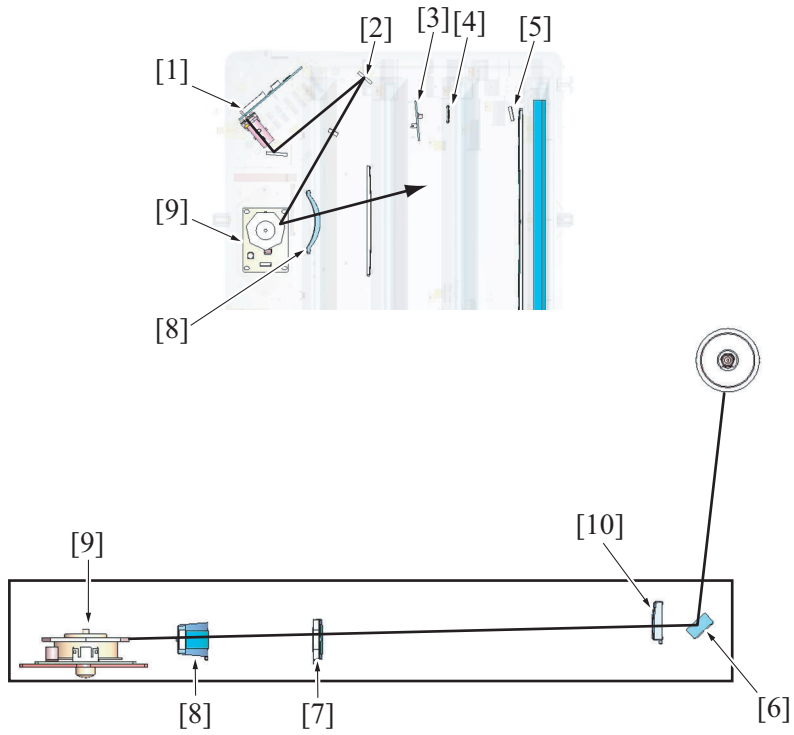

[1]	Laser diode (LD)	[2]	Return mirror (light source)
[3]	Index board (INDEXB)	[4]	Index lens
[5]	Index mirror	[6]	Return mirror1
[7]	G2 lens	[8]	G1 lens
[9]	Polygon motor (M14)	[10]	G3 lens

3.2.3 Laser emission timing

- After a print cycle has been started, when the stable rotation signals of photo conductor and polygon motor are detected, a laser ON signal is output from the printer control board.
- The laser ON signal causes laser diode to turn ON and emit a laser beam.
- After passing through the return mirror (light source), cylindrical lens, polygon mirror, G1 lens, G2 lens, index mirror, and index lens, the laser light is applied to the index board. This generates an index signal.
- This index signal has a function of keeping the same laser light emission timing per every one line in the main scanning direction.
- If the index signal is not detected within a predetermined period of time, the machine determines that it is a laser emission fault, displaying “trouble code: C4501 laser malfunction”.
- The machine continuously monitors the index signal. If the index signal cannot be detected at regular intervals, the machine determines that it is a laser emission fault, displaying “trouble code: C4501 laser malfunction”.

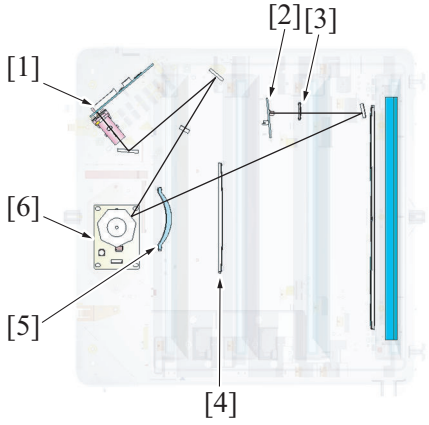

[1]	Laser diode (LD)	[2]	Index board (INDEXB)
[3]	Index lens	[4]	G2 lens
[5]	G1 lens	[6]	Polygon motor (M14)

3.2.4 Laser emission stop

Emission of the laser beam is stopped if any of the following conditions is encountered during printing:

- End of a print job
- The front door or any other door is opened.
- A misfeed occurs.
- A malfunction occurs.

3.2.5 Laser emission area

(1) Main scanning direction

- The print start position in the main scanning direction is determined by the main scanning print start signal (/HSYNC) that is output from the printer control board and the width of the paper.
- The laser emission area is determined by the paper size. The area of 3 mm/0.118 inch on both edges of the paper is, however, the void image area.

(2) Sub scanning direction

- The print start position in the sub scanning direction is determined by the image write start signal (/TOD) that is output from the printer control board and the length of the paper.
- The laser emission area is determined by the paper size. However, there are void areas that are 4.2 mm/0.165 inch from the leading edge and 3 mm/0.118 inch from the trailing edge of paper. (With the thin paper, the area of 4.2 mm/0.165 inch from the leading edge of paper is the void image area.)

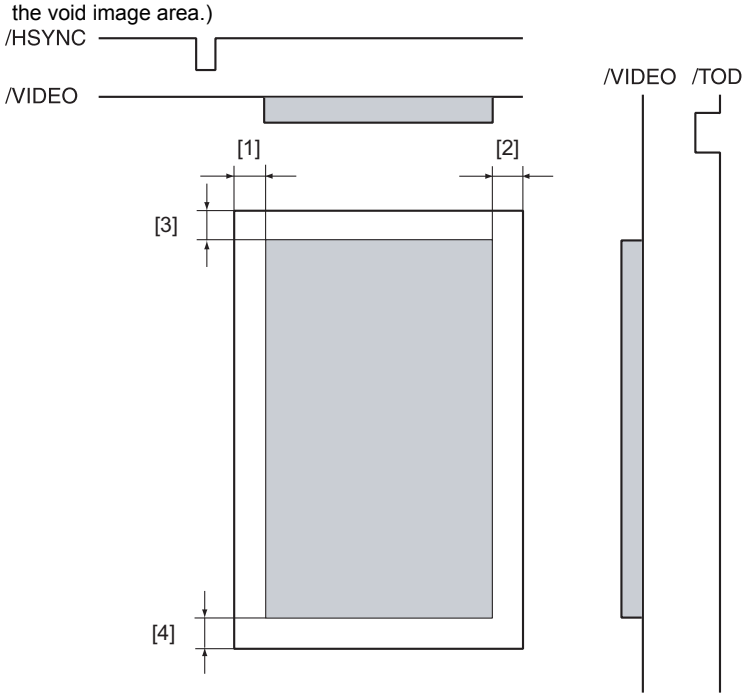

[1]	Void width: 3 mm/0.118” *	[2]	Void width: 3 mm/0.118” *
[3]	Void width: 4.2 mm/0.165”	[4]	Void width: 3 mm/0.118” *

- *: Void width is 4.2 mm/0.165" during PC print.

3.2.6 PH window cleaning

- The PH window, if contaminated, blocks the path of the laser beam and the surface of the photo conductor can no longer be exposed properly. This could result in image problems, including white bands or white lines on the print image.
- The PH window is provided with a cleaning guide that prevents any image problem caused by a dirty PH window from occurring.

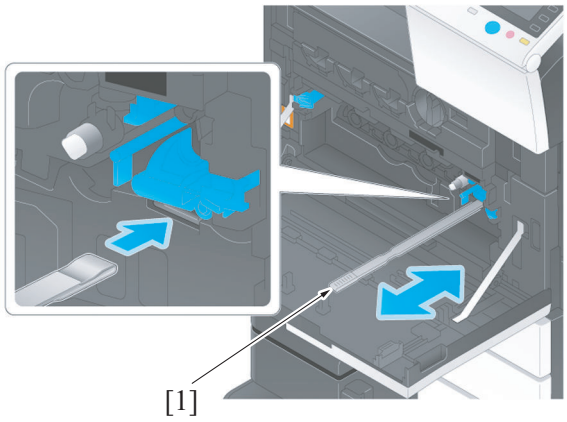

[1]	PH window cleaning tool	-	-

(1) PH window cleaning procedures

- Slowly pull to the front the PH window cleaning tool and push it back into the original position. This allows the cleaning material mounted on the PH window cleaning tool to remove any foreign matter from the surface of the PH window.
- The machine is not equipped with any mechanism that automatically cleans the PH window. This makes it necessary to clean the PH window manually at regular intervals.

(2) PH window cleaning timing

- Clean the PH window when the drum unit is replaced with a new one.

3.2.7 Image processing

The following image processing procedures relating to the write section are available. For details, see “O.18.1 Scanner section image processing block diagram”.

(1) Write section image processing block diagram

- Resolution conversion processing in the main scanning direction/movement processing
- Resolution conversion processing in the sub scanning direction
- Main scanning position correction
  Speed conversion
  Modulation

4. PHOTO CONDUCTOR SECTION

4.1 Configuration

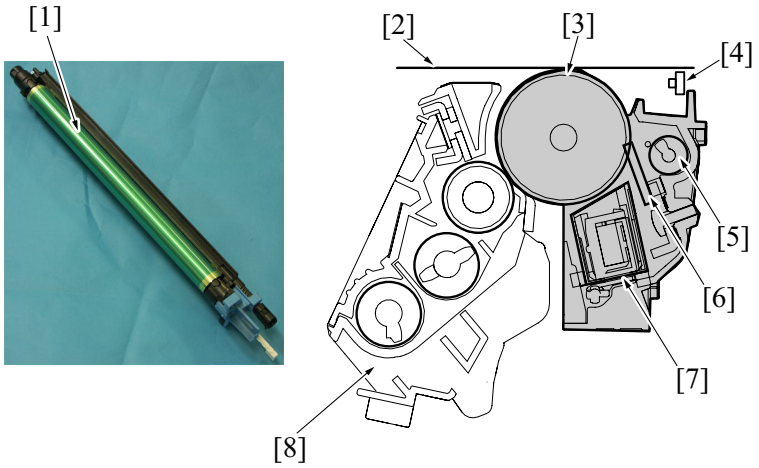

[1]	Drum unit	[2]	Transfer belt
[3]	Photo conductor	[4]	Erase LED
[5]	Toner collecting screw	[6]	Cleaning blade
[7]	Charge corona	[8]	Developing unit

4.2 Drive

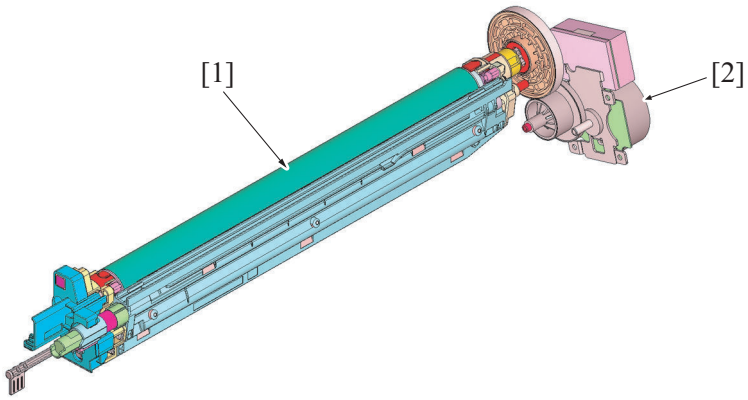

[1]	Photo conductor	[2]	Transport motor (M1)

4.3 Operation

4.3.1 Photo conductor drive mechanism

- The transport motor drives the photo conductor.
- The transport motor is the common source that provides drive to manual bypass feed, tray feed, registration roller, transfer belt, and others.
- Drive is transmitted to the photo conductor when the triangular-prism-shaped shaft is engaged with the mating coupling part.

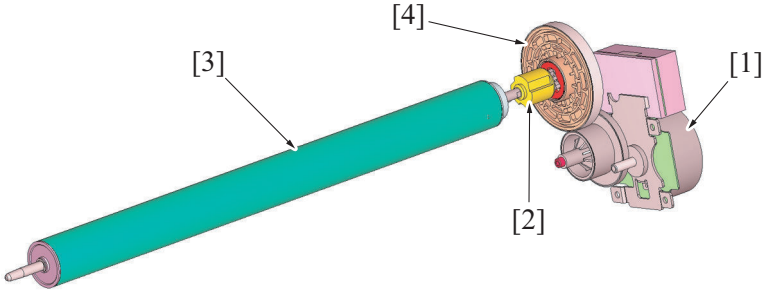

[1]	Transport motor (M1)	[2]	Coupling
[3]	Photo conductor	[4]	Photo conductor drive gear

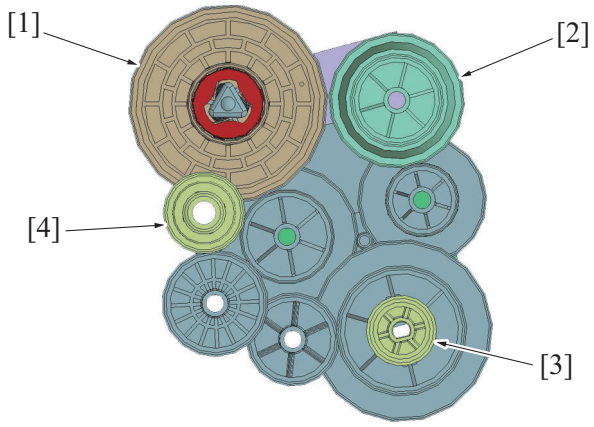

[1]	Photo conductor drive gear	[2]	Transfer belt drive gear
[3]	Registration roller drive gear	[4]	Developing unit drive gear

4.3.2 Photo conductor small amount rotation control

- To prevent the sensitivity of the photo conductor from being varied as affected by, for example, ozone, the photo conductor is rotated through a small amount so that its surface sensitivity can be kept uniform.
- The following image problems can be prevented by letting the photo conductor rotate:
  “A difference in sensitivity among different areas of the photo conductor produced as a result of humidity around the drum unit can cause a black band to occur in the image.”
  “Ozone that stagnates near the charge corona can reduce sensitivity of the photo conductor, resulting in a white band occurring in the image.”
  “Nitrogen oxides produced near the charge corona can cause light foggy background to occur.”
- If the Photo conductor is slightly rotated, the developing solenoid is switched ON and the transport motor detached, and the developing unit is not driven.

(1) Start timing

- The control is started under any of the following conditions:
  “After a print cycle (when high temperature and high humidity are detected)”
  “After Image Stabilization Control (when high temperature and high humidity are detected)”

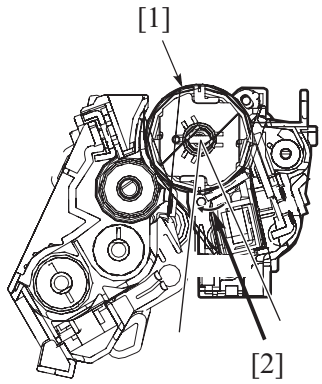

[1]	Photo conductor	[2]	12 mm

4.3.3 Erase LED control

- The toner image on the photo conductor is transferred to the transfer belt (1st transfer).
  The potential left on the photo conductor after the toner image is transferred is neutralized by turning ON the erase LED and any potential left on the surface of the photo conductor is neutralized.
- The neutralization of any residual potential on the photo conductor helps improve cleaning performance of toner left on the surface of the photo conductor.

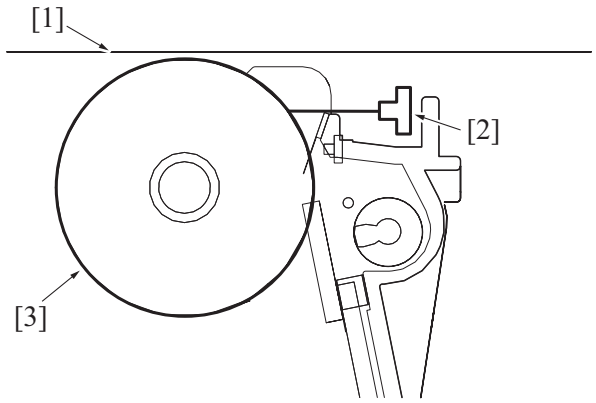

[1]	Transfer belt	[2]	Erase LED
[3]	Photo conductor	-	-

(1) Erase LED ON timing

- The erase LED is turned ON when the photo conductor starts rotating.

(2) Erase LED OFF timing

- The erase LED is turned OFF after the lapse of a predetermined period of time after the corona charge output has been shut down (that is, the erase lamp is turned OFF after all charge left on the surface of the photo conductor is neutralized).

4.3.4 Photo conductor cleaning

- The toner image on the photo conductor is transferred to the transfer belt (1st transfer).
  Part of the toner image that is not transferred is left on the surface of the photo conductor. The residual toner is scraped off by the cleaning blade.
- Toner, which has been scraped off the surface of the photo conductor, is conveyed by the toner collecting screw toward to the front of the machine. It is discharged in the waste toner box.
- The waste toner collected in the waste toner box is disposed of when a waste toner box which is detected to be full of waste toner is replaced with a new one and the used waste toner box is discarded.

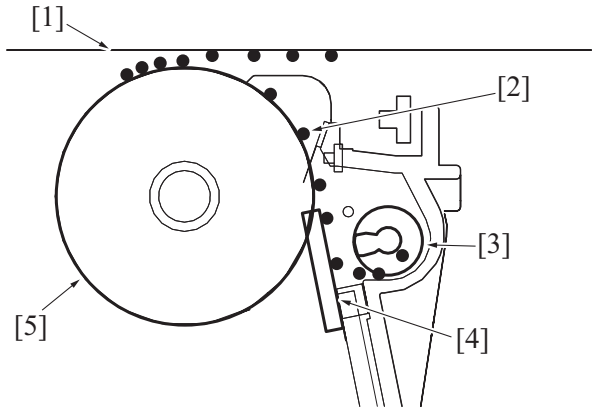

[1]	Transfer belt	[2]	Waste toner
[3]	Toner collecting screw	[4]	Cleaning blade
[5]	Photo conductor	-	-

(1) Cleaning blade

- The cleaning blade is pressed up against the surface of the photo conductor at all times. No cleaning blade retraction mechanism is provided.
- The cleaning blade scrapes residual toner off the surface of the photo conductor as the photo conductor is rotated.
- The toner collecting screw conveys the toner scraped off the surface of the photo conductor.

(2) Toner conveyance/collection mechanism

- The toner collecting screw is rotated by the driving force transmitted from the photo conductor (The toner collecting screw rotates in time with the rotation of the photo conductor.)
- Rotation of the toner collecting screw conveys toner scraped off the surface of the photo conductor toward the front of the machine.
- The toner conveyed to the front of the machine is discharged via the toner collecting port into the waste toner box.
- The toner collecting port is provided with a shutter mechanism.
  Mounting the waste toner box pushes the shutter at the toner collecting port, opening the toner collecting port. Removing the waste toner box, on the other hand, closes the shutter and toner is thereby prevented from spilling from the toner collecting port.

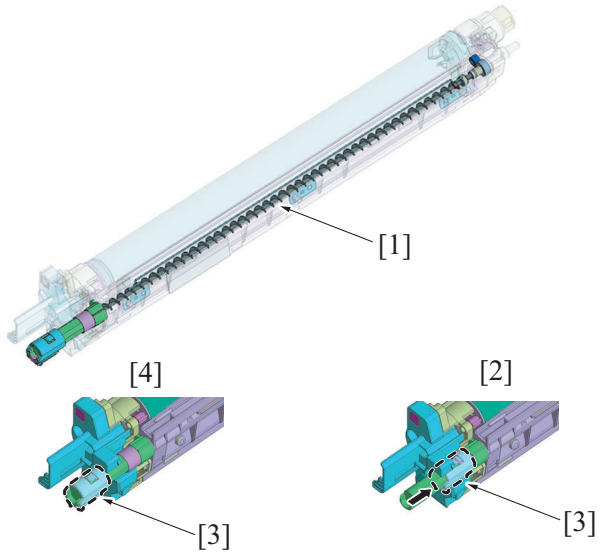

[1]	Toner collecting screw	[2]	Shutter open
[3]	Shutter	[4]	Shutter close

4.3.5 Charge corona control

- A high voltage DC negative charge is applied to the comb electrode and charge corona control plate (grid mesh) inside the charge corona. Charge discharged from the comb electrode causes the surface of the photo conductor to become uniformly charged via the charge corona control plate.
- The charge applied to the charge corona control plate is called the grid voltage (Vg) which is adjusted to an optimum valve through image stabilization control.
- The comb electrode is used for the electrode. The electrode of the comb electrode type can discharge in one direction only, which helps reduce the amount of ozone produced as compared with the wire electrode.
- The charge corona voltage supplied from the high voltage unit is applied to the comb electrode and charge corona control plate.

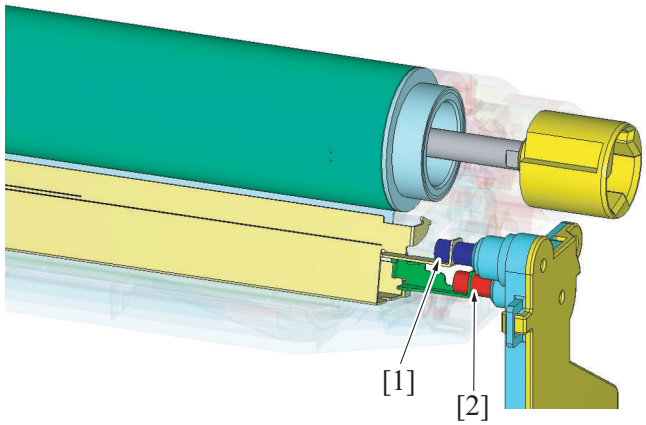

[1]	Charge corona control plate charge corona application terminal	[2]	Comb electrode charge corona application terminal

(1) Charge application start timing

- Charge is applied to the comb electrode and the charge corona control plate when the drive motor of the photo conductor (transport motor) starts rotating at a steady speed stably.

(2) Charge application end timing

- Application of the charge to the comb electrode and charge corona control plate is terminated at timing when the surface of the photo conductor that faces the transfer belt as the 1st transfer output is turned OFF moves past the charge corona control plate.

4.3.6 Charge corona cleaning

- If the comb electrode becomes contaminated, the surface of the photo conductor can no longer be charged uniformly, so that uneven charge occurs. Uneven charge of the photo conductor results in irregular streaks or other print image defects.
- The comb electrode is provided with a cleaning mechanism to prevent uneven charge of the photo conductor from occurring.

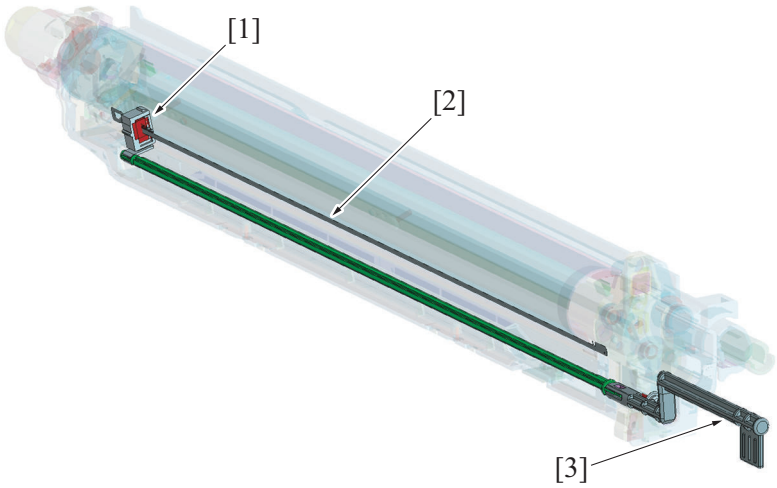

[1]	Electrode cleaning tool (cleaning portion)	[2]	Comb electrode
[3]	Electrode cleaning tool (handle portion)	-	-

(1) Electrode cleaning procedures

- Slowly pull to the front the electrode cleaning tool provided for the drum unit and push it back into the original position. This allows the cleaning material mounted on the electrode cleaning tool to remove any foreign matter from the leading edge portion of the comb electrode.
- The machine is not equipped with any mechanism that automatically cleans the electrode. This makes it necessary to clean the comb electrode manually at regular intervals.

(2) Electrode cleaning timing

- Clean the electrode of the drum unit when the toner cartridge/K is replaced with a new one.

4.3.7 Ozone filter

- A high voltage DC negative charge is applied to the comb electrode and charge corona control plate (grid mesh) inside the charge corona. Charge discharged from the comb electrode causes the surface of the photo conductor to become uniformly charged via the charge corona control plate. (Charge corona control)
- The comb electrode generates ozone as it discharges. When the photo conductor is exposed to a predetermined amount of ozone for a predetermined period of time, the sensitivity of the surface of the photo conductor becomes no longer uniform, resulting in uneven sensitivity. Uneven sensitivity on the surface of the photo conductor results in white bands or other print image defects.
- To prevent the photo conductor from developing the uneven sensitivity problem, the ozone fan is provided with an ozone filter that removes ozone from the area around the photo conductor.

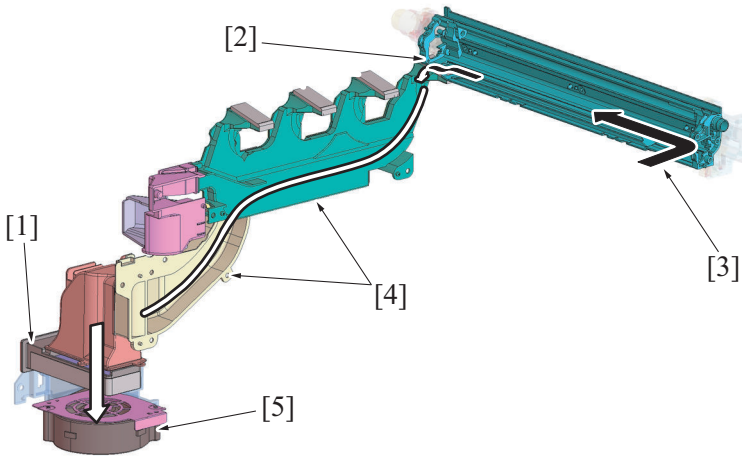

[1]	Ozone filter	[2]	Air exhaust port
[3]	Exhaust path	[4]	Exhaust duct
[5]	Ozone fan (FM13)	-	-

(1) Exhaust path

- Air is drawn through the air inlet port disposed at the front side of the photo conductor charge corona.

- The air that contains ozone in it flows through the path near the comb electrode and is discharged from the air exhaust port located at the back side of the photo conductor charge corona into the exhaust duct.
- The air containing ozone flows through the exhaust duct. The ozone filter located at the distal end of the exhaust duct decomposes the ozone in the exhaust into oxygen.
- The air, which is now harmless, is discharged out of the machine.

(2) Ozone fan rotation start timing

- The ozone fan rotates at under any of the following conditions:
  “Initial movement”
  “During a print cycle”
  “TCR sensor automatic adjustment is performed”
  “Auxiliary toner replenishing is performed”
  “During execution of image stabilization control”
  “Part of operations in the Service Mode is performed”

(3) Ozone fan rotation stop timing

- The ozone fan stops rotating after the lapse of a predetermined period of time after the ozone fan rotation conditions have ended.

(4) Ozone fan stop time setting (Service Mode)

- The time to bring the ozone fan to a stop from full-speed rotation is delayed to thereby exhaust ozone from the area around the photo conductor. It can be adjusted to fall within the range of between 0 min. and 15 min. using the Service Mode (default value 0 sec.).

(5) Ozone filter replacement timing

- Replace the ozone filter with a new one at the same time that the transfer belt unit is replaced. The replacement transfer belt unit is shipped with a replacement ozone filter.

4.3.8 Drum unit detection

The drum unit of each color of toner is provided with a DC set board. The board detects set of the corresponding drum unit.

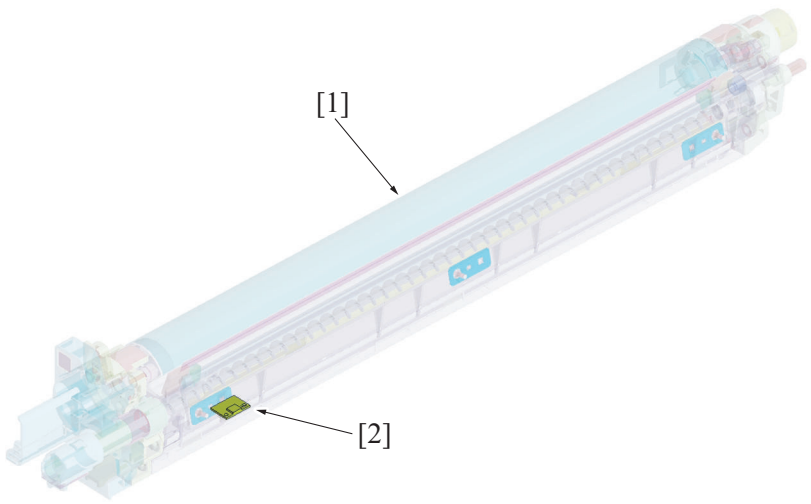

[1]	Drum unit	[2]	DC set board

(1) Unit mounting detection

(a) Detection timing

- The unit mounting detection control is performed under any of the following conditions:
  “The power switch is turned ON (with the front door and right door are closed)”
  “The front door or right door is opened and closed with the power switch in ON position”

(b) Operation when it is detected that no units are mounted

- The message “Drum Unit Installation Error” appears on the control panel and the machine prohibits initiation of any new print cycle. The message “Drum Unit Installation Error” disappears as soon as a drum unit is mounted.

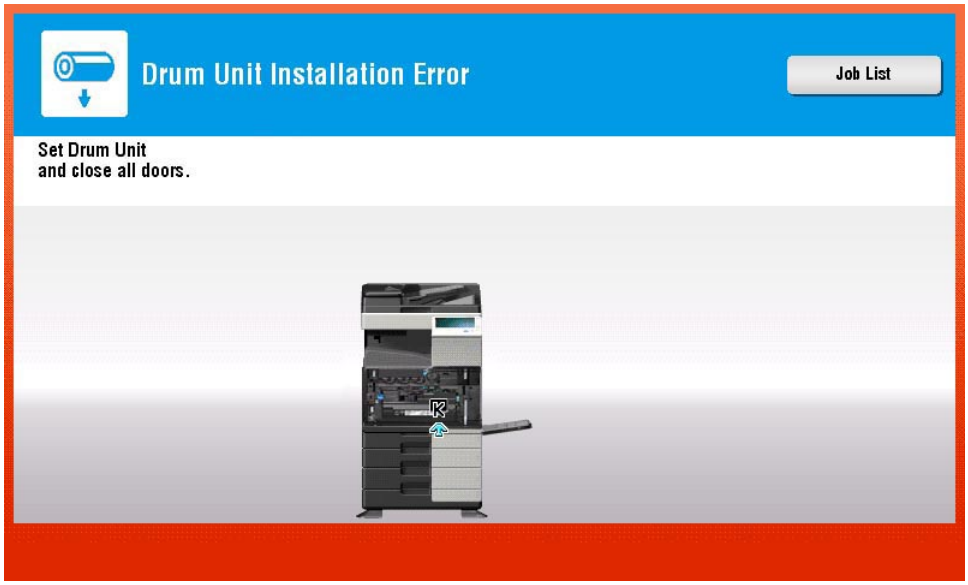

(2) New article detection

(a) Detection timing

- The new article detection control is performed if it is determined through the “unit mounting detection” control that the drum unit is correctly mounted in place.

(b) Operation when the drum unit is determined not to be new

- The new article detection control is terminated.

(c) Operation when the drum unit is determined to be new

- The life counter of the drum unit is reset to zero and the control proceeds to the life detection control.
- The result of the new article detection is recorded in the printer control board of the machine.
- The life counter of the drum unit is recorded in the printer control board of the machine.

(3) New article detection-disabled mode

- No new article detection control is performed for the drum unit when the new article detection-disabled mode is used.
- The new article detection-disabled mode should be used only for troubleshooting purposes.

NOTE

- **See “I.12.3.9.(3).(a) New Release Disable mode” for more detailed operating precautions.**

4.3.9 Drum unit life detection

NOTE

- **On this machine, since the life stop and the life warning display are specified to [Off] by default, a warning display does not appear and the print job does not stop even when the life is reached.**
  To confirm the life of each unit, check the counter data and configure the following settings. [Service Mode] -> [Counter/Data] -> [Life]
- **Life related display default setting**
  Life Display (Near Life Display Settings): Display
  Life Cycle Display Warning: Off
  Life Stop: Off

(1) Counter life determination

- Each of the printed counter and the drum rotation time counter has its own threshold value to determine its own life. If the printed counter or drum rotate time counter value reaches the threshold, the machine determines that the drum unit has reached a new state.

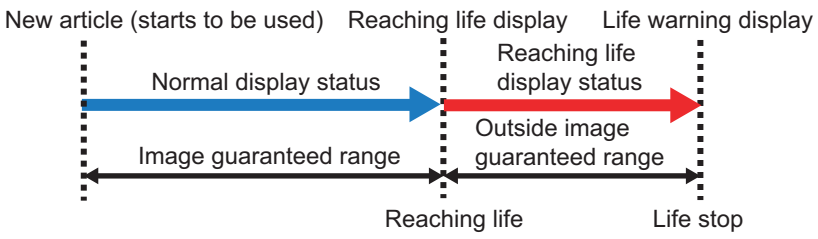

(2) Life determination timing

- The life determination control is performed under any of the following conditions:

"The power switch is turned ON (with the front door and right door are closed)"
"The machine exits the sleep mode"
"The front door or right door is opened and closed with the power switch in ON position"
"The counter is updated (during rotation of photo conductor)"

(3) Life display (Display and settings for unit to be replaced)

(a) Reaching life display

- The life reaching screen appears when the count of the printed counter or the drum rotation time counter reaches the reaching life threshold (print enabled, outside image guaranteed range).

(b) Reaching life display settings

- On this machine, since the reaching life display is specified to [Display] by default, a display appears when the life is reached. If necessary, configure the reaching life display settings.[Service Mode] -> [System 2] -> [Unit change] -> [Near Life Display Settings]

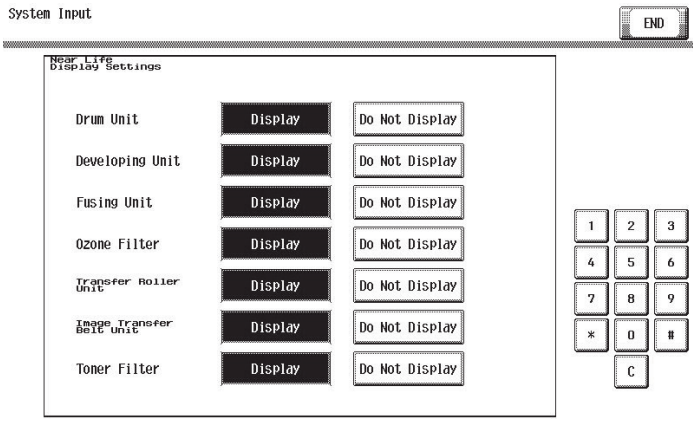

(c) Life cycle display warning

- The life stop screen appears when the count of the printed counter or the drum rotation time counter reaches the life stop threshold (print prohibited).

NOTE

- **The life stop screen differ from the screen that "User" is selected on System2/Unit Change in Service Mode.**

(d) Life cycle display warning and Life stop settings

- On this machine, since the life cycle display warning and the life stop are specified to [Off] by default, a warning display does not appear and the print job does not stop even when the life is reached.
- If necessary, configure the life stop settings. [Service Mode] -> [Enhanced Security] -> [Life Stop Setting]

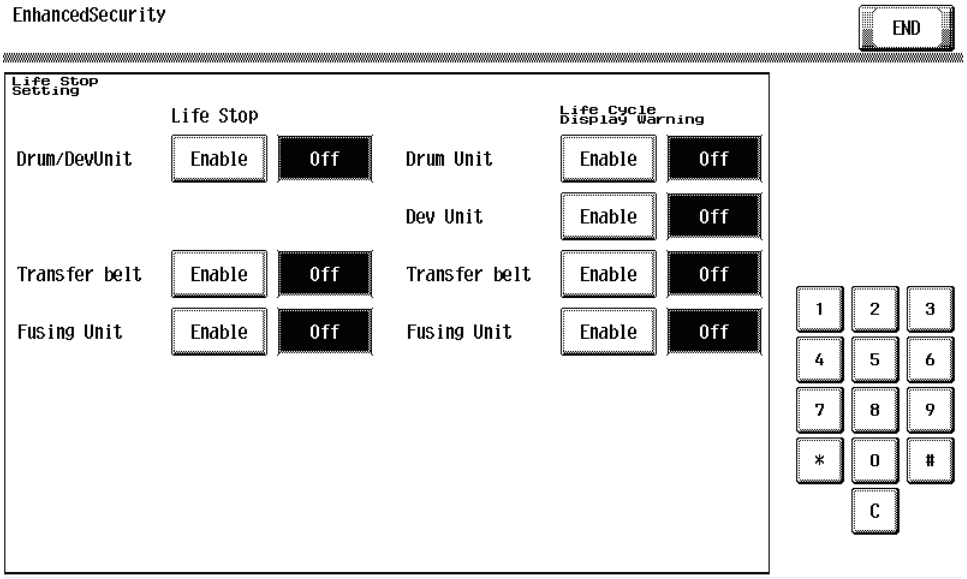

4.3.10 Ozone filter new article detection

- The ozone filter is not provided with any new article detection mechanism. If the ozone filter is replaced with a new one, therefore, the following setting must be made in "Counter/ Life" of the Service Mode: perform "New Release" of "Image Transfer Belt Unit". The life counter of the ozone filter is reset to zero by performing "New Release" of "Image Transfer Belt Unit".

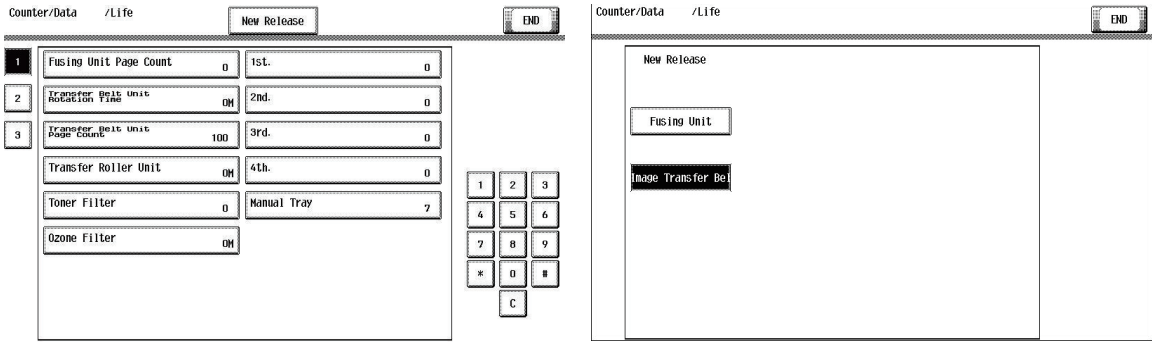

4.3.11 Ozone filter life detection

- The life counter of the ozone filter controls detection of life of the transfer belt (transport motor).
- The counter value is recorded in the printer control board of the machine.
- The ozone filter is shipped with the transfer belt unit.

(1) Life determination

- If the count of the transfer belt rotation time counter reaches the threshold, the machine determines that the ozone filter has reached a new state.

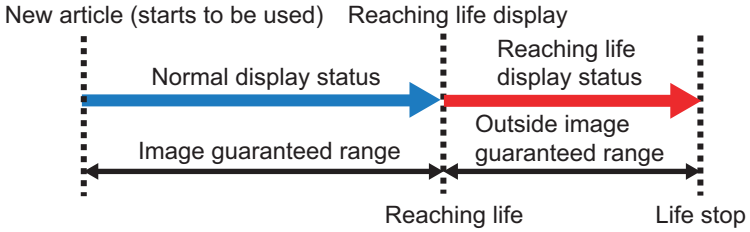

(2) Life display (Display and settings for unit to be replaced)

(a) Reaching life display

- The life reaching screen appears when the transfer belt rotation time counter reaches the reaching life threshold (print enabled, outside image guaranteed range)



(b) Reaching life display settings

- On this machine, since the reaching life display is specified to [Display] by default, a display appears when the life is reached.
  If necessary, configure the reaching life display settings.[Service Mode] -> [System 2] -> [Unit change] -> [Near Life Display Settings]

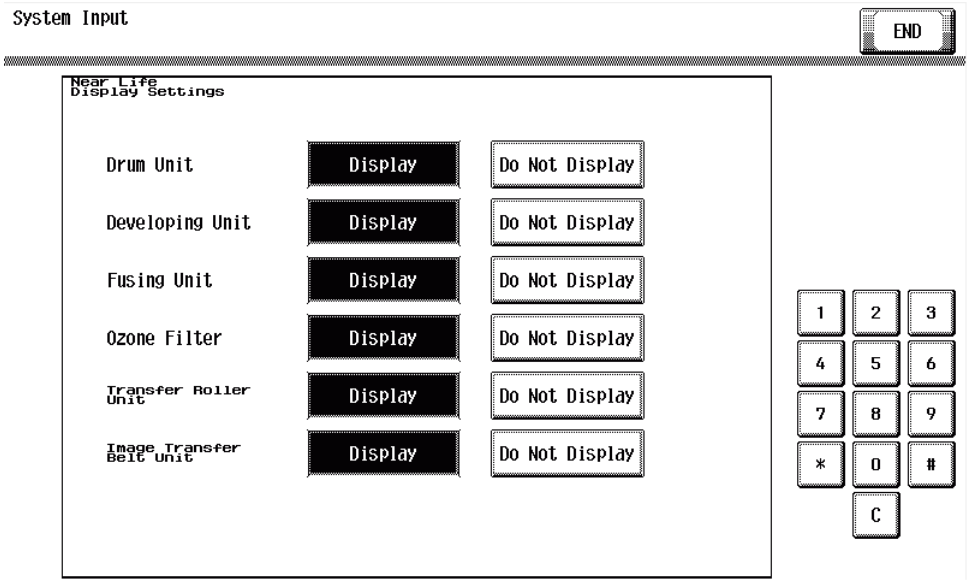

4.3.12 Number of field standard printed pages

- The number of field standard printed pages is specified for this machine based on calculation made by assuming field standard job modes as determined using the print volume and use conditions of the user. Note, however, that the number of printed pages of the drum unit varies depending on how the user uses the machine.
- For details, see “F.5.1 Life value of consumables and parts”.

5. DEVELOPING SECTION

5.1 Configuration

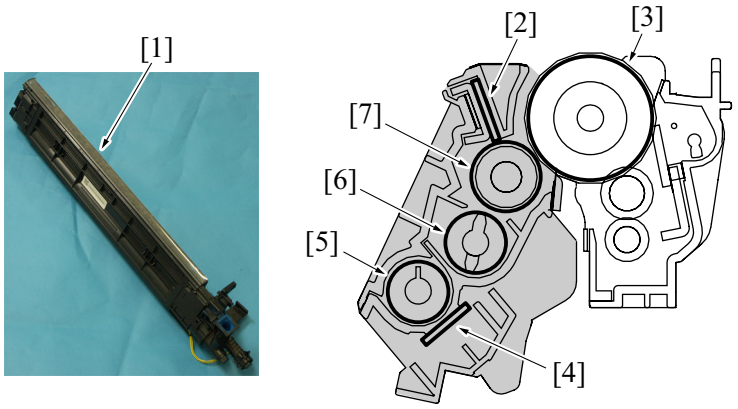

[1]	Developing unit	[2]	Doctor blade
[3]	Photo conductor	[4]	TCR sensor
[5]	Toner supply screw 1	[6]	Toner supply screw 2
[7]	Developing roller	-	-

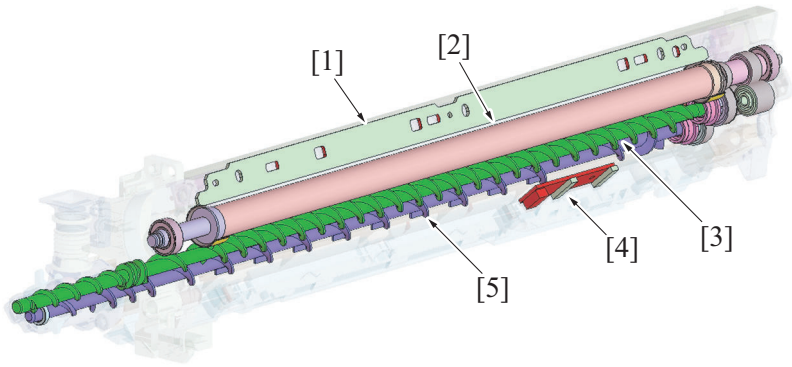

[1]	Doctor blade	[2]	Developing roller
[3]	Toner supply screw 2	[4]	TCR sensor
[5]	Toner supply screw 1	-	-

5.2 Drive

5.2.1 Developing section drive mechanism

- Rotation of the transport motor transmits drive to the developing drive gear, which drives developing roller.

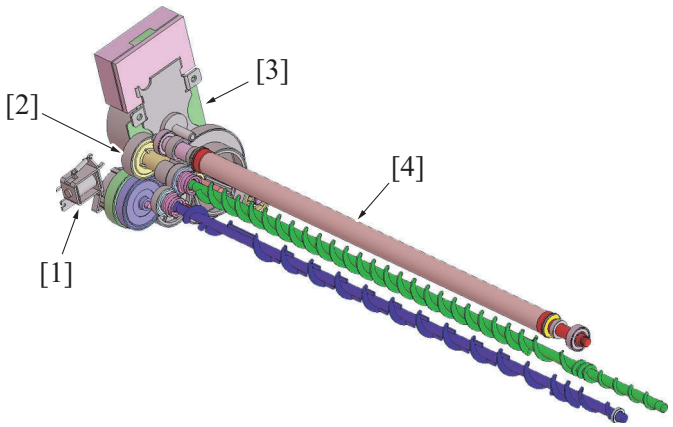

[1]	Developing solenoid (SD4)	[2]	Developing drive gear
[3]	Transport motor (M1)	[4]	Developing roller

5.3 Operation

5.3.1 Developing unit pressure/releases mechanism

- A mechanism is provided that releases the developing unit from the PC drum to prevent the photo conductor from being damaged when the drum unit is to be removed.
- Rotating the release lever clockwise will cause the rib fixed to the lever to fit into the groove in the developing unit, so that the developing unit is pressed against the drum unit.
- Rotating the release lever counterclockwise will cause the rib fixed to the lever to leave the groove in the developing unit, so that the developing unit is released from the drum unit.

NOTE

- **Whenever operating the release lever, be sure to place the charger cleaning tool in its home position (pushed in position). A charger cleaning tool, withdrawn from its home position, interferes with the release lever and can therefore be damaged.**

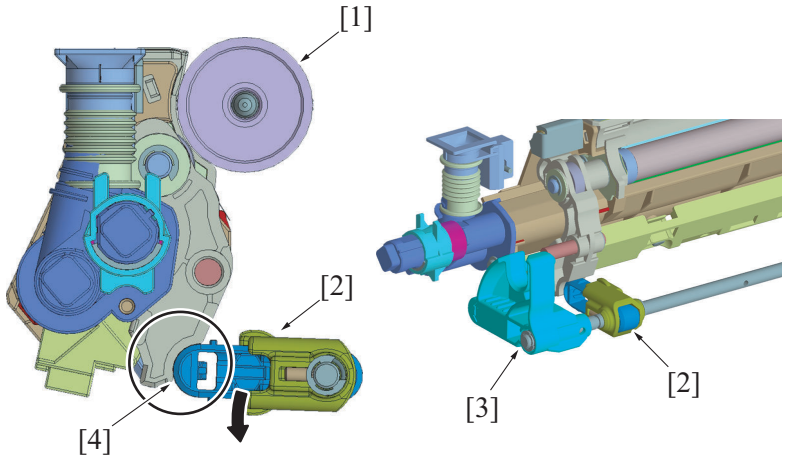

[1]	Photo conductor	[2]	Lib
[3]	Release lever	[4]	Groove

5.3.2 Developer flow

1. Toner replenished via the toner replenishing port located at the front side of the machine is fed to the toner supply screw 1.
2. The developer is conveyed toward the rear of the unit, while being agitated and electrically charged, by the toner supply screw 1.
3. The TCR sensor installed on the underside of the developing unit detects toner to carrier (T/C) ratio during this time. If the T/C ratio is lower than a predetermined value, toner is replenished.
4. The developer, fed to the rear of the developing unit, is conveyed further onto the toner supply screw 2.
5. The developer fed to the toner supply screw 2 is conveyed onto the developing roller because of the magnetic pole positioning of the developing roller.
6. The doctor blade then controls the height of the developer brush to ensure that the developer on the developing roller levels out.
7. Only the toner contained in the developer sticks to the electrostatic latent image on the surface of the photo conductor. The developer that is left on the developing roller is returned to the toner supply screw 2 by the magnetic pole positioning of the developing roller.
8. The part of the circulating developer is collected in the waste toner box through the toner collecting port located at the front side of the toner supply screw 2. The toner collecting port is provided with a shutter mechanism. Mounting the waste toner box pushes the shutter at the toner collecting port, opening the toner collecting port. Removing the waste toner box, on the other hand, closes the shutter and toner is thereby prevented from spilling from the toner collecting port. (For more details, see O.5.3.3 Auto refining developing system and O.9.3.6 Waste toner spillage prevention shutter.)

NOTE

- **The toner replenishing port of the developing unit is not provided with a shutter mechanism (but the toner hopper section is provided with a shutter).**
- **When removing the developing unit, the developing unit must be held in a horizontal position with care not to allow toner to spill from the toner replenishing port.**

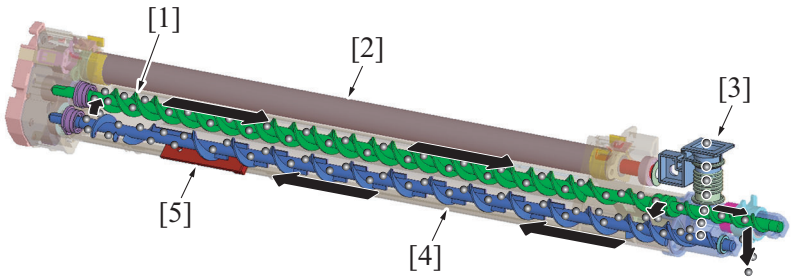

[1]	Toner supply screw 2	[2]	Developing roller
[3]	Toner replenishing port	[4]	Toner supply screw 1
[5]	TCR sensor	-	-

5.3.3 Auto refining developing system

- The developing unit incorporates the auto refining developing system.
- The bottle of toner cartridge is packed with both toner and carrier and the developing unit is replenished with fresh carrier at the same time that it is replenished with toner.
- Excess carrier in the developing unit is discharged, thereby inhibiting carrier left in the developing unit from being deteriorated and maintaining stable image quality for an extended period of time.

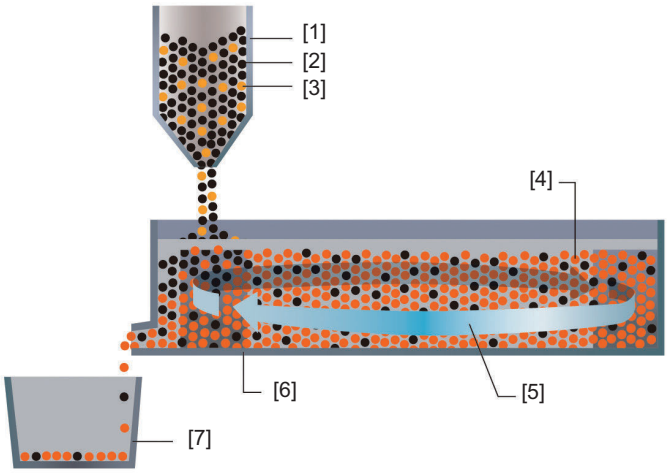

[1]	Toner bottle	[2]	Toner
[3]	New carrier	[4]	Low degree of deterioration of entire carrier
[5]	Circulation and agitation	[6]	Developing unit
[7]	Waste toner box	-	-

5.3.4 Developing bias

- The developing bias voltage (Vdc) is applied to the developing roller so that an adequate amount of toner is attracted onto the surface of the photo conductor.
- In addition to the negative DC component, AC voltage is applied during development to help toner to be attracted more easily to the surface of the PC drum.
- The developing bias (Vdc) is supplied from high voltage unit.
- The developing bias voltage supplied from the high voltage unit is applied to the developing roller of toner via the metal shaft of the developing drive gear.

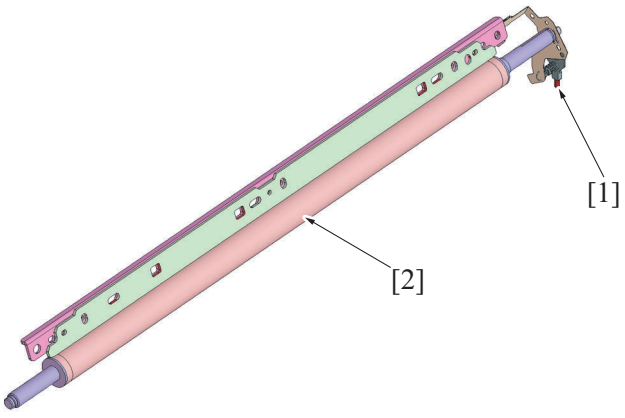

[1]	Developing bias voltage application terminal	[2]	Developing roller

(1) Service Mode

(a) Grad/Dev AC Bias V Selection

- The “Grad/Dev AC Bias V” can be changed by changing the setting of “Imaging Process Adjustment/ Grad/Dev AC Bias V Selection” of the Service Mode. This provides development performance that responds to various types of environment of the users.
- Turning ON the “Grad/Dev AC Bias V Selection” allows the “Grad/Dev AC Bias V” to be decreased down to a voltage value lower than the ordinary specified value.
- With the ordinary specified value set for the “Grad/Dev AC Bias V” in low atmospheric pressure environments, such as at high altitudes, leak could occur, resulting in white dots. Leak, and thus white dots on the image, can be prevented from occurring by lowering the “Grad/Dev AC Bias V”.

- For details of the Service Mode, see "I.11.5.11 Grad/Dev AC Bias V Selection".

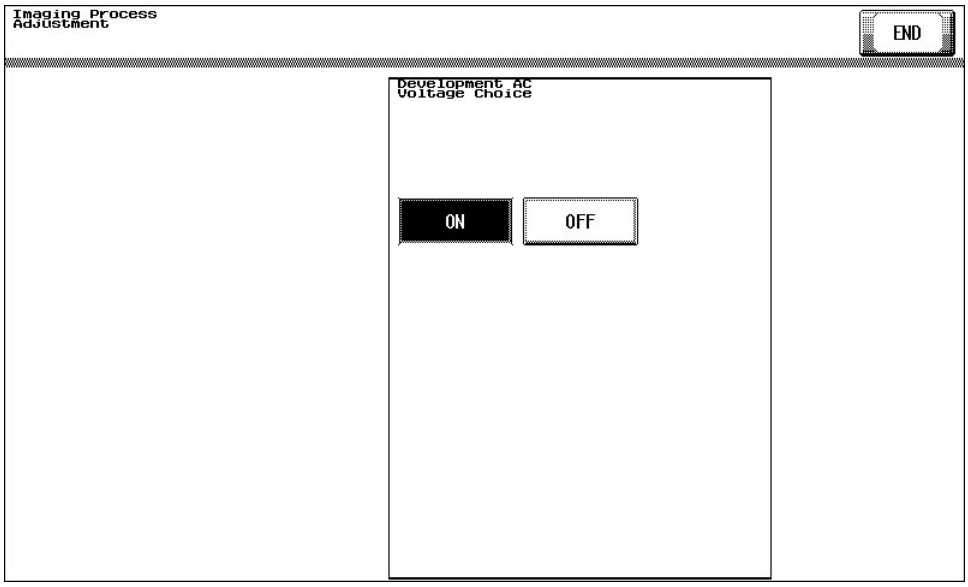

5.3.5 Toner scattering prevention

- The toner scattering prevention plate and toner scattering prevention sheet are installed in an area around the developing roller, functioning to prevent toner from scattering.

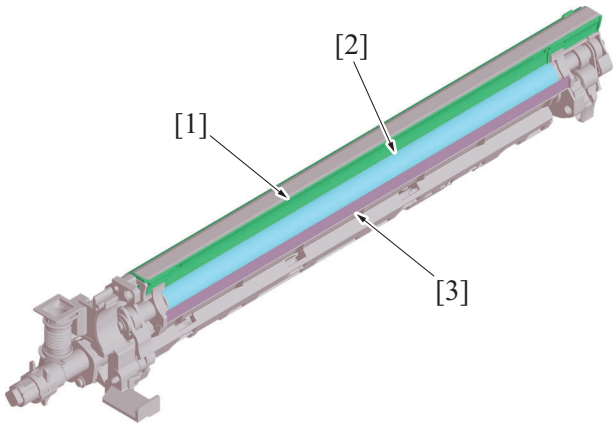

[1]	Toner scattering prevention plate	[2]	Developing roller
[3]	Toner scattering prevention sheet	-	-

5.3.6 Developing cooling

- The transfer belt cleaner cooling fan is provided to circulate air through the inside of the machine, so that the areas around the developing unit, drum unit, toner hopper, and the transfer belt unit can be cooled.

5.3.7 Toner density control

- The TCR sensor is mounted on the underside of the developing sections. The TCR sensor is a non-contact magnetic type. Each of these sensors detects toner-to-carrier ratio (T/C) of the developer. The reading is used for determining the amount of toner supplied.
- Only when a new developing unit is installed in the machine, an automatic adjustment (calibration) is made of each of these TCR sensors. The automatic adjustment of TCR sensors cannot be done at your own discretion.
- The target T/C ratio is 6.5 ± 1.5%.
- The magnetic permeability of the carrier in the developer is measured to determine the T/C.
- The TCR sensor is integrated with the developing unit. When the TCR sensor is to be replaced with a new one, the entire developing unit must be replaced.
- For replenishment of toner to the developing unit, see "O.6.3.4 Auxiliary toner replenishing control for toner hopper".

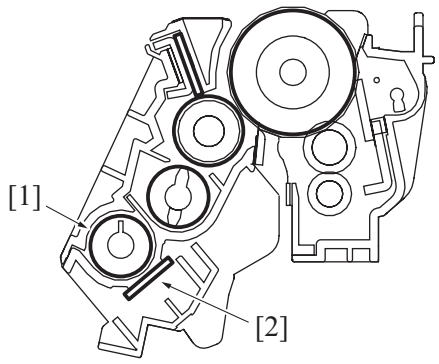

[1]	Toner supply screw1	[2]	TCR sensor

5.3.8 Developing unit detection

- The developing unit of each color of toner is provided with a TCR sensor. The sensor detects different states of the corresponding developing unit.

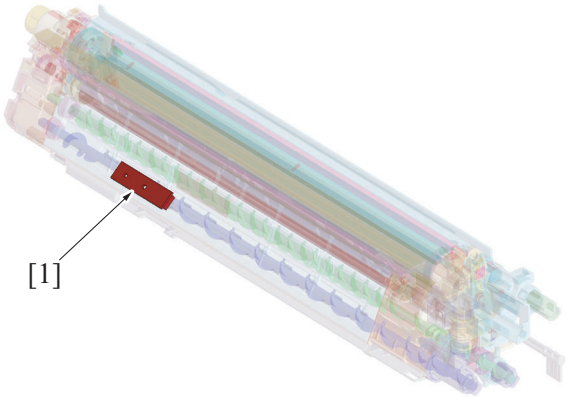

[1]	TCR sensor	-	-

(1) Unit mounting detection

- The TCR sensor detects the mounting condition of the developing unit using the voltage value of the destination signal.
- When developing unit is detected in the mounted condition, control now proceeds to the “new article detection control”.

(a) Detection timing

- The unit mounting detection control is performed under any of the following conditions:
  “The power switch is turned ON (with the front door and right door are closed)”
  “The front door or right door is opened and closed with the power switch in ON position”

(b) Operation when it is detected that no units are mounted

- The message “Developing Unit Installation Error” appears on the control panel and the machine prohibits initiation of any new print cycle.
  The message “Developing Unit Installation Error” disappears as soon as a developing unit is mounted.

(2) New article detection

- The TCR sensor detects whether the developing unit is new or not using the new article detection signal.

(a) Detection timing

- The new article detection control is performed if it is determined through the “unit mounting detection” control that the developing unit is correctly mounted in place.

(b) Operation when the developing unit is determined not to be new

- The new article detection control is terminated.

(c) Operation when the developing unit is determined to be new

- The TCR sensor automatic adjustment control (calibration) is performed.
- The image stabilization control is performed.
- The life counter of the developing unit is reset to zero.
- After the above controls are performed, the operation proceeds to the life detection control.

- The result of the new article detection is recorded in the printer control board of the machine.
- The life counter of the developing unit is recorded in the printer control board of the machine.

(3) New article detection-disabled mode

- The new article detection-disabled mode is used when a new developing unit is temporarily used for performing troubleshooting procedures of a machine.
- No new article detection control is performed for the developing unit when the new article detection-disabled mode is used.
- The new article detection-disabled mode should be used only for troubleshooting purposes.

NOTE

- **See "I.12.3.9.(3) Details of Each Function" for more detailed operating precautions.**

5.3.9 Developing unit life detection

NOTE

- **On this machine, since the life stop and the life warning display are specified to [Off] by default, a warning display does not appear and the print job does not stop even when the life is reached.**
  To confirm the life of each unit, check the counter data and configure the following settings. [Service Mode] -> [Counter/Data] -> [Life]
- **Life related display default setting**
  Life Display (Near Life Display Settings): Display
  Life Cycle Display Warning: Off
  Life Stop: Off

(1) Counter life determination

- If the count of either one of these counters reaches the threshold, the machine determines that the developing unit has reached a new state.

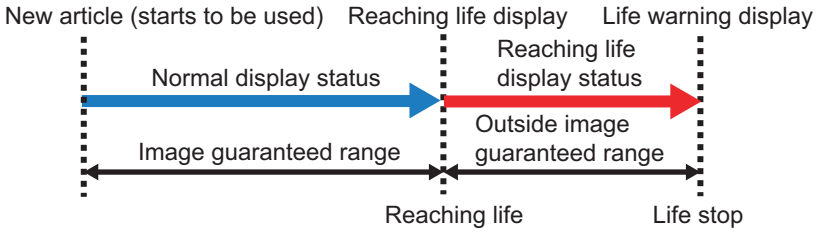

(2) Life determination timing

- The life determination control is performed under any of the following conditions:
  "The power switch is turned ON (with the front door and right door are closed)"
  "The machine exits the sleep mode"
  "The front door or right door is opened and closed with the power switch in ON position"
  "The counter is updated"

(3) Life display (Display and settings for unit to be replaced)

(a) Reaching life display

- When the printed counter value is reached at reaching life threshold value, the life reaching screen will be displayed. (Print cycle is enabled but the image is not guaranteed)

NOTICE

- Life_display_example(DrumUnit).pdf

(b) Reaching life display settings

- On this machine, since the reaching life display is specified to [Display] by default, a display appears when the life is reached.
  If necessary, configure the reaching life display settings.[Service Mode] -> [System 2] -> [Unit change] -> [Near Life Display Settings]

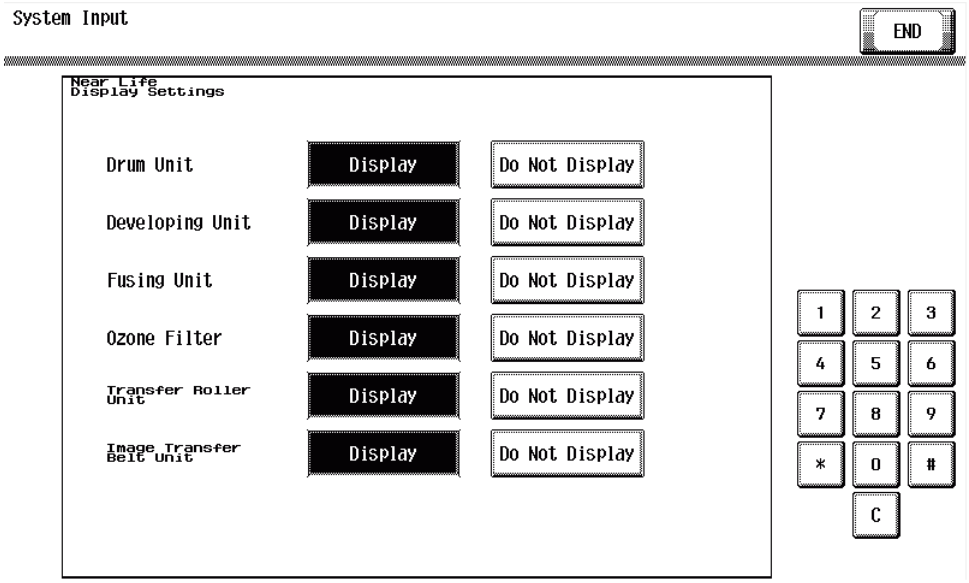

(c) Life cycle display warning

- When the printed counter value is reached at life stop threshold value, the life stop screen will be displayed. (Print cycle is inhibited)

(d) Life cycle display warning and Life stop settings

- On this machine, since the life cycle display warning and the life stop are specified to [Off] by default, a warning display does not appear and the print job does not stop even when the life is reached.
- If necessary, configure the life stop settings. [Service Mode] -> [Enhanced Security] -> [Life Stop Setting]

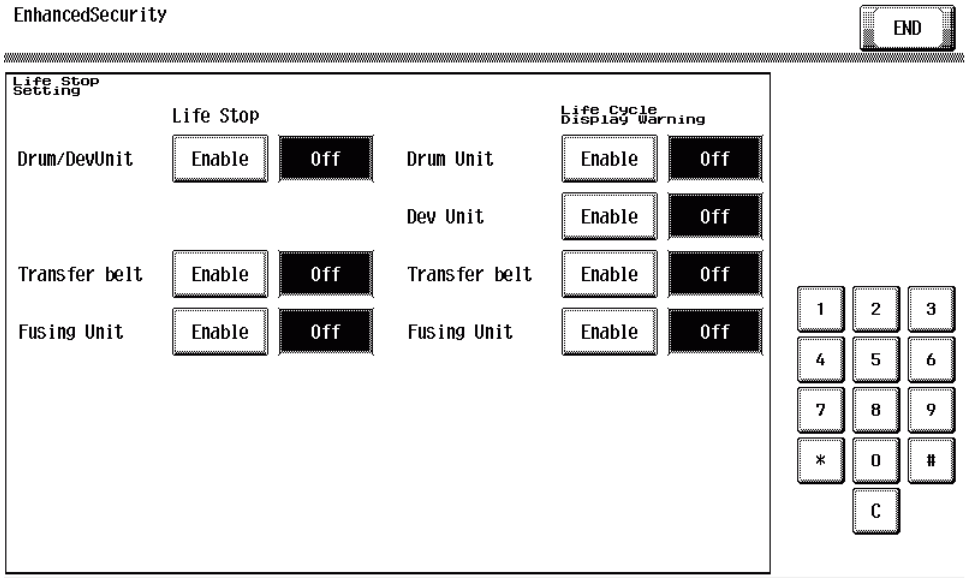

5.3.10 Number of field standard printed pages

- The number of field standard printed pages is specified for this machine based on calculation made by assuming field standard job modes as determined using the print volume and use conditions of the user. Note, however, that the number of printed pages of the developing unit varies depending on how the user uses the machine.
- For details, see “F.5.1 Life value of consumables and parts”.

6. TONER SUPPLY SECTION

6.1 Configuration

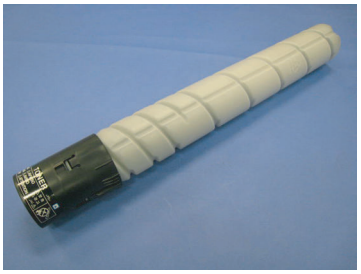

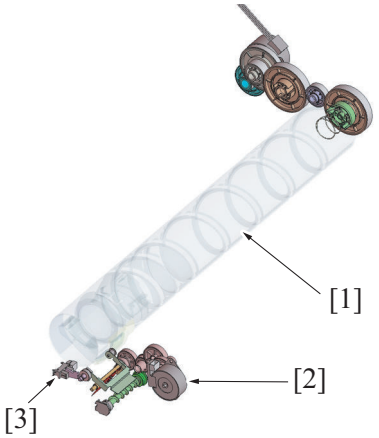

[1]	Toner bottle	[2]	Toner supply motor (M6)
[3]	Toner empty sensor (PS31)	-	-

6.2 Drive

6.2.1 Toner bottle drive

- Rotation of the toner bottle motor causes the toner bottle to rotate. The interior of the toner bottle is in spiral form. As the toner bottle rotates, toner inside the toner bottle is conveyed toward the toner replenishing port located at the front side, so that the toner hopper is replenished with toner from the toner bottle.

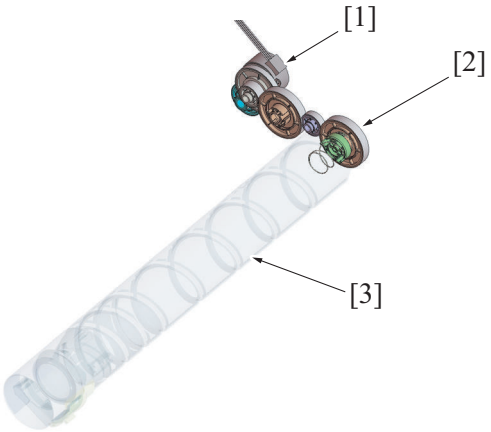

[1]	Toner bottle motor (M10)	[2]	Toner bottle drive gear
[3]	Toner bottle	-	-

6.2.2 Toner hopper drive

- Rotation of the toner supply motor causes the toner agitating blade and toner conveying screw inside the toner hopper to rotate.
- Toner conveyed into the toner hopper is agitated by the toner agitating blade.
- As the toner conveying screw rotates, toner is conveyed onto the toner replenishing port located at the front side inside the toner hopper, so that the toner is fed into the developing unit via the toner replenishing pipe.

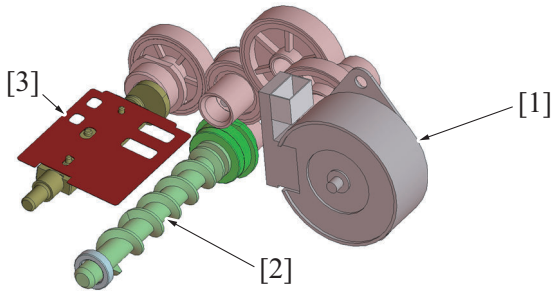

[1]	Toner supply motor (M6)	[2]	Toner conveying screw
[3]	Toner agitating blade	-	-

6.3 Operation

6.3.1 Toner replenishing overview

- The toner replenishing mechanism incorporated in this machine has a two-step replenishing structure, one replenishing the toner hopper with toner from the toner bottle and the other replenishing the developing unit with toner from the toner hopper.
- The toner bottle incorporates the auto refining developing system.
- The toner bottle is packed with both toner and carrier and the developing unit is replenished with fresh carrier at the same time that it is replenished with toner. Excess carrier in the developing unit is discharged, thereby inhibiting carrier left in the developing unit from being deteriorated and maintaining stable image quality for an extended period of time.
- For details of the auto refining developing system, see “O.5.3.3 Auto refining developing system”.

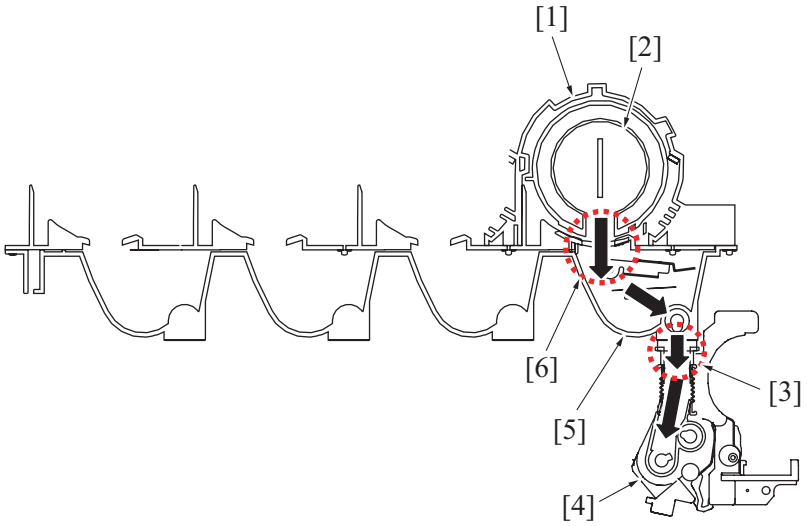

[1]	Toner cartridge	[2]	Toner bottle
[3]	Replenishing the developing unit with toner from the toner hopper	[4]	Developing unit
[5]	Toner hopper	[6]	Replenishing the toner hopper with toner from the toner bottle

6.3.2 Toner replenishing from toner bottle to toner hopper

(1) Toner replenishing mechanism

- Need for toner replenishing from the toner bottle to the toner hopper is determined using the toner empty sensor that is either unblocked or blocked.
- If the toner empty sensor is blocked, the machine determines that it is a near empty condition. Then, the toner bottle motor is energized and a toner replenishing sequence is started.
- The toner hopper of toner is provided with a toner empty sensor.
- Each toner empty sensor is blocked or unblocked by an actuator dedicated to it. The actuator is moved up or down by a cam disposed coaxially on the toner agitating blade and the vertical movement of the cam is transmitted to the detection plate. The actuator mounted on the detection plate is operatively associated with the vertical movement of the detection plate, which blocks or unblocks the toner empty sensor.

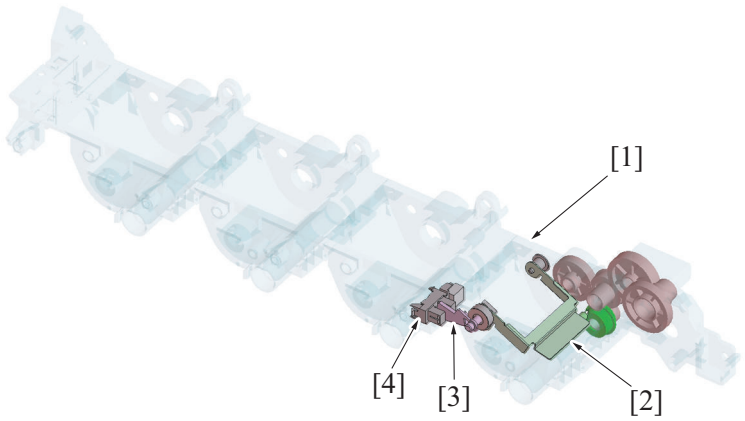

[1]	Toner hopper	[2]	Detection plate
[3]	Actuator	[4]	Toner empty sensor (PS31)

(2) Toner replenishing control

- The toner replenishing control is started when the drive of the toner bottle motor is started.
- The output of the toner empty sensor is monitored for a predetermined period of time. If the toner empty sensor is turned ON from the OFF state, during the predetermined period of time, the machine determines that the “toner hopper runs out of toner (or there is only a small amount of toner left in the toner hopper)” and increments the near empty counter by one. The toner bottle motor is then rotated for a predetermined period of time, so that toner is supplied from the toner bottle to the toner hopper.
- If the toner empty sensor remains OFF, the machine determines that “toner is still available for use in the toner hopper”, resetting the near empty counter to zero.
- These operations are repeated and, when the near empty counter reaches 1 to 3, the machine determines that the toner hopper is in the near empty condition.

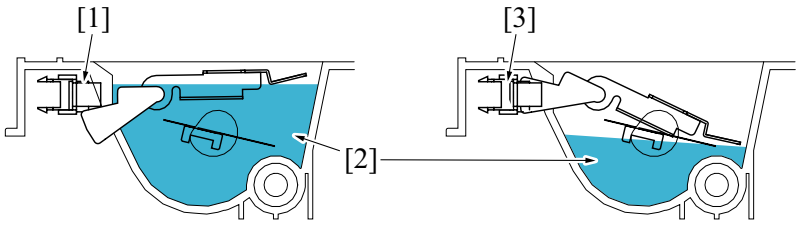

[1]	Toner empty sensor: OFF	[2]	Toner
[3]	Toner empty sensor: ON	-	-

NOTE

- **When the toner bottle is soon to run out of toner (near-empty condition), a sequence is started to replenish the toner hopper with toner.**
- **Furthermore, the toner in the toner hopper may reach the upper limit. In that case, the toner will not drop from the toner bottle even if the toner bottle rotates, and will not be supplied to exceed the toner hopper capacity.**

6.3.3 Toner replenishing from toner hopper to developing unit

(1) Toner replenishing control

- Control of replenishing the developing unit with toner from the toner hopper is performed only when the developing unit is driven.
- The toner replenishing time (the amount of toner supplied) during the toner replenishing control is determined based on the T/C ratio detected by the TCR sensor (noncontact magnetic type) disposed at the developing unit of toner and the amount of toner to be consumed (estimated) for the image to be printed.
- If replenishing is interrupted by a paper misfeed, the front door opened or closed, or any similar event, the required replenishing time is carried forward to the next replenishing control sequence.
- For details of the TCR sensor, see “O.5.3.7 Toner density control”.

(2) Toner replenishing mechanism

- The toner supply motor drive the toner conveying screws and the toner agitating blades provided in the toner hoppers of toner.
- The toner supply motor drives the toner conveying screw and the toner agitating blade.
- The toner agitating blade rotates to agitate toner in the toner hopper.
- The toner conveying screw rotates to replenish the developing unit with toner.

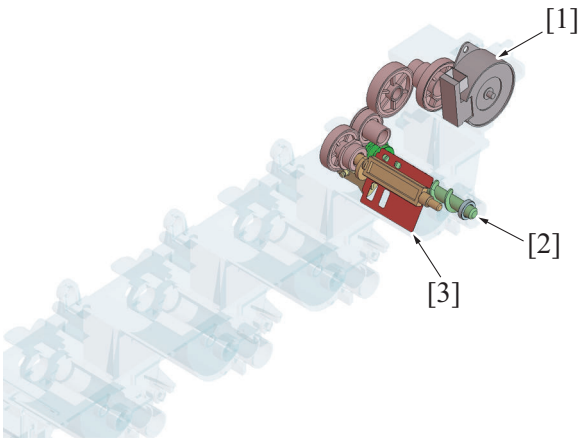

[1]	Toner supply motor (M6)	[2]	Toner conveying screw
[3]	Toner agitating blade	-	-

(3) Toner agitating blade drive

1. Toner conveying screw is rotated by the driving of the toner supply motor.
2. The rotation of the toner conveying screw is transmitted to the toner agitating blade drive gear, which results in the toner agitating blade being rotated. The toner agitating blade rotates to agitate toner in the toner hopper.
3. The cam mounted coaxially with the toner agitating blade moves the detection plate and actuator up and down.

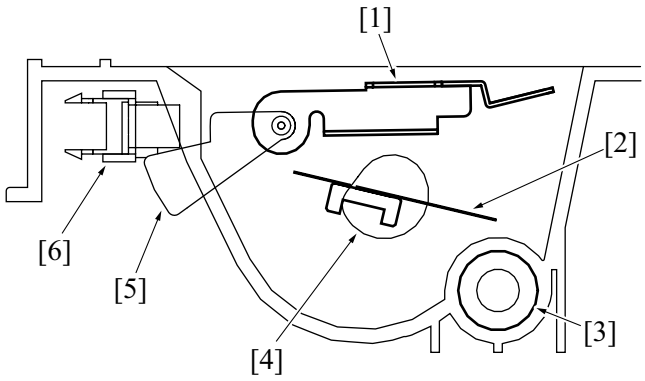

[1]	Detection plate	[2]	Toner agitating blade shaft
[3]	Toner conveying screw	[4]	Cam (operatively connected to toner agitating blade shaft)
[5]	Actuator	[6]	Toner empty sensor

6.3.4 Auxiliary toner replenishing control for toner hopper

- If the amount of toner available in the toner hopper is likely to be decreasing, control is performed to supply toner forcibly from the toner bottle to the toner hopper.
- The machine prohibits initiation of any new print cycle while the auxiliary toner replenishing control is being executed.

(1) Toner hopper auxiliary toner replenishing control execution timing

- The toner bottle motor is rotated for a predetermined period of time to supply toner from the toner bottle to the toner hopper under any of the following conditions:
  “The toner replenishing menu is performed from the Service Mode”
  “The toner cartridge is replaced with a new one after a toner empty condition is detected in the toner cartridge (toner empty reset control is performed)”
  “The developing unit is replaced with a new one (developing unit new article detection control is performed)”

(2) Toner hopper auxiliary toner replenishing control end timing

- The auxiliary toner replenishing control is terminated under any of the following conditions:
  “A predetermined period of time elapses after the toner bottle motor has been energized”
  “The front door is opened and closed”
  “An error or malfunction occurs”
  “The machine enters the power save or sleep mode”

6.3.5 Auxiliary toner replenishing control for developing unit

- When the print process begins, if the T/C ratio is lower than the designated value, toner is forced to be replenished from the toner hopper to the developing unit until the designated T/C ratio is reached.

- Printing is disabled while the toner supply is being replenished.
- In the following conditions, forced toner replenishment stops.
  "Where the T/C ratio reaches the designated value"
  "Where the forced toner replenishment to the developing unit has been repeated for 10 sets"
  "Where the toner bottle is detected to be empty"

(1) Operation flow

- When the auxiliary toner replenishing control is performed, the toner hopper is agitated, the T/C ratio is calculated by the TCR sensor of toner, and toner is replenished from the toner bottle.
- The auxiliary toner replenishing control is performed for a maximum of about 4 min.

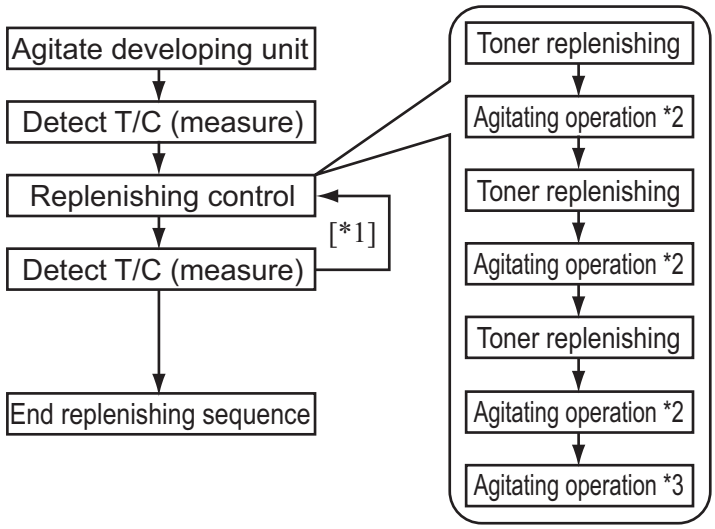

- *1: If a predetermined T/C is not reached, return to replenishing control (a maximum of 10 times).
- *2: Agitate developing unit during replenishing
- *3: Agitate developing unit after replenishing

6.3.6 Toner spillage prevention shutter

(1) Toner cartridge

(a) Mounting

- The shutter of the toner replenishing port is opened when the handle of the toner cartridge is rotated clockwise to the toner replenishing position after the toner cartridge has been inserted into the toner cartridge mounting portion.

(b) Removal

- Rotating the handle of the toner cartridge counterclockwise to the cartridge removal position closes the shutter of the toner replenishing port. The toner cartridge can be removed when the toner replenishing port of the toner cartridge is closed.

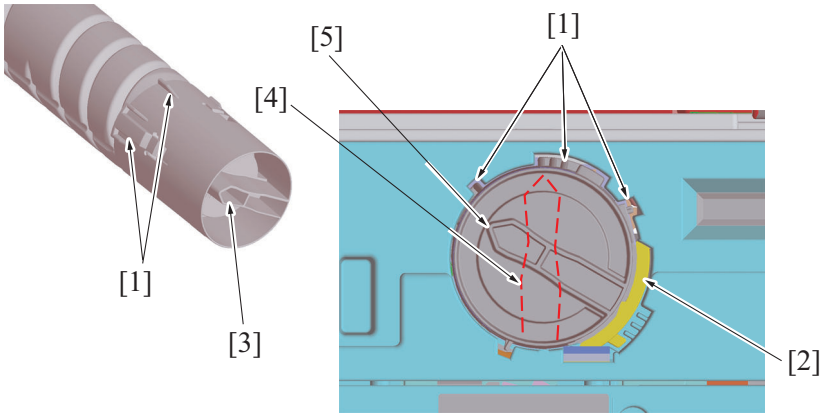

[1]	Toner cartridge positioning protrusion	[2]	Toner cartridge toner spillage prevention shutter
[3]	Toner cartridge handle	[4]	Toner replenishment position
[5]	Toner cartridge removal position	-	-

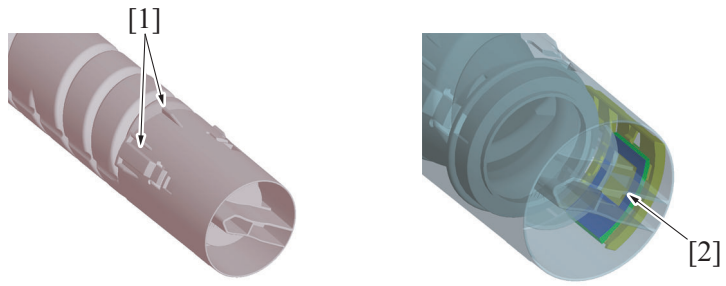

[1]	Toner cartridge positioning protrusion	[2]	Toner cartridge toner replenishing port (toner cartridge removal position)

(2) Toner hopper

- The toner replenishing port of the toner hopper of each color of toner is provided with a toner spillage prevention shutter that prevents toner from spilling during removal or reinstallation of the developing unit.
- Mounting the developing unit pushes the shutter at the toner replenishing port, opening the toner replenishing port. Removing the developing unit, on the other hand, closes the shutter and toner is thereby prevented from spilling from the toner replenishing port.

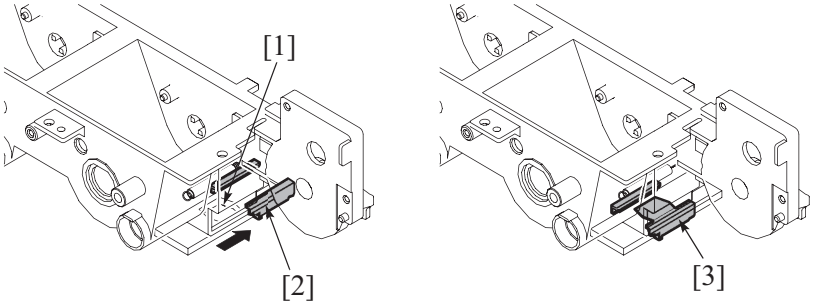

[1]	Toner replenishing port	[2]	Toner hopper toner spillage prevention shutter (open: toner replenishing position)
[3]	Toner hopper toner spillage prevention shutter (closed: developing unit removal position)	-	-

6.3.7 Front door mechanism

- The main power switch and total counter are mounted inside the front door.

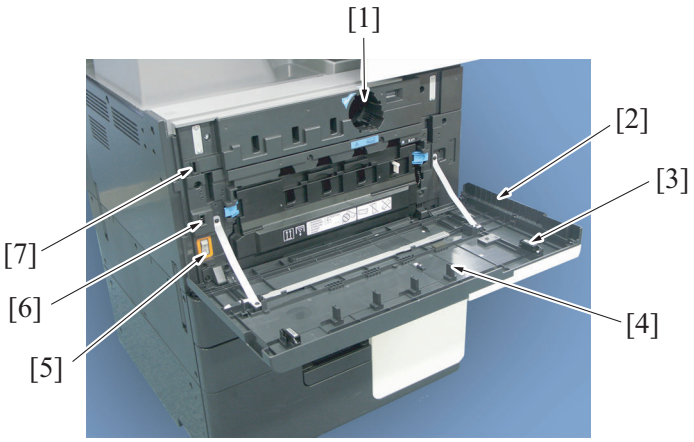

[1]	Toner cartridge mounting position	[2]	Front door
[3]	Door lock magnet	[4]	Toner cartridge positioning protrusion
[5]	Main power switch	[6]	Front door switch
[7]	Front door sensor	-	-

(1) Front door locking mechanism

- The front door is provided with a locking mechanism.

(a) Unlocking the front door

- Pulling the front door to the front will release the door lock magnets (two) provided at the upper portion of the front door.

(b) Locking the front door

- Close the front door. When the front door is closed in its correct position, the door lock magnets (two) provided at the upper portion of the front door lock the front door in place.
- The front door is provided with a protrusion for detecting mounting of the toner bottle. It functions to detect the mounting condition of the toner bottle, preventing the machine from being operated with the toner bottle unmounted".

(2) Front door open/close detection mechanism

- The front door switch detects that the front door is opened or closed.
- When the front door is closed, the open/close detection protrusion provided at the upper portion on the left side of the front door presses the actuator of the front door switch. This turns ON the front door switch and the machine determines that the front door is closed.
- When the front door is opened, the front door switch actuator is released, which turns OFF the front door switch. The machine then determines that the front door is open and shows a message that prompts the operator to close the front door.
- When it is determined that the front door is open, use of all jobs but the fax reception job is prohibited. In addition, a paper misfeed results if the front door is opened during a print job.

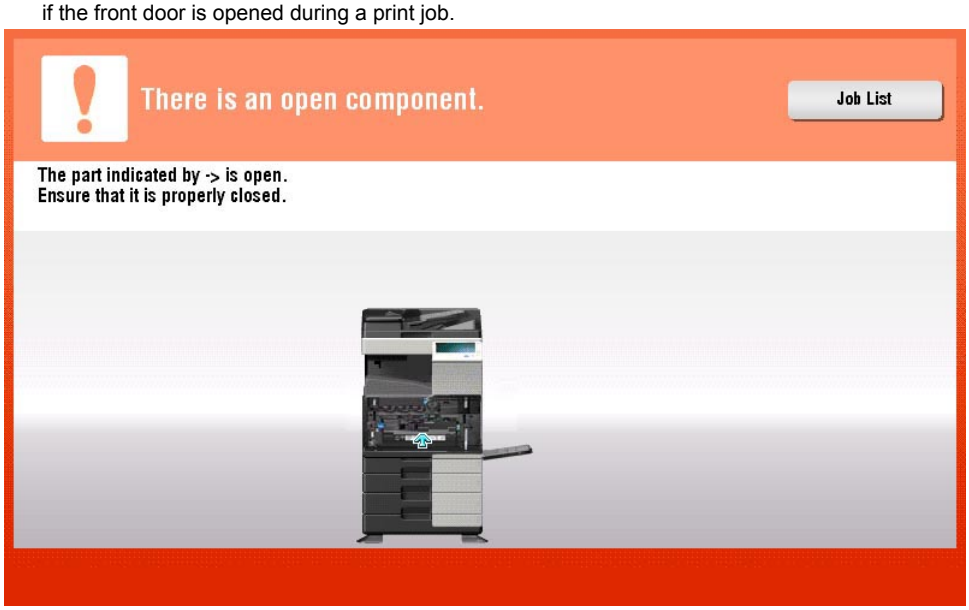

6.3.8 Life control

(1) Toner near empty detection

- The toner empty sensor provided for the toner hopper of toner is used to determine the amount of toner still available for use in the toner hopper.
- The actuator of the toner empty sensor is moved up and down by the cam mounted coaxially with the toner agitating blade. A detection plate is fixed to the actuator. The toner empty sensor detects the vertical movement of the detection plate.
- If the near empty counter is incremented by 4 or more during control of replenishing the toner hopper with toner, the machine determines that the toner hopper is in a toner near empty condition and enters the toner empty control.

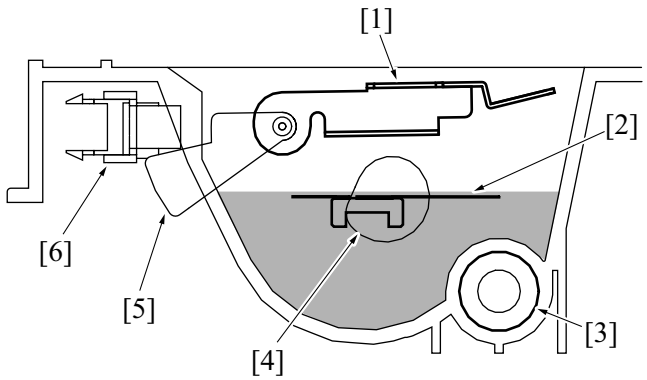

[1]	Detection plate	[2]	Toner agitating blade
[3]	Toner conveying screw	[4]	Cam (operatively connected to toner agitating blade shaft)
[5]	Actuator	[6]	Toner empty sensor

(a) Toner near empty detection timing

- The toner replenishing control is started when the drive of the toner supply motor is started.

- The output of the toner empty sensor is monitored for a predetermined period of time. If the toner empty sensor is turned ON from the OFF state, during the predetermined period of time, the machinedetermines that the “toner hopper runs out of toner (or there is only a small amount of toner left in the toner hopper)” and increments the near empty counter by one.
- If the toner empty sensor remains OFF, the machine determines that “toner is still available for use in the toner hopper”, resetting the near empty counter to zero.
- If the near empty counter is incremented by 3 through the foregoing operations repeatedly performed, the machine determines that the toner hopper is in a toner near empty condition and gives the message “Toner is low. Replace when indicated” on the control panel.

(b) Toner near-empty display

- The warning screen to be displayed when a toner near-empty is detected can be enabled or disabled in the “System 2/ Unit Change” in the Service Mode.
- When the warning screen display is set to “Yes”, the message notifying the user that the toner cartridge needs replacing soon is displayed. (Toner is low. Replace when indicated)
  Printing can be continued even after the message appears.
- When the warning screen display is set to No, the message notifying the user that the toner cartridge needs replacing soon is not displayed. Printing can be continued without having the message displayed.

(2) Toner empty detection

- The machine determines a toner empty condition by using the toner empty sensor provided for the toner hopper of toner, the toner supply motor at the toner hopper, and the TCR sensor provided for the developing unit of toner.

(a) Toner empty detection timing

- The machine determines a toner empty condition when any of the following conditions is detected after a toner near empty condition has been detected. It then gives the message “Toner has been depleted. (snip)” on the control panel.
  1. The rotation time of the toner supply motor (amount of toner replenished) exceeds the predetermined value.
     Note, however, that the cumulative rotation time of the toner supply motor is reset to zero, if the event that “the toner hopper runs out of toner (or there is only a small amount of toner left in the toner hopper)” is not detected by the toner empty sensor within a predetermined period of time after the toner near empty condition has been detected.
  2. The TCR sensor detects a T/C ratio that is lower than a predetermined value.

(b) Toner empty display

- The screen mode to be displayed when a toner empty is detected can be selected by specifying the person who replaces the unit in the “System 2/ Unit Change” in the Service Mode.
- When User is selected as the person, the message requesting toner cartridge replacement by user is displayed when a toner empty condition is detected. (Toner has been depleted. Replace the toner cartridge.)
- When Service is selected as the person, the message prompting service engineer to replace the toner cartridge is displayed. (Out of toner. Contact your service representative.)

(3) Resetting the toner near empty and toner empty conditions

- Either the “auxiliary toner replenishing control for toner hopper” or “auxiliary toner replenishing control for developing unit” is performed (both may be performed in some cases) after a toner near empty condition and a toner empty condition have been detected.
- The toner near empty/empty display is reset when the control is normally terminated.
- Initiation of a new print cycle is prohibited during execution of the “auxiliary toner replenishing control for toner hopper” and “auxiliary toner replenishing control for developing unit”.
- See the relevant pages for more details of the “O.6.3.4 Auxiliary toner replenishing control for toner hopper” and “O.6.3.5 Auxiliary toner replenishing control for developing unit”.

List of controls

Control name	Parts to be controlled	Description
Auxiliary toner replenishing control for developing unit	Developing unit	Recovers the T/C ratio of the developer in the developing unit.
Auxiliary toner replenishing control for toner hopper	Toner hopper	Recovers the amount of toner in the toner hopper.

Condition	Toner in unit		Control to be executed	Printing after the end of the control
	Developing unit	Toner hopper		
Near empty	Available	Decreasing	Auxiliary toner replenishing control for toner hopper	Near empty display is reset if the amount of toner in the toner hopper is recovered.
Empty 1	Available	Not available		Empty display stays put if the amount of toner in the toner hopper is not recovered.
Empty 2	Not available	Not available	Auxiliary toner replenishing control for toner hopper + auxiliary toner replenishing control for developing unit	Near empty display is reset if the T/C ratio is recovered.
				Empty display stays put if the T/C ratio is not recovered.

(a) Toner empty condition resetting timing

- The “auxiliary toner replenishing control for toner hopper” or “auxiliary toner replenishing control for developing unit” is executed under any of the following conditions after a toner near empty/toner empty condition has been detected:
  “The main power switch is turned ON”
  “Release in sub power off mode”
  “The front door or the like is opened and closed”

(b) Precaution when replacing toner cartridge

- The toner cartridge is not provided with any mechanism that detects the amount of toner still available for use in the cartridge. Therefore, make sure that the toner near empty or toner empty message is displayed before replacing the new toner cartridge. Do not replace with the new toner cartridge until the toner near empty or toner empty message is displayed.
- The toner amount data (level gauge) of the control panel determines that “Toner cartridge is replaced with new one” after toner empty status changes to the normal status, and the “Toner amount data” is reset to zero.
  Therefore, in cases where the toner cartridge is replaced with a new one before the toner near empty or toner empty message is displayed, the “Toner amount data” fails to be cleared, which creates the conflicting indicators of “Toner amount data displayed” on the control panel and the “Toner current level” in the toner cartridge.
- The toner amount data displayed on the control panel may not agree with the actual amount of toner left in the toner cartridge.

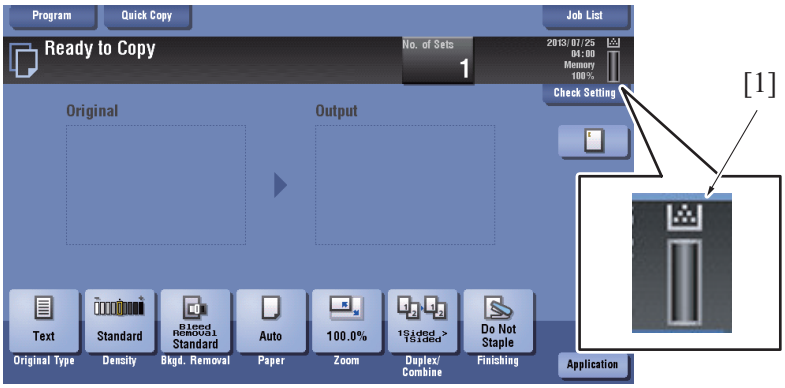

[1]	Toner amount data (level gauge)	-	-

7. 1ST TRANSFER SECTION

7.1 Configuration

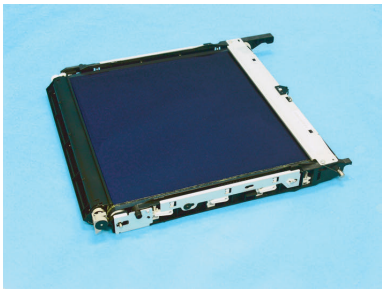

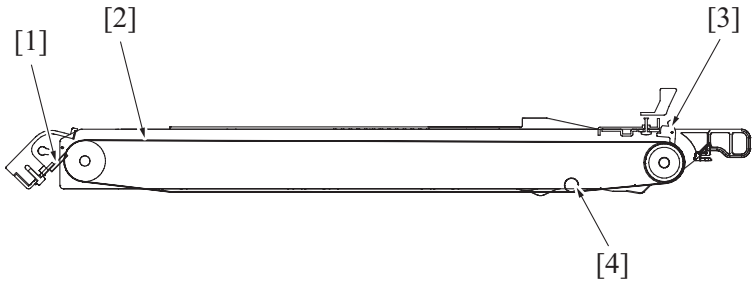

[1]	Cleaning blade	[2]	Transfer belt
[3]	Separation claw	[4]	1st transfer roller

7.2 Drive

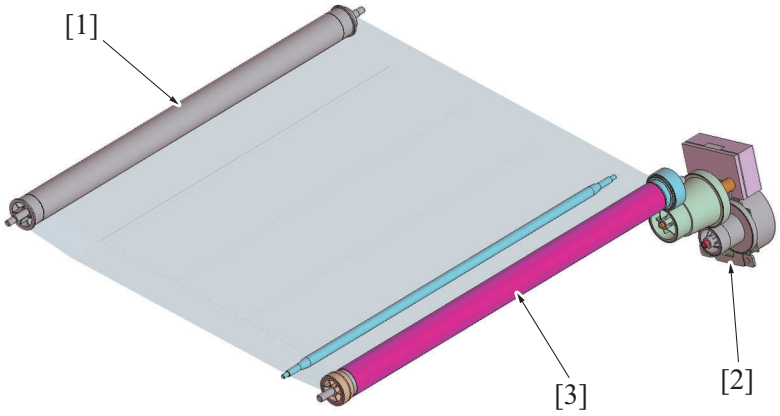

[1]	Transfer belt driven roller	[2]	Transport motor (M1)
[3]	Transfer belt drive roller	-	-

7.3 Operation

7.3.1 Transfer belt drive

- The transfer belt drive roller is rotated by the driving force of the transport motor.
- Rotation of the transfer belt causes the transfer belt driven roller to rotate. The drive transmission gear located at the transfer belt driven roller rotates the waste toner conveying screw of the cleaning mechanism.

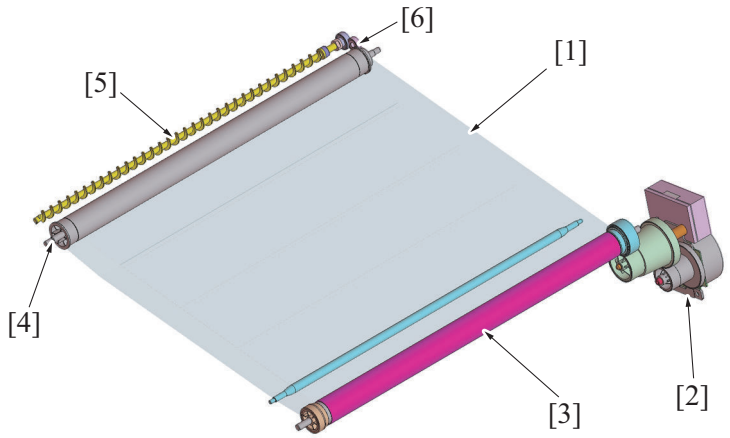

[1]	Transfer belt	[2]	Transport motor (M1)
[3]	Transfer belt drive roller	[4]	Transfer belt driven roller
[5]	Waste toner conveying screw	[6]	Drive transmission gear

7.3.2 1st transfer roller control

- The 1st transfer roller always presses the transfer belt to the PC drum.

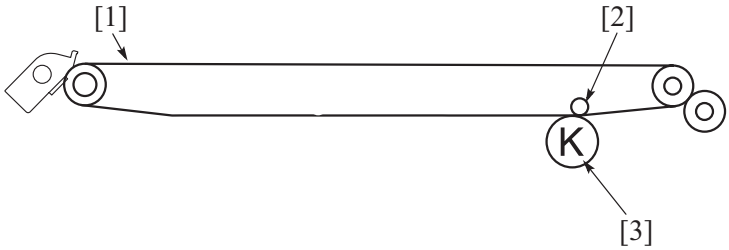

[1]	Transfer belt	[2]	1st transfer roller
[3]	PC drum	-	-

7.3.3 1st transfer control

- To transfer the toner image formed on the surface of the PC drum onto the transfer belt, the transfer current supplied from the high voltage unit is applied to the 1st transfer roller.

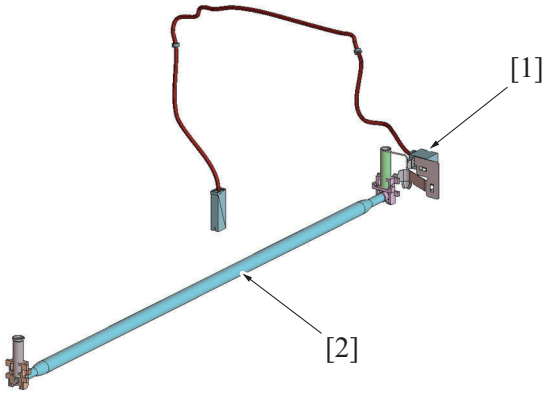

[1]	1st transfer current application terminal	[2]	1st transfer roller

7.3.4 Transfer belt cleaning

- The toner image on the surface of the transfer belt is transferred onto the paper (2nd transfer).
- Part of the toner image is left on the surface of the transfer belt after the 2nd transfer. A cleaning blade is provided on the transfer belt. It functions to remove the residual toner (waste toner).

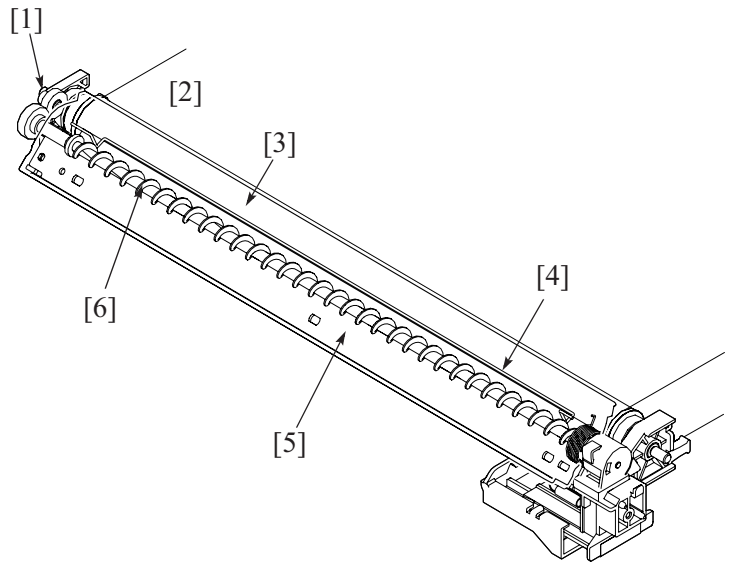

[1]	Drive transmission gear	[2]	Transfer belt
[3]	Transfer belt driven roller	[4]	Caking-of-toner prevention blade
[5]	Cleaning blade	[6]	Toner collecting screw

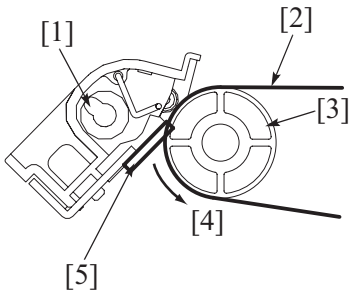

[1]	Toner collecting screw	[2]	Transfer belt
[3]	Transfer belt driven roller	[4]	Transfer belt rotative direction (forward rotation)
[5]	Cleaning blade	-	-

(1) Cleaning blade

- The cleaning blade, of a fixed blade type, is pressed up against the surface of the transfer belt at all times. No cleaning blade retraction mechanism is provided.
- The waste toner on the surface of the transfer belt is scraped off as the transfer belt is rotated.

(2) Waste toner conveying/collecting mechanism

- Drive for the toner collecting screw comes from the transfer belt driven roller. (The toner collecting screw rotates in time with rotation of the transfer belt.)
- The rotation of the toner collecting screw conveys waste toner scraped off the surface of the transfer belt toward the front of the machine.
- There is a caking-of-toner prevention blade installed. It prevents waste toner from caking at the toner collecting screw portion.
- The waste toner is discharged through the toner collecting port into the waste toner box.
- The waste toner is disposed of when a waste toner box which is detected to be full of waste toner is replaced with a new one and the used waste toner box is discarded.

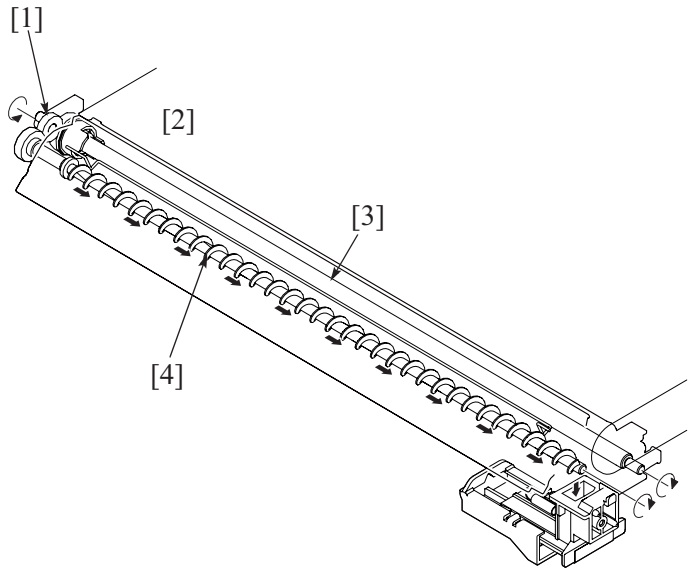

[1]	Drive engaged gear	[2]	Transfer belt
[3]	Transfer belt driven roller	[4]	Toner collecting screw

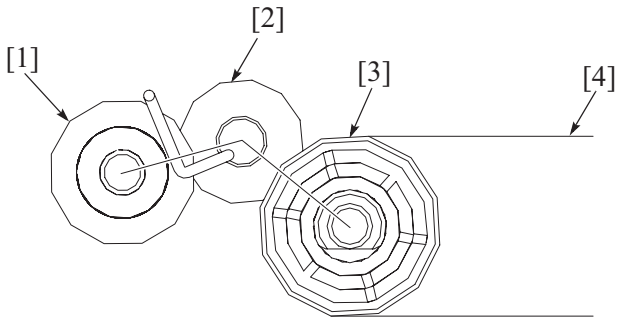

[1]	Toner collecting screw	[2]	Drive engaged gear
[3]	Transfer belt driven roller	[4]	Transfer belt

7.3.5 Waste toner spillage prevention shutter

- The toner collecting port is provided with a waste toner spillage prevention shutter that prevents waste toner from spilling during removal or reinstallation of the waste toner box.
- Mounting the waste toner box in place pushes the shutter at the toner collecting port, thus opening the toner collecting port. The shutter is closed by the waste toner box removal and prevents the toner overspill from the toner collecting port.

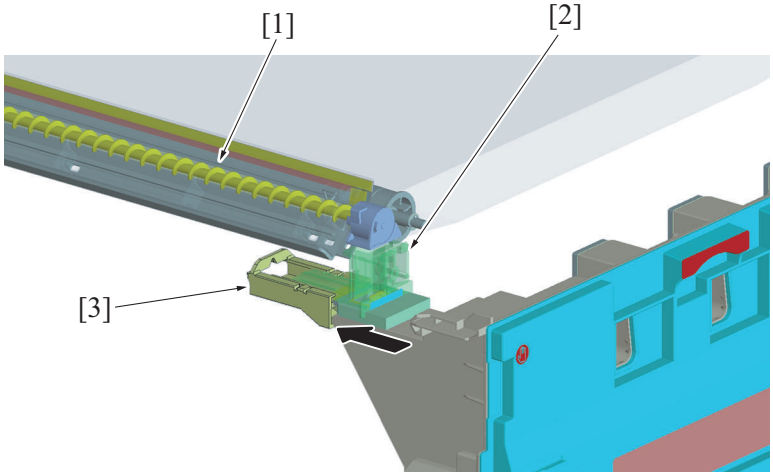

[1]	Toner collecting screw	[2]	Toner collecting port

[3]	Shutter	-	-

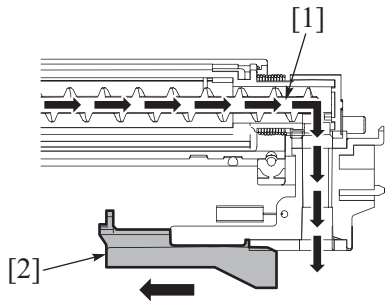

[1]	Toner collecting screw	[2]	Shutter (open)

7.3.6 Transfer belt cooling

- The transfer belt cleaner cooling fan is provided to circulate air through the inside of the machine, so that the areas around the developing unit, drum unit, toner hopper, and the transfer belt unit can be cooled.

(1) Air flow path

- Air around the developing unit and drum unit is drawn in.
- The air drawn in flows between the toner bottle and the transfer belt unit and is blown against the toner bottle.

(2) Transfer belt cleaner cooling fan rotation start timing

- The transfer belt cleaner cooling fan rotates at full speed under any of the following conditions:
  “During a print cycle”
  “During predrive after the power is turned ON”
  “During execution of image stabilization control”

(3) Transfer belt cleaner cooling fan rotation stop timing

- The transfer belt cleaner cooling fan stops rotating under any of the following conditions:
  “Upon completion of a print cycle”
  “Upon completion of predrive performed when the power is turned ON”
  “Upon completion of image stabilization control”

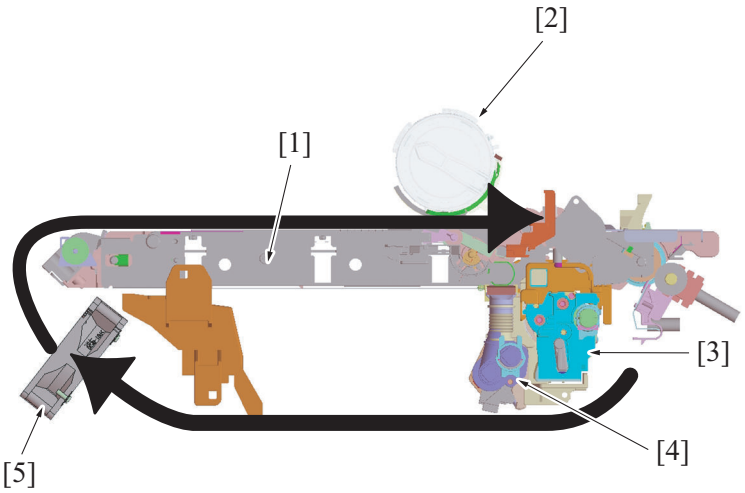

[1]	Transfer belt unit	[2]	Toner cartridge
[3]	Drum unit	[4]	Developing unit
[5]	Transfer belt cleaner cooling fan (FM2)	-	-

7.3.7 Cleaning blade foreign matter removal control

- The transfer belt is rotated backward to a small extent and then rotated forward to remove foreign matter (dust, toner, etc.) wedged between the transfer belt and the edge of the cleaning blade.

(1) Operation timing

- The backward rotation control is provided at the completion of every print job.

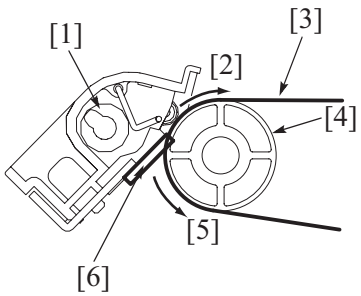

[1]	Toner collecting screw	[2]	Backward rotation
[3]	Transfer belt	[4]	Transfer belt driven roller
[5]	Forward rotation	[6]	Cleaning blade

7.3.8 Transfer belt new article detection

- The transfer belt unit is not provided with any new article detection mechanism. If the transfer belt is replaced with a new one, therefore, “New Release” must be performed in “Counter/ Life” of the Service Mode. For detailed operating procedures, see “I.11.16.2 Life”.

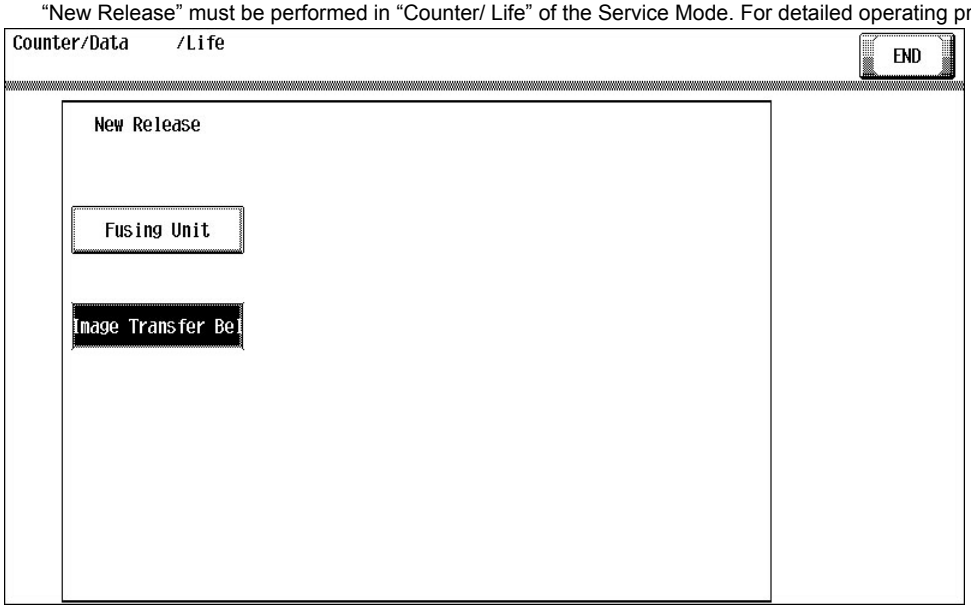

7.3.9 Transfer belt life detection

NOTE

- **On this machine, since the life stop and the life warning display are specified to [Off] by default, a warning display does not appear and the print job does not stop even when the life is reached.**
  To confirm the life of each unit, check the counter data and configure the following settings. [Service Mode] -> [Counter/Data] -> [Life]
- **Life related display default setting**
  Life Display (Near Life Display Settings): Display
  Life Cycle Display Warning: Off
  Life Stop: Off

(1) Counter life determination

- Each of the printed counter and the transfer belt rotation time counter has its own threshold value to determine its own life. If the printed counter or transfer belt rotate time counter reaches the threshold, the machine determines that the transfer belt unit has reached a new state.

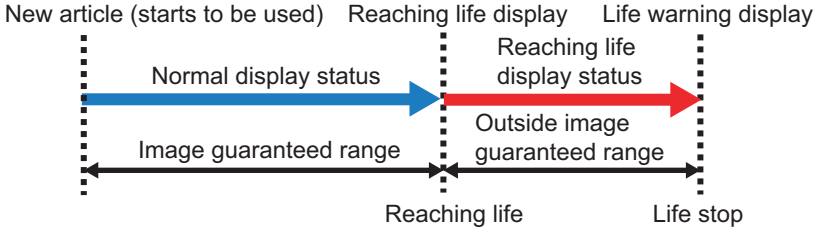

(2) Life determination timing

- The life determination control is performed under any of the following conditions:
  "The power switch is turned ON (with the front door and right door are closed)"
  "The machine exits the sleep mode"
  "The front door or right door is opened and closed with the power switch in ON position"
  ""New Release" of "Transfer Belt Unit" is performed in life counter of the service mode"
  "The counter is updated (during rotation of transfer belt)"

(3) Life display (Display and settings for unit to be replaced)

(a) Reaching life display

- The life reaching screen appears when the count of the printed counter or the transfer belt rotation time counter reaches the reaching life threshold (print enabled, outside image guaranteed range).

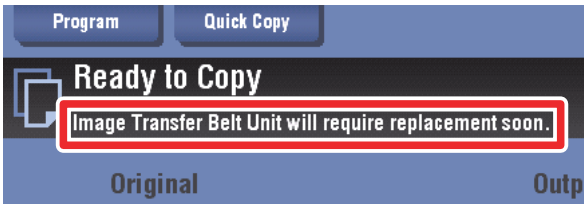

NOTICE
- Life_display_example(DrumUnit).pdf

(b) Reaching life display settings

- On this machine, since the reaching life display is specified to [Display] by default, a display appears when the life is reached.
  If necessary, configure the reaching life display settings.[Service Mode] -> [System 2] -> [Unit change] -> [Near Life Display Settings]

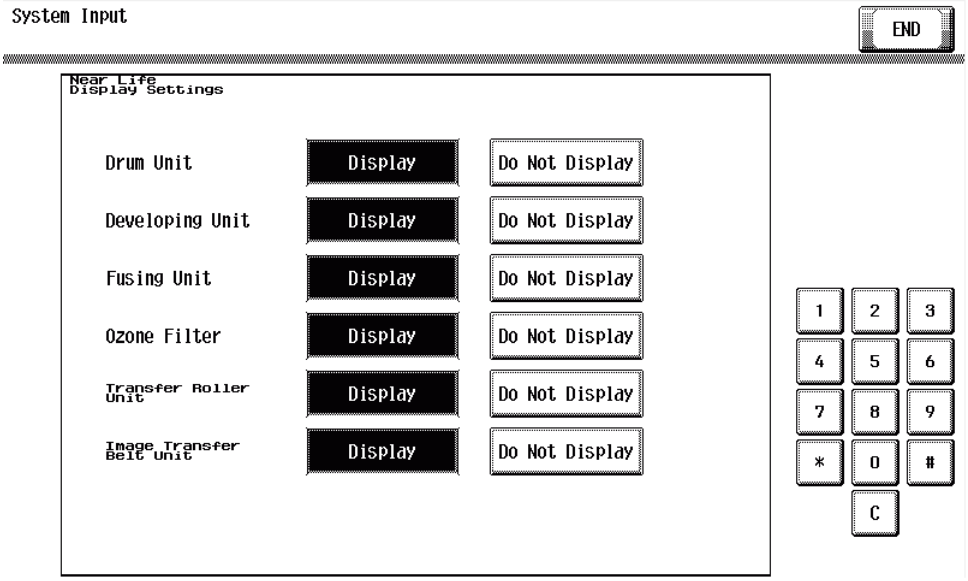

(c) Life cycle display warning

- The life stop screen appears when the count of the printed counter or the transfer belt rotation time counter reaches the life stop threshold (print prohibited).

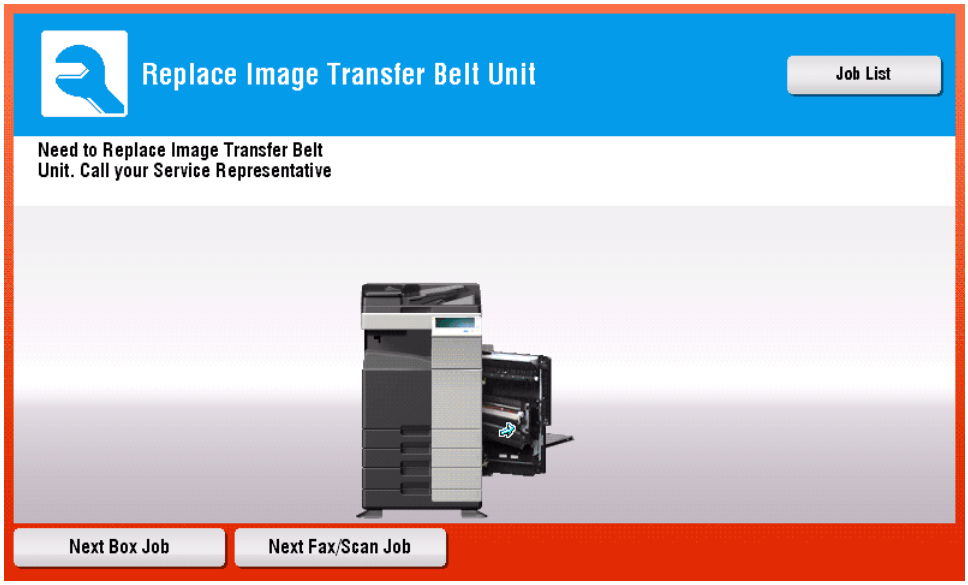

(d) Life cycle display warning and Life stop settings

- On this machine, since the life cycle display warning and the life stop are specified to [Off] by default, a warning display does not appear and the print job does not stop even when the life is reached.
- If necessary, configure the life stop settings. [Service Mode] -> [Enhanced Security] -> [Life Stop Setting]

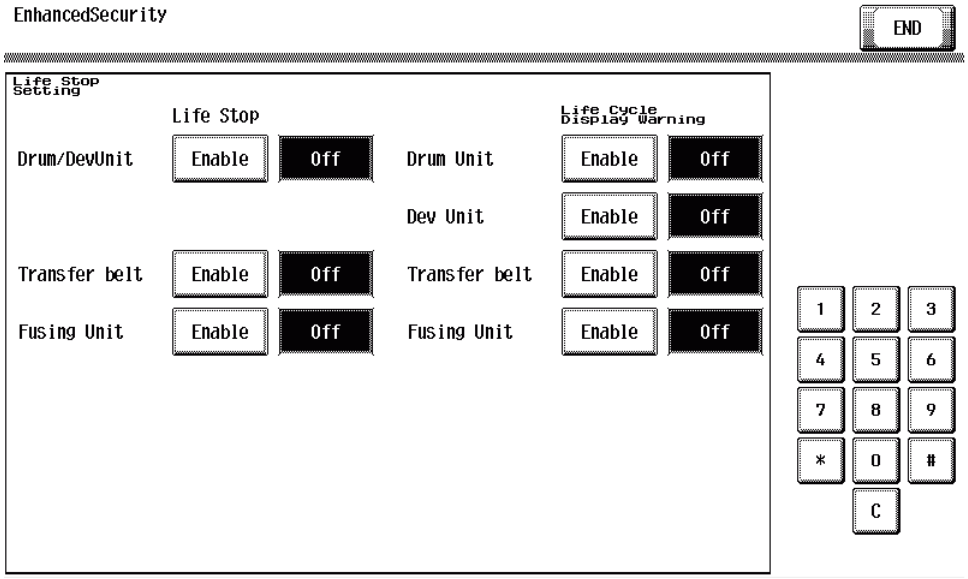

8. 2ND TRANSFER SECTION

8.1 Configuration

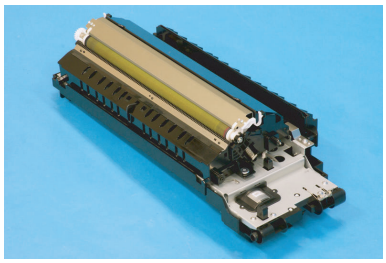

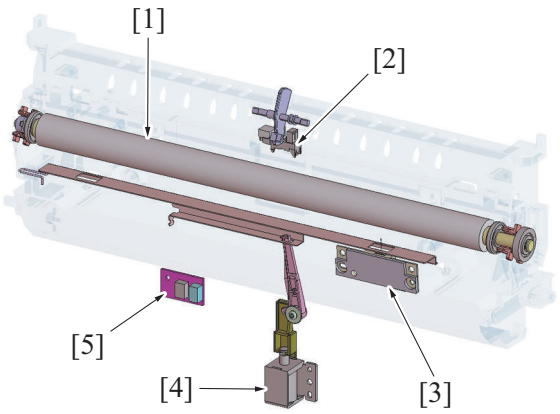

[1]	2nd transfer roller	[2]	Fusing loop sensor (PS2)
[3]	IDC sensor/Fr (IDCS/Fr)	[4]	IDC sensor shutter solenoid (SD2)
[5]	Temperature/humidity sensor (TEM/HUMS)	-	-

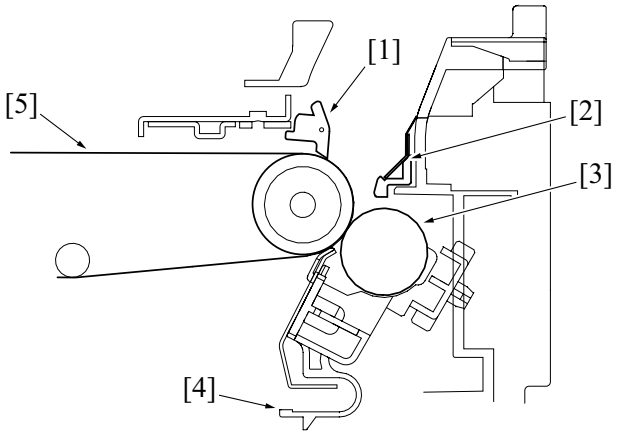

[1]	Separation claw	[2]	Charge neutralizing needle
[3]	2nd transfer roller	[4]	2nd transfer roller lock release lever
[5]	Transfer belt	-	-

8.2 Drive

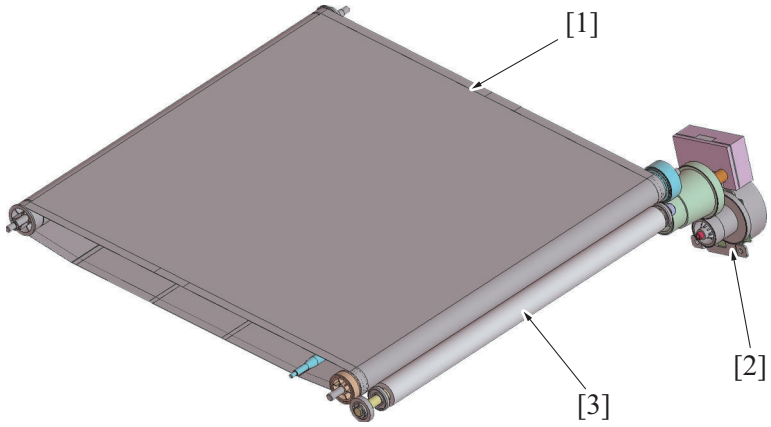

[1]	Transfer belt	[2]	Transport motor (M1)
[3]	2nd transfer roller	-	-

8.3 Operation

8.3.1 2nd transfer control

- To transfer the toner image formed on the transfer belt onto the paper, the 2nd transfer voltage supplied from the high voltage unit is applied to the 2nd transfer roller.
- Resistance of the 2nd transfer roller changes with an environmental change, durability, and other factors. To maintain an optimum output voltage, fixed current is passed through the 2nd transfer roller and the voltage being outputted at that time is detected. An appropriate 2nd transfer voltage is determined based on the measured voltage and other information such as “type of paper used”, “temperature and humidity”, and “1-sided/2-sided”.

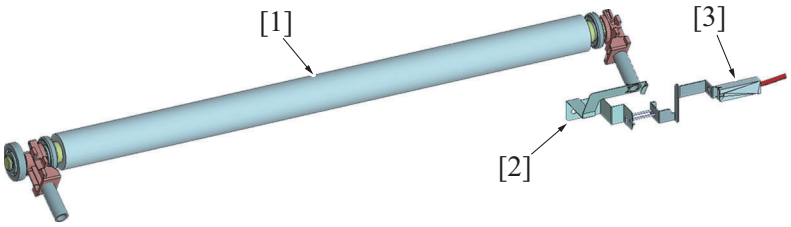

[1]	2nd transfer roller	[2]	2nd transfer voltage conductive plate
[3]	2nd transfer voltage application terminal	-	-

(1) Execution timing

- The 2nd transfer control is executed when a print job is received under any of the following conditions:
  “Main power switch is turned ON”
  “Power key is pushed”
  “The threshold value of a change in machine interior temperature is exceeded.”

(2) 2nd transfer control during image stabilization control

- In this machine, the 2nd transfer roller does not have a retraction mechanism, so that the transfer belt and 2nd transfer roller are pressed up against each other at all times.
- During image stabilization control, a toner image for adjustment purpose is formed on the surface of the transfer belt. A negative voltage is therefore applied to the 2nd transfer roller during image stabilization control. The amount of toner sticking to the 2nd transfer roller is thereby reduced.

8.3.2 Control of toner application to 2nd transfer roller

- In this machine, the 2nd transfer roller does not have a retraction mechanism, so that the transfer belt and 2nd transfer roller are pressed up against each other at all times.
- If a new 2nd transfer roller that has replaced an old one is left to stand idle for a long period of time, a substance contained in the new roller sticks to the surface of the transfer belt, which could result in noise in the print image.

- To prevent the substance contained in the 2nd transfer roller from sticking to the transfer belt, toner is applied to the surface of a new 2nd transfer roller at the time of replacement. (The toner image that corresponds to two complete revolutions of the transfer roller is formed on the surface of the transfer belt and is then transfer red onto the surface of the 2nd transfer roller.)

(1) Execution timing

- The control is executed when the life counter of the 2nd transfer roller in the service mode is reset to zero.

8.3.3 2nd transfer roller cleaning

- In order to remove the remaining toner on the 2nd transfer roller, -/+ (DC) charge is applied alternately to transfer the remaining toner on the 2nd transfer roller to the transfer belt. (The number of times that electrical charge is applied to the 2nd transfer roller is different depending on each situation.)
- The cleaning blade then scrapes off the toner on the surface of the transfer belt.

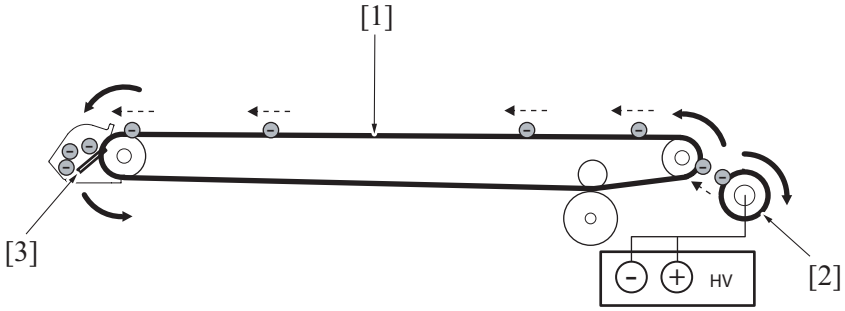

[1]	Transfer belt	[2]	2nd transfer roller
[3]	Cleaning blade	-	-

8.3.4 Charge neutralization and separation of paper

- To neutralize any residual potential on the paper which has undergone the 2nd transfer process, there is a charge neutralizing needle mounted on the guide plate after the 2nd transfer roller. There is a resin guide that prevents the electrode from directly contacting the paper.
- A negative bias is applied to the charge neutralizing needle, thereby neutralizing any residual potential on the paper.
- In order to separate the paper from the transfer belt without fail after the 2nd transfer, a separation claw is mounted (center one point.)

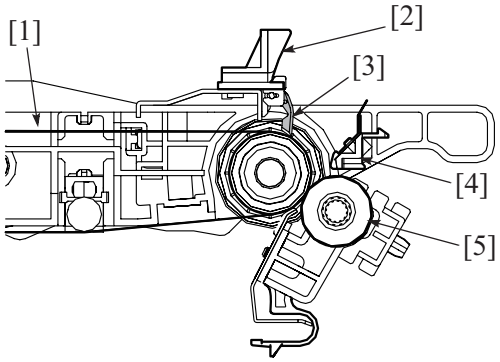

[1]	Transfer belt	[2]	Paper winding prevention guide
[3]	Separation claw	[4]	Charge neutralizing needle
[5]	2nd transfer roller	-	-

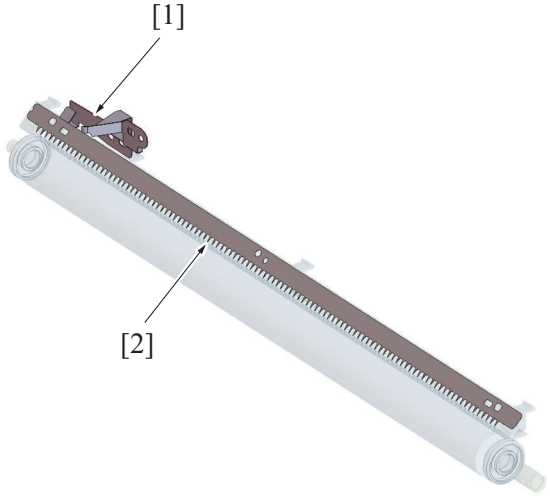

[1]	Charge neutralizing needle contact	[2]	Charge neutralizing needle

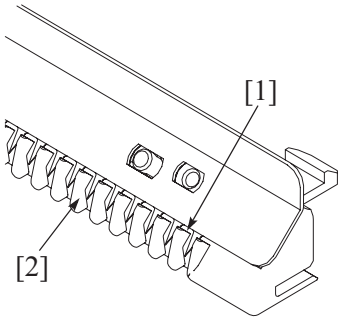

[1]	Charge neutralizing needle	[2]	Resin guide

8.3.5 Paper winding prevention guide

- The paper winding prevention guide prevents paper from being wound around the transfer belt again after its being separated from the transfer belt by the separation claw.

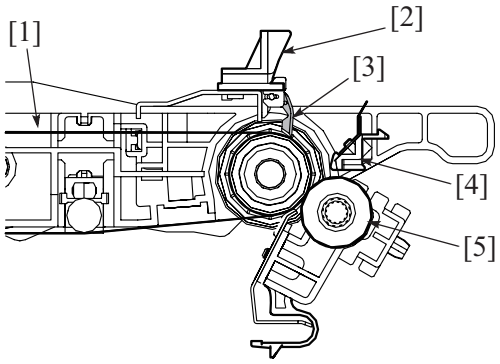

[1]	Transfer belt	[2]	Paper winding prevention guide
[3]	Separation claw	[4]	Charge neutralizing needle
[5]	2nd transfer roller	-	-

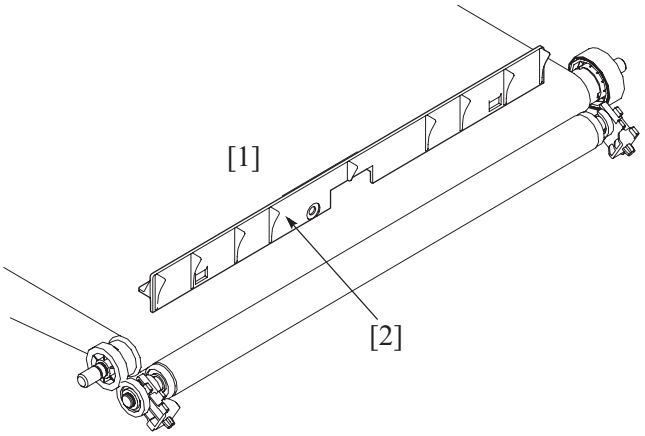

[1]	Transfer belt	[2]	Paper winding prevention guide

8.3.6 IDC sensor protection

- The IDC sensor can be contaminated with toner since it is located under the transfer belt. There is a shutter mechanism provided for the sensor to prevent it from being contaminated.
- The shutter is opened or closed by the IDC sensor shutter solenoid.

IDC sensor shutter solenoid (SD2)	Shutter
OFF	Closed
ON	Open

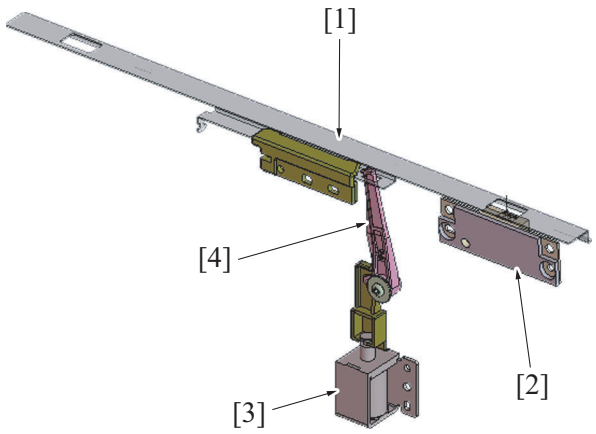

[1]	IDC sensor shutter (open position)	[2]	IDC sensor/Fr (IDCS/Fr)
[3]	IDC sensor shutter solenoid (SD2)	[4]	Actuator for shutter

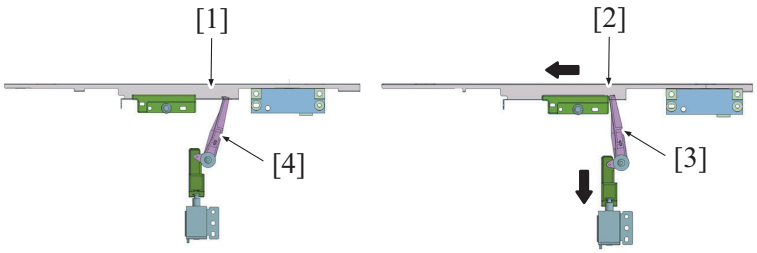

[1]	IDC sensor shutter (close position)	[2]	IDC sensor shutter solenoid: OFF
[3]	IDC sensor shutter (open position)	[4]	IDC sensor shutter solenoid: ON

8.3.7 2nd transfer roller new article detection

- The 2nd transfer roller (hereinafter referred to as the “transfer roller”) is not provided with any new article detection mechanism. If the transfer roller is replaced with a new one, therefore, “New Release” must be performed of the “Image Transfer Belt Unit” in “Counter/ Life” of the Service Mode. Performing “New Release” of the “Image Transfer Belt Unit” in life counter of the Service Mode will also reset the life counter of the transfer roller to zero.

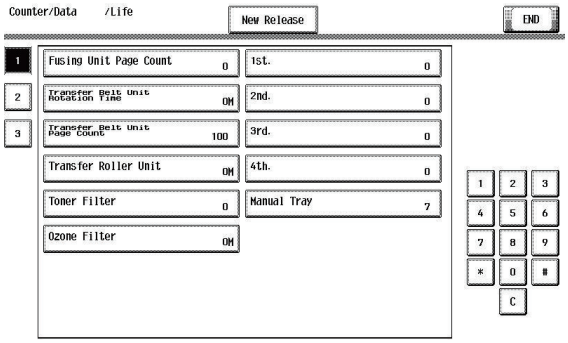

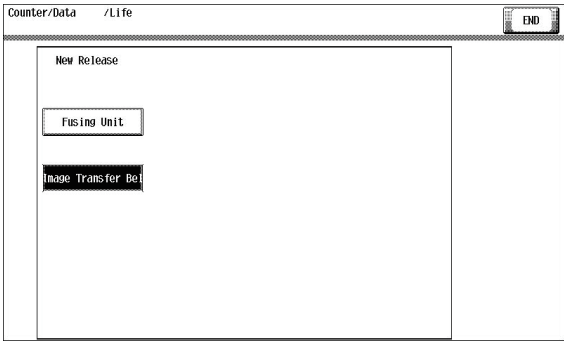

8.3.8 2nd transfer roller life detection

- The life counter of the transfer roller controls detection of life of the 2nd transfer roller (hereinafter referred to as the “transfer roller”).
- The counter value is recorded in the printer control board of the machine.

(1) Life determination

- If the count of the transfer roller counter reaches the threshold, the machine determines that the transfer roller has reached a new state.

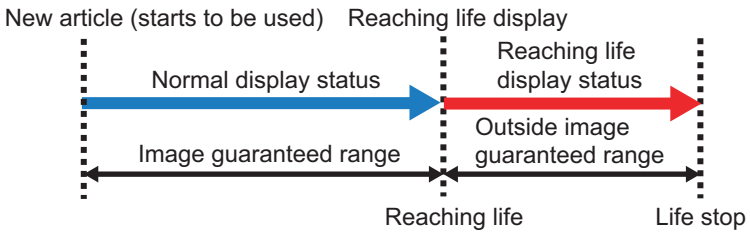

(2) Life display (Display and settings for unit to be replaced)

(a) Reaching life display

- The life reaching screen appears when the transfer roller counter reaches the reaching life threshold (print enabled, outside image guaranteed range)

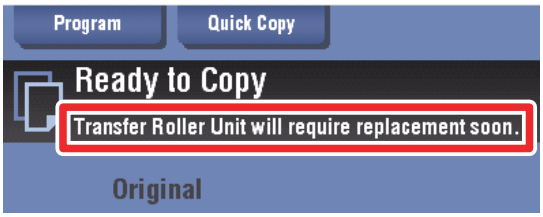

(b) Reaching life display settings

- On this machine, since the reaching life display is specified to [Display] by default, a display appears when the life is reached. If necessary, configure the reaching life display settings.[Service Mode] -> [System 2] -> [Unit change] -> [Near Life Display Settings]

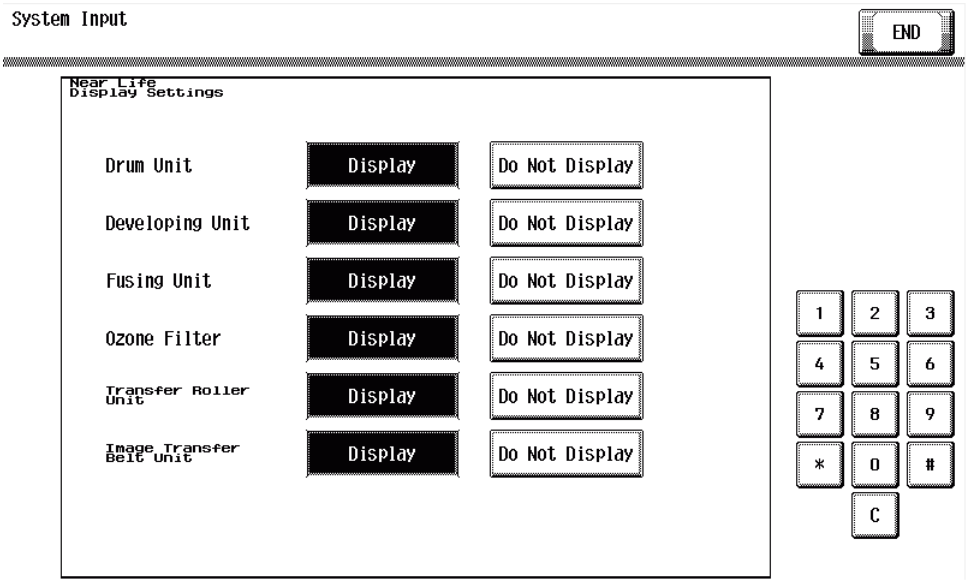

9. TONER COLLECTING SECTION

9.1 Configuration

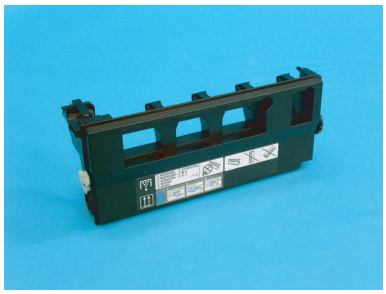

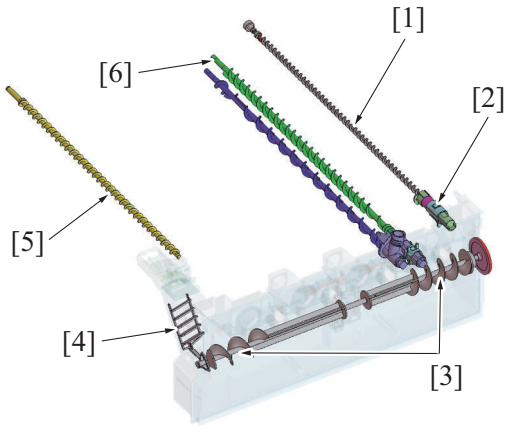

[1]	Toner collecting screw (Drum unit)	[2]	Toner collecting port (Drum unit)
[3]	Toner collecting screw (Waste toner box)	[4]	Transfer belt section
[5]	Toner collecting screw (Transfer belt section)	[6]	Toner supply screw (Developing unit)

9.2 Drive

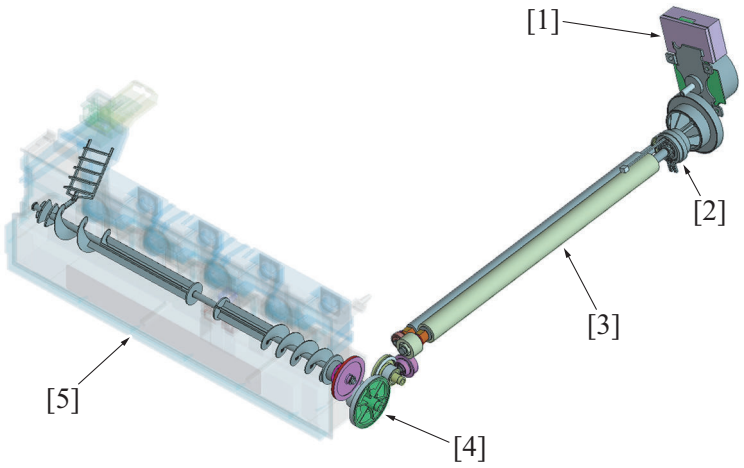

[1]	Transport motor (M1)	[2]	Registration clutch (CL4)
[3]	Registration roller	[4]	Waste toner box drive gear
[5]	Waste toner box	-	-

9.3 Operation

9.3.1 Waste toner box drive mechanism

- The waste toner box is driven by the transport motor.
- The driving force of the transport motor is transmitted to the registration roller via the registration clutch. The drive coupling gear mounted coaxially with the registration roller drives the waste toner box.

(1) Execution timing

- The waste toner box rotates in synchronism with the registration roller.

9.3.2 Control of waste toner conveyance through waste toner box

- Waste toner in the transfer belt unit and drum unit, and excess toner in the developing unit are conveyed onto the waste toner box by the toner collecting screw.
- Waste toner and waste developer (waste carrier + waste toner) are collected through the toner collecting ports for the each units.
- The waste toner collecting port is provided with a toner agitating blade that prevents toner from stagnating.
- The toner agitating blade is moved up and down as the toner collecting screw rotates.
  * The toner collecting port for the developing unit is not provided with any toner agitating blade.
- Toner collecting screw 1 and toner collecting screw 2 (dedicated to the transfer belt toner collecting port) are installed in the waste toner box.
- The screws provided on toner collecting screw 1 function to convey waste toner stagnant in the box uniformly onto the central portion of the box.
- Toner collecting screw 2 functions to convey toner conveyed from the transfer belt unit uniformly onto the central portion of the box.
- There is a detection window for detecting a waste toner full condition provided at the central portion of the box. When the waste toner conveyed onto the central portion of the box exceeds a predetermined height, waste toner spills over the waste toner full condition detection window. For details, see "O.9.3.4 Waste toner box full detection".

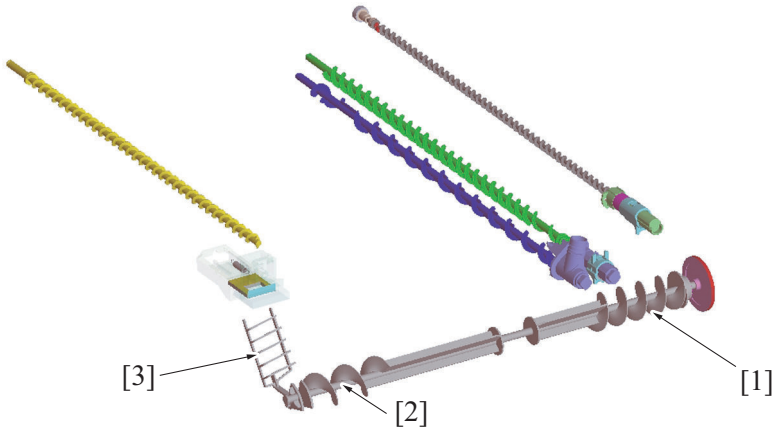

[1]	Toner collecting screw 1 (Waste toner box)	[2]	Toner collecting screw 2 (dedicated to the transfer belt toner collecting port)
[3]	Toner agitating blade	-	-

- Waste toner and waste developer (waste carrier + waste toner) are collected through the toner collecting ports for the unit.

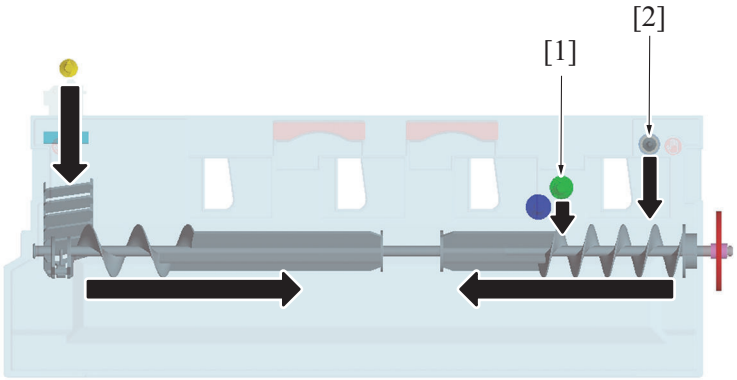

[1]	Toner collecting port (Developing unit)	[2]	Toner collecting port (Drum unit)

- The waste toner collecting port is provided with a toner agitating blade that prevents toner from stagnating.
- The toner agitating blade is moved up and down as the toner collecting screw rotates.

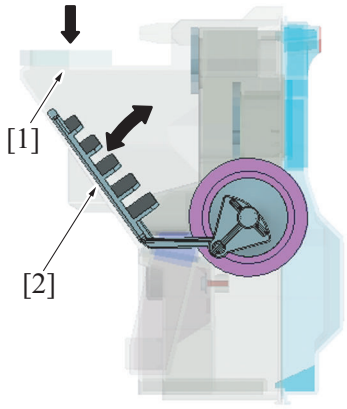

[1]	Toner collecting port (Transfer belt unit)	[2]	Toner agitating blade

- There is a detection window for detecting a waste toner full condition provided at the central portion of the box.
- When the waste toner conveyed onto the central portion of the box exceeds a predetermined height, waste toner spills over the waste toner full condition detection window.
  For details, seeQ.9.3.4 Waste toner box full detection.

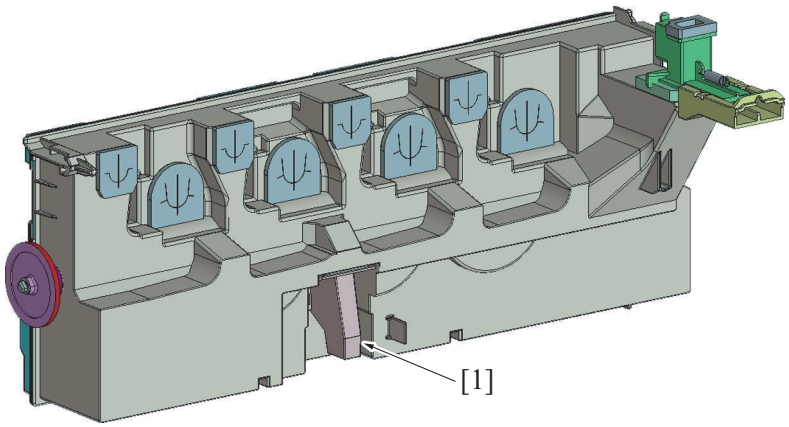

[1]	Waste toner full condition detection window	-	-

9.3.3 Waste toner box-in-position detection

- The waste toner box set sensor provided on the front side board detects mounting condition of the waste toner box. It prevents the machine from being operated with the waste toner box yet to be mounted in place.
- When the waste toner box is removed, the waste toner box set sensor is unblocked, which causes the machine to determine that the waste toner box is yet to be mounted.
- The machine, on determining that the waste toner box is yet to be mounted in place, prohibits initiation of a new print cycle.
- When the waste toner box is mounted, the waste toner box set sensor is blocked, which causes the machine to determine that the waste toner box is mounted in place.
- The machine, on determining that the waste toner box is mounted in place, resets the waste toner box yet-to-be-mounted display, enabling initiation of a new print cycle.

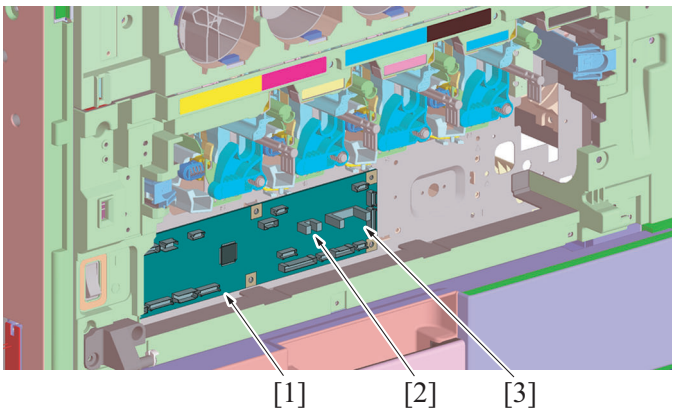

[1]	Front side board (FRB)	[2]	Waste toner box set sensor (PS100)
[3]	Waste toner full sensor (PS101)	-	-

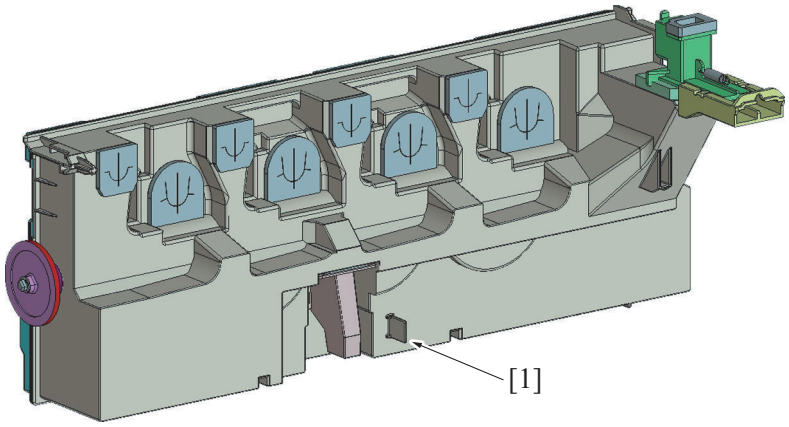

[1]	Waste toner full box detection plate	-	-

(1) Execution timing

- The waste toner box full detection control is performed under any of the following conditions:
  "The power switch is turned ON"
  "The front door or right door is closed"

(2) Waste toner box yet-to-be-mounted display

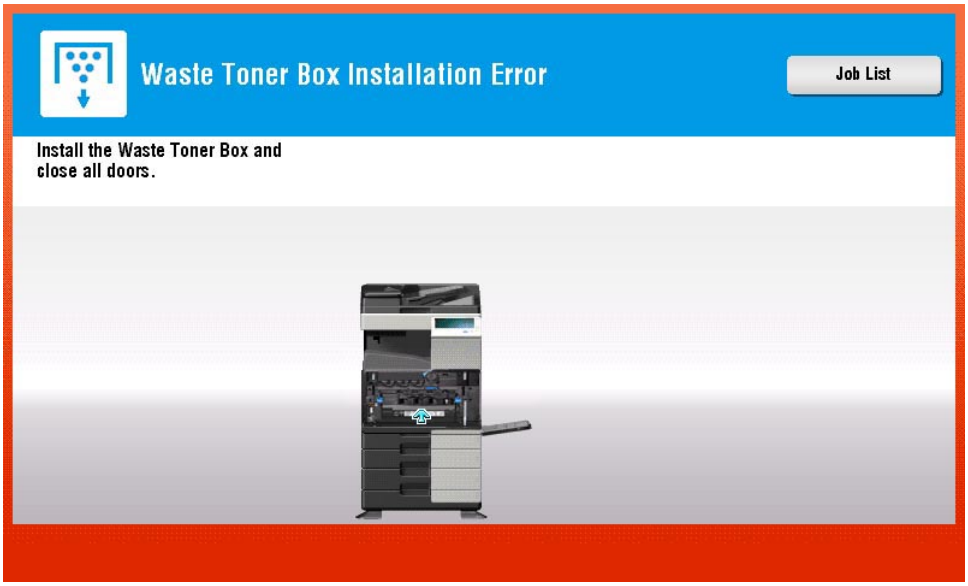

9.3.4 Waste toner box full detection

- The waste toner full sensor provided on the front side board is used to determine the amount of waste toner accumulated in the waste toner box.

(1) Waste toner near-full condition

- The toner collecting screw provided in the waste toner box conveys waste toner in the box onto the central portion of the box. For more details, see "O.9.3.2 Control of waste toner conveyance through waste toner box".
- There is the detection window for detecting a waste toner full condition provided at the central portion of the waste toner box. When the waste toner conveyed onto the central portion of the box exceeds a predetermined height, waste toner spills over the waste toner full condition detection section.
- The machine determines that there is a waste toner near-full condition, if the waste toner full sensor is blocked by the waste toner stagnant over the waste toner full condition detection section for a predetermined period of time or longer.

(a) Execution timing

- The waste toner box near-full detection control is performed under any of the following conditions:
  "The machine determines that the waste toner box is mounted in place using the waste toner box set sensor."
  "During a print cycle"
  "During execution of image stabilization control"

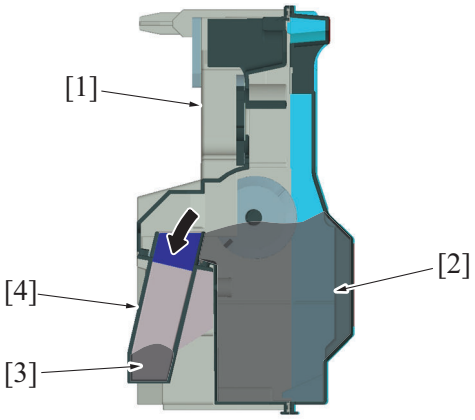

[1]	Waste toner box	[2]	Waste toner
[3]	Waste toner	[4]	Waste toner full condition detection window

(2) Waste toner full condition

- When a waste toner near-full condition is detected, the “waste toner full detection counter” is incremented according to the image density information of the print image during each of subsequent print jobs.
- When the waste toner full detection counter reaches a threshold value, the machine determines that there is a waste toner full condition.

(a) Execution timing

- The waste toner box full detection control is performed under any of the following conditions:
  “The machine determines that the waste toner box is mounted in place using the waste toner box set sensor.”
  “The waste toner full sensor detects a waste toner near-full condition.”
  “During a print cycle”
  “During execution of image stabilization control”

(3) Waste toner box life detection

Waste toner near-full	98,000 sheets
Waste toner full	110,000 sheets

NOTE

- **The number of printed pages represents a value calculated from the toner consumption recorded when the machine is used in the standard job mode. It varies depending on how the user uses the machine.**
- **For details, see “F.5.2 Details of the life specifications”.**

(4) Waste toner near-full and full displays

- The waste toner near-full display is given if the waste toner full sensor is blocked by the waste toner stagnant over the waste toner full condition detection section for a predetermined period of time or longer (though initiation of a new print cycle is enabled).
- When the waste toner full detection counter reaches the threshold value, the waste toner full display appears (and initiation of a new print cycle is prohibited).

NOTE

- **The contents of the waste toner near-full and waste toner full displays vary depending on the settings made in Consumable Life Reminder of the Service Mode.**

(a) Typical waste toner near-full display (typical)

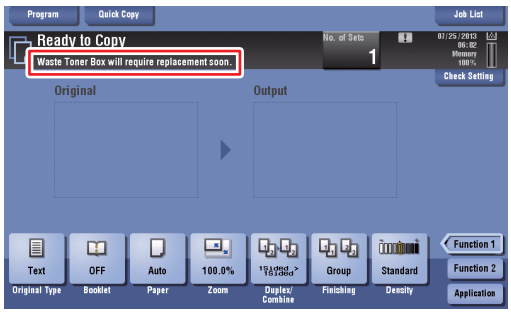

(b) Typical waste toner full display (typical)

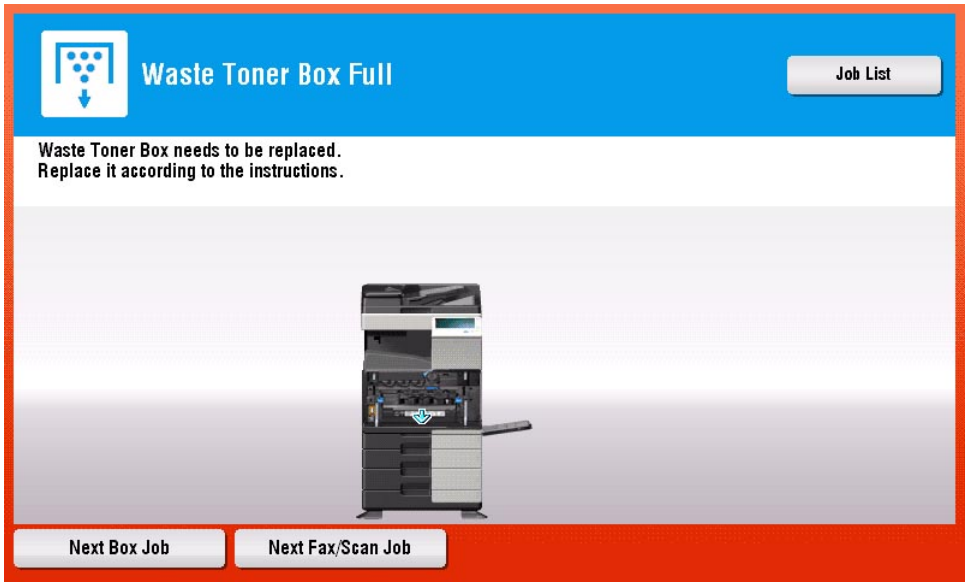

9.3.5 Waste toner box new article detection

- The waste toner box is not provided with any new article detection mechanism. Detection made by the waste toner full sensor is used for detecting a new waste toner box.
- When the waste toner full display appears, the existing waste toner box is replaced with a new one. When the waste toner full sensor remains unblocked for a predetermined period of time or more, the machine determines that the normal state is recovered (the old waste toner box is replaced with a new one).
- Determining that a new waste toner box has been mounted, the machine resets the waste toner full display, allowing the initiation of a new print cycle.

(1) Timing at which to reset the waste toner full display

- The waste toner box full detection control is performed under any of the following conditions:
  “The waste toner full sensor detects a waste toner full condition.”
  “The power switch is turned ON”
  “The front door is closed”

9.3.6 Waste toner spillage prevention shutter

- The toner collecting port for the transfer belt unit is provided with a waste toner spillage prevention shutter that prevents waste toner that is transported from the transfer belt from spilling during removal or reinstallation of the waste toner box.
- Inserting the waste toner box into its mounting position pushes the shutter at toner collecting port of the waste toner box, thus opening the toner collecting port.
- Removing the waste toner box allows the shutter spring to close the shutter at the toner collecting port.

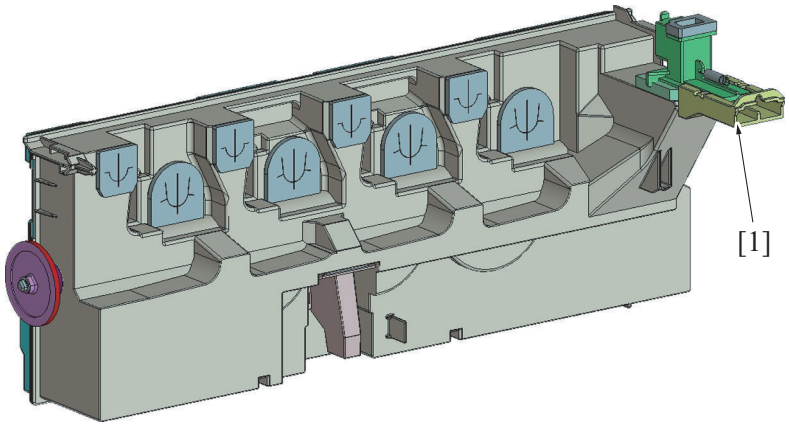

[1]	Toner collecting port	-	-

10. PAPER FEED SECTION (MANUAL BYPASS TRAY)

10.1 Configuration

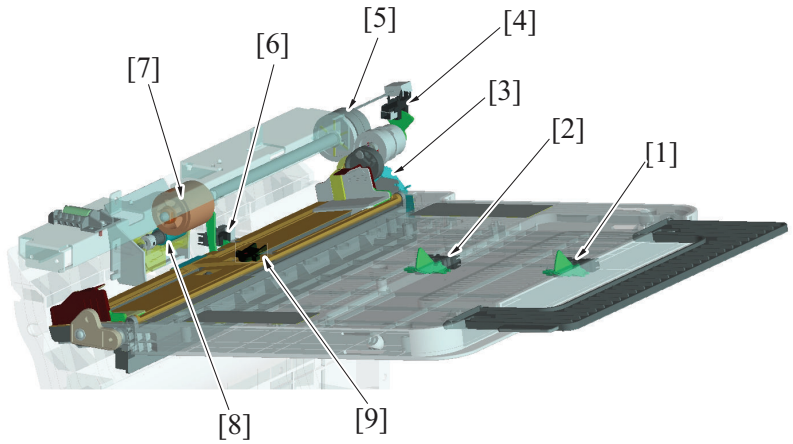

[1]	Bypass FD paper size sensor/2 (PS29)	[2]	Bypass FD paper size sensor/1 (PS28)
[3]	Bypass pick-up solenoid (SD1)	[4]	Bypass lift-up position sensor (PS26)
[5]	Bypass paper feed clutch (CL7)	[6]	Bypass paper empty sensor (PS27)
[7]	Manual bypass tray feed roller	[8]	Manual bypass tray separation roller
[9]	Bypass CD paper size VR (VR1)	-	-

10.2 Drive

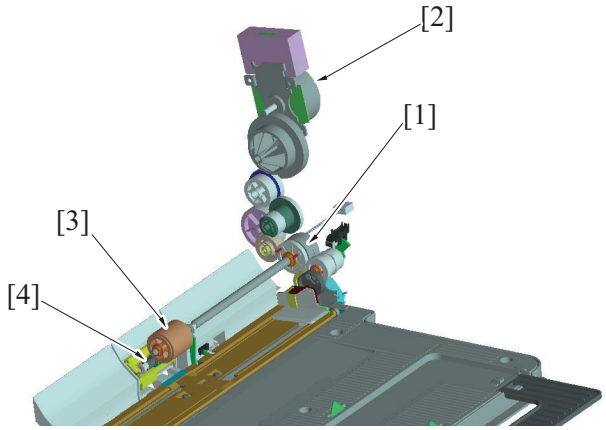

[1]	Bypass paper feed clutch (CL7)	[2]	Transport motor (M1)
[3]	Manual bypass tray feed roller	[4]	Manual bypass tray separation roller

10.3 Operation

10.3.1 Up/down control

- The paper lift-up plate is moved up and down by the transport motor.

(1) Up operation

- The bypass pick-up solenoid is energized for a predetermined period of time during rotation of the transport motor. This unlocks the paper lift-up plate clutch and the driving force of the transport motor is transmitted to the paper lift-up cam.
- As the paper lift-up cam rotates, the paper lift-up plate which has so far been pushed down by the paper lift-up cam is raised to the paper feed position by the spring.

(2) Down operation

- The bypass pick-up solenoid is energized for a predetermined period of time during rotation of the transport motor. This rotates the paper lift-up cam, so that the cam pushes the paper lift-up plate down into its standby position.

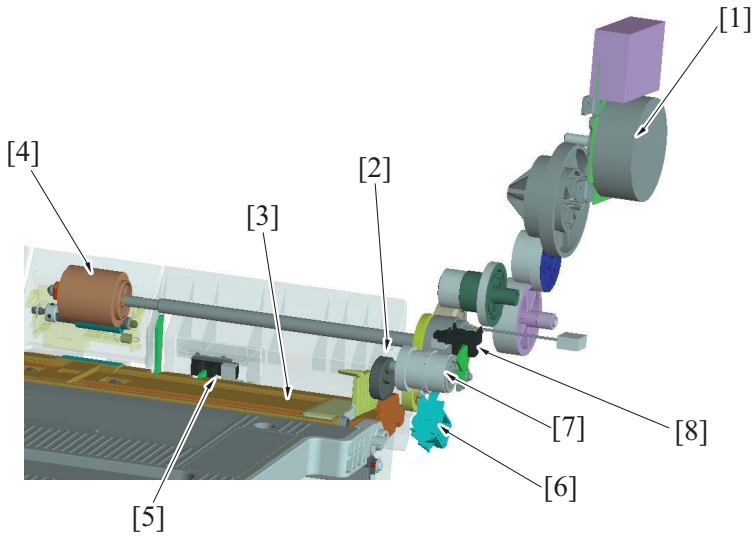

[1]	Transport motor (M1)	[2]	Paper lift-up cam
[3]	Paper lift-up plate	[4]	Manual bypass tray feed roller
[5]	Bypass paper empty sensor (PS27)	[6]	Bypass pick-up solenoid (SD1)
[7]	Paper lift-up plate clutch (mechanical)	[8]	Bypass lift-up position sensor (PS26)

(3) Operation timing

(a) Move to paper feed position (up)

- At the start of a manual bypass paper feed sequence, the paper lift-up plate is raised to the paper feed position.
- After the lapse of a predetermined period of time, the bypass pick-up solenoid is deenergized. The paper lift-up plate is stopped at the paper feed position.
- The actuator of bypass lift-up position sensor rotates in synchronism with the paper lift-up cam. When the paper lift-up plate is raised, the actuator rotates to thereby unblock the bypass lift-up position sensor. Then, the machine determines that the paper lift-up plate is raised to the paper feed position.
- If the bypass lift-up position sensor remains unblocked even after the bypass pick-up solenoid has been deenergized, the machine determines that the paper lift-up plate is at the paper feed position.
- As the paper level lowers during paper feed, the spring pushes up the paper lift-up plate, so that the paper stack is pushed up to the optimum paper feed position.

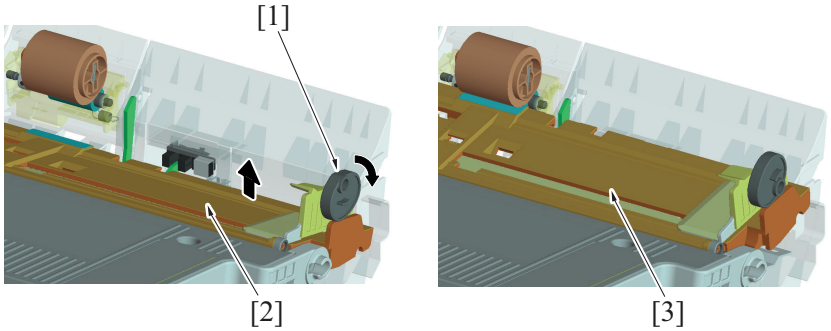

[1]	Paper lift-up cam	[2]	Paper lift-up plate (standby position)
[3]	Paper lift-up plate (paper feed position)	-	-

(b) Move to standby position (down)

- The paper lift-up plate is lowered if there is no print job that uses the manual bypass trays and the paper exit sensor detects a sheet of paper fed from the manual bypass tray.
- The paper lift-up plate is lowered if the above conditions are met even during execution of another job.
- If a bypass paper empty condition is detected at the paper feed position, the paper lift-up plate is lowered to the standby position.
- If a paper misfeed occurs, the paper lift-up plate is stopped at the paper feed position. When the transport motor rotates stably after the misfeed is cleared, the paper lift-up plate is lowered to the standby position.
- After the lapse of a predetermined period of time, the bypass pick-up solenoid is deenergized. The paper lift-up plate is stopped at the standby position. As the paper lift-up plate lowers, the bypass lift-up position sensor is blocked. The machine determines that the paper lift-up plate is at the standby position based on the fact that the bypass lift-up position sensor is blocked even after the bypass pick-up solenoid has been deenergized.

10.3.2 Paper feed control

(1) Pick-up control

- Paper feed operations of the manual bypass tray are driven by the transport motor.
- The bypass pick-up solenoid is energized by a print start signal and the paper is raised to the paper feed position.
- After the paper is raised to the paper feed position, the bypass paper feed clutch is energized.

- When the bypass paper feed clutch is energized, the drive from the transport motor is transmitted to the manual bypass tray paper feed roller, so that the paper can be fed in.
- The manual bypass tray paper feed roller feeds the paper onto the registration roller.
- When the paper fed from the manual bypass tray is reached onto the registration roller, the bypass paper feed clutch is deenergized to stop the manual bypass tray paper feed roller from rotating.
- After paper exiting, the bypass pick-up solenoid is energized and lowered to the standby position.
- If the registration sensor does not detect paper even after the lapse of a predetermined period of time, the machine determines that there is a paper misfeed at the manual bypass tray. Note, however, that the paper feed sequence is repeated a second time if a paper misfeed is detected. If the registration sensor is still unable to detect paper, the machine determines that there is a paper misfeed at the manual bypass tray (paper feed retry control).

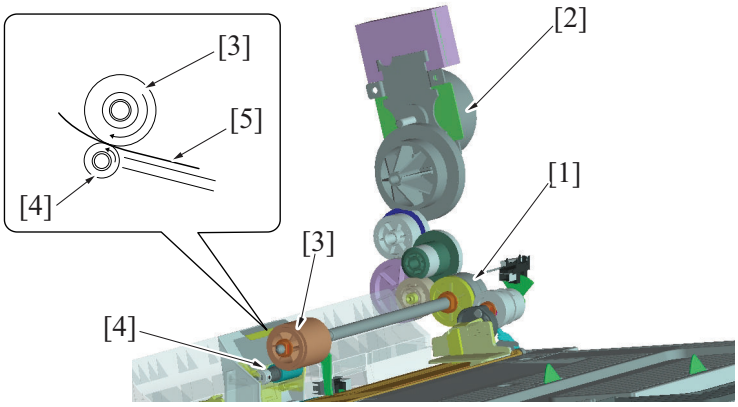

[1]	Bypass paper feed clutch (CL7)	[2]	Transport motor (M1)
[3]	Manual bypass tray feed roller	[4]	Manual bypass tray separation roller
[5]	Paper	-	-

(2) Separation control

- The manual bypass tray separation roller is pressed up against, and driven by, the manual bypass tray feed roller. A torque limited is mounted on the shaft of the manual bypass tray separator roller.
- The acting pressure of the manual bypass tray feed roller/manual bypass tray separation roller/torque limiter serves as the limit torque for preventing double feed.
- When there is no sheet of paper or only one sheet of paper between the manual bypass tray separation roller and manual bypass tray feed roller, the limit torque is exceeded and the manual bypass tray separation roller follows the rotation of the manual bypass tray paper feed roller.
- If there are two or more sheets of paper between the manual bypass tray separation roller and manual bypass tray feed roller, the limit torque is greater than the friction force of the paper, so that the manual bypass tray separation roller stops rotating.
- Because of the stationary manual bypass tray separation roller, the lower sheet of paper in contact with the manual bypass tray separation roller is not fed in, so that the first sheet of paper is properly separated from the second sheet of paper.

(3) Periodically replaced parts

- The manual bypass tray feed roller and manual bypass tray separation roller are periodically replaced parts. These two rollers must be replaced with new ones at the same time.
- Neither the manual bypass tray feed roller nor manual bypass tray separation roller is provided with a new article detection mechanism. When the two rollers are replaced with new ones, the “Manual Tray” counter must be reset to zero using “Counter/Life” of the Service Mode.
- The number of times the manual bypass tray has been subjected to paper feed operations can be checked with the “Manual Tray” counter of the Service Mode.

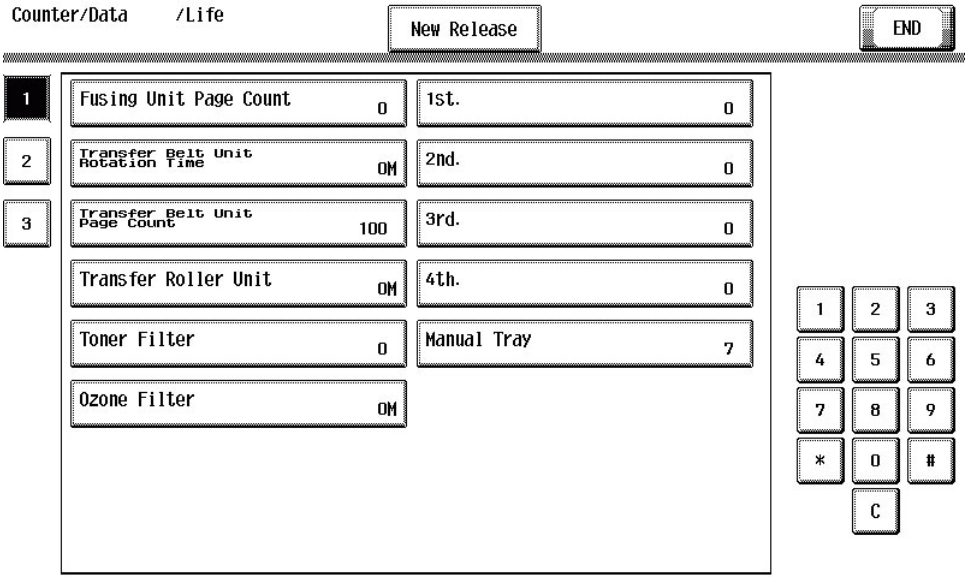

Periodical replacement cycle	Paper feed operations 200,000 times

- For details of the applicable replacement procedures for the manual bypass tray feed roller and manual bypass tray separation roller and the Service Mode, see "F.6.9.3 Replacing the manual bypass tray feed roller, manual bypass tray separation roller assy".

Manual bypass tray feed roller

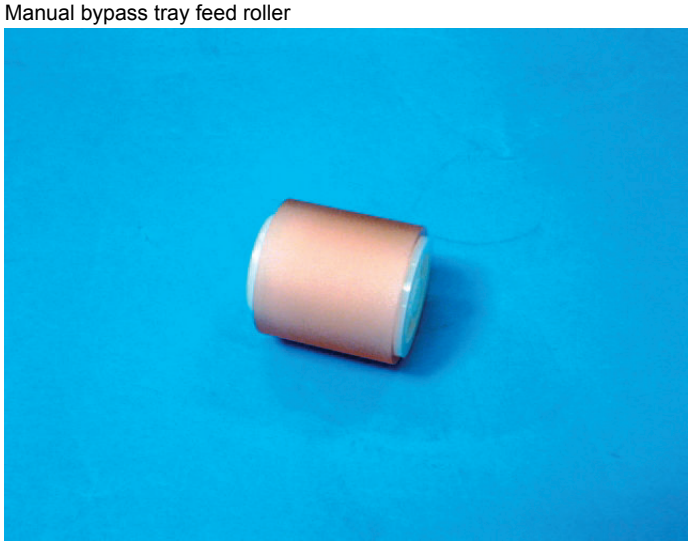

Manual bypass tray separation roller assy



10.3.3 Paper size detection control

- The standard size of the paper loaded in the manual section is detected automatically by the combination of ON or OFF positions of the two bypass FD paper size sensors and the bypass CD paper size VR.
- The two bypass FD paper size sensors are disposed at positions at which they can detect length even the sub tray not opened.
- The paper width is calculated as follows. Moving the paper guide rotates the size detection gear and the bypass CD paper size VR disposed on the same axis of rotation as the size detection gear. With the rotation of the bypass CD paper size VR, a value is detected and used to calculate the paper width.
- The machine supports detection of SRA3 size.
- Irregular paper sizes and postcard can be used by entering the custom size.

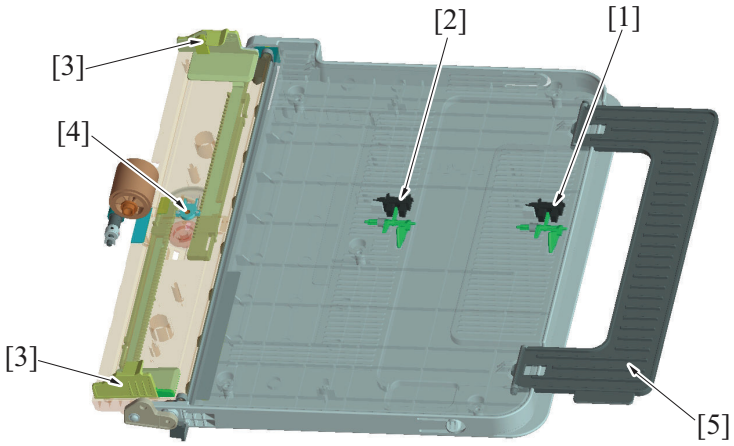

[1]	Bypass FD paper size sensor/2 (PS29)	[2]	Bypass FD paper size sensor/1 (PS28)
[3]	Paper guide	[4]	Bypass CD paper size VR (VR1)

[5]	Sub tray	- -

Metric area

Paper size detected	Bypass FD paper size sensor/1	Bypass FD paper size sensor/2	Bypass CD paper size VR
			Unit: mm
A6S	OFF	OFF	Less than 115
B6S			115 to 144 inclusive
A5			196 to 225 inclusive
B5			242 to 268 inclusive
A5S	ON	OFF	133 to 164 inclusive
B5S			169 to less than 196
A4S			201 to 231 inclusive
Letter ($8^1/_2$ × 11)			255 to less than 288
A4			288 to 330 inclusive
Legal ($8^1/_2$ × 14)	ON	ON	201 to 231 inclusive
B4			242 to less than 268
Ledger (11 × 17)			268 to less than 288
A3			288 to less than 301
A3 wide (12 × 18)			301 to 312 inclusive
SRA3			312 to 330 inclusive

Inch area

Paper size detected	Bypass FD paper size sensor/1	Bypass FD paper size sensor/2	Bypass CD paper size VR
			Unit: mm
A6S	OFF	OFF	Less than 115
B6S			115 to 144 inclusive
Invoice ($5^1/_2$ × $8^1/_2$)			196 to 225 inclusive
Executive ($7^1/_4$ × $10^1/_2$)			242 to 268 inclusive
Invoice S ($5^1/_2$ × $8^1/_2$ S)	ON	OFF	133 to 164 inclusive
Executive S ($7^1/_4$ × $10^1/_2$ S)			169 to less than 196
Letter S ($8^1/_2$ × 11 S)			196 to 225 inclusive
Letter ($8^1/_2$ × 11)			255 to less than 288
A4			288 to 330 inclusive
Legal ($8^1/_2$ × 14)	ON	ON	201 to 231 inclusive
B4			242 to less than 268
Ledger (11 × 17)			268 to less than 288
A3			288 to less than 301
A3 wide (12 × 18)			301 to 312.5 inclusive
SRA3			312.5 to 330 inclusive

10.3.4 Paper empty detection control

- When the paper is loaded in the manual bypass tray, the paper empty detection actuator is pressed by the leading edge of the paper. The paper empty detection actuator is pressed to unblock the bypass paper empty sensor.
- When there is no paper on the manual tray, the paper empty detection actuator is raised. The paper empty detection actuator is returned to its original position to thereby block the bypass paper empty sensor.

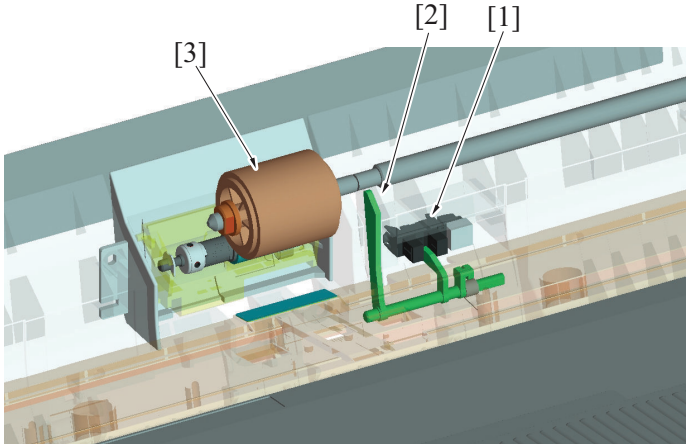

[1]	Bypass paper empty sensor (PS27)	[2]	Actuator
[3]	Manual bypass tray feed roller	-	-

10.3.5 Adjustment for compatibility with heavy paper

- As a field service response to paper misfeed that may occur when heavy paper (300 g/m^2 (79 $^3/_4$ lb)) is used, pressure of the manual bypass tray separation roller against the manual bypass tray feed roller can be increased by changing the mounting position of the spring. Changing the separation roller pressure may solve the paper misfeed problem occurring with a specific type of heavy paper (300 g/m^2 (79 $^3/_4$ lb)).
- For details of procedure changing the mounting position of the spring, see "I.16.2.3 Separator roller pressure adjustment of the bypass tray".

NOTE

- **If plain paper is used under high-temperature, high-humidity environment after the mounting position of the spring has been changed, double feed may at times occur.**

11. PAPER FEED SECTION

11.1 Configuration

11.1.1 Tray1

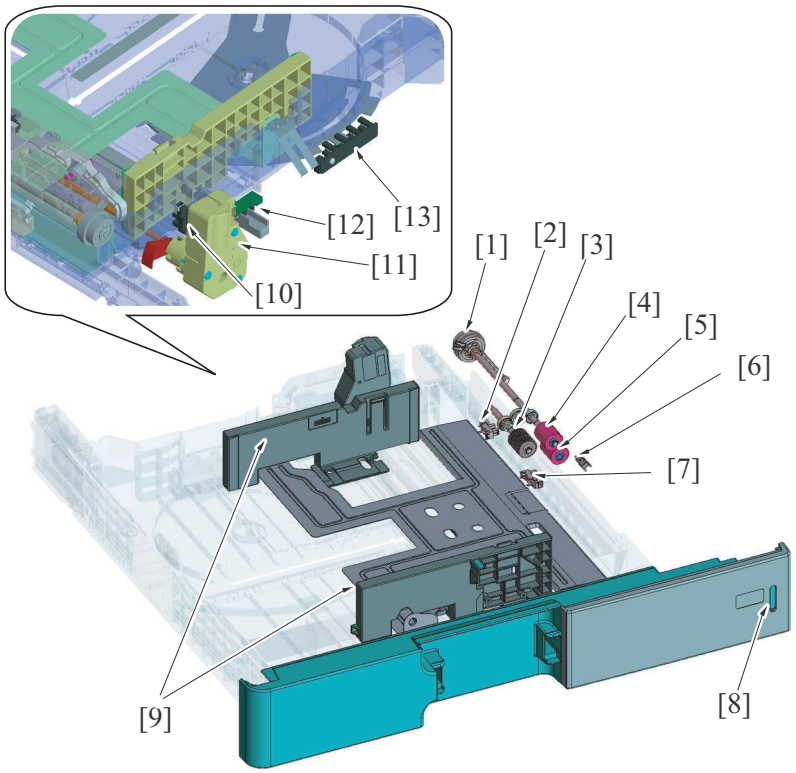

[1]	Tray 1 paper feed clutch (CL3)	[2]	Tray 1 upper limit sensor (PS25)
[3]	Tray 1 pick-up roller	[4]	Tray 1 feed roller
[5]	Tray 1 separation roller	[6]	Tray 1 paper feed sensor (PS23)
[7]	Tray 1 paper empty sensor (PS24)	[8]	Machine condition monitor window
[9]	Paper width guide	[10]	Tray 1 paper near empty sensor (PS11)
[11]	Tray 1 lift-up motor (M12)	[12]	Tray 1 CD paper size board (CDPSB/1)
[13]	Tray 1 FD paper size board (FDPSB/1)	-	-

To improve interchangeability, the pick-up roller, feed roller, and separation roller are held in position on one side. At replacement, remove the tray and snap off the C-clip on one side. This allows each of the three rollers to be removed.

11.1.2 Tray2

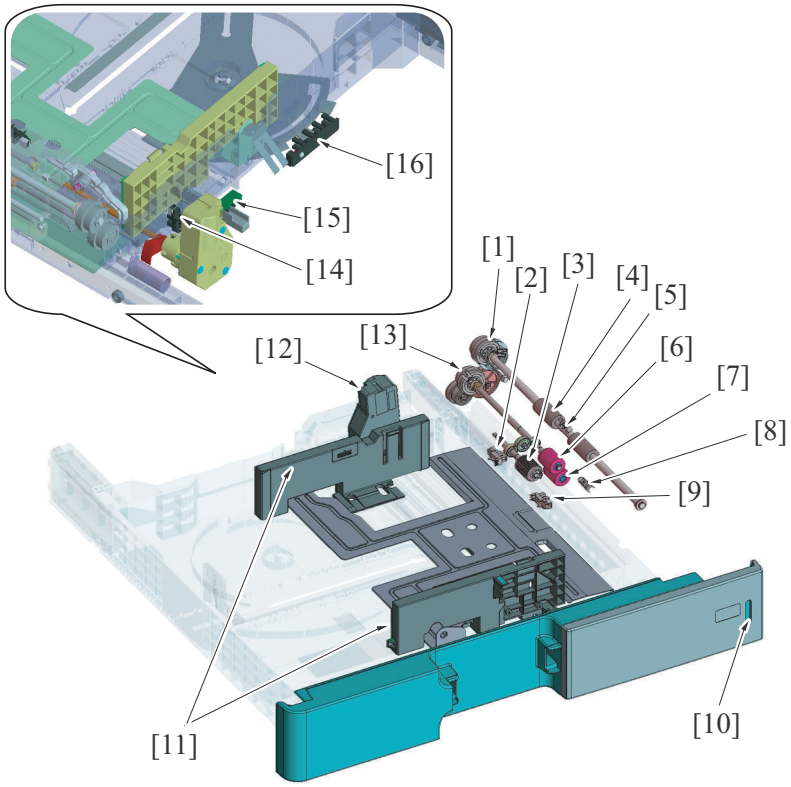

[1]	Tray 2 vertical transport clutch (CL2)	[2]	Tray 2 upper limit sensor (PS22)
[3]	Tray 2 pick-up roller	[4]	Vertical transport roller
[5]	Tray 2 vertical transport sensor (PS19)	[6]	Tray 2 feed roller
[7]	Tray 2 separation roller	[8]	Tray 2 paper feed sensor (PS20)
[9]	Tray 2 paper empty sensor (PS21)	[10]	Machine condition monitor window
[11]	Paper width guide	[12]	Tray 2 lift-up motor (M13)
[13]	Tray 2 paper feed clutch (CL1)	[14]	Tray 2 paper near empty sensor (PS12)
[15]	Tray 2 CD paper size board (CDPSB/2)	[16]	Tray 2 FD paper size board (FDPSB/2)

11.2 Drive

11.2.1 Drive

- Drive parts are arranged in the same way in tray 1 and tray 2. If the description that follows is not identified with tray 1 or tray 2, it is applicable to both tray 1 and tray 2 in terms of mechanism and control.
- Transport motor drives the tray1 and 2 paper feed roller section.
- The drive section of each tray has a clutch that controls rotation of the paper feed roller section.

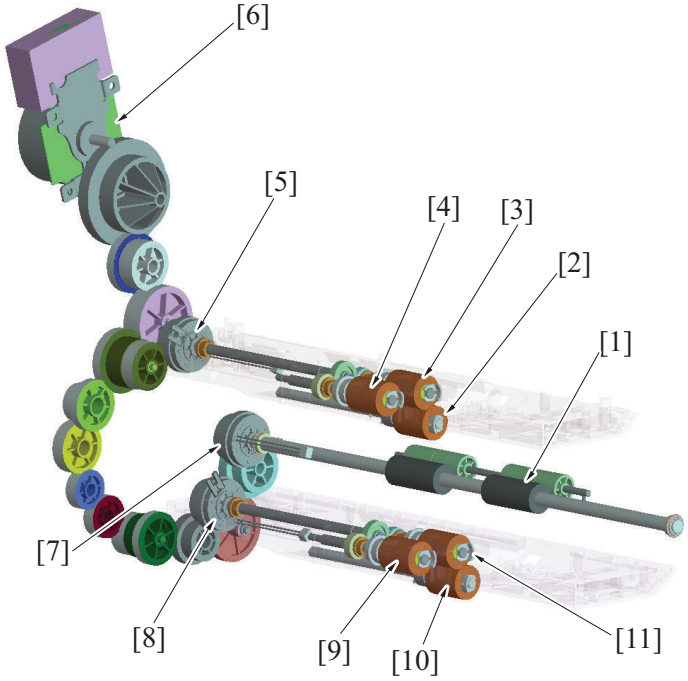

[1]	Vertical transport roller	[2]	Tray 1 separation roller
[3]	Tray 1 feed roller	[4]	Tray 1 pick-up roller
[5]	Tray 1 paper feed clutch (CL3)	[6]	Transport motor (M1)
[7]	Tray 2 vertical transport clutch (CL2)	[8]	Tray 2 paper feed clutch (CL1)
[9]	Tray 2 pick-up roller	[10]	Tray 2 separation roller
[11]	Tray 2 feed roller	-	-

11.2.2 Layout of sensors and rollers

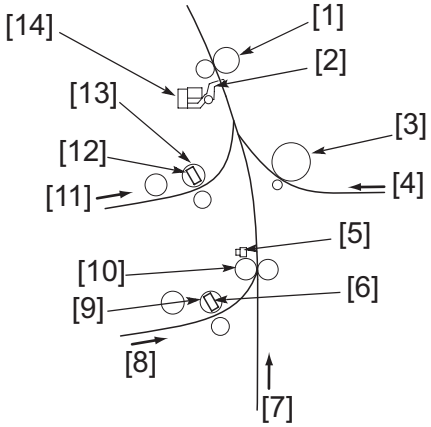

[1]	Registration roller	[2]	Actuator of registration roller
[3]	Manual bypass tray feed roller	[4]	Paper feeding from manual tray
[5]	Tray 2 vertical transport sensor (PS19)	[6]	Tray 2 paper feed sensor (PS20)
[7]	Paper feeding from optional paper feed unit	[8]	Paper feeding from tray 2
[9]	Tray 2 feed roller	[10]	Tray 2 vertical transport roller
[11]	Paper feeding from tray 1	[12]	Tray1 paper feed sensor (PS23)
[13]	Tray 1 paper feed roller	[14]	Registration sensor (PS1)

11.3 Operation

11.3.1 Up/down control

- Tray 1 and Tray 2 are controlled in the same control procedure.

(1) Up operation

- paper lift-up plate B is located under paper lift-up plate A.
- The lift-up plate drive shaft of the tray 1/2 lift-up motor is connected to paper lift-up plate B.
- When the drive shaft of the tray 1/2 lift-up motor rotates, paper lift-up plate B raises paper lift-up plate A.

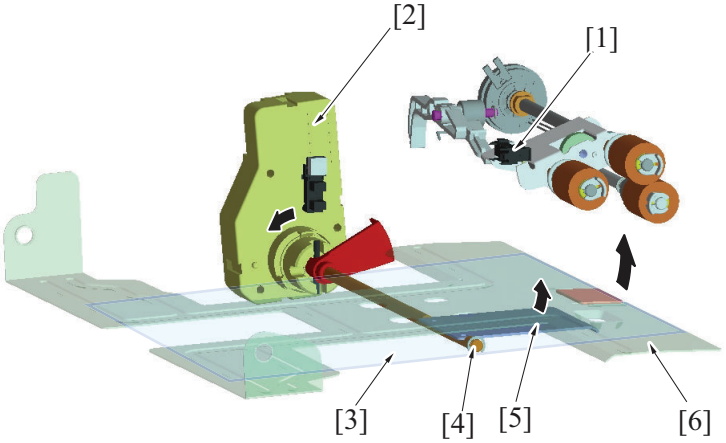

[1]	Tray 1 upper limit sensor (PS25) Tray 2 upper limit sensor (PS22)	[2]	Tray 1 lift-up motor (M12) Tray 2 lift-up motor (M13)
[3]	Paper	[4]	Lift-up plate drive shaft
[5]	Paper lift-up plate B	[6]	Paper lift-up plate A

(2) Down operation

- When the tray is slid out of the machine, the coupling of the paper feed tray 1/2 lift-up motor and the lift-up plate drive shaft are disconnected from each other.

- When the driving force of the paper feed tray 1/2 lift-up motor is released from the lift-up plate drive shaft, the paper lift-up plate starts lowering by its own weight.

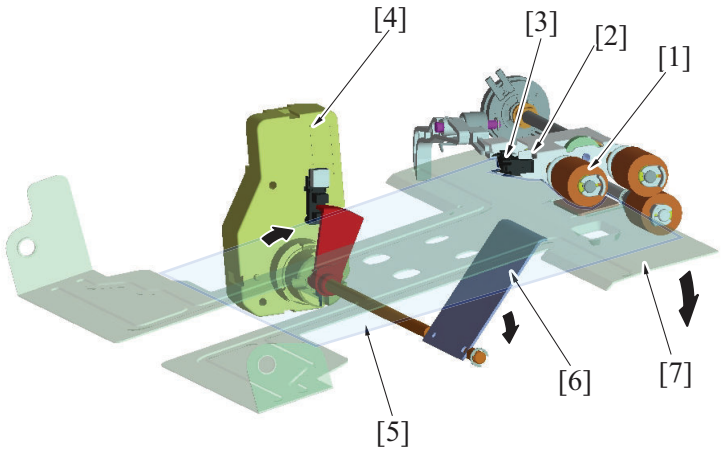

[1]	Pick-up roller	[2]	Light blocking plate of upper limit sensor
[3]	Tray 1 upper limit sensor (PS25) Tray 2 upper limit sensor (PS22)	[4]	Tray 1 lift-up motor (M12) Tray 2 lift-up motor (M13)
[5]	Paper	[6]	Paper lift-up plate B
[7]	Paper lift-up plate A	-	-

(3) Operation timing

(a) When the tray is slid in

- When the tray is slid into the machine, the sensor on the tray 1/2 FD paper size board is blocked. The machine then determines that the tray is slid into position.
- The paper lift-up plate is lowering when the tray is slid out, so that the tray 1/2 upper limit sensor is unblocked.
- Determining after tray insertion that the tray 1/2 upper limit sensor is unblocked, the machine lets the tray 1/2 lift-up motor rotate to start the up operation of the paper lift-up plate.
- When the paper stack is raised to a predetermined height after the up operation of the paper lift-up plate has been started, the tray 1/2 upper limit sensor is blocked.
- Determining that the tray 1/2 upper limit sensor is blocked, the machine stops the tray 1/2 lift-up motor to complete the up operation of the paper lift-up plate.
- Control is provided to make sure that only one tray performs the up operation at one time.
- If the tray is slid out during the up operation of the paper lift-up plate and accordingly the sensor on the tray 1/2 FD paper size board is unblocked, the up operation of the paper lift-up plate is terminated.

(b) During a print cycle

- When the amount of paper decreases as the unit keeps printing, the pick-up roller will gradually come down to unblock the tray 1/2 upper limit sensor. The tray 1/2 lift-up motor will rotate again to lift up the paper lift-up plate.
- When the tray 1/2 upper limit sensor is blocked, the tray 1/2 lift-up motor will stop to stop lift-up the paper lift-up plate.
- The sequence of these operations is repeated to keep constant the pressure between the pick-up roller and paper stack (paper take-up pressure) regardless of the amount of paper still available for use.

11.3.2 Paper feed control

- Tray 1 and tray 2 are controlled in the same control procedure.

(1) Pick-up control

- The paper feed clutch is energized after the lapse of a predetermined period of time after the print start signal.
- The driving force of the transport motor is transmitted to the pick-up roller and paper feed roller when the paper feed clutch is energized. These rollers rotate to pick up and feed a sheet of paper into the machine.

(2) Separation control

- The separation roller is pressed up against the feed roller by the pressure of a spring and an acting pressure generated from torque of the torque limiter.
- The acting pressure of the feed roller/separation roller/torque limiter serves as the limit torque for preventing double feed.
- When there is no sheet of paper or only one sheet of paper between the separation roller and feed roller, the limit torque is exceeded and the separation roller follows the rotation of the feed roller.
- If there are two or more sheets of paper between the separation roller and feed roller, the limit torque is greater than the friction force of the paper, so that the separation roller is not rotated.
- The separation roller causes the lower sheet of paper in contact with the separator roller to be pushed backward in the direction of the tray, so that the lower sheet of paper is properly separated.

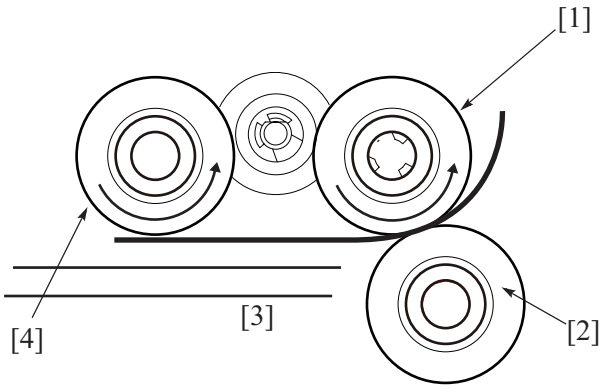

[1]	Feed roller	[2]	Separation roller
[3]	Paper	[4]	Pick-up roller

(3) Paper feed retry control

- If the specified sensor is unable to detect the paper even after the lapse of a predetermined period of time after the start of the paper feed sequence, the machine determines that there is a paper misfeed. To reduce possibility of paper misfeed, if a paper misfeed is detected during a print job under the following conditions, the paper feed sequence is performed again (retry) only once. The feed roller is temporarily stopped, and is then turned again. A paper misfeed results if the specified sensor is still unable to detect the paper even after the paper feed retry sequence, the machine determines that there is a paper misfeed.

Paper feed retry control	Paper port	Control	Sensor name
×	Manual bypass tray	No retry control is performed.	Registration sensor
×	Tray 1		
○	Tray 2	Retry control is performed.	Tray 2 vertical transport sensor
○	Tray 3 (Option: PC-110/210)		Tray 3 vertical transport sensor
○	Tray 4 (Option: PC-210)		Tray 4 vertical transport sensor
○	LCT (Option: PC-410)		Vertical transport sensor

(4) Feed roller speed reduction control

- During multi-print cycles, the target printed pages number is maintained due to correction of the transport speed variations and a proper paper-to-paper distance.
- The feed roller speed reduction stop is performed only during paper feed from tray 1 or tray 2 of bizhub 364e/284e.
- Time it takes the paper feed sensor to be activated after the start of a paper feed sequence is measured. If the distance between two sheets of paper is determined to be narrow, the feed roller is speed reduction stopped, so that a proper paper-to-paper distance can be achieved.

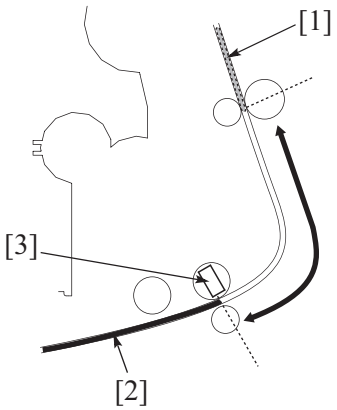

[1]	Preceding sheet	[2]	Sheet of paper being controlled
[3]	Paper feed sensor	-	-

(5) Vertical transport roller speed reduction control

- In the same manner as with the feed roller speed reduction control, control is performed to reduce the speed of the vertical transport roller during a multi-print cycle, thereby maintaining a proper paper-to-paper distance.
- The vertical transport roller speed reduction control is performed during paper feed from tray 3, tray 4, or LCT.
- Time it takes the vertical transport sensor to be activated after the start of a paper feed sequence is measured. If the distance between two sheets of paper is determined to be narrow, the vertical transport roller is decelerated for a predetermined period of time, so that a proper paper-to-paper distance can be achieved.

(6) Paper feed control

(a) Tray 1

- The tray 1 feed roller feeds the paper onto the registration roller.
- The tray 1 paper feed sensor located downstream of the tray 1 feed roller detects the paper fed from the feed roller.
- When the paper fed from the feed roller moves past the registration roller and reaches a predetermined position, the tray 1 paper feed clutch is deenergized to disconnect the driving force of the transport motor. The pick-up roller and feed roller follow the movement of the paper, continuing rotating. The pick-up roller and feed roller stop rotating as soon as the paper moves past them.
- If the registration sensor is unable to detect paper even after the lapse of a predetermined period of time, the machine determines that there is a paper misfeed at tray 1.

(b) Tray 2

- The tray 2 feed roller feeds the paper onto the tray 2 vertical transport roller.
- The tray 2 paper feed sensor located downstream of the tray 2 feed roller detects the paper fed from the tray 2 feed roller.
- When the tray 2 vertical transport sensor located downstream of the tray 2 vertical transport roller along the paper path detects the leading edge of the paper fed from the feed roller, the tray 2 paper feed clutch is deenergized to disconnect the driving force of the transport motor. The pick-up roller and feed roller follow the movement of the paper, continuing rotating. The pick-up roller and feed roller stop rotating as soon as the paper moves past them.
- If the tray 2 vertical transport sensor is unable to detect the leading edge of paper even after the lapse of a predetermined period of time, the machine determines that there is a paper misfeed at tray 2.

(7) Paper misfeed display

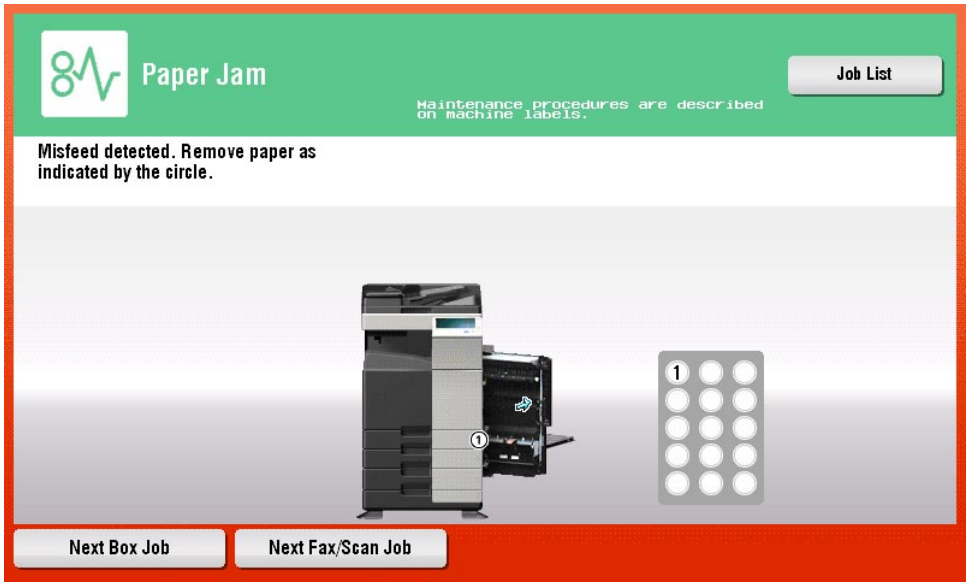

NOTE

- **The setting for the paper misfeed display can be made using "System 2/JAM Code Display Setting" of the Service Mode, by either enabling or disabling the JAM code display.**

(8) Downstream exit control during multi-print cycle

- The following terms are used for convenience' sake throughout this chapter.
  Upstream: Refers to the source side of paper supply relative to the paper feeding direction
  Downstream: Refers to the destination side of paper transport relative to the paper feeding direction
- If a paper misfeed occurs at the paper feed section which is upstream in paper transport, the print cycle is not brought to an immediate stop; rather, the machine allows a sheet of paper, for which the print cycle is to be completed at a downstream side, to continue undergoing the current print cycle and feeds the printed page out after completion of the current print cycle.

(a) Types of paper misfeed governed by downstream exit control

Misfeed at tray 1 paper feed section	Misfeed at manual bypass tray paper feed section
Misfeed at tray 2 paper feed section	Misfeed at vertical transport section
Misfeed at tray 3 paper feed section	
Misfeed at tray 4 paper feed section	

(b) 1-sided printing

- In consecutive 1-sided printing, the paper causes a jamming at the paper feed tray section.
- 1st sheet after an image transfer is remained at the paper exit section.
- 2nd sheet before an image transfer is remained at the fusing section and the vertical conveyance section.

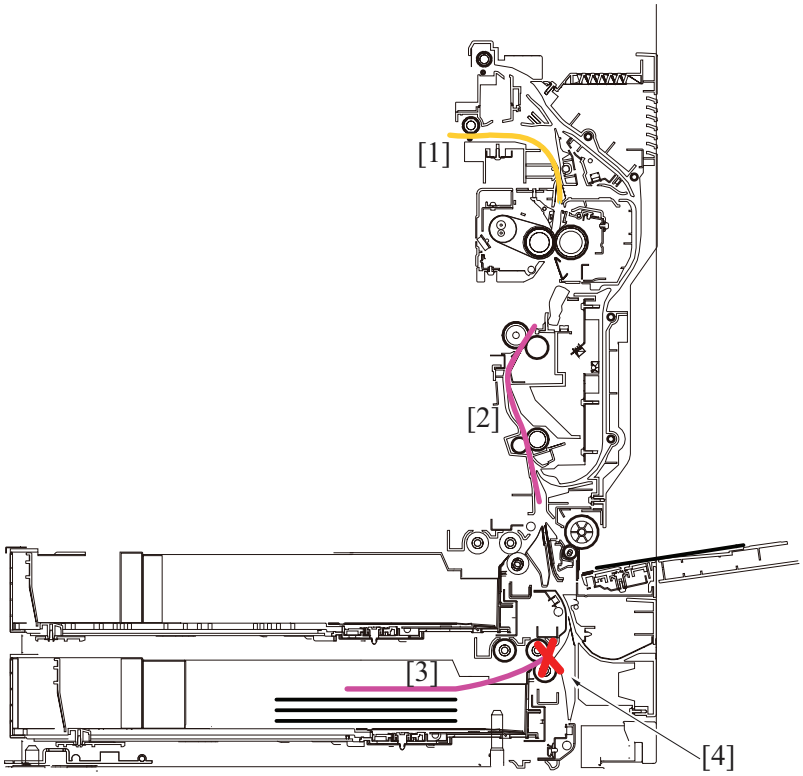

[1]	Sheet after a 1-sided image transfer	[2]	Sheet before a 1-sided image transfer
[3]	Jamming paper	[4]	Jamming

Operation

1. Stop feed/transport operation for jamming paper [3].
2. Exit paper [1].
3. Transfer and fuse image onto, and exit, sheet [2].

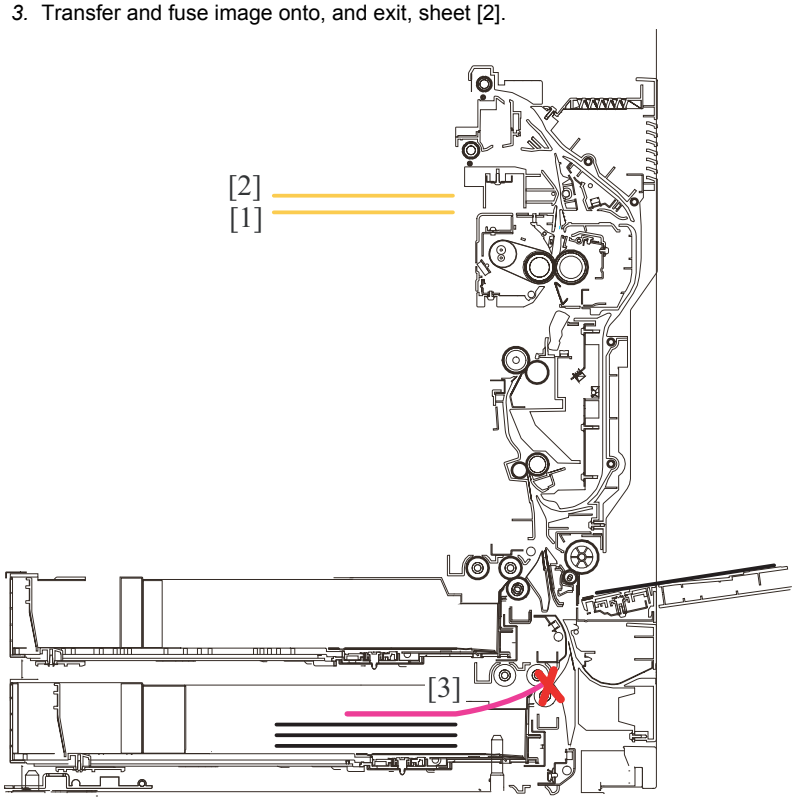

(c) 2-sided printing

- In consecutive 2-sided printing, the paper causes a jamming at the paper feed tray section.
- One sheet after a 2-sided image transfer is remained at the paper exit section.
- Two sheets before a 1-sided image fusing is remained at the duplex section.
- One sheet before an image transfer is remained at the vertical conveyance section and the registration section.

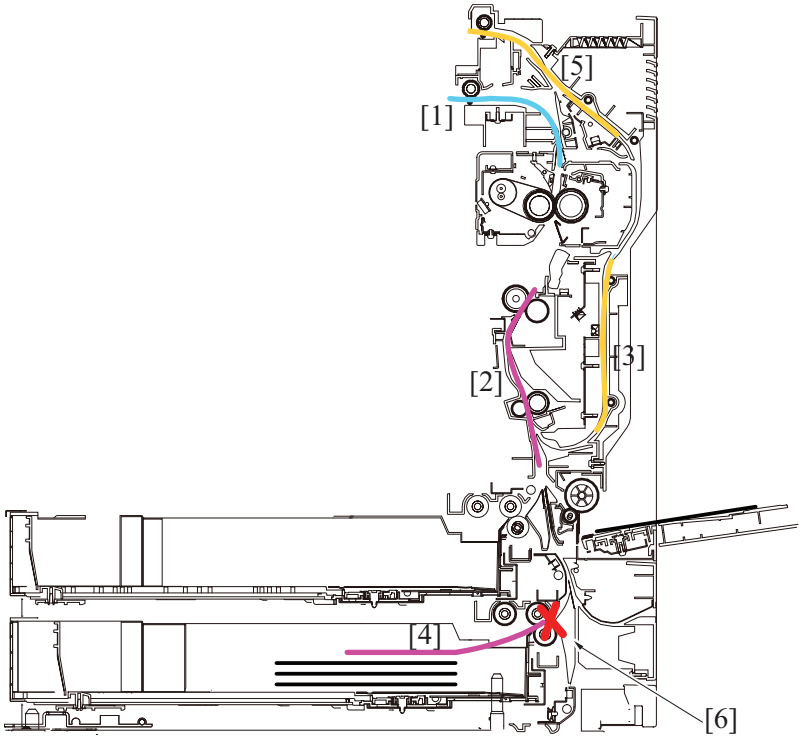

[1]	Sheet after a 2-sided image transfer	[2]	Sheet before a 1-sided image transfer
[3]	Sheet after a 1-sided image transfer	[4]	Jamming paper
[5]	Sheet after a 1-sided image transfer	[6]	Jamming

Operation

1. Stop feed/transport operation for jamming paper [4].
2. Exit paper [1].
3. Transfer and fuse 2-side image onto, and exit, sheets [3] and [5] located at the reverse/duplex section.
4. Print 2-side image onto, and exit, sheet [2] located before image transfer.

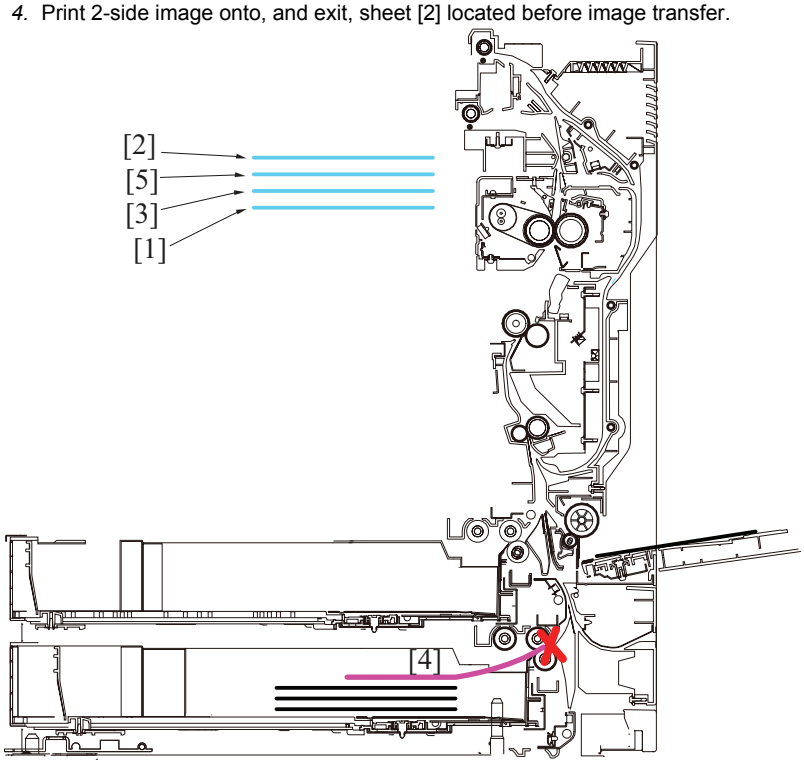

(9) Periodically replaced parts

- The pick-up roller, feed roller, and separation roller are periodically replaced parts. These three rollers must be replaced with new ones at the same time.
- None of the pick-up roller, feed roller, and separation roller is provided with a new article detection mechanism. When the three rollers are replaced with new ones, the “1st.” or “2nd.” counter must be reset to zero using “Counter/ Life” of the Service Mode.
- The number of times tray 1/tray 2 has been subjected to paper feed operations can be checked with the “1st./2nd.” counter of the Service Mode.

Periodical replacement cycle	Paper feed operations 300,000 times

- For details of the applicable replacement procedures for the pick-up roller, feed roller, and separation roller and the Service Mode, see F. 6.9.1 Replacing the tray 1 feed roller, tray 1 pick-up roller, tray 1 separation roller, F.6.9.2 Replacing the tray 2 feed roller, tray 2 pick-up roller, tray 2 separation roller.

Pick-up roller

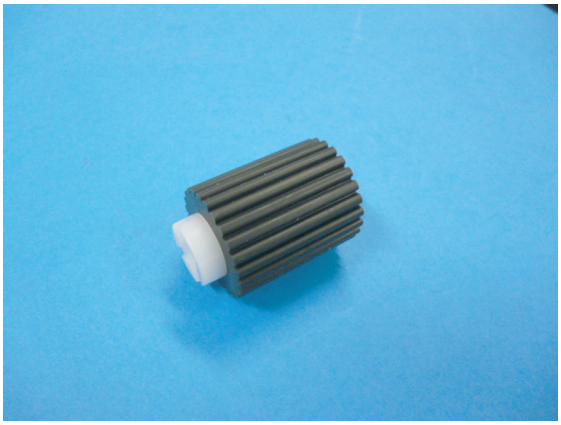

Feed roller/Separation roller

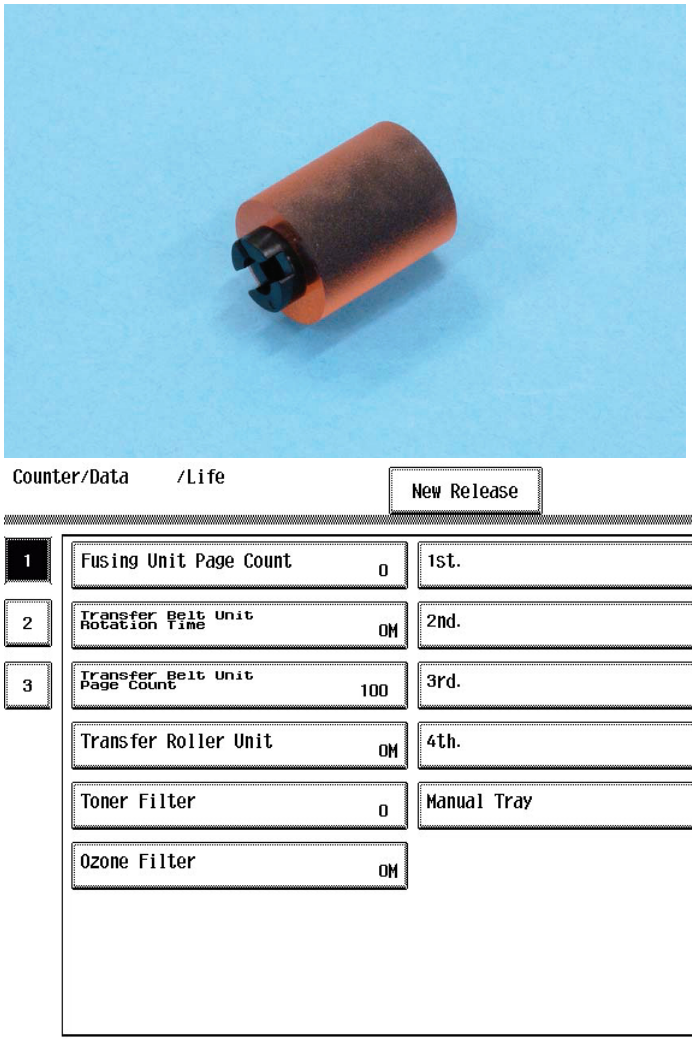

11.3.3 Paper size detection control

(1) Main scanning direction

- The size in the main scanning direction is detected based on the combination of transmission type photosensors 1 and 2 mounted on the CD paper size board being unblocked or blocked.
- The CD paper size sensor is unblocked or blocked according to the position of the paper width detection plate connected to the paper width guide plate.

(2) Sub scanning direction

- The size in the sub scanning direction is detected based on the combination of ON or OFF position of interrupter-type photosensor 1 to 4 mounted on FD paper sensor board.
- Each of switches 1 to 4 is unblocked or blocked by the paper length detection plate connected to the paper length guide plate.
- The sensor on the FD paper size board also functions to detect whether the tray is mounted.

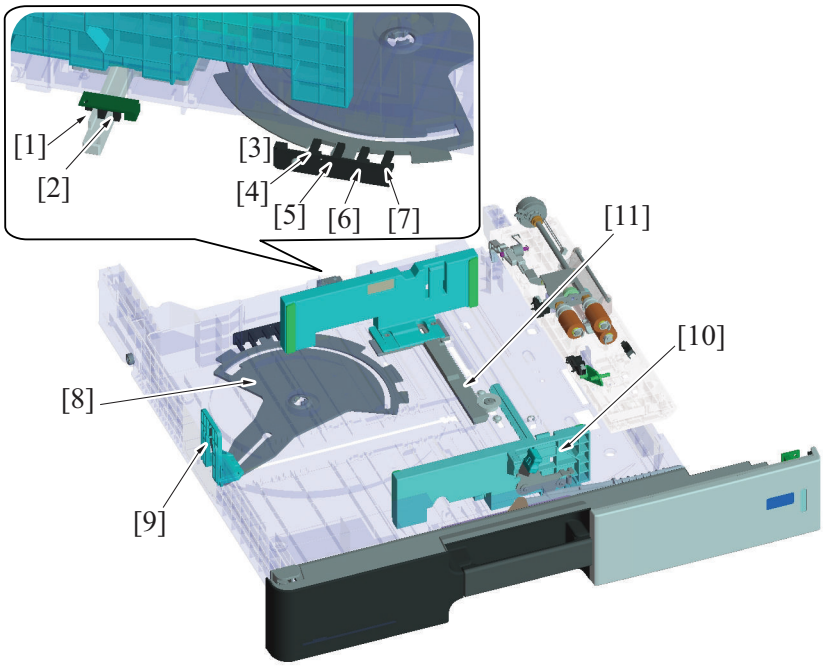

[1]	CD paper sensor/2	[2]	CD paper sensor/1
[3]	FD paper size board	[4]	FD paper sensor/1
[5]	FD paper sensor/2	[6]	FD paper sensor/3
[7]	FD paper sensor/4	[8]	Paper length detection plate
[9]	Paper length guide	[10]	Paper width guide
[11]	Paper width detection plate	-	-

(3) Sheet size determination

- The paper size is determined based on the combination of the main scanning width detected by the two CD paper sensors and the sub-scanning length detected by the four FD paper sensors.

Paper size	FD paper size board				CD paper size board	
	Sensor 4	Sensor 3	Sensor 2	Sensor 1	Sensor 2	Sensor 1
SRA3 *1	H	L	L	H	H	H
A3 Wide *1	H	L	L	H	L	H
A3	L	L	H	L	L	H
B4	L	H	H	H	L	H
A4S	H	H	L	L	L	L
A4	H	L	H	L	L	H
B5S	L	H	H	L	L	L
B5	L	H	L	L	L	H
A5S, Invoice S *2	H	L	H	L	L	L
Ledger (11 × 17)	L	L	H	L	H	H
Legal (8 $^{1}/_{2}$ ×14)	L	H	H	H	L	L
Letter S (8 $^{1}/_{2}$ ×11 S)	L	L	L	H	L	L
Letter (8 $^{1}/_{2}$ ×11)	H	L	H	L	H	H
FLS S *3	H	H	H	H	L	L
K8 S (270 mm × 390 mm)	L	H	L	H	H	H
K16 (270 mm × 195 mm)	L	H	H	L	H	H

- *1: SRA3 and A3 Wide are support only from the tray 2 and the bypass tray.
- *2: Detected is Invoice S for the destination of North America and A5S for other destinations.
- *3: One of the following paper sizes can be selected to be set for FLS. 8 $^{1}/_{2}$×13 $^{1}/_{2}$, 8×13, 8 $^{1}/_{4}$×13, 8 $^{1}/_{2}$×13

(a) Sensor states

Sensor	Physical state	
	HIGH signal	LOW signal
FD paper size board : Sensors 1 to 4	Blocked	Unblocked
CD paper size board: Sensor 1 or 2		

11.3.4 Remaining paper detection control

- The remaining paper detection control is performed under any of the following conditions:
  "Tray 1/tray 2 is closed in position"
  "The up/down control of the paper lift-up plate is completed"

(1) Paper near-empty detection

- The tray 1/2 near empty sensor detects a paper near-empty condition of the tray.
- As paper is consumed, the paper lift-up plate is raised. This raises the near empty detection actuator provided at the lift-up plate drive shaft of the lift-up motor.
- When the near empty detection actuator is raised to a position at which the tray 1/2 near empty sensor is blocked, the machine detects a near-empty condition.
- A near-empty condition is detected when the amount of paper still available for use becomes about 50 sheets.

When a sufficient amount of paper is loaded

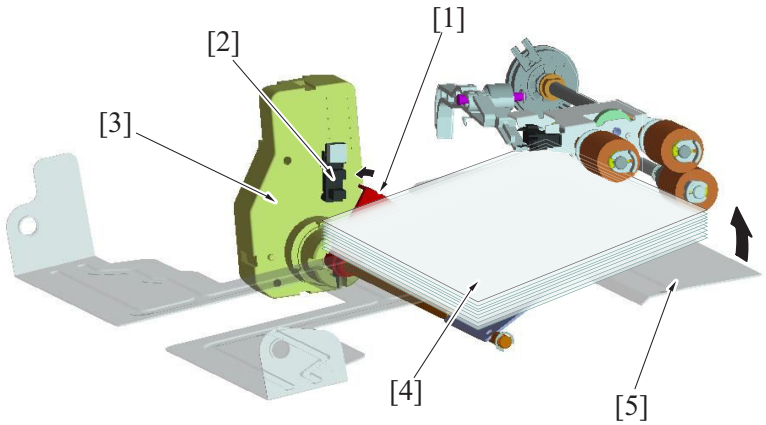

Near empty condition

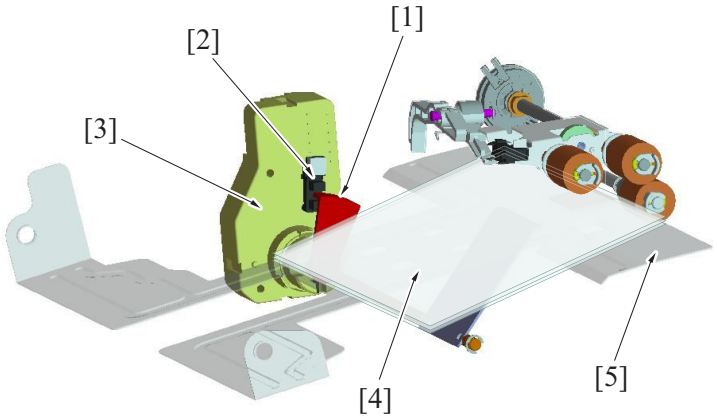

[1]	Actuator	[2]	Tray 1/2 paper near empty sensor (PS11/PS12)
[3]	Tray 1/2 lift-up motor (M12/M13)	[4]	Paper
[5]	Paper lift-up plate	-	-

(2) Paper empty detection

- Tray 1 and tray 2 use the same control system to detect a paper empty condition.
- A paper empty condition is detected by the tray 1/2 paper empty sensor.

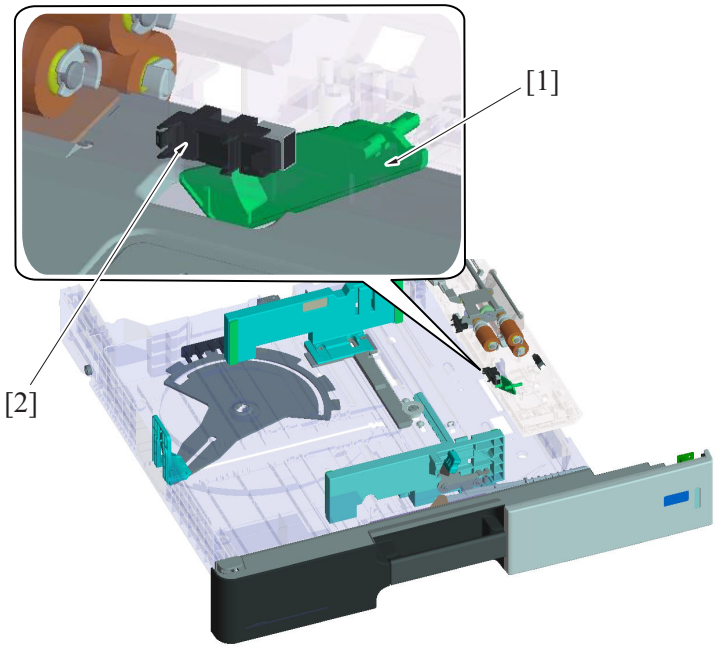

[1]	Actuator	[2]	Tray 1/2 paper empty sensor (PS24/PS21)

(3) Remaining paper level display

- The amount of remaining paper is indicated by the LED on the right side of each tray and by the screen of the control panel.
- The following shows how the level is displayed.

Tray condition	Empty	Near empty	Other statuses (Including during lift-up and no tray conditions)
LED	ON	Blinking/OFF *	OFF

- *: LED turns OFF when Paper Remainder is set to Type 2: Service Mode −> System 1 −> Machine State LED Setting −> Paper Remainder.



[1]	Tray 1 empty display window	[2]	Tray 2 empty display window

11.3.5 Paper feed tray locking mechanism

- The paper feed tray is provided with a locking mechanism.

(1) Unlocking the paper feed tray

- Withdrawing the lever of the paper feed tray to the front will disengage the tray lock lever provided on the right side of the paper feed tray.
- The paper feed tray can be pulled out of the machine by continuing pulling the lever with the tray lock lever disengaged.
- Rollers are provided for the right and left tray rails. They reduce the operating force required for sliding in/out the paper feed tray.

(2) Locking the paper feed tray

- Pushing the lever of the paper feed tray all the way toward the rear will allow the paper feed tray to be slid into the machine.
- When the paper feed tray is inserted all the way in place, the tray lock lever provided on the right side of the paper feed tray locks the tray in place.
- To prevent false detection, the paper feed tray is provided with a spring in the rear that pushes the tray back out if the tray is not inserted all the way in place.

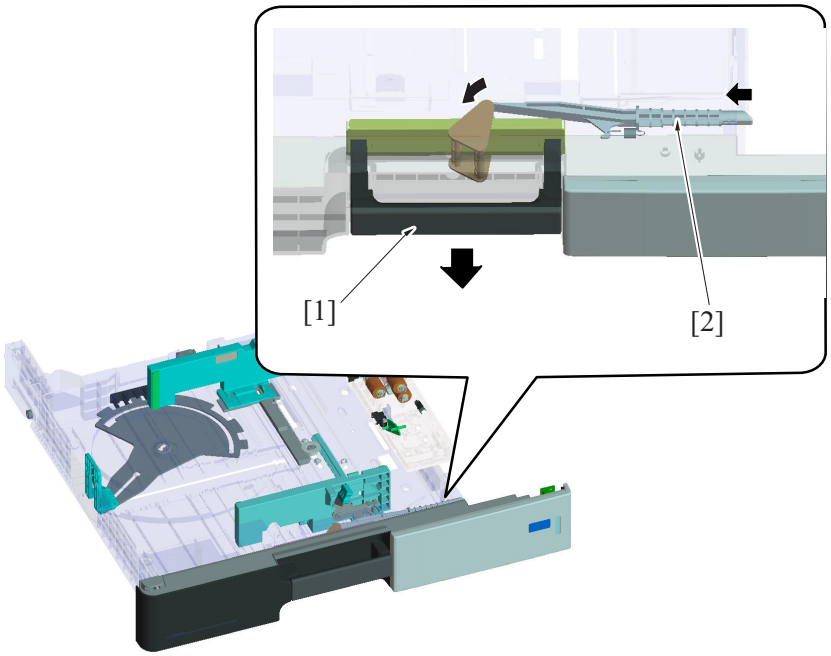

[1]	Lever of the paper feed tray	[2]	Lock lever

11.3.6 Spring for thin paper use

- A paper misfeed may infrequently occur, if lightweight 52 g/m^2 (13 $^{13}/_{16}$ lb) recycled paper or the like is used under high temperature, high humidity environment. Occurrence of paper misfeed can be reduced by using the pick-up spring mounted in the paper feed unit 2.
- A paper misfeed may occur when plain paper is used under high temperature, high humidity environment or thick paper is fed through the machine after the pick-up spring has been replaced with one for thin paper use.
- For details, see "I.16.2.2 Pick-up pressure adjustment of the tray 1/2".

12. VERTICAL TRANSPORT SECTION

12.1 Configuration

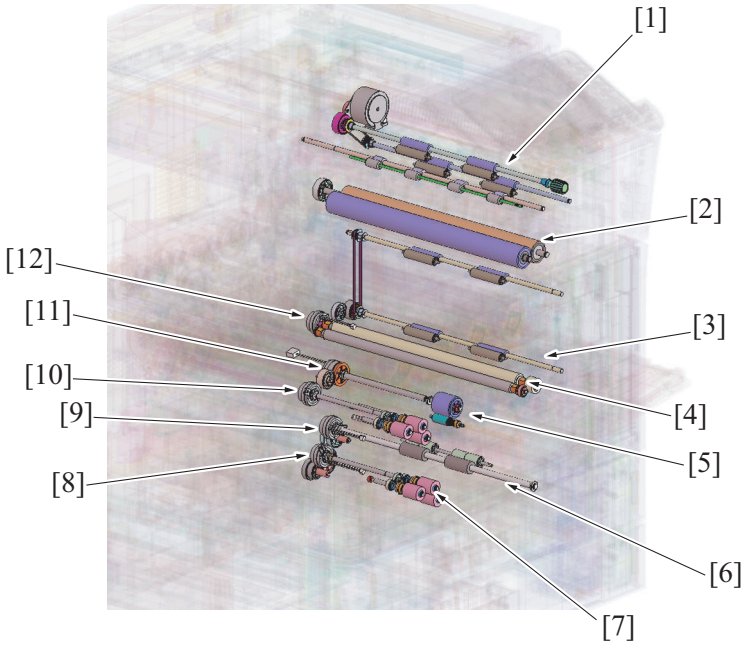

[1]	ADU transport roller/1	[2]	Pressure roller
[3]	ADU transport roller/4	[4]	Registration roller
[5]	Manual bypass tray feed roller	[6]	Vertical transport roller
[7]	Feed roller	[8]	Tray 2 paper feed clutch (CL1)
[9]	Tray 2 vertical transport clutch (CL2)	[10]	Tray 1 paper feed clutch (CL3)
[11]	Bypass paper feed clutch (CL7)	[12]	Registration clutch (CL4)

12.2 Drive

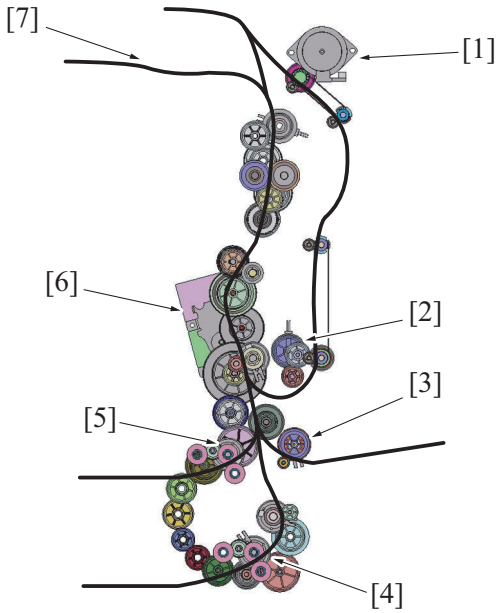

[1]	Reverse motor (M4)	[2]	ADU transport clutch (CL6)
[3]	Bypass paper feed clutch (CL7)	[4]	Tray 2 vertical transport clutch (CL2)
[5]	Tray1 paper feed clutch (CL3)	[6]	Transport motor (M1)
[7]	Paper path	-	-

12.3 Operation

12.3.1 Vertical transport control

- The vertical transport section transports paper fed from tray 1, 2, or optional paper feed unit onto the registration section.
- The paper fed from tray 1 is transported onto the registration section by the tray 1 feed roller.
- The paper fed from the manual bypass tray is transported onto the registration section by the manual bypass tray feed roller.
- The paper fed from tray 2 is transported onto the registration section by the tray 2 vertical transport roller.

12.3.2 Transport clutch control

(1) Tray 2 vertical transport clutch

- The tray 2 vertical transport clutch is connected to the tray 2 vertical transport roller. When the tray 2 vertical transport clutch is energized, the driving force of the transport motor is transmitted, so that the tray 2 vertical transport roller is rotated.

12.3.3 Operation timing

(1) Tray 2 vertical transport roller

- The tray 2 paper feed sensor located downstream of the tray 2 feed roller detects the paper fed from the tray 2 feed roller.
- When the tray 2 vertical transport sensor located downstream of the tray 2 vertical transport roller along the paper path detects the leading edge of the paper fed from the feed roller, the tray 2 paper feed clutch is deenergized to disconnect the driving force of the transport motor. The pick-up roller and feed roller follow the movement of the paper, continuing rotating. The pick-up roller and feed roller stop rotating as soon as the paper moves past them.
- If the tray 2 vertical transport sensor is unable to detect the leading edge of paper even after the lapse of a predetermined period of time, the machine determines that there is a paper misfeed at tray 2.

12.3.4 Right door mechanism

- The machine has the right door to enable easy access into the inside of the machine for clearing a paper misfeed or performing other service jobs.
- The right door is mounted with the mechanisms of the vertical transport section, paper feed section (manual bypass tray), and the duplex section. For detailed functions of the paper feed section (manual bypass tray) and the duplex section, see the corresponding chapters.
- The registration unit (2nd transfer section, registration section, and duplex section) is found inside the right door when opened.
- The registration unit is not provided with a locking mechanism or open/close detection mechanism. The locking mechanism and open/close detection mechanism provided for the right door are used also for the registration unit. For details of the registration unit, see "O.13.1 Configuration".

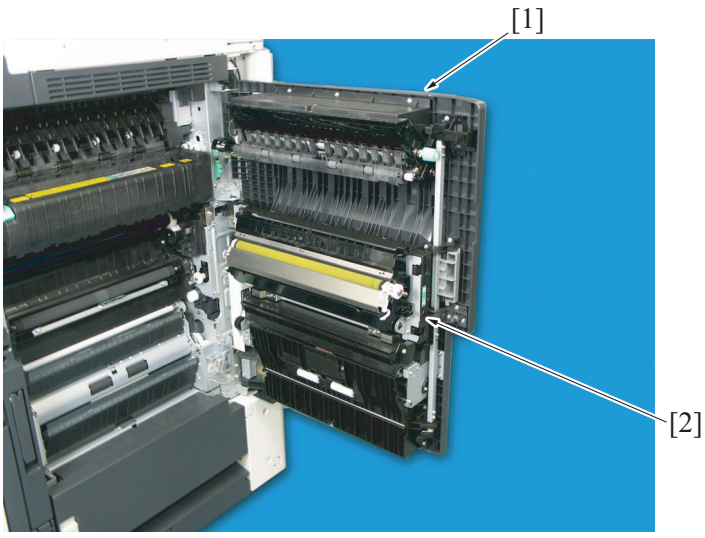

[1]	Right door section	[2]	Registration unit

Registration unit (registration section/ 2nd transfer section)

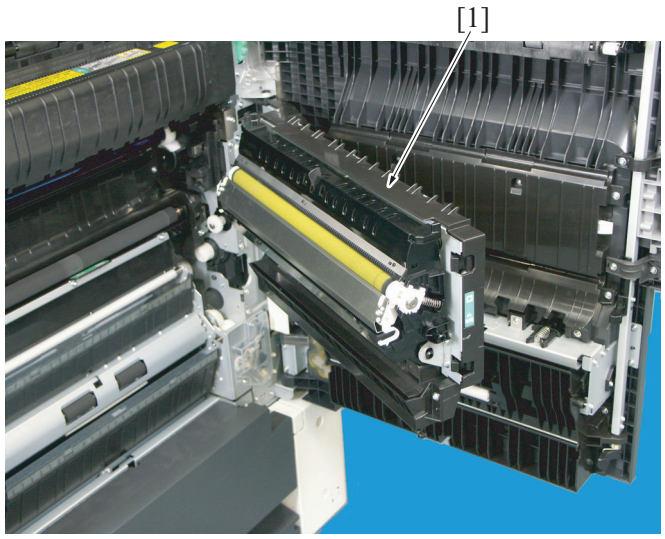

[1]	Registration unit	-	-

Registration unit (duplex section)

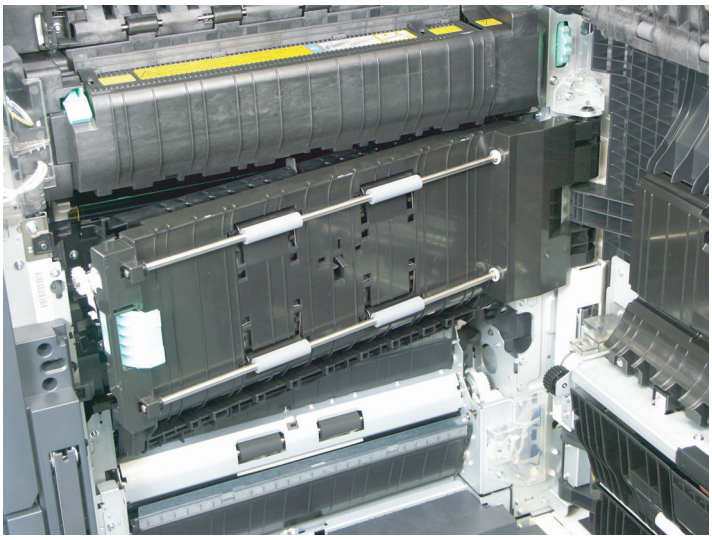

(1) Right door locking mechanism

- The right door is provided with a locking mechanism.

(a) Unlocking the right door

- Withdrawing the lever of the right door to the front will disengage the door lock pawls (three) provided at the front side of the right door.

(b) Locking the right door

- Close the registration unit and then close the right door. When the right door is closed in its correct position, the door lock pawls (three) provided at the front side of the right door lock the right door in place.

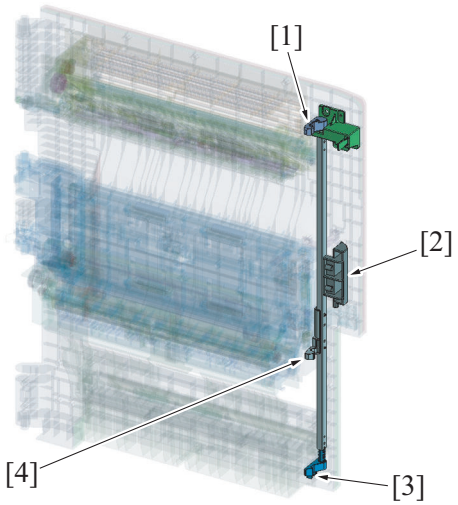

[1]	Door lock pawl (upper)	[2]	Right door lever
[3]	Door lock pawl (lower)	[4]	Door lock pawl (center)

(2) Registration unit lock mechanism

1. When the right door is opened, the registration unit that is left locked to the right door is also opened.

- The registration unit can be separated from the right door when the registration unit lever is disengaged from the door lock pawl disposed on the right door side.

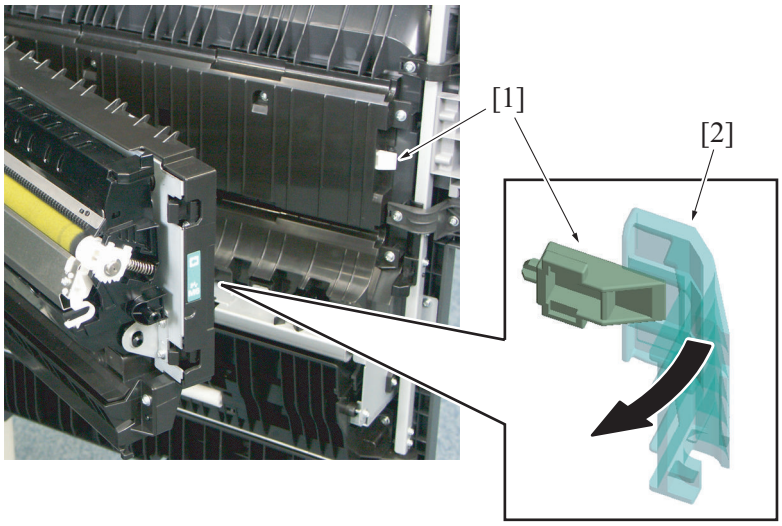

[1]	Door lock pawl	[2]	Lever

(3) Right door open/close detection mechanism

- The right door switch detects that the right door is opened or closed.
- When the right door is closed, the open/close detection plate provided at an upper portion at the front of the right door presses the actuator of the right door switch. This turns ON the right door switch and the machine determines that the right door is closed.
- When the right door is opened, the actuator of the right door switch is released. This turns OFF the right door switch and the machine determines that the right door is opened, giving a message that prompts the operator to close the right door.
- On determining that the right door is open, the machine prohibits the use of all jobs but the fax reception job. A paper misfeed results if the right door is opened during a print cycle.

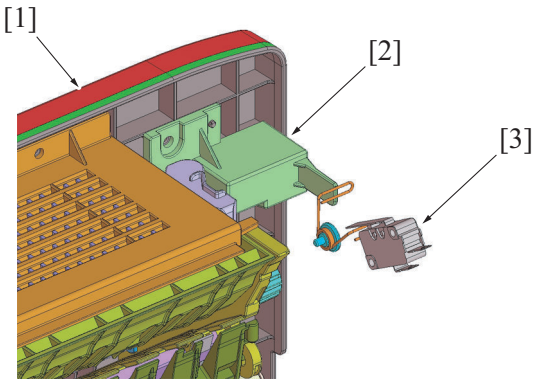

[1]	Right door	[2]	Open/Close detection plate
[3]	Right door switch (SW2)	-	-

13. REGISTRATION SECTION

13.1 Configuration

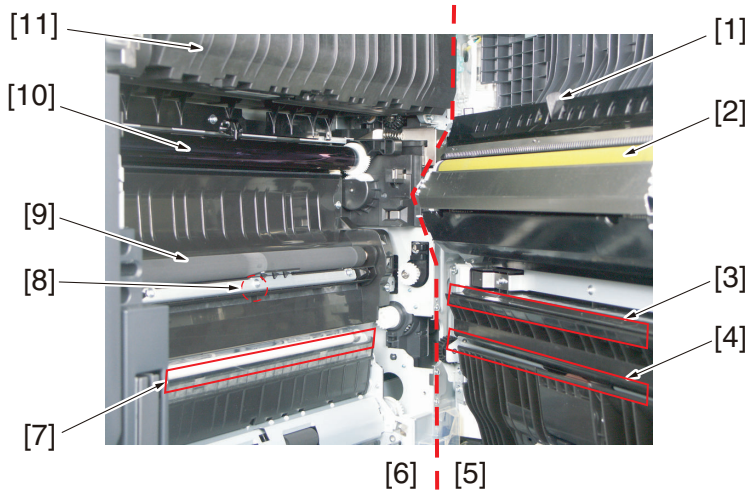

[1]	Fusing loop actuator	[2]	2nd transfer roller
[3]	Duplex section re-feed paper	[4]	Manual bypass tray feed paper
[5]	Right door side	[6]	Main body side
[7]	Tray 1 feed paper	[8]	Registration sensor (inside)
[9]	Registration roller	[10]	Transfer belt
[11]	Fusing unit	-	-

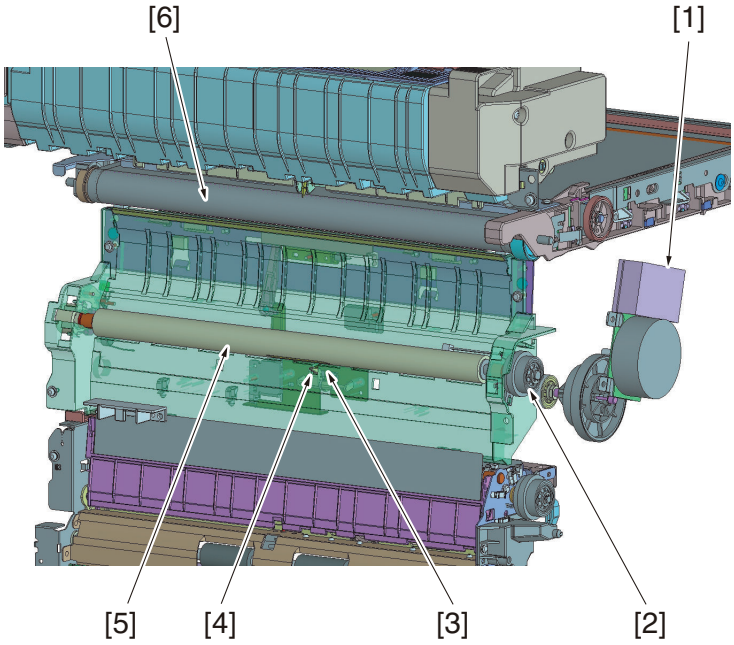

[1]	Transport motor (M1)	[2]	Registration clutch (CL4)
[3]	Registration sensor (PS1)	[4]	Registration sensor actuator
[5]	Registration roller	[6]	Transfer belt

13.2 Drive

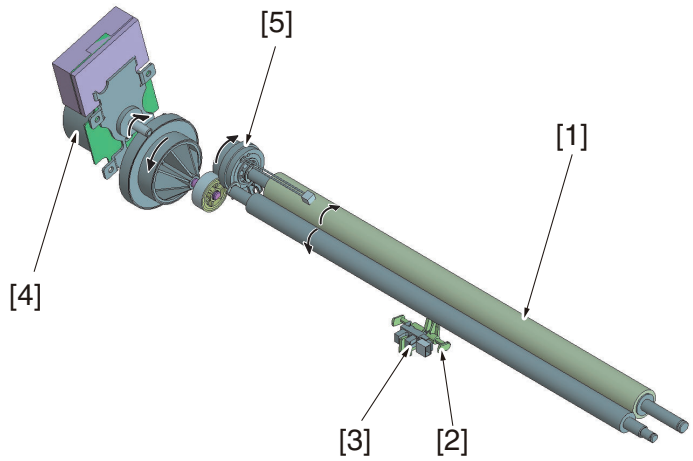

[1]	Registration roller	[2]	Registration sensor actuator
[3]	Registration sensor (PS1)	[4]	Transport motor (M1)
[5]	Registration clutch (CL4)	-	-

13.3 Operation

13.3.1 Registration control

- At the registration section, a loop is formed in the paper between the tray 1 paper feed roller (or tray 2 vertical transport roller or bypass paper feed roller) and the registration roller to thereby minimize skew in paper.

(1) Control

1. When the registration clutch is energized, the transport motor is connected to the registration roller, so that the registration roller is rotated.

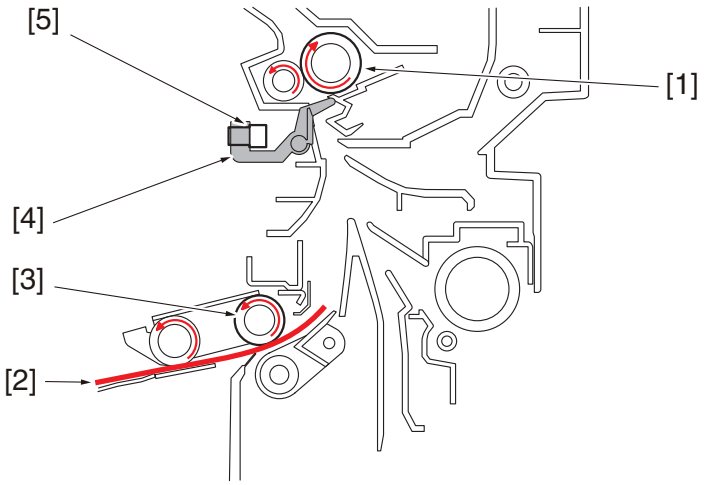

[1]	Registration roller rotating	[2]	Paper
[3]	Tray 1 feed roller	[4]	Actuator
[5]	Registration sensor (PS1)	-	-

2. When the paper reaches the registration sensor actuator, the registration sensor output changes and the registration roller is stopped.

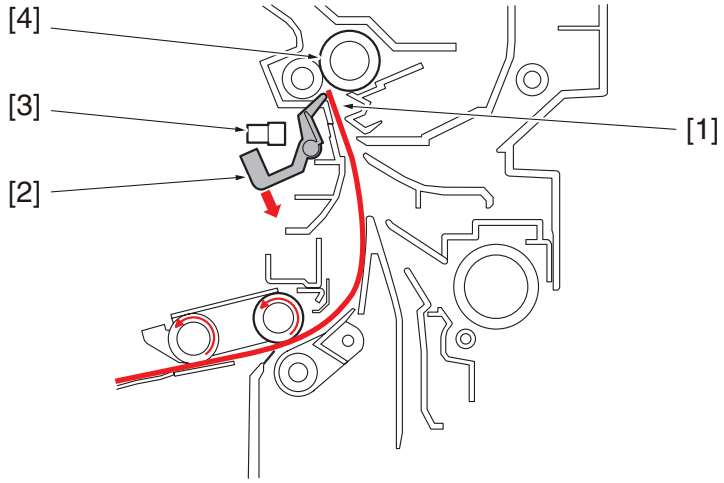

[1]	Paper reaching registration sensor	[2]	Registration sensor unblocked
[3]	Registration sensor (PS1)	[4]	Registration roller stopping

3. Because the registration roller stops, a loop is formed in the paper, which minimizes skew in the paper.

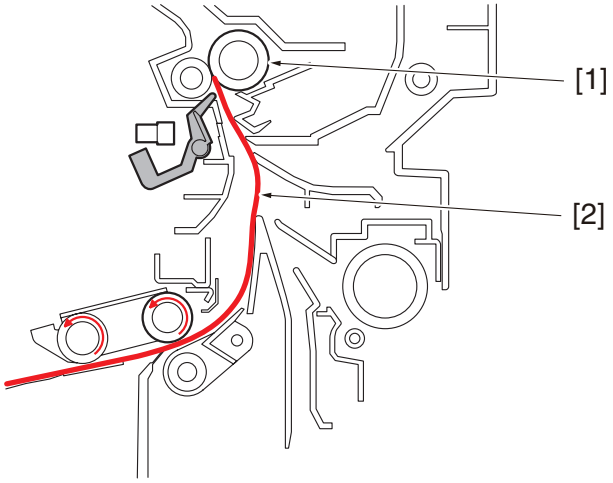

[1]	Registration roller stopping rotating	[2]	Loop formed in paper

4. The registration roller starts rotating again at timing at which to synchronize the image start position with paper position.

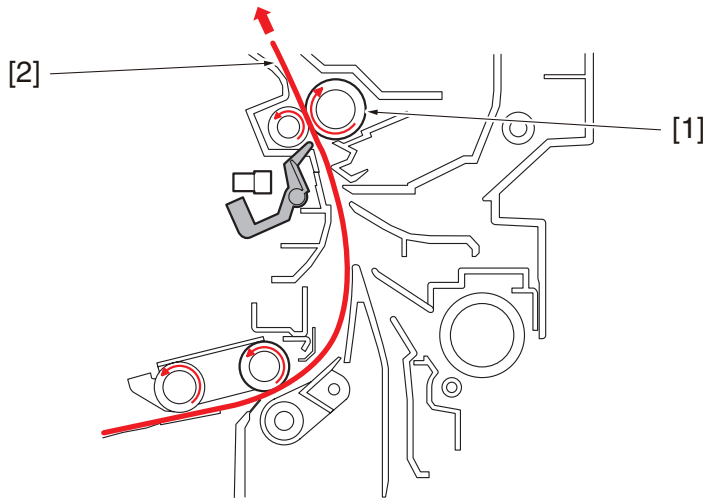

[1]	Registration roller starting rotating again	[2]	Transporting paper to 2nd transfer section

(2) Adjustment

- The amount of the loop of the paper can be adjusted in the [Service Mode] -> [Machine] -> [Printer Reg. Loop Adj.].

Changing the adjustment value will vary timing at which the tray 1 paper feed clutch (or tray 2 vertical transport clutch) is deenergized, which results in the length of loop being varied.

14. FUSING SECTION

14.1 Configuration

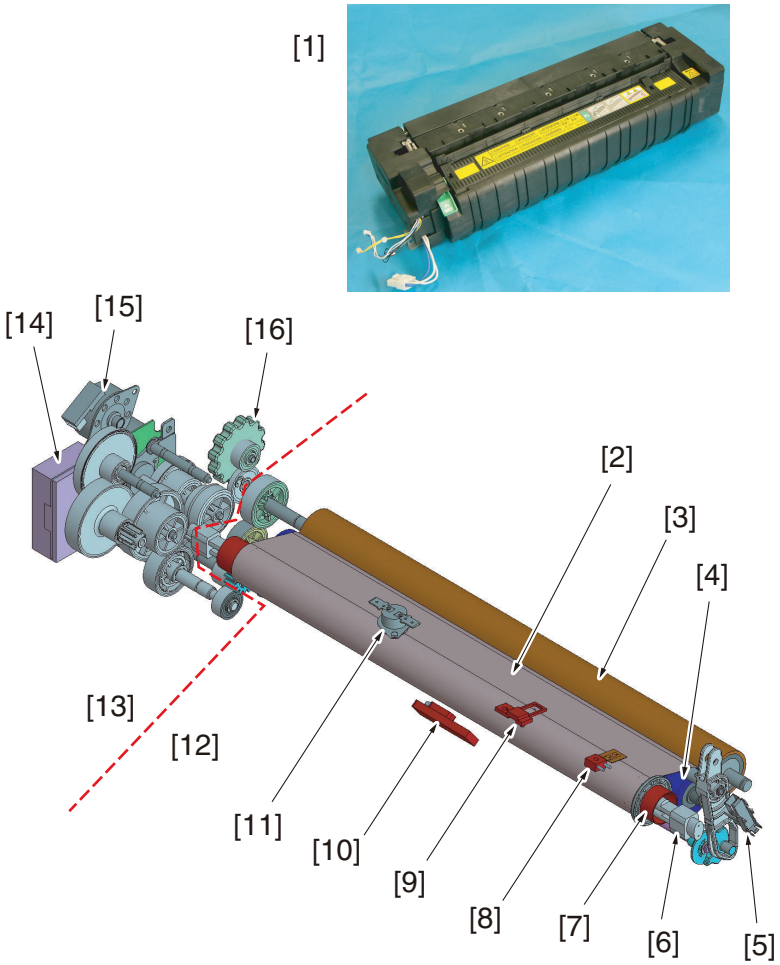

[1]	Fusing unit	[2]	Fusing belt
[3]	Pressure roller	[4]	Fusing roller
[5]	Fusing pressure home sensor (PS38)	[6]	Fusing heater lamp assy
[7]	Heating roller	[8]	Heating roller thermistor/1 (TH1)
[9]	Heating roller thermistor/2 (TH2)	[10]	Heating roller temperature sensor (TEMS)
[11]	Heating roller thermostat (TS1)	[12]	Fusing unit side
[13]	Main body side	[14]	Fusing motor (M3)
[15]	Fusing pressure motor (M11)	[16]	Jam removal dial

14.2 Drive

14.2.1 Fusing section roller drive

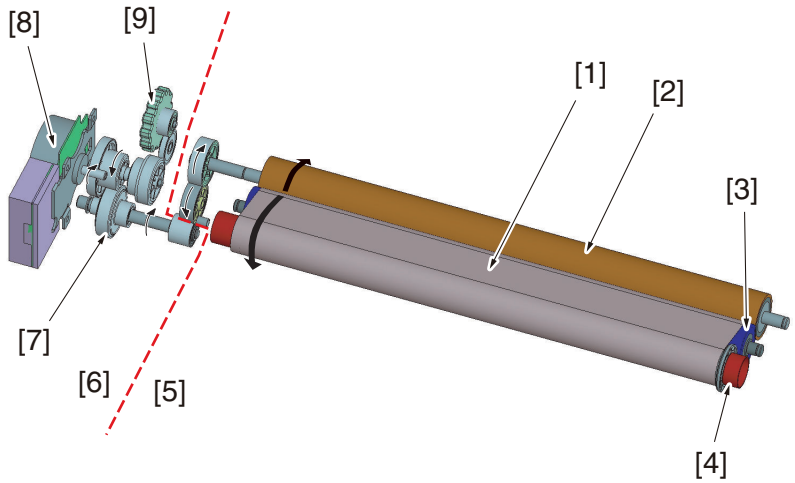

[1]	Fusing belt	[2]	Pressure roller
[3]	Fusing roller	[4]	Heating roller
[5]	Fusing unit side	[6]	Main body side
[7]	Fusing drive release gear	[8]	Fusing motor (M3)
[9]	Jam removal dial	-	-

14.2.2 Pressure roller pressure drive

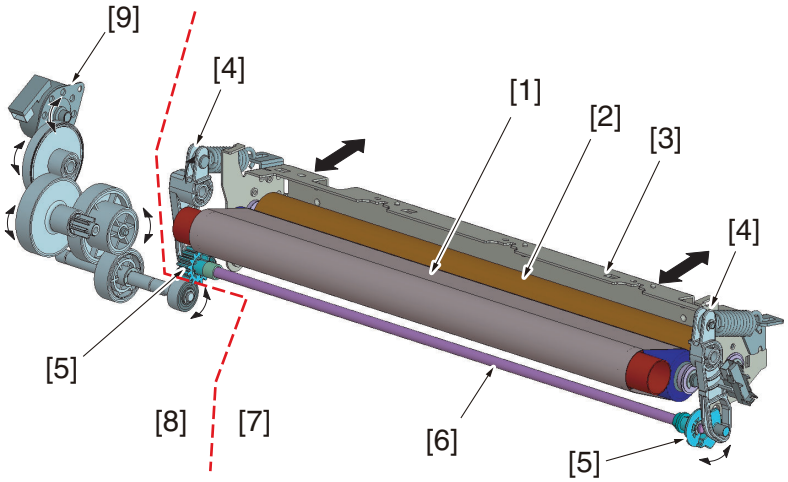

[1]	Fusing belt	[2]	Pressure roller
[3]	Pressure frame	[4]	Pressure lever
[5]	Pressure cam	[6]	Cam shaft
[7]	Fusing unit side	[8]	Main body side
[9]	Fusing pressure motor (M11)	-	-

14.3 Operation

14.3.1 Fusing drive release mechanism

- At the fusing drive position, transmit the driving force of the fusing motor to the pressure roller by a fusing drive release gear.
- Opening the right door places the fusing drive release lever in the fusing drive release position.
- With the fusing drive release lever in the fusing drive release position, the fusing drive release gear is disconnected from the fusing motor and, instead, connected to the jam removal dial.
- If a paper misfeed occurs in the fusing section, opening the right door allows the jam removal dial to be used for removing the misfed paper.

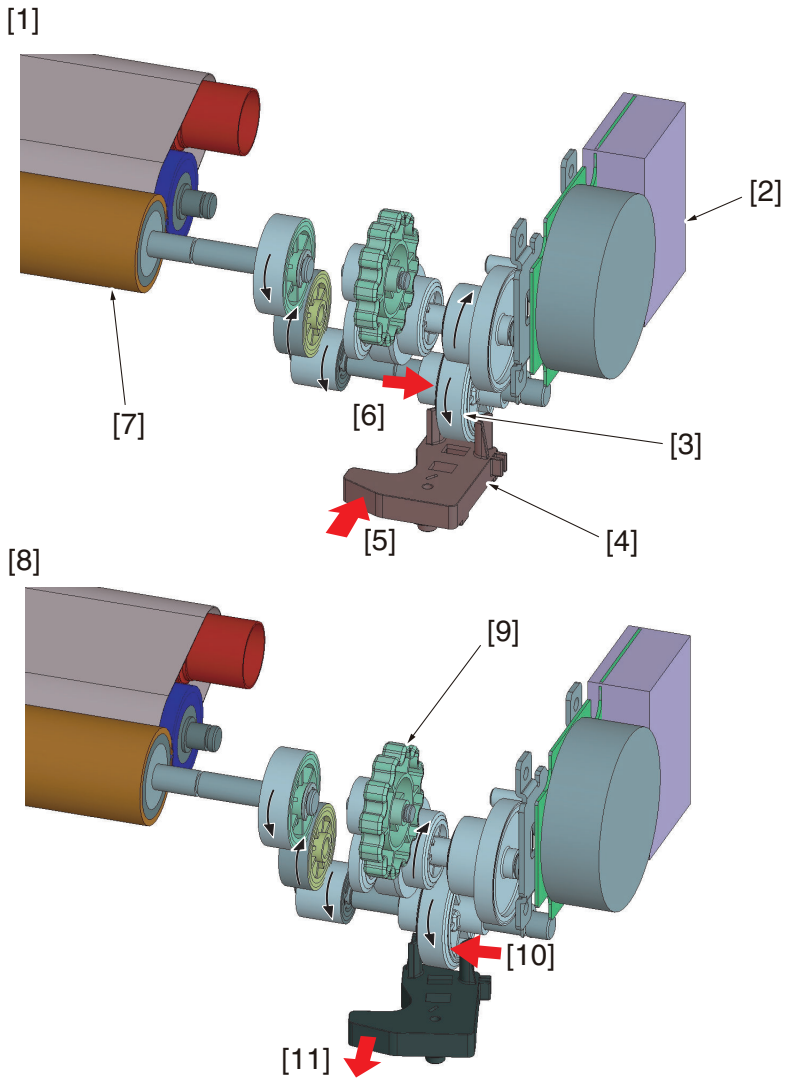

[1]	Fusing drive position	[2]	Fusing motor (M3)
[3]	Fusing drive release gear	[4]	Fusing drive release lever
[5]	Right door close position	[6]	Connected to fusing motor
[7]	Pressure roller	[8]	Fusing drive release position
[9]	Jam removal dial	[10]	Connected to jam removal dial
[11]	Right door open position	-	-

14.3.2 Fusing speed correction

(1) Fusing loop control

- To prevent double transferred images and brush effects that occur due to a difference in speed between paper transport during image transfer and fusing, a loop is formed in the paper between the 2nd transfer and fusing sections.
- The fusing loop sensor detects the length of the loop formed in the paper between the 2nd transfer section and the fusing roller.
- The fusing motor increases or decreases the fusing speed according to the length of loop in the paper, thereby ensuring that the length of loop falls within a predetermined range.

Fusing loop sensor	Loop amount	Fussing speed
Blocking	large	Speed-up
Unblocking	small	Slowdown

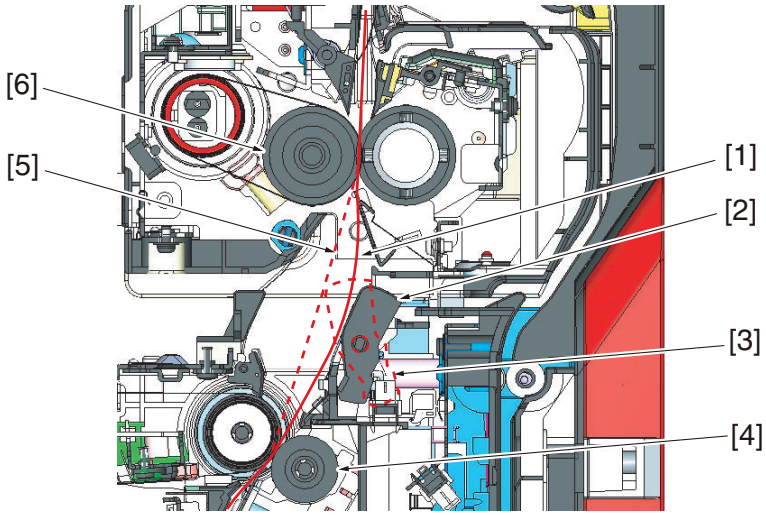

[1]	Loop length: large	[2]	Actuator
[3]	Fusing loop sensor (PS2)	[4]	2nd transfer roller
[5]	Loop length: small	[6]	Fusing roller

(a) Operation timing

- It starts controlling when the front-edge of the paper reaches to the predetermined position before the fusing roller.
- The fusing speed is decelerated so that a loop is formed in the paper between the 2nd transfer roller and the fusing roller.
- When the paper loop amount is large, the fusing loop sensor is blocked, and the fusing speed is increased.
- When the paper loop amount is small, the fusing loop sensor is unblocked, and the fusing speed is decreased.
- The fusing speed is increased or decreased as necessary to make sure that the paper loop amount falls within a predetermined range, thereby absorbing a difference between the fusing speed and image transfer speed.
- The fusing loop control will finish after the trailing of the paper passes the 2nd transfer roller.

(b) Fusing speed adjustment

- If double transferred images or brush effects occur due to inadequate paper loop before fusing, adjust the fusing speed using [Service Mode] -> [Machine] -> [Fusing transport speed].

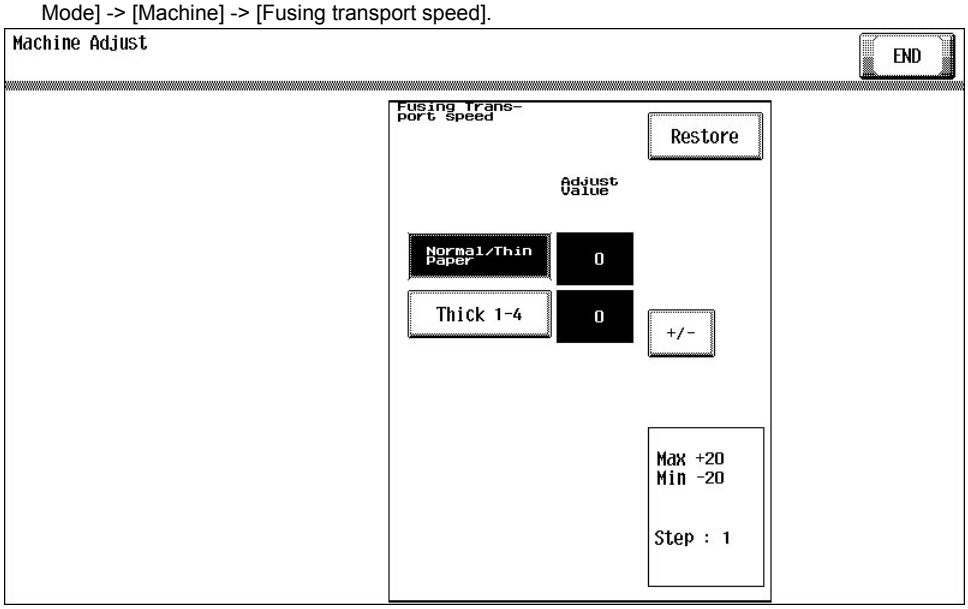

14.3.3 Fusing pressure/retraction control

- To maintain durability of the fusing belt, the fusing pressure roller is retracted *1 from the fusing belt during any time other than a print cycle. (The roller is, however, retracted during a print cycle using envelopes.)
  *1: The pressure roller does not completely retract from the fusing belt but is slightly pressed to the fusing belt.
- The fusing pressure roller is pressed against, and retracted from, the fusing belt by rotating the pressure cam through forward or backward rotation of the fusing pressure motor.
- The fusing pressure home sensor detects the pressure roller at its pressure position.
- The fusing pressure home sensor (PS38) detects the pressure roller at its release position.
- When there is no change in the output of the fusing pressure home sensor even after the lapse of a predetermined period of time after the fusing pressure motor has started rotating, the machine determines that there is a pressure/retraction fault and displays the “Trouble code C3101: Fusing roller separation failure” message.

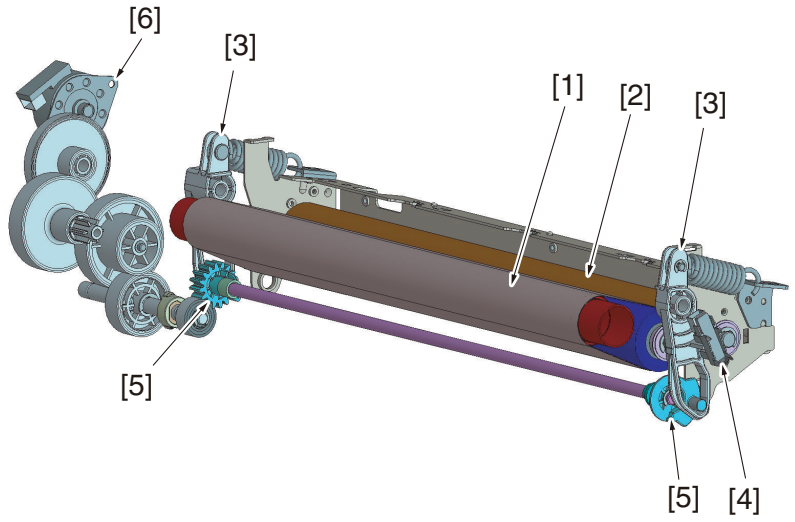

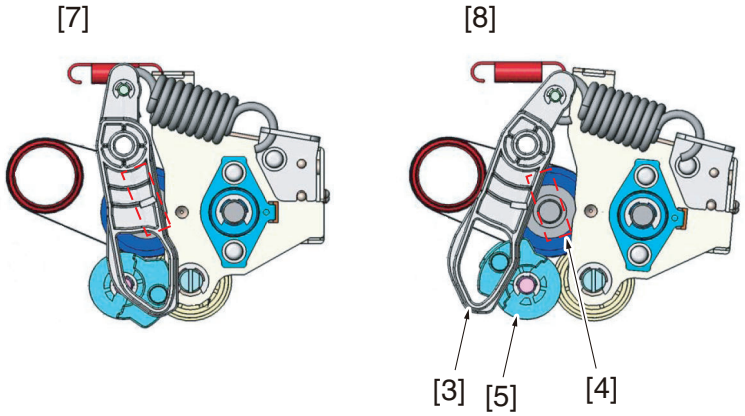

[1]	Fusing belt	[2]	Pressure roller
[3]	Pressure lever	[4]	Fusing pressure home sensor (PS38)
[5]	Pressure cam	[6]	Fusing pressure motor (M11)
[7]	Pressure position	[8]	Release position

(1) Operation timing

Conditions		Pressure roller position
Warm-up	At the start of a warm-up cycle	Pressure
Pre-standby	At the start of the pre-standby	Pressure
Standby	At the start of the standby	Retraction
Printing	For envelopes	Retraction
	For paper types other than envelopes	Pressure
When printing the multi jobs	When current printing is for other than envelopes and the next job is for the envelopes.	Pressure -> Retraction *
	When current printing is for the envelopes and the next job is for other than envelopes.	Retraction -> Pressure *
Energy save mode (lower power mode, sleep mode)		Retraction
When a malfunction or misfeed occurs		Retraction
When the fusing heater lamp is turned OFF (a door opened, a malfunction occurs, or other factors.)		Stop

- *: Pressure/retraction will be conducted after the currently printed paper passes between the fusing belt and the pressure roller. The timing for the next paper to be fed will be delayed during the pressure/retraction and keep the certain period of time between feeding the papers.

14.3.4 Fusing paper transport control

- The 2nd transfer roller transports paper onto the fusing unit.
- The fusing unit uses the fusing motor to drive the fusing pressure roller, thereby transporting paper onto the exit/reverse section.
- Fusing motor speed control is completed before the paper enters the fusing unit.
- The paper fed into the exit/reverse section is detected by the paper exit sensor before being transported by the paper exit roller.
- The fusing motor is deenergized after the last sheet of paper is fed into the finisher or out into the exit tray.

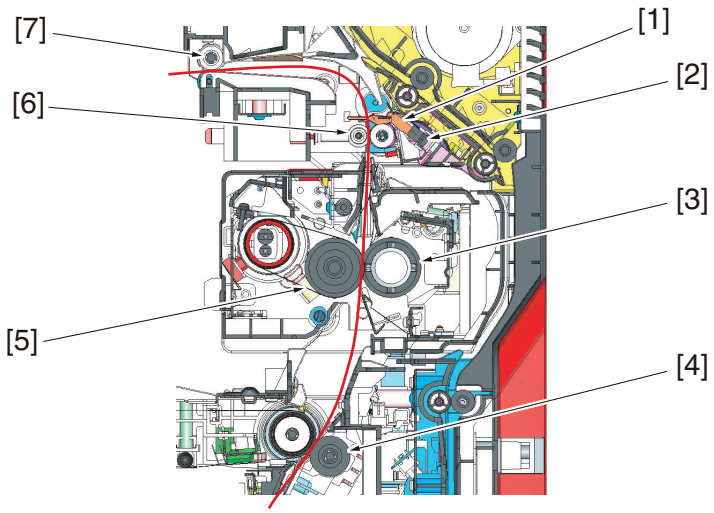

[1]	Actuator	[2]	Paper exit sensor (PS3)
[3]	Pressure roller	[4]	2nd transfer roller
[5]	Fusing roller	[6]	Exit tray front roller
[7]	Exit roller	-	-

14.3.5 Paper separation mechanism

- Paper separator claws are provided on the fusing pressure roller side and the fusing belt side in order to separate the sheet of paper reliably after the fusing process.
- Three contact type paper separator claws are installed on the fusing pressure roller side.
- Five noncontact type paper separator claws are installed on the fusing belt side.

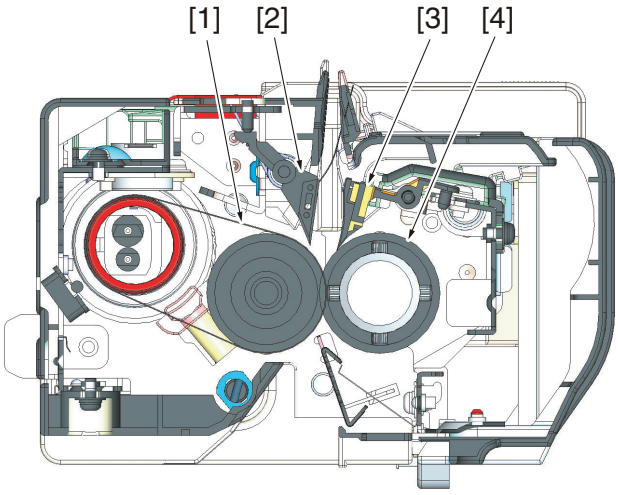

[1]	Fusing belt	[2]	Paper separator claws (noncontact type)
[3]	Paper separator claws (contact type)	[4]	Pressure roller

14.3.6 Fusing temperature control

- Fusing temperature control uses the heating roller temperature sensor and the heating roller thermistor that detect the surface temperature of the fusing belt to turn ON or OFF the fusing heater lamp as necessary.
  The fusing heater lamp when turned ON heats the fusing belt to a set temperature.

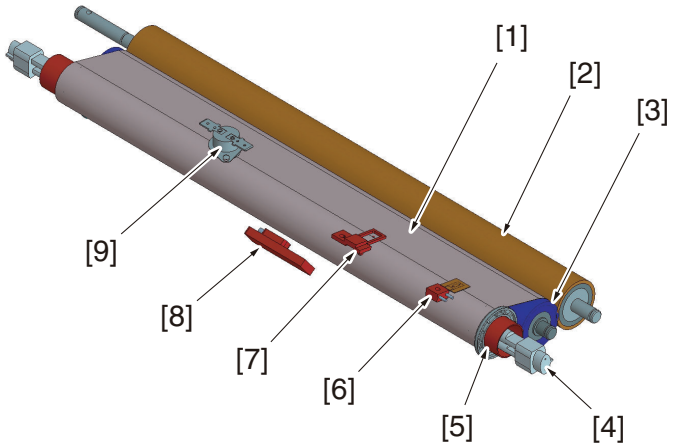

[1]	Fusing belt	[2]	Pressure roller
[3]	Fusing roller	[4]	Fusing heater lamp assy
[5]	Heating roller	[6]	Heating roller thermistor/1 (TH1)
[7]	Heating roller thermistor/2 (TH2)	[8]	Heating roller temperature sensor (TEMS)
[9]	Heating roller thermostat (TS1)	-	-

(1) Fusing heater lamp

- The heating roller contains a fusing heater lamp assy in it. The fusing heater lamp turns ON to generate heat, which heats the heating roller and fusing belt.
- The fusing heater lamp consists of two heaters, each having a unique heating range different from each other.
  - The fusing heater lamp/1 (long) uniformly heats the entire area of the heating roller
  - The fusing heater lamp/2 (short) heats only the central portion of the heating roller.
- The fusing heater lamp is turned ON or OFF according to the width of the paper and the surface temperature of the fusing belt.
  - For a paper width of 209 mm or less, the fusing heater lamp/2 is used to heat the central portion.
  - For a paper width exceeding 209 mm, the surface temperature of the fusing belt is measured and the fusing heater lamp/1 and the fusing heater lamp/2 are alternately turned ON.

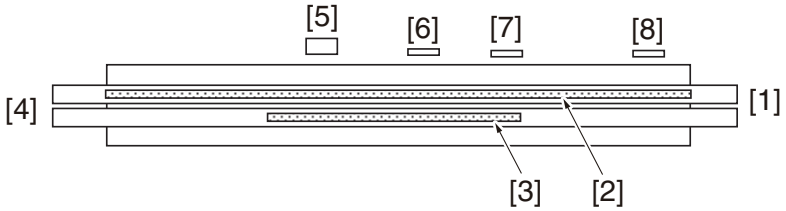

[1]	Front of machine	[2]	Fusing heater lamp/1 (FH1)
[3]	Fusing heater lamp/2 (FH2)	[4]	Rear of machine
[5]	Heating roller thermostat (TS1)	[6]	Heating roller temperature sensor (TEMS)
[7]	Heating roller thermistor/2 (TH2)	[8]	Heating roller thermistor/1 (TH1)

(2) Temperature control chart

*An example when a machine is warmed up under a normal ambient condition

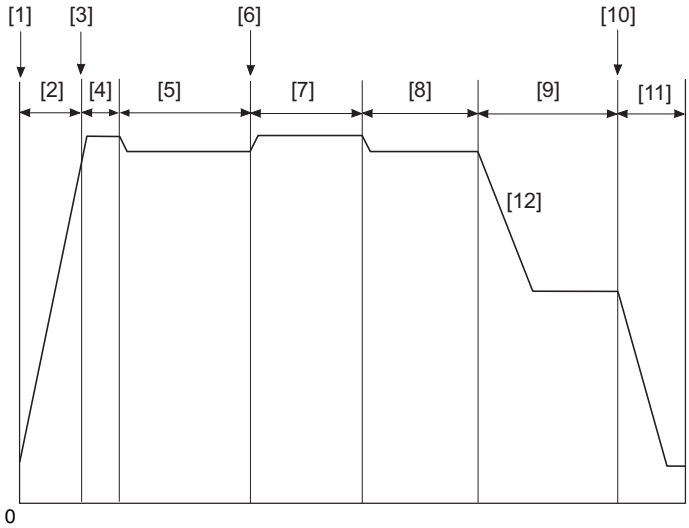

[1]	Main power switch ON	[2]	Warm-up control
[3]	Warm-up completed	[4]	Pre-standby control
[5]	Standby control (including a countermeasure against overshoot)	[6]	Print request
[7]	Print control	[8]	Standby
[9]	Low power mode	[10]	Entry in sleep mode
[11]	In sleep state	[12]	Fusing belt temperature

(3) Fusing temperature control during warm-up

- To prevent image fixability from being degraded due to environmental changes when the main power switch is turned ON, three different warm-up modes are incorporated for fusing temperature control.
- The warm-up mode is performed “at low temperatures”, “at ordinary temperatures”, or “under high humidity condition”.
- In the warm-up mode under high humidity condition, the warm-up time is extended to prevent paper from curling and the difference in temperature between the fusing belt and fusing pressure roller is minimized.
- When the temperature of the fusing belt reaches the warm-up completion temperature, control is passed onto the pre-standby process.

Warm up mode	Environment	
	Machine interior Warm up time temperature	Machine interior humidity (absolute humidity *1)
Warm-up at low temperatures	18°C or less	Not judged by absolute humidity
Warm-up at ordinary temperatures	More than 18°C to 32°C or less	Less than a predetermined value
Warm-up under high humidity condition	More than 32°C	Predetermined value or more

- *1: Absolute humidity: water content contained in the air (1 m^3) as steam regardless of the temperature

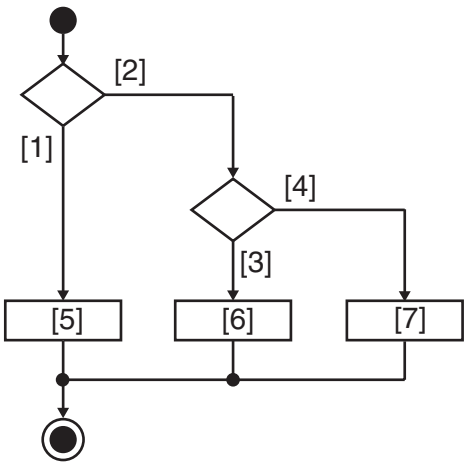

[1]	Machine interior temperature 18°C or less	[2]	Machine interior temperature exceeding 18°C
[3]	Absolute humidity, specified value or more	[4]	Absolute humidity, less than the specified value

[5]	Warm-up at low temperatures	[6]	Warm-up under high humidity condition
[7]	Warm-up at ordinary temperatures	-	-

(4) Temperature control during pre-standby

- After the warm-up completion temperature is reached, control is then passed onto the pre-standby process.
- The temperature control in the pre-standby state turns ON or OFF the fusing heater lamp as necessary in order to maintain the fusing belt temperature at a level that enables printing.
- A print job, when received during the pre-standby state, can be started without waiting.

(5) Temperature control during stand-by

- If no print request is received after the temperature control in the pre-standby state is started, control is passed onto the standby process.
- The temperature control in the standby state maintains the fusing belt temperature at a level lower than the temperature that enables printing.
- The control is intended to shorten time it takes the temperature to reach the printable level when a print request is received.
- An overshoot preventive process may be performed before control is passed onto the temperature control in the standby state.
- For a 30-min. period following the start of the standby process, the fusing motor alternately repeats rotation (at low speed) and stop cycles. After the 30-min. period, the fusing motor is deenergized.

(6) Temperature control during the print cycle

(a) Temperature control

- The machine enters a print state as it receives a print control and carries out a print cycle at a set temperature corresponding to the type of paper selected for the job.
- The fusing temperature is measured during the print cycle and temperature control suitable for the print condition is performed accordingly.

(b) Service Mode

- The machine has a fusing temperature adjustment function in order to prevent image fixability from being degraded depending on the type of paper and reduce such phenomena as paper curl, uneven wax, and offset.
- The fusing temperature can be varied using the setting made in “Machine/ Fusing Temperature” of the service mode.

Paper type	Heating side
Plain paper	- 20 °C to + 10 °C (step: 5 °C)
Thin paper	
Recycled paper	
OHP film	
Thick paper 1, 1+	
Thick paper 2	
Thick paper 3	
Thick paper 4	
Postcard	
Envelopes	- 5 °C to + 5 °C (step: 5 °C)

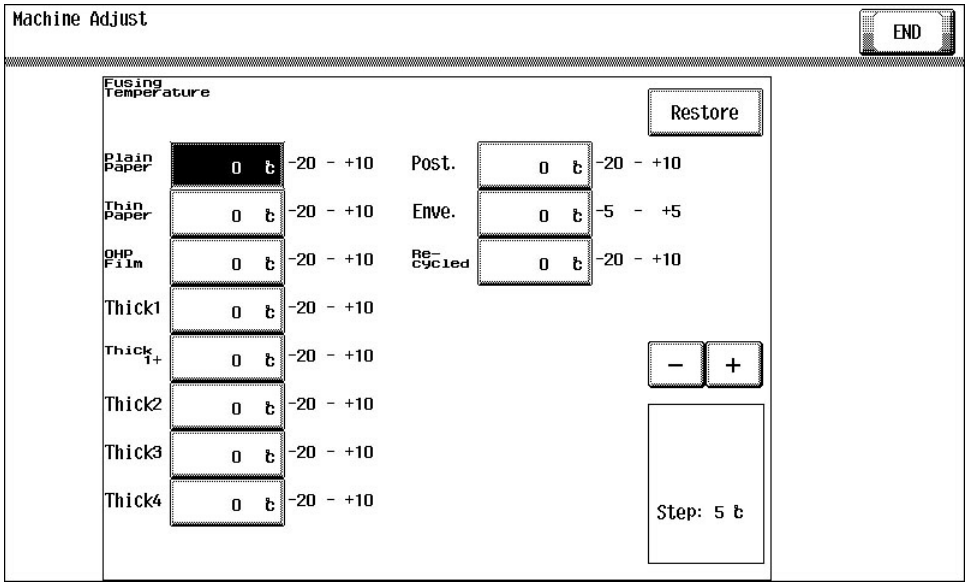

(7) Energy save mode

- The machine enters the energy save mode from any standby state to thereby reduce power consumption (TEC value).
- TEC value (typical electricity consumption): Energy saving criteria for copiers and printers to comply with the Energy Start program. Power consumption (kWh) at the office assuming operation of a product for one week (5 working days + 2 holidays) is calculated from the print speed and power consumption of the product.

- The energy save mode may be either the low power mode or sleep mode, whichever is enabled depending on the set conditions.

(a) Temperature control during low power mode

- To reduce power consumption in the low power mode, the surface temperature of the fusing belt is made lower than the controlled temperature under “temperature control during the standby state”.
- In the low power mode, the printable temperature can be recovered within a period of time shorter than warm-up.

(b) Temperature control during sleep mode

- To reduce power consumption during the sleep mode, power to the fusing heater lamp is shut down to stop heating the fusing belt.
- If the fusing belt temperature is decreased to room temperature, the printable temperature can be recovered within the same period of time as that of warm-up.

(8) Fusing-related control

- The following types of control are available as they relate to fusing temperature:
  - In Service Mode, “System 1/Change Warm Up Time” and “Machine/Heater Control Level”
  - In enhanced security, “Engine FW Dip SW/No. 5 PPM control (high humidity environment mode) prohibited”

(a) Change Warm Up Time

With Change Warm Up Time, a different type of control during the warm-up cycle is performed depending on the set mode.

- Mode 1: Default setting; the warm-up time during the print is the shortest.
- Mode 2: The warm-up time of the specifications value is set.
- Mode 3: Print productivity is reduced through PPM control in order to prevent paper from curling immediately following the warm-up cycle. The specifications value is set for the warm-up time.
- Mode 4: The warm-up time is extended to thereby heat the fusing unit, so that the paper can be prevented from curling immediately following the warm-up cycle. The warm-up time is 65 sec. or less.
- Following are characteristics of each of these modes.

Warm-up	Advantages	Disadvantages
Mode 1	Shortest warm-up time.	Concern about occurrence of curl under high humidity environment
Mode 2	The specifications values are set for the warm-up time.	Concern about occurrence of curl under high humidity environment
Mode 3	• The specifications values are set for the warm-up time. • Reduced chances of curl occurring under normal environment.	• Reduced productivity immediately following warm-up • Concern about occurrence of curl under high humidity environment
Mode 4	Reduced occurrence of curl	Long warm-up time (65 sec. or less)

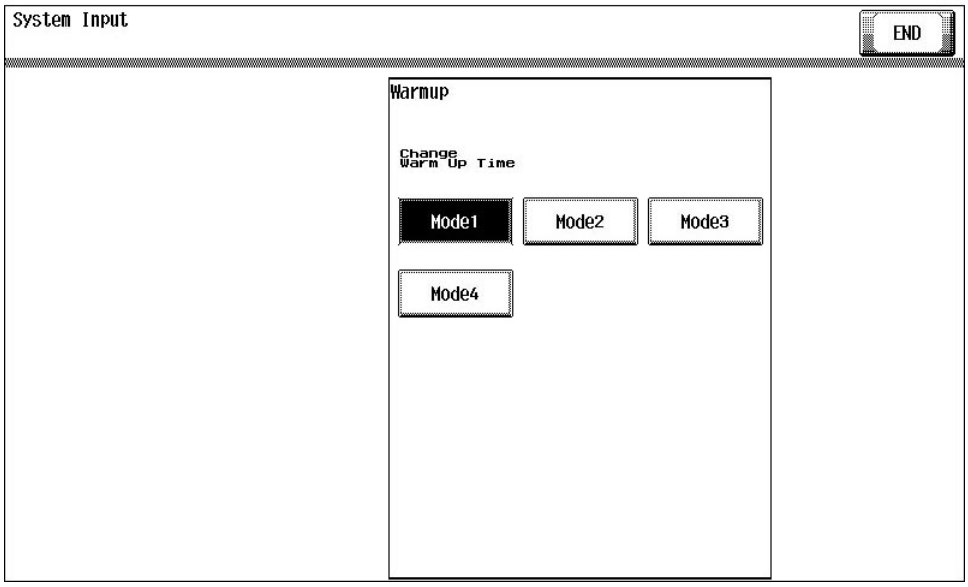

(b) High humidity environment mode prohibited choice

The high humidity environment mode prohibited choice is used to shorten the warm-up time under high humidity environment.

- ON: Shortens the warm-up time under high humidity environment, but more chance of occurrence of paper curl
- OFF: Default setting; Longer warm-up time, but no occurrence of curl even under high humidity environment

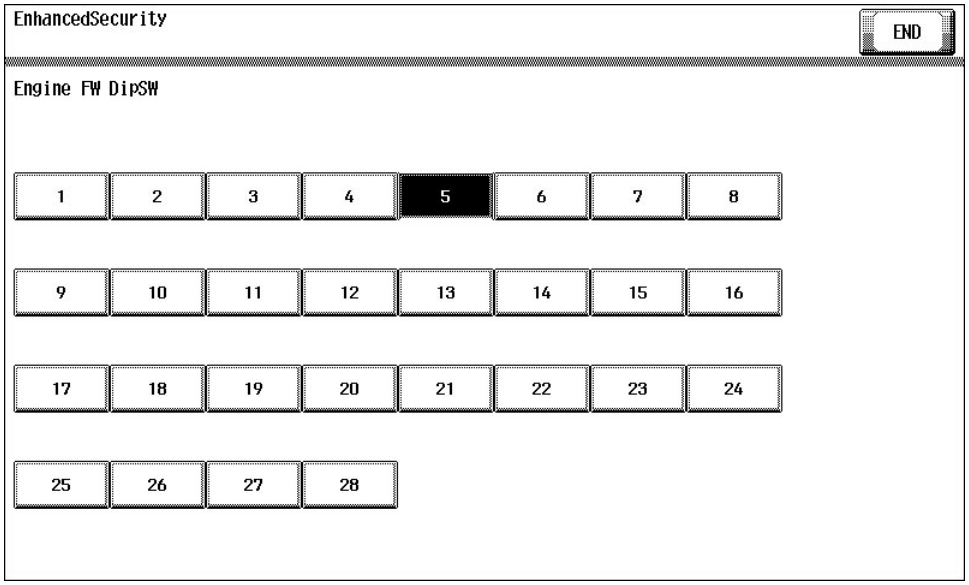

(c) Heater Control Level

The supplied electricity is controlled so as to limit flickering of a fluorescent lamp connected to the power source from which the machine derives its power, the flickering otherwise occurring when the fusing heater lamp is turned ON and OFF.

- When the fluorescent lamp flickers, reduce the level to a smaller number. E.g.: Level 2 -> 1
- If the DC power source produces noise, increase the level to a larger number. E.g.: Level 2 -> 3

NOTE

- **Reducing the level can cause the DC power source to produce noise, and increasing the level can cause the fluorescent lamp to flicker.**
  Whenever changing the level, make sure that the newly set level does not result in the fluorescent lamp flickering or DC power source producing a lot of noise.

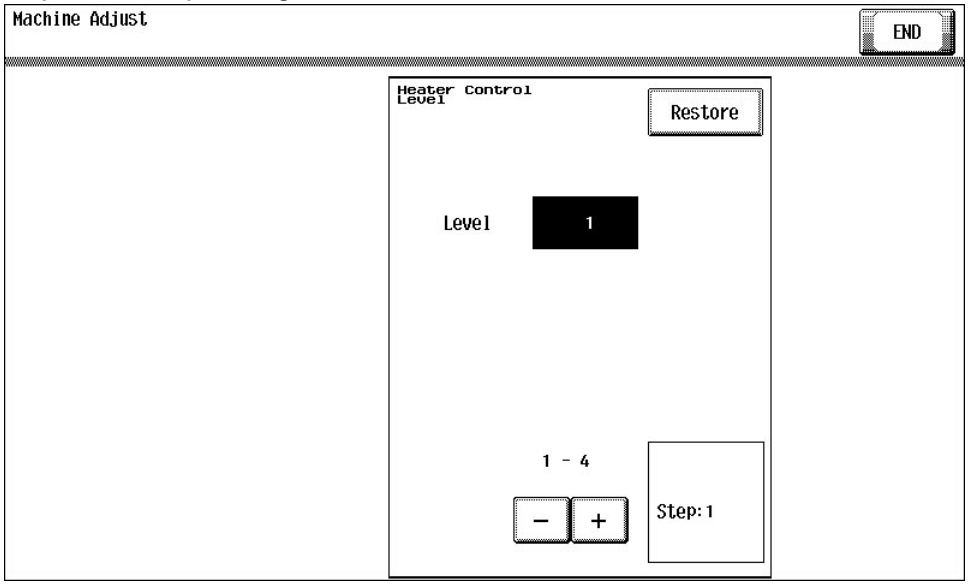

14.3.7 Protection from abnormal temperatures

(1) First approach: software protection

- If the heating roller temperature sensor detects a predetermined temperature or more continuously, the temperature is determined to be abnormally high and a “trouble code C3725: Fusing abnormally high temperature detection (Main of the heating side)” will be displayed.
- If the heating roller thermistor/1 detects a predetermined temperature or more continuously, the temperature is determined to be abnormally high and a “trouble code C3722: Fusing abnormally high temperature detection (Edge of the heating side)” will be displayed.
- If the heating roller thermistor/2 detects a predetermined temperature or more continuously, the temperature is determined to be abnormally high and a “trouble code C3726: Fusing abnormally high temperature detection (Center of the heating side)” will be displayed.
- When the trouble code is displayed, printing will be prohibited.

(2) Second approach: hardware protection

- A different protection is provided when the CPU overruns, becoming unable to detect the malfunction of an abnormally high temperature. If the heating roller temperature sensor detects an abnormal temperature, the heater relay of the DC power supply is turned OFF through the printer control board. Power supply to the fusing heater lamp is then shut down.
- When the hardware circuit in the DC power unit detects the heater relay being OFF, the temperature is judged to be abnormally high. Trouble code C3725: Fusing abnormally high temperature detection (Main of the heating side) will be displayed.

- Through these control procedures, the power supply to the heater lamps can be shut down before the thermostat is activated. It thereby suppresses damage to the fusing unit itself.

(3) Third approach: thermostat protection

- If detection of the abnormally high temperature through approaches 1 and 2 above is not possible due to a defective the heating roller temperature sensor, heating roller thermistor or other reason, the thermostat comes into play to shut down the power supply to the heater lamp.

14.3.8 Fusing PPM control

(1) PPM control

- To achieve the intended level of fixability of printed images, the PPM control reduces the number of printed pages per minute by widening the distance between sheets of paper.

PPM mode	Control execution conditions	Purpose	Specific controls	Print productivity *1
Low temperature environment mode	Room temperature at the start of the print cycle is 18°C or less	To achieve the intended level of fixability under low temperature environment	To prevent fixability from being degraded in a multi-print cycle, paper-to-paper distance is widened to thereby limit a decrease in the fusing temperature.	100%: default value 90% 80% 70% 60% 50%
Heating roller end temperature rise suppression mode	Print request is received for paper with a paper width of 209 mm or less Temperature of the heating roller ends becomes a predetermined value or more	To suppress inordinate rise in temperature on heating roller ends in a print cycle using paper of a small size	Paper-to-paper distance is widened in a multi-print cycle so as to prevent the temperature on ends of the heating roller from increasing, thereby promoting reduction in temperature.	100%: default value 90% 80% 70% 60% 50% 40% 30%
Reduced power supply mode	Only an insufficient power is supplied to the fusing heater lamp, resulting in a fusing temperature lower than a predetermined value	To achieve the intended level of fixability under low power supply condition	To prevent fixability from being degraded in a multi-print cycle, paper-to-paper distance is widened to thereby limit a decrease in the fusing temperature.	70%: default value 50%
Thin paper mode	“100%” is selected for “PPM Control Choice” of the service mode	To increase the print productivity of thin paper and recycled paper. To increase productivity during printing using thin paper. *The choice of 100% may result in paper curling.	Paper-to-paper distance is narrowed to thereby increase productivity.	100% 70%: default value *2

- *1: Exemplary calculation of print speed: If 36 ppm can be achieved at a print productivity of 100% on A4 plain paper, a change in print productivity to 90% results in 32.4 ppm.
- *2: For recycled paper, the print productivity will be set to 70% when “Mode 3” is selected for warm-up choice. For thin paper, the print productivity will be set to 70% regardless of the mode setting for warm-up choice.

14.3.9 Fusing unit new article detection

- The fusing unit is not provided with any new article detection mechanism. If the fusing unit is replaced with a new one, therefore, “New Release” of “Fusing Unit” must be performed in “Counter/ Life” of the service mode.

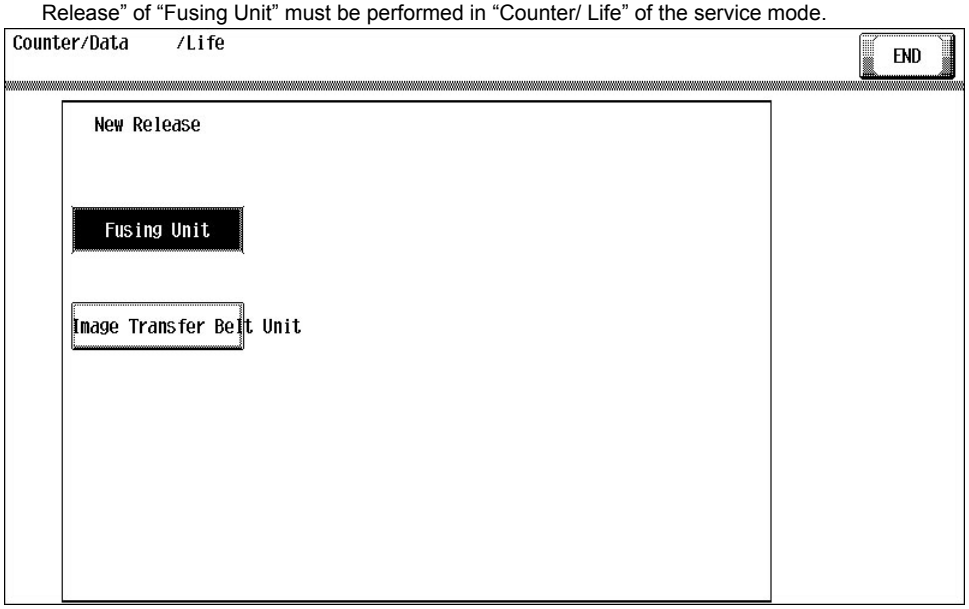

14.3.10 Fusing unit life detection

- On this machine, since the life stop and the life warning display are specified to [Off] by default, a warning display does not appear and the print job does not stop even when the life is reached.
  To confirm the life of each unit, check the counter data and configure the following settings. [Service Mode] -> [Counter/Data] -> [Life]
- Life related display default setting
  Life Display (Near Life Display Settings): Display
  Life Cycle Display Warning: Off
  Life Stop: Off
- The life counter of the fusing unit controls the life of the fusing unit.
- The counter value is recorded in the SSD board of the machine.

Controlled item	Counting unit
Fusing unit life counter	Passed the fusing unit

(1) Determination of life by the printed counter

- When the printed counter value reaches the threshold value, the machine determines that the fusing unit has entered a new state.

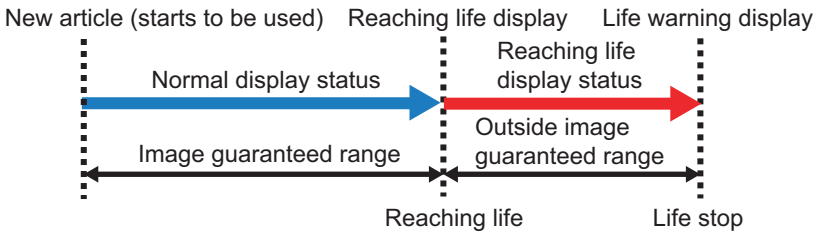

(2) Life determination timing

- The life determination control is performed under any of the following conditions:
  “Power is turned ON (with the front door or right door closed)”
  “The machine exits the sleep mode”
  “The front door or right door is opened and closed with the power switch in ON position”

(3) Life display (Display and settings for unit to be replaced)

(a) Life reaching display

- The life reaching screen appears when the count of the printed counter or the fusing rotation time counter reaches the reaching life threshold (print enabled, outside image guaranteed range).



NOTICE
- Life_display_example(DrumUnit).pdf

(b) Reaching life display settings

- On this machine, since the reaching life display is specified to [Display] by default, a display appears when the life is reached.
  If necessary, configure the reaching life display settings.[Service Mode] -> [System 2] -> [Unit change] -> [Near Life Display Settings]

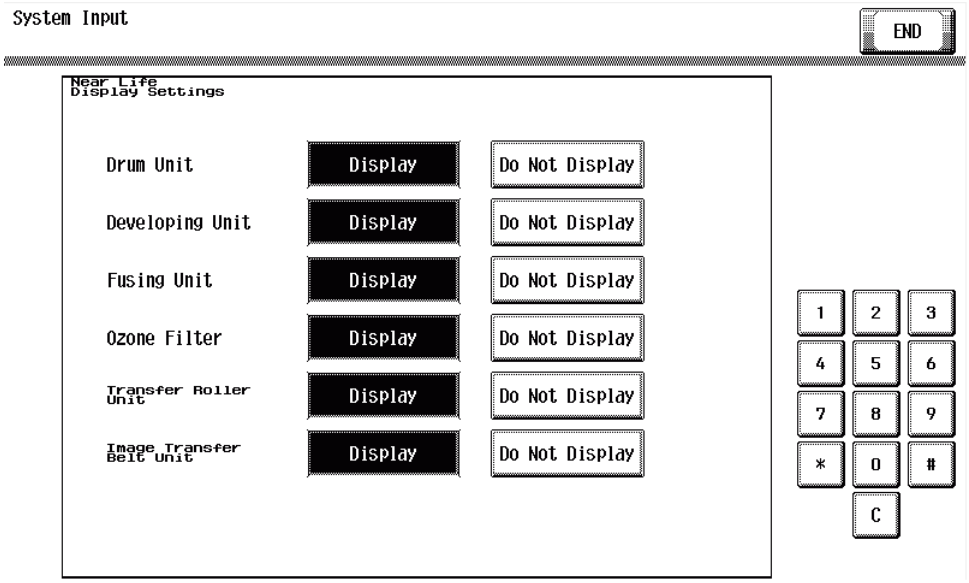

(c) Life cycle display warning

- The life stop screen appears when the count of the printed pages counter reaches the life stop threshold (print prohibited).

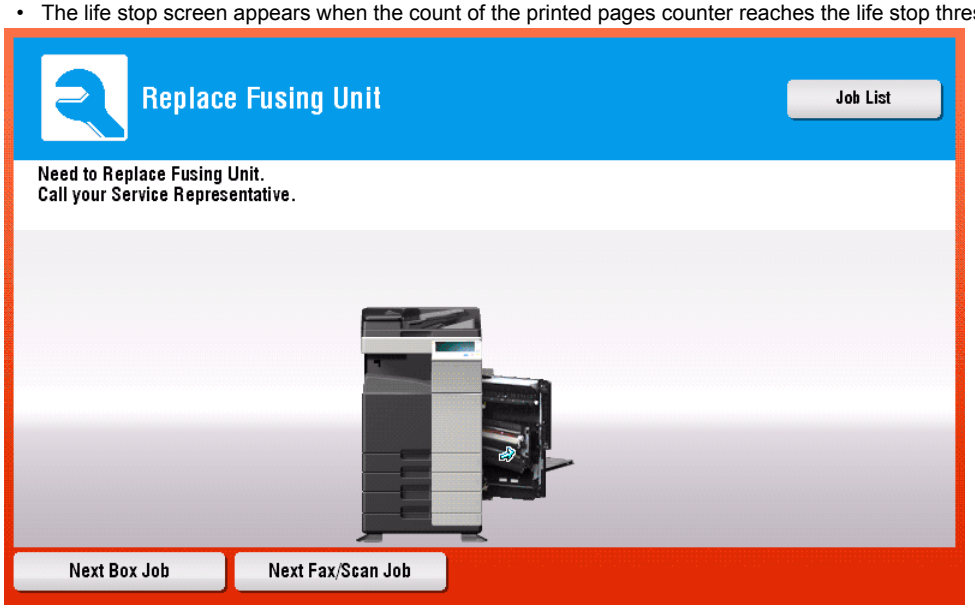

(d) Life cycle display warning and Life stop settings

- On this machine, since the life cycle display warning and the life stop are specified to [Off] by default, a warning display does not appear and the print job does not stop even when the life is reached.
- If necessary, configure the life stop settings. [Service Mode] -> [Enhanced Security] -> [Life Stop Setting]

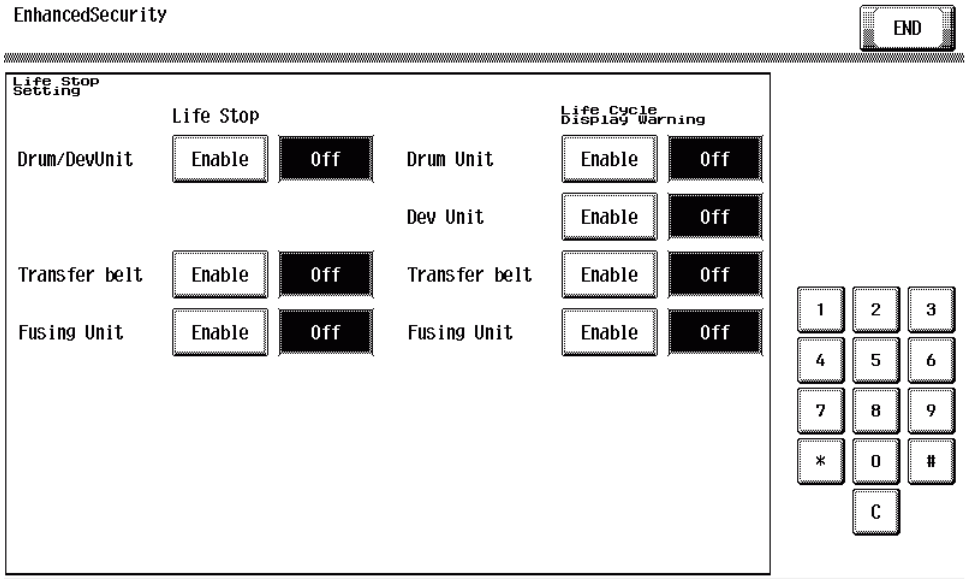

14.3.11 Fusing cooling control

(1) Fusing unit cooling

- The machine is used the toner bottle cooling fan for cooling the machine interior around the fusing unit.
- Outside air is drawn in through the rear portion of the machine to thereby blow air in an area between the fusing unit and toner bottle unit, thus cooling.

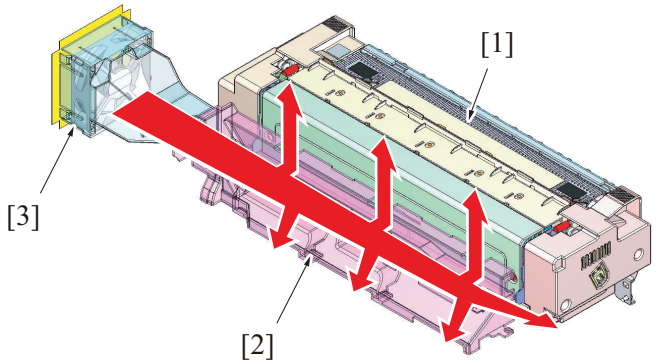

[1]	Fusing unit	[2]	Duct
[3]	Toner bottle cooling fan (FM4)	-	-

15. PAPER EXIT/REVERSE SECTION

15.1 Configuration

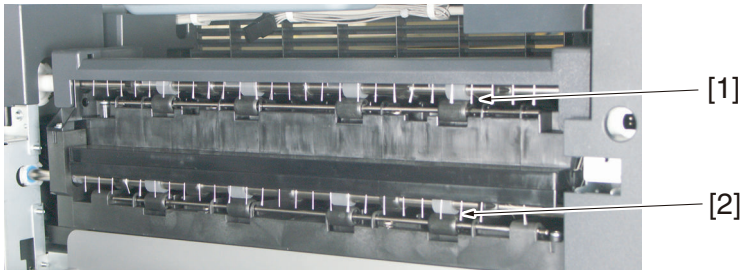

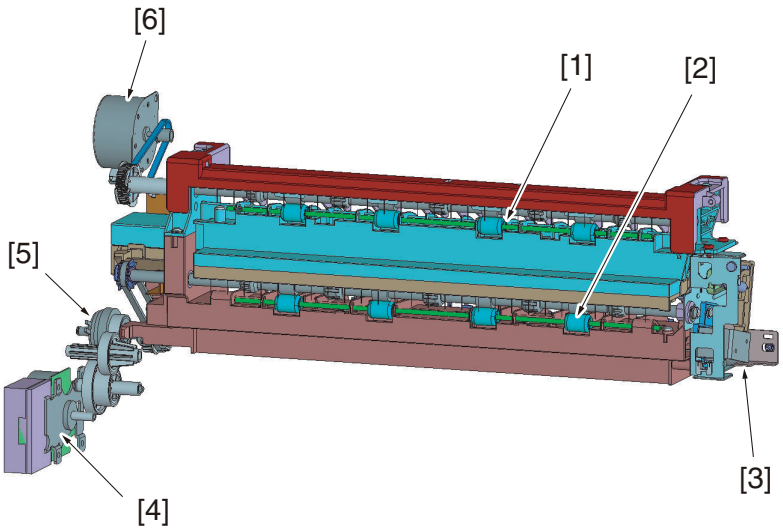

[1]	Reverse roller	[2]	Paper exit roller
[3]	Gate switch solenoid (SD3)	[4]	Fusing motor (M3)
[5]	Paper exit clutch (CL8)	[6]	Reverse motor (M4)

15.2 Drive

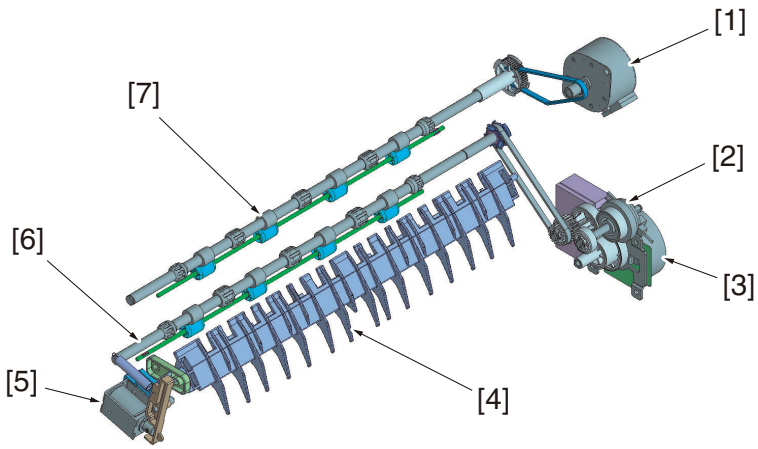

[1]	Reverse motor (M4)	[2]	Paper exit clutch (CL8)
[3]	Fusing motor (M3)	[4]	Paper exit/reverse switch gate
[5]	Gate switch solenoid (SD3)	[6]	Paper exit roller
[7]	Reverse roller	-	-

15.3 Operation

15.3.1 Transport control

(1) Paper exit by paper exit roller

- If the paper is fed out by way of the paper exit roller, the paper exit roller is rotated forward to transport the paper.
- The initial position of the paper exit/reverse switch gate establishes a paper path through the paper exit roller, so that its position is not changed.
- The paper exit roller is driven by controlling rotation of the fusing motor with the paper exit clutch.
- The paper exit clutch is energized at timing at which the leading edge of the paper enters the fusing unit.
- The paper exit clutch is deenergized when the paper is fed a predetermined distance after the paper exit roller after the paper exit sensor has detected the trailing edge of the paper.

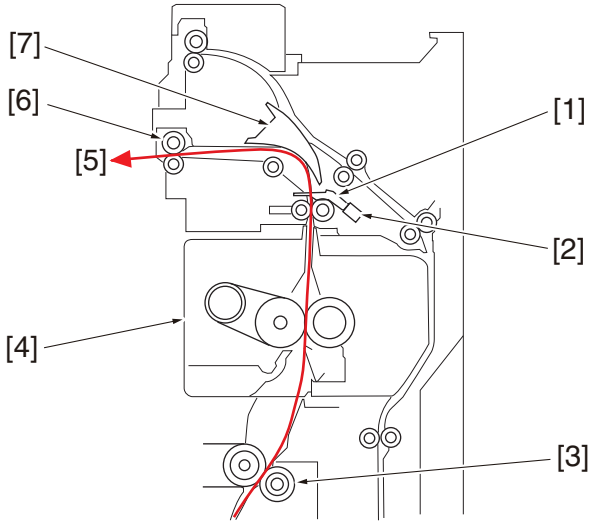

[1]	Actuator	[2]	Paper exit sensor (PS3)
[3]	2nd transfer roller	[4]	Fusing unit
[5]	Transported to paper exit tray or finisher	[6]	Paper exit roller
[7]	Paper exit/reverse switch gate: solenoid OFF position	-	-

(2) Paper exit by reverse roller

- The paper is fed from the reverse roller to the paper exit tray, only if FS-534/JS-506 capable of feeding paper out through the reverse roller is mounted.
- When the paper is to be fed out via the reverse roller, the reverse motor is rotated forward to thereby transport the paper.
- The gate switch solenoid is energized in order to establish a paper path through the reverse roller by changing the position of the paper exit/reverse switch gate.
- The reverse roller is started at timing at which the leading edge of the paper enters the paper exit/reverse section.
- The reverse roller is stopped when the paper is fed a predetermined distance after the reverse roller after the paper exit sensor has detected the trailing edge of the paper.

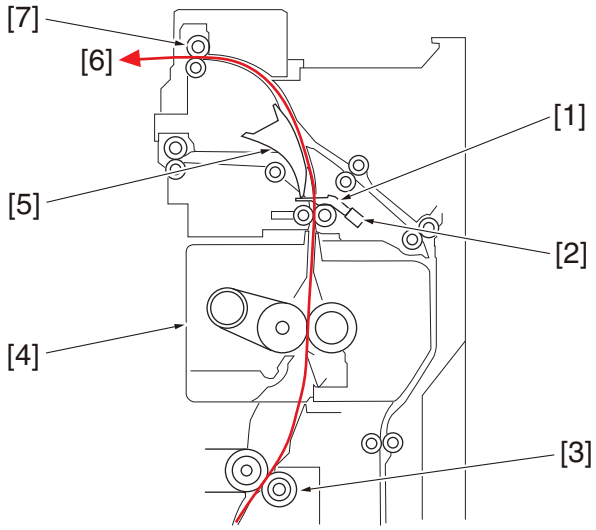

[1]	Actuator	[2]	Paper exit sensor (PS3)
[3]	2nd transfer roller	[4]	Fusing unit
[5]	Paper exit/reverse switch gate: solenoid ON position	[6]	Paper exit to paper exit tray

[7]	Reverse roller	-	-

(3) Duplex section transport

- When the paper is to be fed into the duplex section, the reverse roller is rotated forward to transport the paper to the reverse position and then rotated backward, thereby transporting the paper onto the duplex section.
- Until the paper is transported up to the reverse stop position, the gate switch solenoid is energized to place the paper exit/reverse switch gate in a position at which the paper path through the reverse roller is established.
- When the paper reaches the reverse stop position, the paper exit/reverse switch gate returns to its original position to thereby prevent the paper from moving backward into the fusing section.
- The reverse roller is started to rotate forward at timing at which the leading edge of the paper enters the paper exit/reverse section.
- The reverse roller is stopped from forward rotation at timing at which the paper reaches the reverse stop position after the paper exit sensor has detected the trailing edge of the paper.
- The reverse roller is started to rotate backward at timing at which the preceding paper moves past a predetermined position of the duplex section.
- The reverse roller is stopped from backward rotation at timing at which the trailing edge of the paper enters the duplex section.

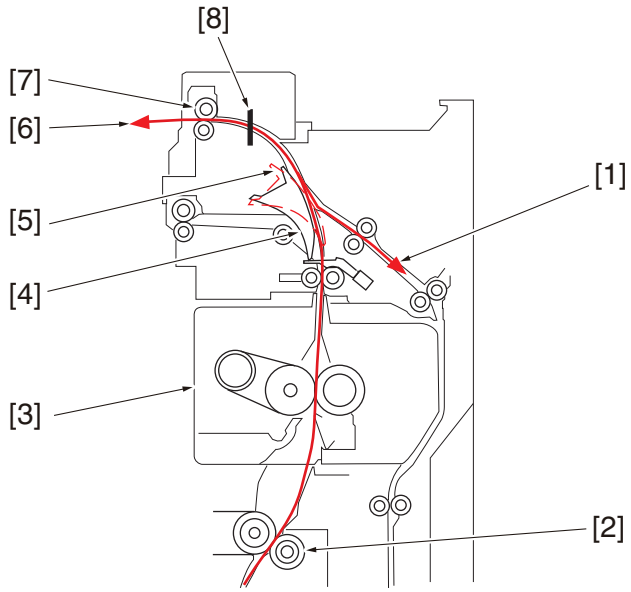

[1]	Transporting to duplex section	[2]	2nd transfer roller
[3]	Fusing unit	[4]	Paper exit/reverse switch gate: solenoid ON position
[5]	Paper exit/reverse switch gate: solenoid OFF position	[6]	Transporting to reverse stop position
[7]	Reverse roller	[8]	Reverse stop position

15.3.2 Exit paper cooling mechanism

(1) Paper exit/reverse section cooling

- The paper cooling fan cools the paper after fusing and the paper exit/reverse section.
- The paper cooling fan draws outside air through a rear portion of the machine and feeds the air through the duct to cool the paper exit path and reverse path.

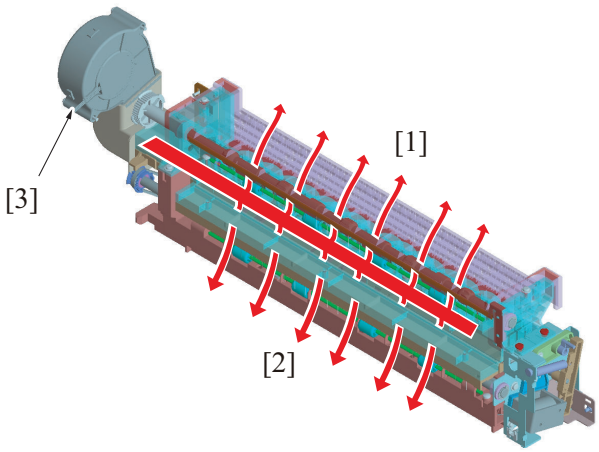

[1]	Blowing air to reverse roller path	[2]	Blowing air to paper exit roller path
[3]	Paper cooling fan (FM8)	-	-

16. DUPLEX SECTION

16.1 Configuration

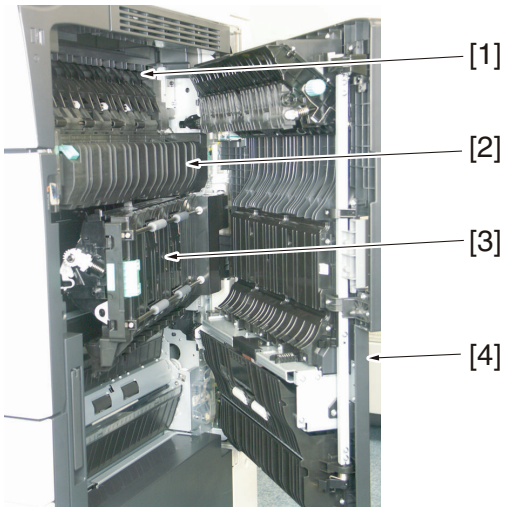

[1]	Paper exit/reverse switch gate	[2]	Fusing unit
[3]	Registration unit (Duplex section)	[4]	Right door

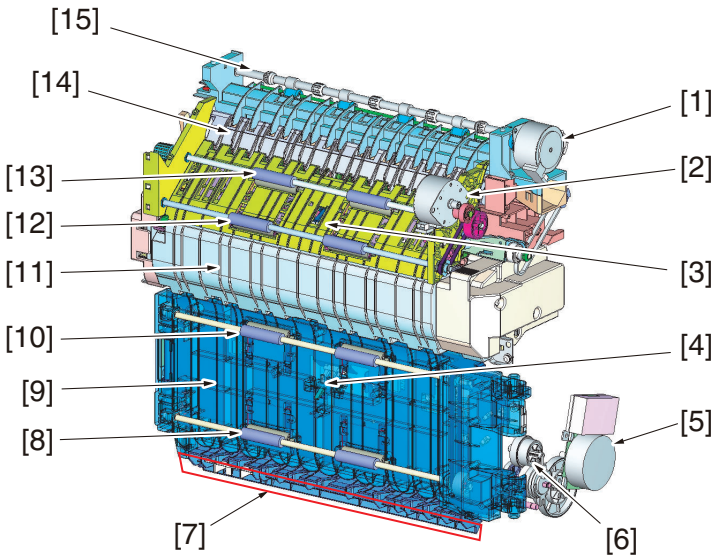

[1]	Reverse motor (M4)	[2]	ADU transport motor (M5)
[3]	ADU paper passage sensor/1 (PS40)	[4]	ADU paper passage sensor/2 (PS41)
[5]	Transport motor (M1)	[6]	ADU transport clutch (CL6)
[7]	Duplex pre-registration section	[8]	ADU transport roller/4
[9]	Registration unit (duplex section)	[10]	ADU transport roller/3
[11]	Fusing unit	[12]	ADU transport roller/2
[13]	ADU transport roller/1	[14]	Paper exit/reverse switch gate
[15]	Reverse roller	-	-

16.2 Drive

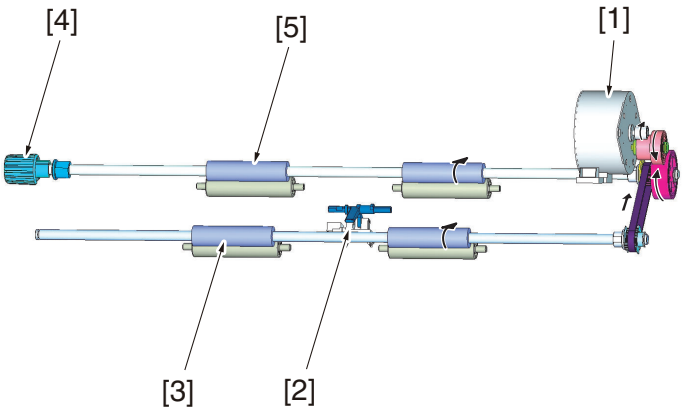

[1]	ADU transport motor (M5)	[2]	ADU paper passage sensor/1 (PS40)
[3]	ADU transport roller/2	[4]	Jam removal dial
[5]	ADU transport roller/1	-	-

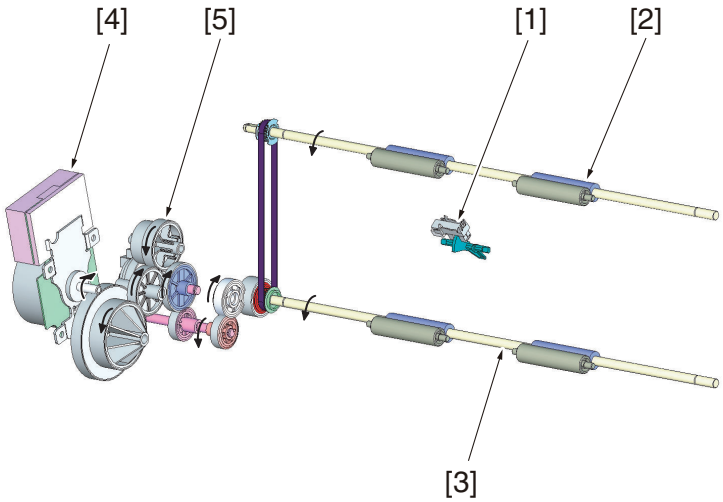

[1]	ADU paper passage sensor/2 (PS41)	[2]	ADU transport roller/3
[3]	ADU transport roller/4	[4]	Transport motor (M1)
[5]	ADU transport clutch (CL6)	-	-

16.3 Operation

16.3.1 Paper transport control

- In duplex transportation, the paper transported from the reverse roller is transported to the internal duplex section by the ADU transport roller/1 and ADU transport roller/2.
- In duplex pre-registration, the paper is conveyed to the registration roller at the vertical transport section by the ADU transport roller/3 and ADU transport roller/4.

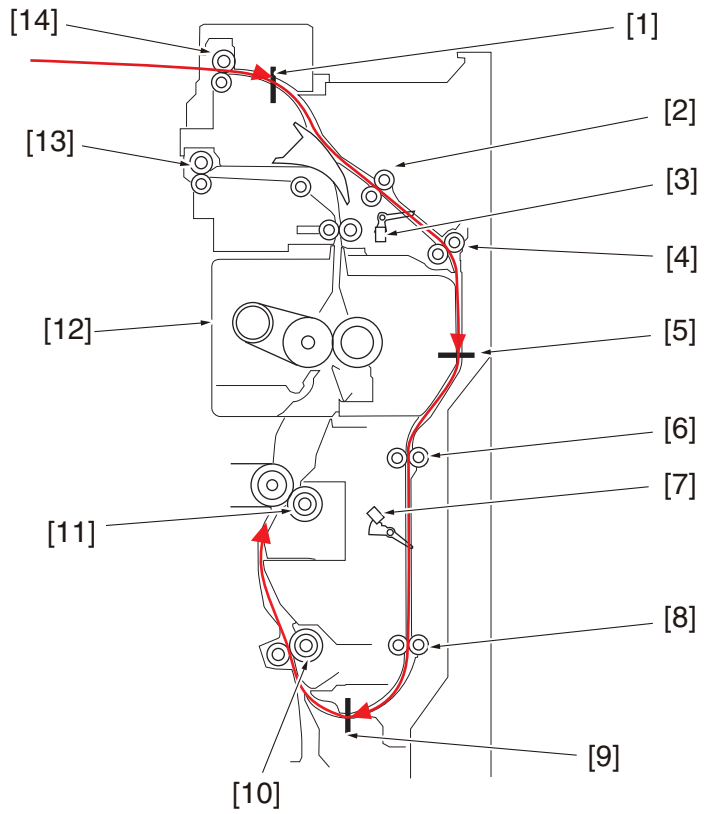

[1]	Stop position 1	[2]	ADU transport roller/1
[3]	ADU paper passage sensor/1 (PS40)	[4]	ADU transport roller/2
[5]	Stop position 2	[6]	ADU transport roller/3
[7]	ADU paper passage sensor/2 (PS41)	[8]	ADU transport roller/4
[9]	Stop position 3	[10]	Registration roller
[11]	2nd transfer roller	[12]	Fusing unit
[13]	Paper exit roller	[14]	Reverse roller

(1) Transport roller control

- The ADU transport motor drives the ADU transport roller/1 and ADU transport roller/2.
- The ADU transport roller/3 and ADU transport roller/4 are driven by controlling rotation of the transport motor with the ADU transport clutch.

(2) Paper entrance control

- The reverse motor at the paper exit/reverse section is deenergized to stop transport of the paper temporarily (stop position 1).
  When the condition for starting reverse into the duplex section is met, the reverse motor rotates backward to transport the paper into the duplex section.
- At the same time of backward rotation of the reverse motor, the ADU transport motor is energized and the ADU transport roller/1 and ADU transport roller/2 start rotating.
- The ADU paper passage sensor/1 located downstream of the ADU transport roller/1 detects the leading edge of the paper transported to the duplex section.
- If a preceding sheet of paper being transported through the duplex section is yet to reach a predetermined position downstream of the registration roller, the ADU transport motor is deenergized to stop transport of the paper temporarily. (stop position 2)
- When the advanced sheet of paper moves past the specified position, the ADU transport motor is energized to resume the transport of paper.
- If the ADU paper passage sensor/2 does not detect the leading edge of the paper even after the lapse of a predetermined period of time after the ADU paper passage sensor/1 has detected the leading edge of the paper, the machine determines that a paper misfeed occurs at the duplex transport part.

(3) Duplex paper feed control

- When the leading edge of the paper reaches the specified position, the ADU transport clutch is energized and the ADU transport roller/3 and ADU transport roller/4 start rotating.
- The ADU paper passage sensor/2 detects the leading edge of the paper transported from the ADU transport roller/3.
- When the paper moves past the ADU transport roller/4 and reaches the specified position, the ADU transport clutch is deenergized to stop the transport of the paper temporarily (stop position 3).
  If, in this case, the paper has a length of more than 286.3 mm in the sub scanning direction, the ADU transport motor is also deenergized.
- At predetermined paper feed timing, the ADU transport clutch is energized to resume the transport of the paper.
  The ADU transport motor is also energized if it has been deenergized.
- The paper is fed from the ADU transport roller/4 onto the registration roller at the vertical transport part.

16.3.2 Duplex circulation control

- The duplex circulation control is performed differently according to the sub scanning direction length of the paper.

Sub scanning direction paper length	Duplex circulation control
More than 458 mm	Can not print 2-sided
433 mm to 458 mm	One-sheet circulation operation
217 mm to 432 mm	Two-sheet circulation operation
216 mm or less	Three-sheet circulation operation

(1) One-sheet circulation operation

Operation 1

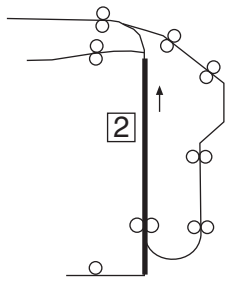

- One sheet of paper is supplied and the image of the second page is printed.

Operation 2

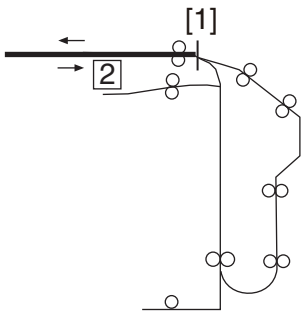

- After the paper transported to the paper exit/reverse section stops at the stop position 1 [1] (reverse roller), the reverse roller turns around to send the sheet to the duplex section (paper reversed).

Operation 3

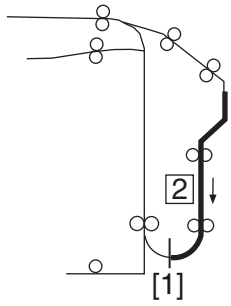

- The paper transported to the duplex section is transported onto, and stopped at the stop position 3 [1] (ADU transport roller/4).

Operation 4

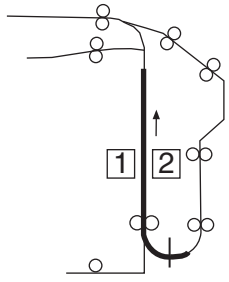

- The image of the first page is printed on the paper re-supplied from the duplex section.

Operation 5

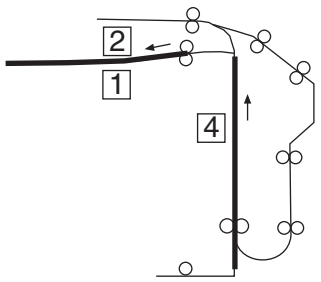

- The first sheet of the paper is fed out.
- The image of fourth page is printed on the second sheet.

- Steps 2 through 5 are repeated.

(a) Operation timing

One A4-size original for 2-sided printing

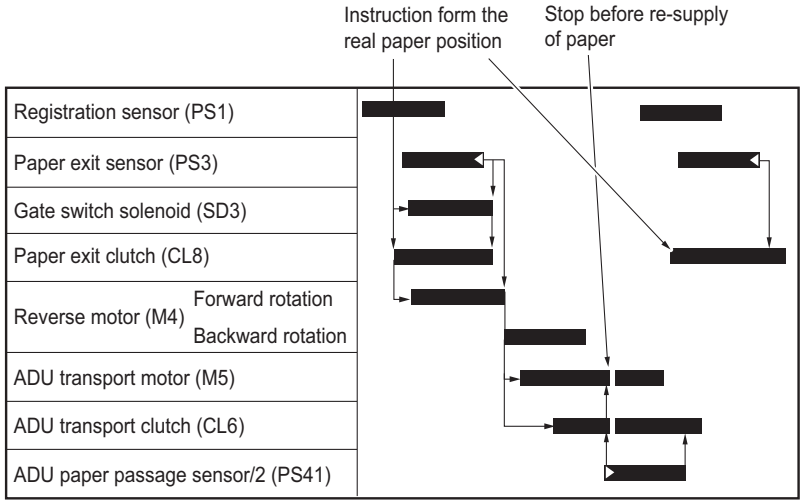

NOTE

- **Only the ADU transport clutch is energized, if the length of the paper to be taken up and fed into the duplex section is less than 291.8 mm.**

(2) Two-sheet circulation operation

Operation 1

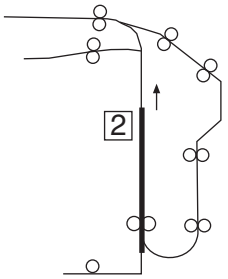

- The first sheet of paper is supplied and the image of the second page is printed.

Operation 2

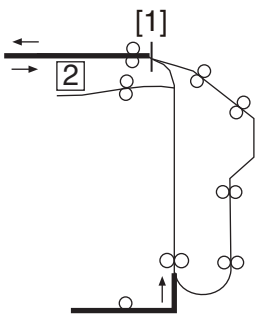

- After the first sheet of paper stops at the stop position 1 [1], the reverse roller turns around to send the sheet to the duplex section (paper reversed).
- The second sheet of paper is supplied.

Operation 3

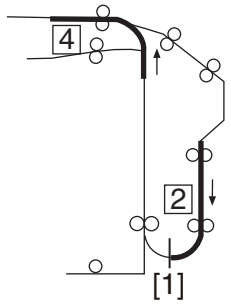

- The first sheet of the paper is sent trough the duplex section and stops at the stop position 3 [1] (ADU transport roller/4).
- The image of the fourth page is printed on the second sheet of paper.

Operation 4

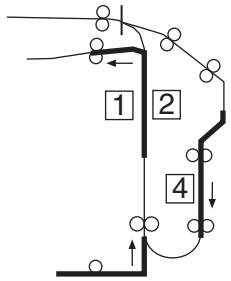

- The first sheet of the paper is re-supplied and an image of the first page is printed on.
- The second sheet of paper is reversed at the paper exit/reverse section and transported onto the duplex section.
- The third sheet of paper is supplied.

Operation 5

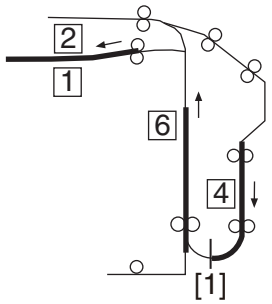

- The first sheet of paper is fed out.
- The second sheet of paper is transported onto, and stopped at stop position3 [1].
- The image of the sixth page is printed on the third sheet of paper.

Operation 6

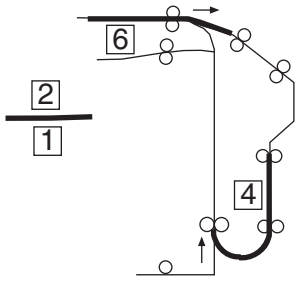

- The second sheet of the paper is re-supplied.
- The third sheet of paper is reversed at the paper exit/reverse section and transported onto the duplex section.

Operation 7

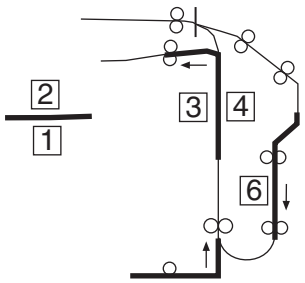

- The image of the third page is printed on the second sheet of paper.
- The third sheet of paper is transported in the duplex section.
- The fourth sheet of paper is supplied.

Operation 8

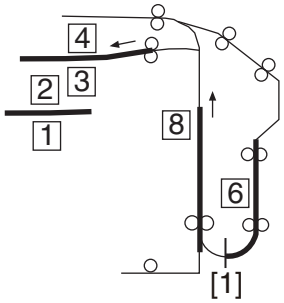

- The second sheet of the paper is fed out.
- The third sheet of the paper is stopped and waited at stop position 3 [1].
- The image of eighth page is printed on the fourth sheet of the paper.

- Steps 6 through 8 are repeated.

(3) Three-sheet circulation operation

Operation 1

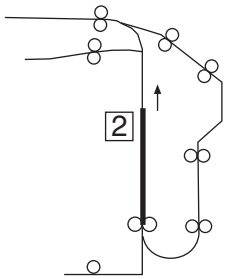

- The first sheet of paper is supplied and the image of the second page is printed.

Operation 2

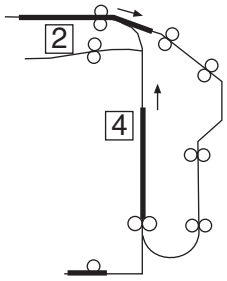

- The first sheet of paper is reversed at the paper exit/reverse section and transported onto the duplex section.
- The second sheet of paper is supplied and the image of the fourth page is printed.
- The third sheet of paper is supplied.

Operation 3

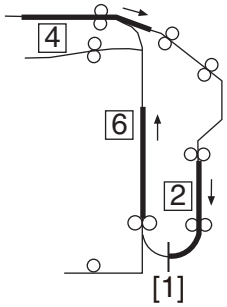

- The first sheet of the paper is transported onto, and stopped at, stop position 3 [1].
- The second sheet of paper is reversed at the paper exit/reverse section and transported onto the duplex part.
- The image of the sixth page is printed on the third sheet of paper.

Operation 4

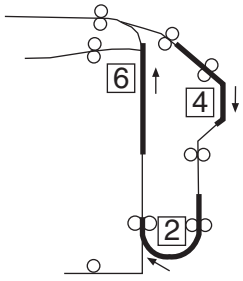

- The first sheet of paper is transported onto the vertical transport section.
- The second sheet of paper is transported into the duplex section.
- The third sheet of paper is transported onto the paper exit/reverse section.

Operation 5

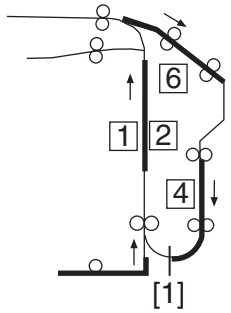

- The image of the first page is printed on the first sheet of paper.
- The second sheet of the paper is transported onto, and stopped at stop position 3 [1].
- The third sheet of paper is reversed at the paper exit/reverse section and transported onto the duplex section.
- The fourth sheet of paper is supplied.

Operation 6

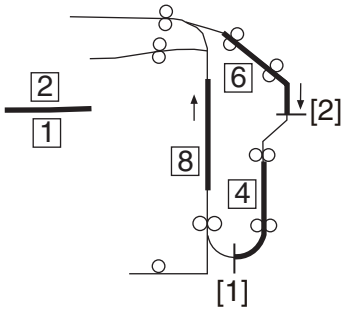

- The first sheet of paper is fed out.
- The second sheet of paper waits at stop position 3 [1].
- The third sheet of the paper is transported onto, and stopped at, stop position 2 [2] (ADU transport roller/2).
- The image of the eighth page is printed on the fourth sheet of paper.

Operation 7

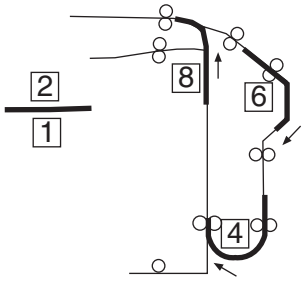

- The second sheet of paper is transported onto the vertical transport section.
- The third sheet of paper is transported into the duplex section.
- The fourth sheet of paper is transported onto the paper exit/ reverse section.

Operation 8

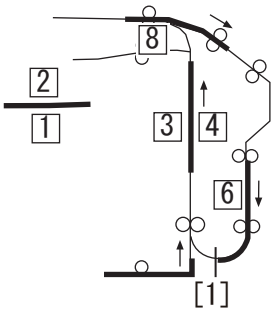

- The image of the third page is printed on the second sheet of paper.
- The third sheet of the paper is transported onto, and stopped at, stop position 3 [1].
- The fourth sheet of paper is reversed at the paper exit/reverse section and transported onto the duplex section.
- The fifth sheet of paper is supplied.

Operation 9

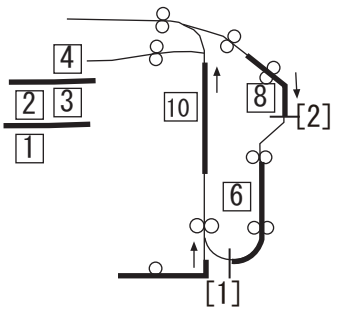

- The second sheet of paper is fed out.
- The third sheet of paper waits at stop position 3 [1].
- The fourth sheet of the paper is transported onto, and stopped at stop position 2 [2].
- The image of the tenth page is printed on the fifth sheet of paper.

Operation 10

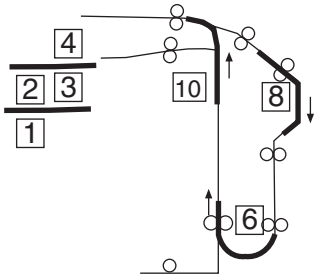

- Steps 8 through 10 are repeated.

- The third sheet of paper is transported onto the vertical transport section.
- The fourth sheet of paper is transported onto the duplex section.
- The fifth sheet of paper is transported onto the paper exit/reverse section.

17. IMAGE STABILIZATION CONTROL

17.1 Overview

- The machine provides the following image stabilization control to ensure stabilized copy image.

Purpose	Control	Control means
To stabilize image density To stabilize gradation	• IDC sensor adjustment control • Max. density adjustment control • LD intensity adjustment control • Gamma correction control	IDC sensor Temperature/humidity sensor
To stabilize toner density	* TCR control	TCR sensor
To stabilize image transfer	* Transfer output control 2nd transfer ATVC	Temperature/humidity sensor

- * An explanation is given of the control for each section.

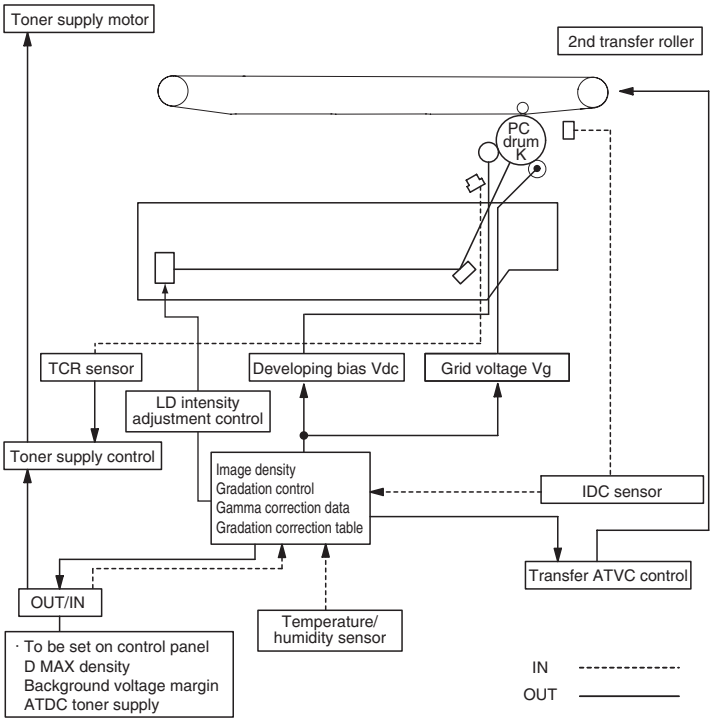

17.2 Description of control

17.2.1 IDC sensor adjustment control

- Controls changes in characteristics due to change with time and contamination of the transfer belt and IDC sensor, part-to-part variations in the sensors, and change of environment.
- The intensity (current value) of the IDC sensor is adjusted on the surface of the transfer belt, on which no toner sticks (background level).

17.2.2 Max. density adjustment control

- The developing bias (Vdc) is adjusted to control changes in the solid density resulting from variations in developing characteristics and IDC sensor intensity, variations in sensitivity of the photo conductor, and changes in the environment, durability, and the amount of charge in toner.
- Patterns are produced on the surface of the transfer belt and the IDC sensor detects the amount of toner sticking to them.
- Referring to the detected data and the environment data taken by the temperature/ humidity sensors, the developing bias value that results in the appropriate maximum density is calculated and stored in memory.
- Thereafter, the grid voltage (Vg) value, including the background margin adjustment value, is calculated and stored in memory.

17.2.3 LD (laser diode) intensity adjustment control

- It adjusts the variation in reproducibility of the thin line and the reverse outline, which is resulting from the variations in electrostatic characteristics of the photo conductor, developing characteristics and transfer characteristics in terms of individual difference, environment and durability, to make it the target level.
- It produces detection patterns on the surface of the transfer belt with the given level of LD intensity and detects the output value of IDC sensor.
- LD intensity is calculated from the detected IDC sensor data.

17.2.4 Gamma correction control

- The intensity of LD in all gradation levels is adjusted to correct changes in gradation characteristics to a linear one. The changes in gradation characteristics are caused by variations in the photo conductor sensitivity and developing characteristics and changes with time and in environment.
- It produces gradation patterns on the transfer belt and calculates gradation characteristics output by the current engine with the IDC sensor.
- The gamma correction data is calculated using the density measurements of different gradation levels. The optimum LD intensity is set for each of the different gradation levels.

17.3 Control contents

17.3.1 Image stabilization type (mode)

- Three different modes of image stabilization are available.
- A specific mode is selected according to the environmental conditions and print requirements, thereby achieving stabilized image at all times.

Stabilization type	Description
Mode 1	Image stabilization control performed when a unit is replaced with a new one
Mode 2	Ordinary image stabilization control
Mode 3	Simplified image stabilization control

17.3.2 Control sequence by mode

- A different control sequence applies according to the mode of image stabilization.
- Control is performed in the specified sequence for each mode.

Sequence	Mode 1	Mode 2	Mode 3
1	IDC sensor adjustment	IDC sensor detectio	IDC sensor detection
2	Dmax density adjustment	Dmax density adjustment	Dmax density adjustment
3	LD light intensity adjustment	LD light intensity adjustment	-
4	Dmax density adjustment	-	-
5	LD light intensity adjustment	-	-
6	Gamma correction	-	-

17.4 Operation timing

17.4.1 Predrive operation

- The following describe the stabilization operations executed when, for example, the main power switch is turned ON, the sleep mode is canceled, the front door is closed, or a malfunction is reset.

Mode	Operation condition
Mode 1	• A new drum unit or a new developing unit is detected. • A new transfer belt is detected • The machine recovers from a toner empty condition. • While a warning code is being displayed. • “Initialize + Image Stabilization” is selected from the service mode.
Mode 2	• In the last image stabilization, the value of IDC sensor detection was out of the specified range. • A change in environment is detected (a change in environment exceeding the threshold value is detected since the last image stabilization sequence). • The count of the number of printed pages is 10,000 as counted from the last LD adjustment. • “Image Stabilization” is selected from the service mode.
Mode 3	• The count of the number of printed pages after the gamma adjustment is 1000 or more.

17.4.2 During a print cycle

- When the stabilization execution condition is met during printing, a specific image stabilization mode according to the condition is selected and executed.

Operating conditions		Performance timing	Stabilization mode
Change of a predetermined value or more in temperature after last stabilization	Print count after last stabilization *1		
Yes	1,000 sheets or less	At the start or end of a print cycle	Mode 2 is executed
	1,000 sheets or more	Immediately	
No	1,000 sheets or less	-	-
	1,000 sheets or more	Immediately	Mode 3 is executed

- *1: Counting method of printed pages

Paper length in the sub scanning direction	Count
216 mm or less	1
Over 216 mm	2

17.4.3 Service Mode

- Types (modes) of image stabilization to be executed with the menu of the service mode will be described.

Menu of service mode	Gradation Adjust (Service Mode -> Imaging Process Adjustment -> Gradation Adjust)	
Type (mode) of image stabilization to be executed	Mode 2	

Menu of service mode	Stabilizer (Service Mode -> Imaging Process Adjustment -> Stabilizer)	
Type (mode) of image stabilization to be executed	Initialize + Image Stabilization	Mode 1
	Stabilization Only	Mode 2

17.4.4 Expert Adjustment

- Types (modes) of image stabilization to be executed with the menu of the expert mode will be described.

Menu of expert mode	Gradation Adjustment (Utility -> Administrator Settings-> System Settings -> Expert Adjustment -> Gradation Adjustment)	
Type (mode) of image stabilization to be executed	Mode 2	

Menu of expert mode	Image Stabilization (Utility -> Administrator Settings-> System Settings -> Expert Adjustment -> Image Stabilization)	
Type (mode) of image stabilization to be executed	Initialize + Image Stabilization	Mode 1
	Image Stabilization Only	Mode 2

17.4.5 Stabilization time

States		Time
Mode 1	bizhub 364e	Approx. 17 sec.
	bizhub 284e/224e	Approx. 20 sec.
Other than the above	bizhub 364e	Approx. 13 sec.
	bizhub 284e/224e	Approx. 14 sec.

18. IMAGE PROCESSING

18.1 Scanner section image processing block diagram

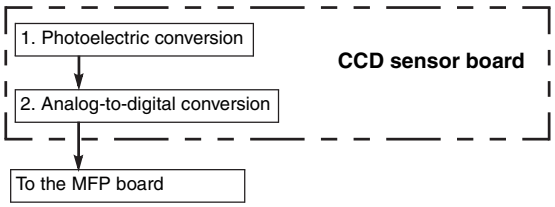

- A reduction type CCD sensor is used to read the light reflected off the original and convert the optical data to a corresponding electric signal. To make data processing faster, data transfer and output are done through two channels, one for even-numbered pixels and the other for odd-numbered pixels.
  1. A reduction type CCD sensor is used to read the light reflected off the original and convert the optical data to a corresponding electric signal. To make data processing faster, data transfer and output are done through two channels, one for even-numbered pixels and the other for odd-numbered pixels.
  2. The odd and even analog signals output from the CCD sensor chips are synthesized to form a single string of signal data which is in turn converted to 10-bit digital signals (1024 gradation levels).
- The image data is transmitted to MFP board on the write section through the interface cable.

18.2 Write section image processing block diagram

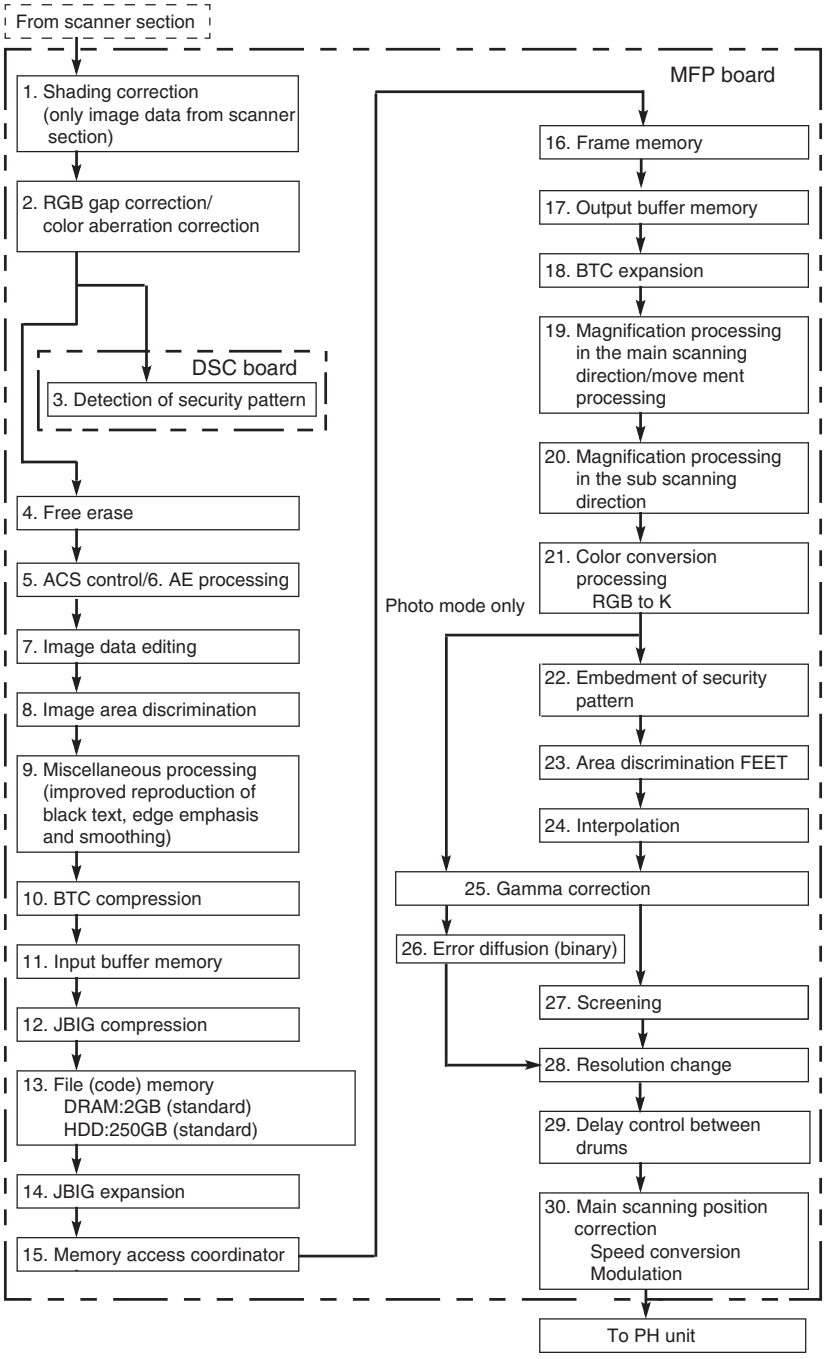

- The following detail the image processing operations performed by MFP board on the Write section.

1. Correct variations in reading caused by pixel-to-pixel variations in sensitivity of the CCD sensor and uneven light distribution by the exposure LED. A peak-hold-type shading correction is performed, in which the maximum value of two or more readings of two or more lines is taken to prevent effect due to dust or dirt on the shading sheet. (only image data from scanner section)
2. To correct differences in the position of each chip of CCD sensors R, G, and B, FIFO memory is adopted to match the output timing. Also correct color aberration of the lens.
3. The security pattern created during printing on this machine is detected and copying is enabled or disabled through a password (when the security kit SC-508 is mounted).
4. If outer document elimination is selected from the control panel, document area determination processing is performed for each line within the document area data acquired during prescan. Then, the START and END positions of the document area in the main scanning direction are detected and the area outside the START and END positions is erased as the outside-the-document area.
5. The scanning area is divided into multiple blocks. The ratio of color or monochrome is calculated for each of these blocks. The machine then determines whether the entire original is colored or monochrome.
6. A histogram of lightness for AE processing is generated. The AE level of the document is determined based on this histogram and AE processing is performed.
7. R, G, and B data are then converted to value and color component data for adjustments of saturation, lightness, and hue.
8. Each image area, whether it is a color edge area, black edge area, dot area, or a continuous gradation area, is discriminated.
9. Other types of processing performed are the improved reproduction of black text, edge emphasis, smoothing and color balance.
10. Each image data of R, G, and B is compressed to reduce the consumption of data capacity.
11. Temporarily stores the BTC-compressed image data.
12. The stored image data is compressed in the JBIG (Joint bi-level image experts group) format.
13. Each image data of R, G, and B in the copy, print, scan, and fax mode is stored. In PS printing, multi-valued data of Y, M, C, and K is stored.
14. The image data read from the file memory is uncompressed through a method in a reverse way of JBIG compression. At this time, image rotating or sorting processing is conducted.
15. JBIG image data are expanded in the frame memory.
16. Each image data of R, G, and B is stored in frame memory.
17. Temporarily stores the image data output from the frame memory.
18. The image data is expanded through a method opposite to that used in the BTC compression.
19. FIFO memory is used to enlarge or reduce images in the main scanning direction. The image is enlarged by increasing the number of data readings and reduced by decreasing the number of data readings.
20. Reduction processing is conducted in sub scanning direction. No processing is done at same size or zoom, but at reduction, the lines are thinned out.
21. The R, G, and B data is converted to the density data.
22. The security pattern is embedded in the image data. Either enabling copying through a password or unconditionally prohibiting copying can be selected from the control panel for the security pattern to be embedded (when the security kit SC-508 is mounted).
23. Edge of letter and lineal drawing gets area discrimination and FEET processing is conducted according to the discrimination result.
24. When FEET processing is conducted, interpolation is done so that no influence is given to continuous gradation portion.
25. Makes the necessary corrections so that the printed gradations have linear characteristics, since the image density of the input image data is not directly proportional to that of the printed image because of the changing developing and photo conductor characteristics.
26. In photo mode during copying and PC print, the image is processed as multi-valued data (8-bit data). In any mode other than photo, the error diffusion method is employed to process the image as binary (1-bit) data.
27. Creates the density distribution of a predetermined pattern to enable outstanding gradation reproduction.
28. For 1200 dpi writing, the 600 dpi image data is converted to corresponding 1200 dpi image data.
29. Correct the shear in printing start position in the main scanning direction, which occurs when each PH unit is exposed on the photo conductor. Adjust the processing speed in the board (main scanning) to conform to the input processing speed.

19. POWER SUPPLY SECTION

19.1 Main power switch

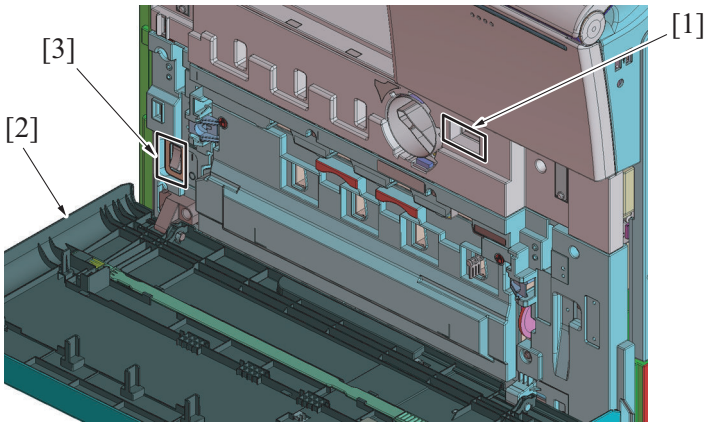

[1]	Total counter	[2]	Front door (open position)
[3]	Main power switch (SW 1)	-	-

NOTE

- **To turn OFF and ON the main power switch, first turn OFF the main power switch and wait for 10 sec. or more before turning it ON again. If a setting value or values in the service mode are changed, it takes 10 sec. or more to incorporate the setting changes properly in the machine.**

19.2 Power key

19.2.1 Configuration

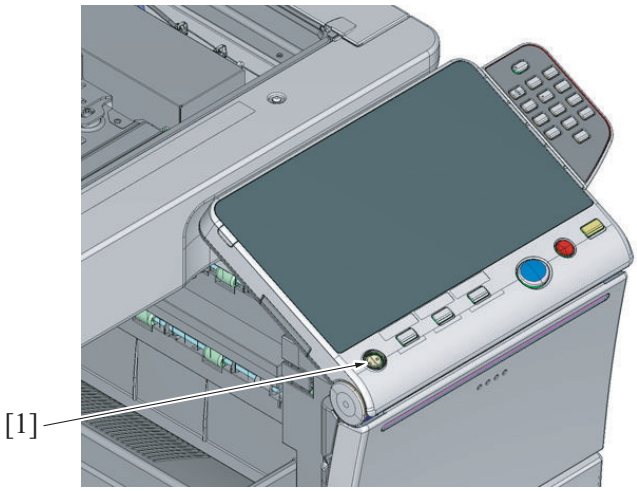

[1]	Power key	-	-

19.2.2 Operation

(1) Power key functions

- The power key offers two functions, serving as the power save button and the sub-power switch found in conventional models, depending on how long it is held down.
- In the default setting, holding down the power key for a short time sets the machine into the sub power OFF mode and holding it down for a long time sets the machine into the ErP auto power off mode.
- "I.7.1 System Settings-Power Supply/Power Save Settings" allows the setting to be changed as follows: holding down the power key for a short time sets the machine into the power save mode (low power mode or sleep mode) and holding it down for a long time sets the machine into the sub power OFF mode.

How long the power key is held down	Default setting	Settings changed by Administrator Settings	
Short time	Sub power OFF mode	Power save mode*	Low power mode**
			Sleep mode**
Long time	ErP auto power off mode	Sub power OFF mode*	

- *: I.7.1.3 Power Key Setting
- **: I.7.1.4 Power Save Settings

(2) Status in each mode

Mode		Status	Power key LED	Power consumption
Standby		All functions are ready to accept and ready to perform jobs.	Lit up blue	146 W or less
Power save mode	Low power mode	Power consumption is limited to a level lower than the standby state with the fusing temperature control minimized; reset when a job is received or the machine is operated.	Blinking in blue	36 W or less
	Sleep mode	Power is supplied only to a portion of the MFP board required for receiving a job; reset when a job is received or the machine is operated.	Blinking in blue	1.5 W or less
Sub power OFF mode		Power is supplied only to the MFP board; a job can be received, but printing is performed when power is turned ON; reset only by the power key.	Lit up orange	1.5 W or less
ErP auto power off mode		Power consumption to the lowest level; reset only by the power key or the weekly timer setting; no jobs can be received*	Blinking in orange	0.2 W or less

- *: In ErP auto power OFF mode, this machine cannot receive data or faxes, and also it cannot scan or print an original.

(3) Power supply

Power is supplied only to the following portions in the sleep mode and the sub power OFF mode.

5.1V	• MFP controller • FAX CPU • HDD • USB board
	• Angle sensor • The cover is opened or closed • Control panel key

19.3 Power cables

19.3.1 Configuration

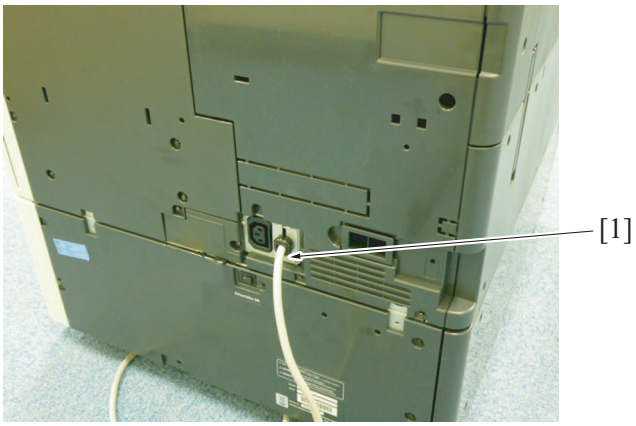

[1]	Power supply: • 100V 15A • 110V 15A • 120V 12A • 230V 8A	- -

19.3.2 Operation

- The main body uses a single outlet.

20. FAN CONTROL

20.1 Configuration

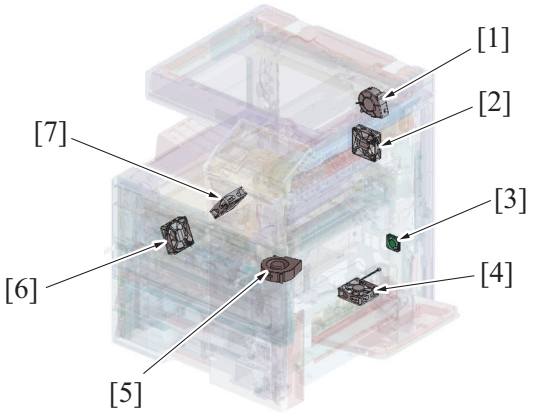

[1]	Paper cooling fan (FM8)	[2]	Toner bottle
[3]	CPU cooling fan (FM14) *	[4]	Machine rear side cooling fan (FM3)
[5]	Ozone fan (FM13)	[6]	Power supply cooling fan (FM1)
[7]	Transfer belt cleaner cooling fan (FM2)	-	-

- *: bizhub 364e/284e only

20.2 Function

Motor name	Control conditions
Paper cooling fan (FM8)	• When the paper with toner heated at fusing section exit while still at high temperature, toner may be transferred to other paper on the exit tray. In order to avoid this, air is applied to cool the toner and paper.
Transfer belt cleaner cooling fan (FM2)	• Draws air from the drum unit and developing unit area to prevent the temperature of the process section and transfer cleaner section from rising.
Power supply cooling fan (FM1)	• Draws outside air into the inside of the machine to prevent the temperature around the DC power supply, PH section, developing/drum unit.
Ozone fan (FM13)	• A white belt may occur on the image because of the lower sensitivity of the PC drum due to ozone accumulated around the PC drum charge corona. In order to avoid this trouble, ozone filter removes the ozone inside the PC drum charge corona to keep the sensitivity of the PC drum. • Ozone accumulated around PC drum charge corona will be absorbed by ozone filter and be removed.
Machine rear side cooling fan (FM3)	• Blows outside air against around the MFP board, HV board and drive unit to prevent the temperature of the board from rising.
CPU cooling fan (FM14)	• Blows outside air against the CPU to prevent the temperature of the CPU from rising.
Toner bottle cooling fan (FM4)	• Draws outside air into the inside of the machine to prevent the temperature of the toner cartridge from rising.

20.3 Fan control

Motor name	Control	Control conditions (outline)
Power supply cooling fan (FM1)	STOP	• At paper-jam, in trouble, or when the door is open • When updating the firmware • In standby *2 • In low-power or sleep
	Full speed	• At warm-up • At initial operation, image stabilization, transfer cleaning, function *1 • When printing
Machine rear side cooling fan (FM3)	STOP	• Other than those below
	30% air flow relative to that of full speed	• At paper-jam, in trouble • At warm-up • In low-power • In standby
	Full speed	• When printing • At initial operation, image stabilization, transfer cleaning, function *1
Paper cooling fan (FM8)	STOP	• Except when printing
	Full speed	• When printing
Transfer belt cleaner cooling fan (FM2)	STOP	• Other than those below
	Full speed	• At warm-up • At initial operation, image stabilization, transfer cleaning, function *1 • When printing

Motor name	Control	Control conditions (outline)
Toner bottle cooling fan (FM4)	STOP	• Other than those below
	Full speed	• When printing • At initial operation, image stabilization, transfer cleaning, function *1
CPU cooling fan (FM14)	STOP	• CPU ambient temperature is less than a predetermined value
	Full speed	• CPU ambient temperature is equal to, or more than, a predetermined value
Ozone fan (FM13)	STOP	• Other than those below
	Full speed	• At initial operation, image stabilization, transfer cleaning, function *1 • Predetermined period of time after end of print cycle

- *1: Some operations selected in the service mode (Paper path check etc.)
- *2: If the machine enters the “standby” state, the fan motor turns at full speed for predetermined time before stopping.
- *3: Half speed rotation after the lapse of the predetermined period of time of full speed rotation

21. COUNTER CONTROL

21.1 Configuration

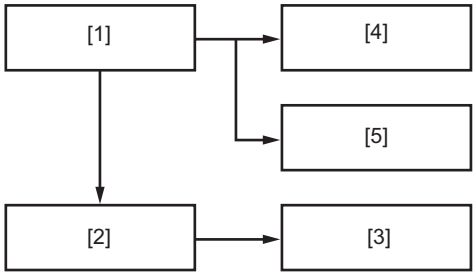

[1]	Printer control board (PRCB)	[2]	MFP board (MFPB)
[3]	Electronic counter	[4]	Total counter
[5]	Key counter (option)	-	-

21.2 Operation

Name	Function/system
Total counter	• Displays the cumulative number of copies and prints of all jobs. • A mechanical counter driven by an electric signal • Counts one when an exit signal is applied to it
Electronic counter	• Number of total in copy/print/fax/scan mode will be displayed on the screen as described below. • Total counter, large size counter, total (copy + printer), scan counter, fax TX counter, fax RX counter, No. of originals counter, No. of prints counter, total duplex counter • Counts one when an exit signal is applied to it
Key counter (option)	• When charging prints by using the key counter, copies cannot be made with out the key counter. However PC prints and fax TX/RX service are available without the key counter. • Displays the cumulative number of copies while the key counter is being mounted. • A mechanical counter driven by an electric signal • Counts one when a paper take-up start signal or image forming start signal, whichever occurs earlier, is applied to it

NOTE

- **The counting modes can be selected at [billing setting] of service mode. For details, see "I.13.3.1 Counter Setting".**

22. HEATER

22.1 Configuration

22.1.1 Front side

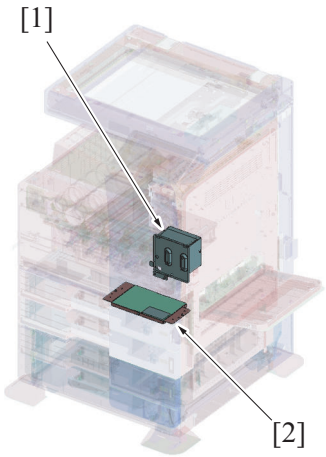

[1]	Power Supply BOX (MK-734)*1	[2]	Heater (HT-509)*1

*1: Option

22.1.2 Rear side

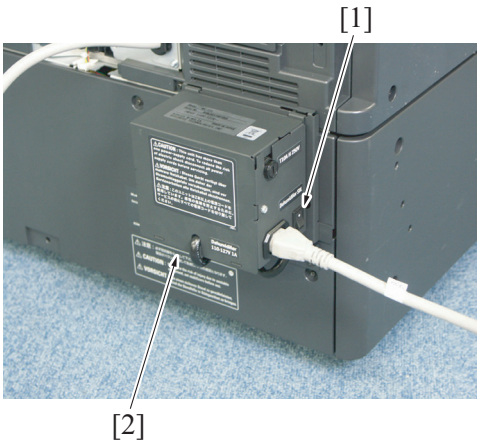

[1]	Heater switch	[2]	Power Supply BOX

22.2 Functions

- Functions for each heater are described below.

Heater name	Functions
Heater (HT-509)	• The heater generates heat when provided with an electric power, which prevents the paper loaded in the paper tray from absorbing moisture. • The optional heater can be provided on the top of the paper feed cabinet additionally.

22.3 Control

- Controls for each heater are described below.

Heater name	Control
Heater (HT-509)	• The heater will turn ON when the heater switch provided on the MK-734 of the heater is turned ON, the engine is on stand-by or power save mode, or stops due to open cover, a trouble or paper jam. • The heater will not turn ON when the heater switch is turned OFF.

23. INDICATOR FUNCTION

23.1 Configuration

23.1.1 Control panel section



[1]	Start key indicator section	[2]	Power key indicator section
[3]	Warning Status indicator section	-	-

23.1.2 Front side section

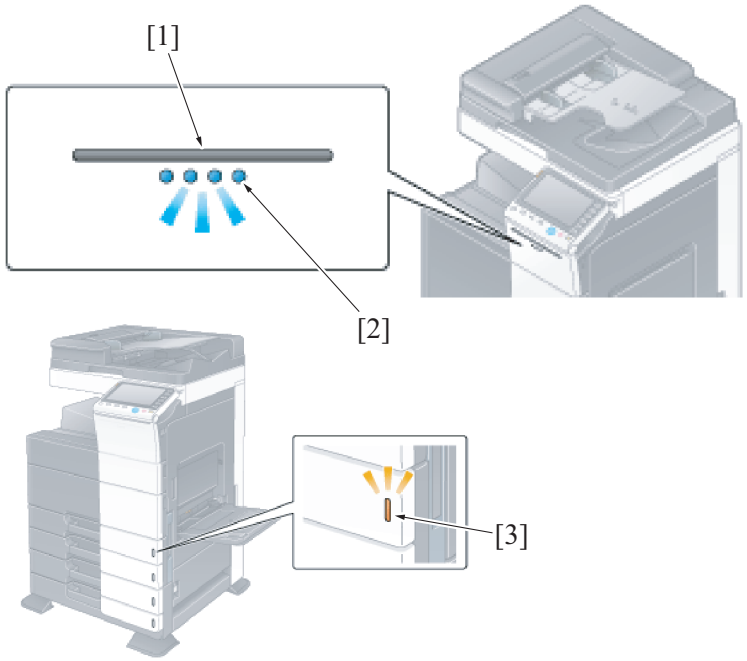

[1]	Operation status indicator section	[2]	Data indicator section
[2]	Remaining paper level display section	-	-

23.2 Control

- The lighting control for the LED on each indicator section is described below.

23.2.1 Power key and Start key indicator section

	LED indicator	
During warm-up	Lit up blue	Lit up orange
		
During stand-by	Lit up blue	Lit up blue

		
During copying or printing	Lit up blue	Lit up blue or orange
		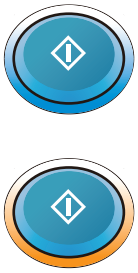
Paper jam or trouble	Lit up blue	Lit up orange
		
Low power mode Sleep mode	Blinking in blue	Unlit
		
ErP auto power off mode	Blinking in orange	Unlit
		
Sub power auto power off mode	Lit up orange	Unlit
		

23.2.2 Warning Status indicator section

	LED indicator
When machine stops	Lit up orange
	
When warning occurs	Blinking in orange

	
Other status	Unlit
	

23.2.3 Operation status indicator section

	LED indicator
During copying or printing	Steady light and blinking light are repeated
	
Other than above	Unlit

23.2.4 Data indicator section

	LED indicator
Job is currently	Lit up blue
	
Receiving a job	Blinking in blue
	
Other status	Unlit
	

23.2.5 Remaining paper level display section

	LED indicator
Paper Empty	Lit up orange
	
Paper Near Empty	Blinking in orange or unlit *
	
Other status (During lift up, including open cassette)	Unlit
	

*: The lighting status varies depending on the following settings. [Service Mode] -> [System 1] -> [Machine State LED Setting]. Type 1: Blinks in orange, Type 2: Unlit

PA THEORY OF OPERATION DF-624

1. CONFIGURATION

1.1 Section configuration

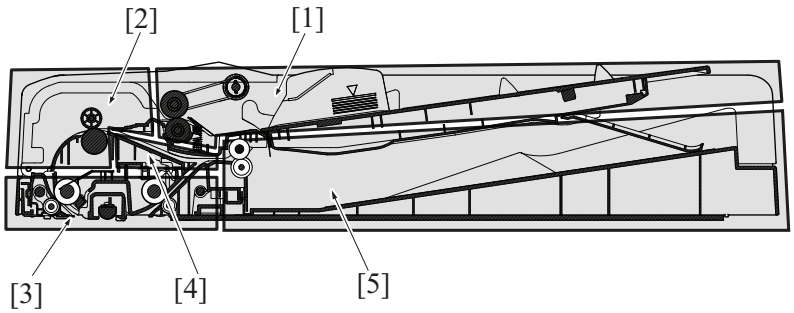

[1]	Document feed section	[2]	Document registration section
[3]	Document reading section	[4]	Document switchback section
[5]	Document exit section	-	-

1.2 Paper path

1.2.1 1-sided paper path

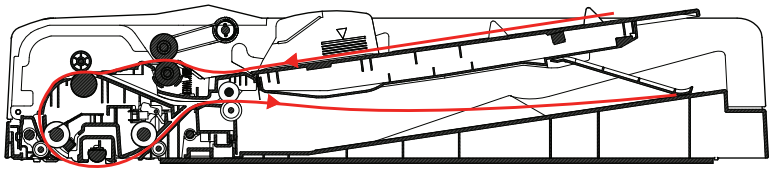

1.2.2 2-sided paper path

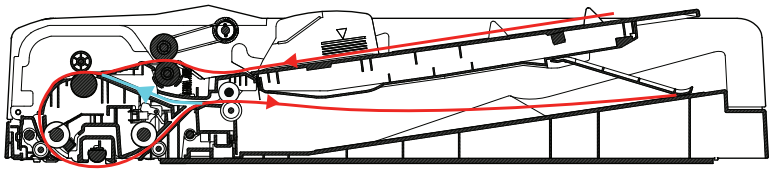

1.3 Configuration

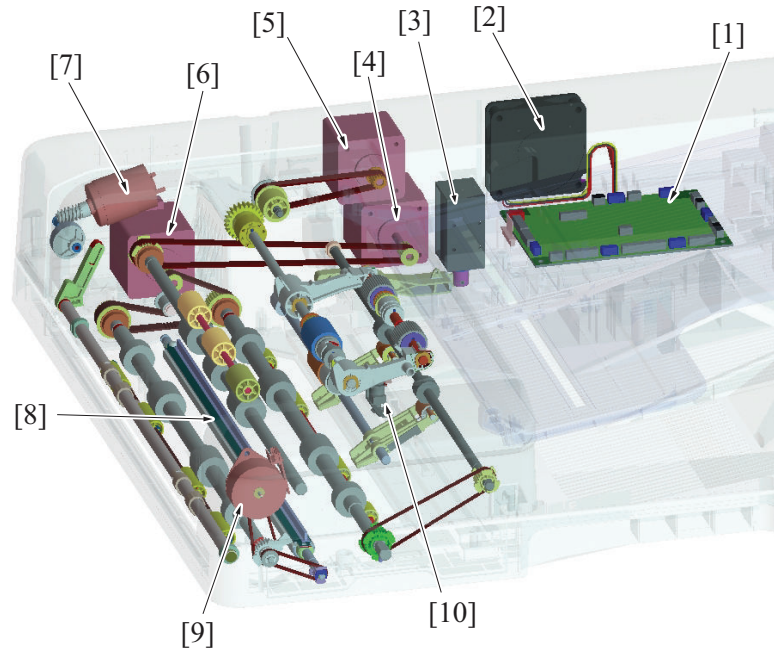

[1]	DF control board (DFCB)	[2]	DF cooling fan motor (FM1)
[3]	Document exit roller release solenoid (SD1)	[4]	Registration motor (M3)
[5]	Document feed motor (M2)	[6]	Document reading motor (M1)
[7]	Reading roll release motor (M5)	[8]	Document reading glass cleaning roller
[9]	Glass cleaning motor (M4)	[10]	Stamp Unit (SP-501) * option

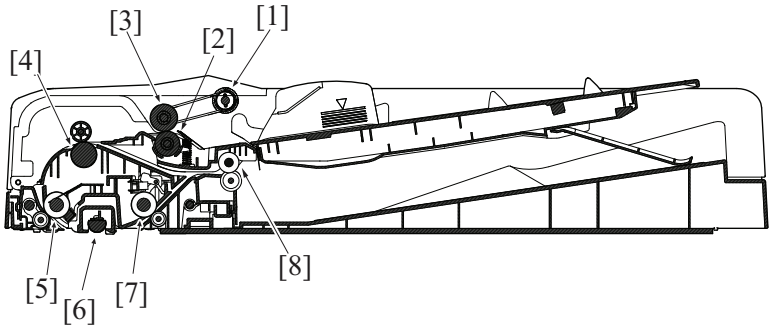

[1]	Document pick-up roller	[2]	Document separation roller
[3]	Document feed roller	[4]	Registration roller
[5]	Document reading roller/1	[6]	Document reading glass cleaning roller
[7]	Document reading roller/2	[8]	Switchback exit roller

2. DRIVE

2.1 Paper feed drive

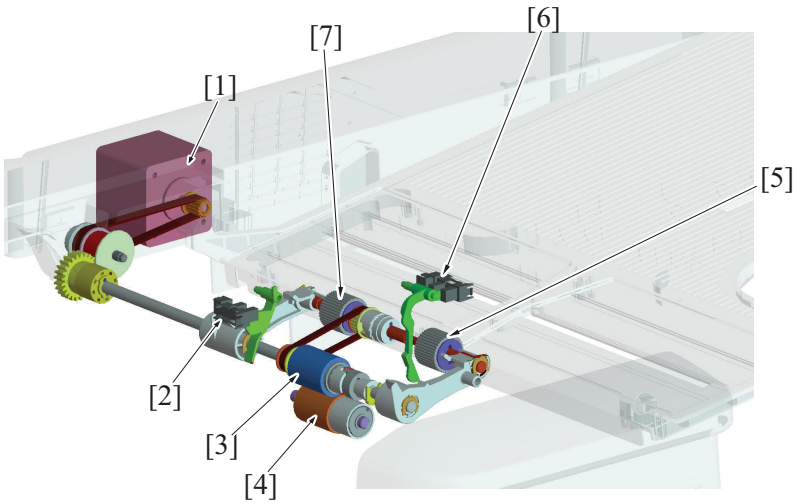

[1]	Document feed motor (M2)	[2]	After Separate sensor (PS2)
[3]	Document feed roller	[4]	Document separation roller
[5]	Document pick-up roller	[6]	Document empty sensor (PS1)
[7]	Document pick-up roller	-	-

- The document feed section consists of the document pick-up roller, document feed roller, as well as the document separation roller, and is directly driven by the document feed motor.
- When the start key is pressed, the document pick-up roller lowers to press the original, and the original is taken up and fed in. The original is transported to the registration roller by the document pick-up roller and document feed roller.
- After the take-up and feeding sequence, the document feed motor is rotated backward, which raises the document pick-up roller.

2.2 Registration drive

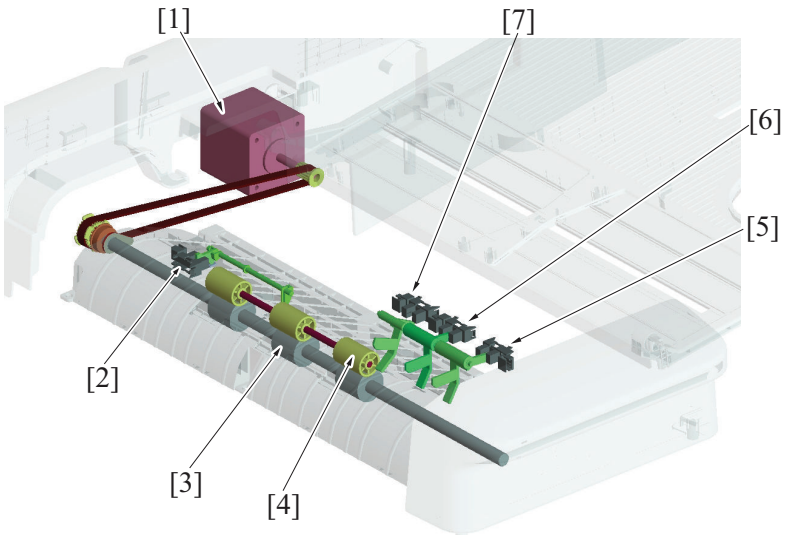

[1]	Registration motor (M3)	[2]	Document registration sensor (PS3)
[3]	Registration roller	[4]	Registration roll
[5]	Mixed original sensor/3 (PS10)	[6]	Mixed original sensor/2 (PS9)
[7]	Mixed original sensor/1 (PS8)	-	-

- Timing at which to start transporting the original is controlled using the registration motor.
- The original is pressed against the registration roller and registration roll. This forms a loop in the original to thereby correct any skew in the original.
- Mixed original sensors/1, 2/, and 3/ detect width of the originals in the mixed original mode.

2.3 Document reading drive

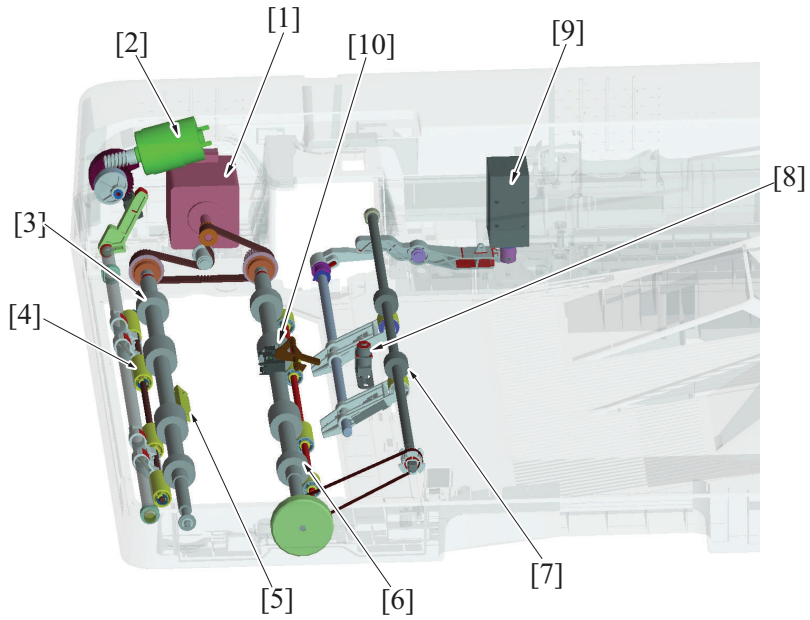

[1]	Document reading motor (M1)	[2]	Reading roll release motor (M5)
[3]	Document reading roller/1	[4]	Document reading roll
[5]	Document reading sensor (PS4)	[6]	Document reading roller/2
[7]	Document exit roller	[8]	Stamp unit (SP-501) * option
[9]	Document exit roller release solenoid (SD1)	[10]	Document exit sensor (PS5)

- The document reading motor drives the document reading section and document exit section.
- The document reading roll is equipped with a pressure/release mechanism. The pressure is released when the trailing edge of the original moves past the roller.
- The document reading motor rotates backward to allow the second feed of the document to be performed during switchback in the 2-sided mode.
- The document exit roll is equipped with a pressure/release mechanism. The pressure is released when the original is fed in a second time so that its second side can be read.

2.4 Document reading glass cleaning drive

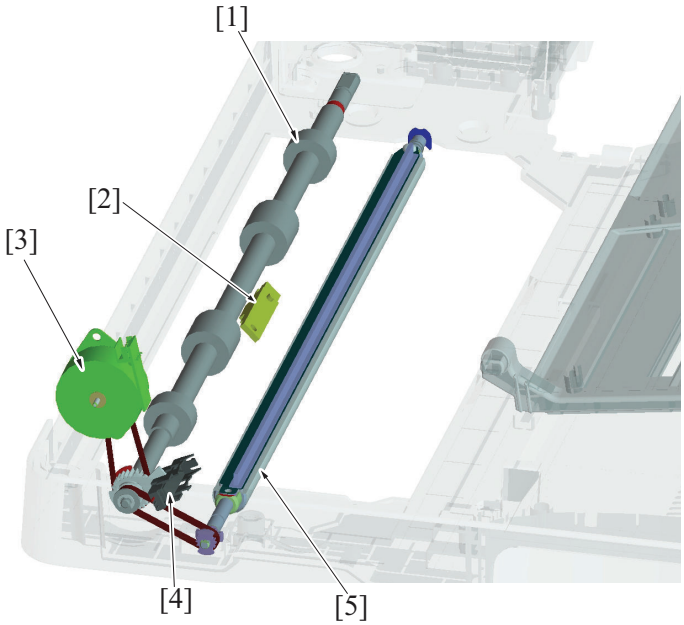

[1]	Document reading roller	[2]	Document reading sensor (PS4)
[3]	Glass cleaning motor (M4)	[4]	Document reading glass cleaning sensor (PS12)
[5]	Document reading glass cleaning brush	-	-

- The glass cleaning motor drives the document reading glass cleaning brush.
  The position of the cleaning brush is controlled by the document reading glass cleaning sensor.

3. OPERATION

3.1 Document feed section

3.1.1 Document set/empty detection

- When an original is loaded on the document feed tray, the document empty sensor detects that there is original.
- If no original is loaded when the document pick-up roller is in the standby position, the actuator blocks the document empty sensor and it is detected that no original is loaded.
- When an original is loaded on the document feed tray, the leading edge of the original pushes the actuator so that the document empty sensor is unblocked. It is detected that an original is loaded.
- When all pages of the original are fed in, the document empty sensor detects that there is no original on the document feed tray.

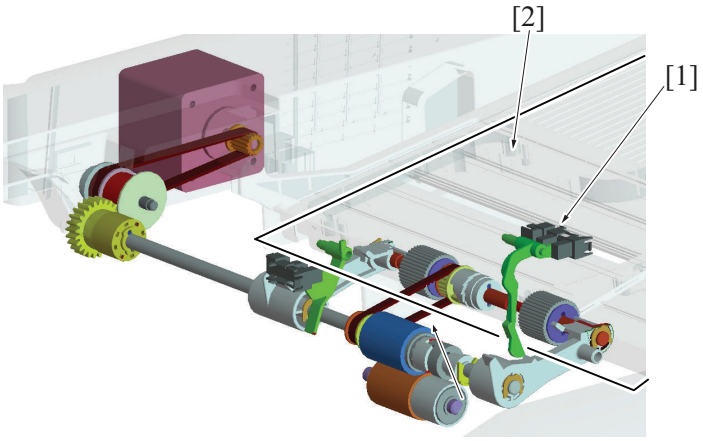

[1]	Document empty sensor (PS1)	[2]	Original

3.1.2 Document size detection mechanism

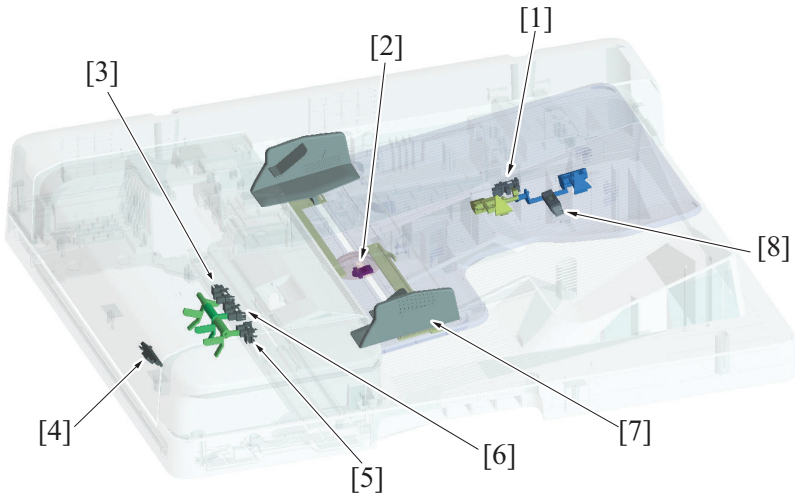

[1]	Document length size sensor/1 (PS6)	[2]	Document width size sensor (VR1)
[3]	Mixed original sensor/1 (PS8)	[4]	Document reading sensor (PS4)
[5]	Mixed original sensor/3 (PS10)	[6]	Mixed original sensor/2 (PS9)
[7]	Document width guide	[8]	Document length size sensor/2 (PS7)

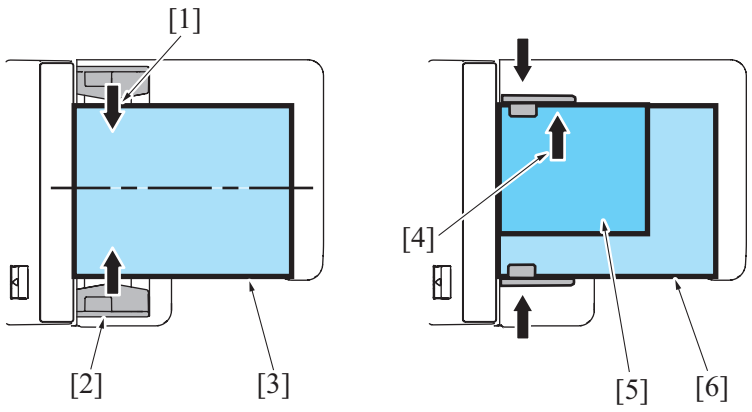

[1]	Adjust the document width guide plates (center alignment)	[2]	Document guide width plates

[3]	Original (standard mode)	[4]	Align the original with narrow width with the rear side of the document width guide plates (rear alignment)
[5]	Original with narrow width (mixed original mode)	[6]	Original with wide width (mixed original mode)

(1) Detecting the width of the original

- The width of the original is set on the document feed tray will be detected by the document width size sensor.
- A variable resistor is incorporated in the document width size sensor. Its resistance value varies in association with the movement of the document width guide.
- The original is to be loaded in the document feed tray by aligning it with reference to the center of the document feed tray in the standard mode. In the mixed original mode, however, the original is aligned with reference to the rear side of the document width guide plates.

(2) Detecting the length of the original

- The length of the original is set on the document feed tray will be detected by the document length size sensors/1 and /2.
- The document length size sensor/1 is a transmission type, while document length size sensor/2 is a reflection type. The document length size sensor/1 is detected by two actuators, that is, actuator/1 and actuator/2.
- When the document feed tray is not loaded with any originals, document length size sensor/1 is blocked. When an original is loaded and only actuator/1 is pressed, document length size sensor/1 is unblocked. When both actuator/1 and actuator/2 are pressed, a blocked document length size sensor/1 is detected by actuator/2.

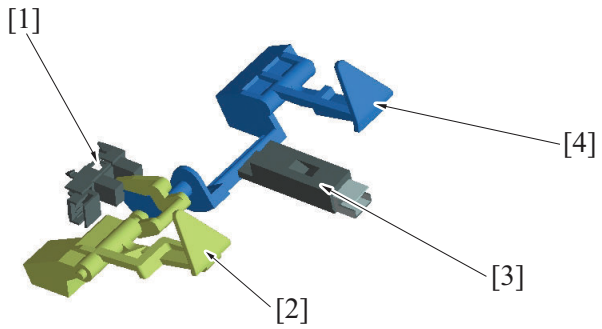

[1]	Document length size sensor/1 (PS6)	[2]	Actuator/1
[3]	Document length size sensor/2 (PS7)	[4]	Actuator/2

(3) Detecting the width of the original (in the mixed original/AMS mode)

- In the mixed original/AMS mode, no width is determined on the document feed tray; rather, the width is detected while the originals are being fed. Three mixed original sensors are disposed at positions immediately after the document feed section, functioning to detect the width of the original.

(4) Detecting the length of the original (in the mixed original/AMS mode)

- In the mixed original/AMS mode, no length is determined on the document feed tray; rather, the length of the original is calculated and determined based on the period of time during which the document reading sensor remains activated.

(5) Document feed tray size detection

- The original size is determined by the combination of the results of detection made of the width and length of the original.

Metric area

Document length size sensor/2 (PS7)		OFF	OFF	Reflector	Reflector
Document length size sensor/1 (PS6)		Blocked	Unblocked	Unblocked	Blocked
Document width size sensor (VR1)	114.5	A6S	B5S	A4S	A3
	136	B6S	B5S	A4S	A3
	163	A5S	B5S	A4S	A3
	190.6	B5S	B5S	A4S	A3
	236.5	A5	Letter S	A4S	Foolscap
	266.2	B5	B4	B4	B4
	286.2	Letter	Ledger	Ledger	Ledger
	(307)	A4	A3	A3	A3

Inch area

Document length size sensor/2 (PS7)		OFF	OFF	Reflector	Reflector
Document length size sensor/1 (PS6)		Blocked	Unblocked	Unblocked	Blocked
Document width size sensor (VR1)	158.7	Invoice S	Letter S	Legal	Ledger
	194	B5S	B5S	Legal	Ledger
	236.5	Invoice	Letter S	A4S	Legal
	266.2	B5	B4	B4	B4
	286.2	Letter	Ledger	Ledger	Ledger
	(307)	A4	A3	A3	A3

8K/16K

Document length size sensor/2 (PS7)		OFF	OFF	Reflector	Reflector
Document length size sensor/1 (PS6)		Blocked	Unblocked	Unblocked	Blocked
Document width size sensor (VR1)	114.5	A6S	16KS	A4S	A3
	136	B6S	16KS	A4S	A3
	169.5	A5S	16KS	A4S	A3
	202.5	A5	16KS	A4S	A3
	243	A5	16KS	A4S	A3
	281.5	16K	8K	8K	8K
	(307)	A4	A3	A3	A3

3.1.3 Pick-up roller up/down control

(1) Up control

- When a job is completed, the document feed motor starts rotating backward. Then, the swing arm mounted on the same shaft as the document feed roller is rotated backward to thereby raise the document pick-up roller to the standby position.
- The document pick-up roller is fixed at the raised position by a torque limiter of the paper drive section.
- When the swing arm is raised to the standby position, the document stopper is lowered by its own weight and fixed by the lock pawl of the swing arm. The document stopper is unlocked when the swing arm lowers.
- The document stopper has two functions: one, to align the leading edges of the originals loaded in the standby state; and, two, to prevent the leading edge of the original from advancing over the pick-up position into the feed section.

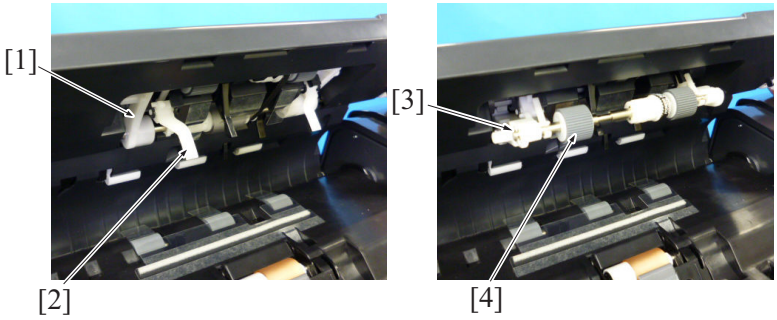

[1]	Swing arm (standby position)	[2]	Document stopper
[3]	Swing arm (feed position)	[4]	Document pick-up roller

(2) Down control

- When the start key is pressed, the document feed motor starts rotating forward. The rotation shaft of the swing arm mounted on the same shaft as the document feed roller, is rotated forward so that the document pick-up roller is lowered to the feed position.
- The document stopper is unlocked when the swing arm lowers.

3.1.4 Document feed/separation control

- When the start key is pressed, the document feed motor starts rotating forward, so that the document feed roller rotates forward.
- The rotation shaft of the swing arm mounted on the same shaft as the document feed roller is rotated forward, so that the document pick-up roller is lowered to the feed position. The document pick-up roller is rotated by a drive belt to thereby feed the original onto the document feed roller.

(1) Separation/feed operation

1. The document separation roller is pressed up against, and driven by, the document feed roller. A torque limiter is mounted on the shaft of the document separation roller.
2. The acting pressure of the document feed roller/document separation roller/torque limiter serves as the limit torque for preventing double feed.
3. When there is no original or only one sheet of original between the document separation roller and the document feed roller, the limit torque is exceeded and the document separation roller follows the rotation of the document feed roller.
4. If there are two or more sheets of original between the document separation roller and the document feed roller, the limit torque is greater than the friction force of the original, so that the document separation roller stops rotating.
5. Because of the stationary document separation roller, the lower sheet of original in contact with the document separation roller is not fed in, so that the first sheet of original is original separated from the second sheet of original.

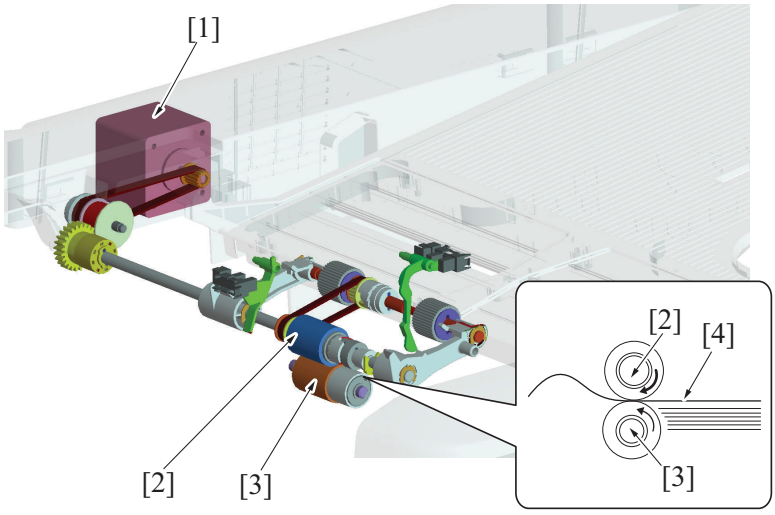

[1]	Document feed motor (M2)	[2]	Document feed roller
[3]	Document separation roller	[4]	Original

(2) Periodically replaced parts

- The document pick-up roller, document feed roller, and document separation roller are periodically replaced parts. These three rollers must be replaced with new ones at the same time.
- None of the document pick-up rollers, document feed rollers, and document separation roller are provided with a new article detection mechanism. When the three rollers are replaced with new ones, the “ADF Feed” counter must be reset to zero using “Counter/ Life” of the Service Mode.
- The number of times the DF has been subjected to paper feed operations can be checked with the “ADF Feed” counter of the Service Mode.

Periodical replacement cycle	Paper feed operations 200,000 times

- For details of the applicable replacement procedures for the document pick-up roller, document feed roller, and document separation roller and the Service Mode, see “F.8.1.3 Replacing the pick-up roller/feed roller” and “F.8.1.4 Replacing the separation roller assy.”

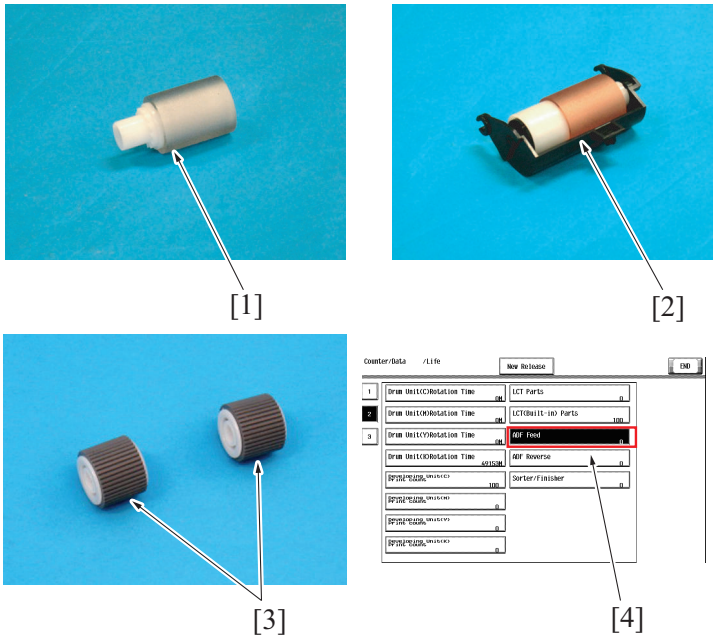

[1]	Document feed roller	[2]	Document separation roller assy
[3]	Document pick-up roller	[4]	Service Mode/Counter reset screen

3.2 Document registration section

3.2.1 Document registration outline

- The registration motor provides the drive for the registration roller.
- The original will create a loop between the document feed roller and the registration roller when the original is being transported in order to correct the skew.

3.2.2 Document registration loop formation process

1. The registration sensor detects the leading edge of the original.
2. The registration roller remains stationary.
3. Because the document feed roller (switchback exit roller for the 2nd side of the original) continues rotating to feed the original, a loop is formed at the leading edge of the original.
4. The loop corrects skew in the original.
5. The registration roller is started to rotate to transport the original.

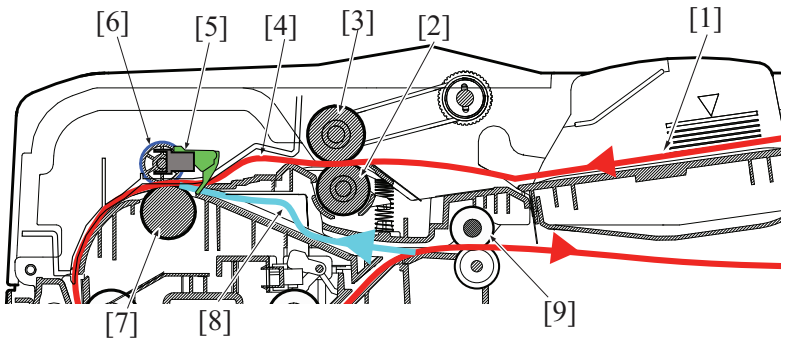

[1]	Original	[2]	Document separation roller
[3]	Document feed roller	[4]	Loop formation (1st side)
[5]	Registration sensor (PS3)	[6]	Registration roll
[7]	Registration roller	[8]	Loop formation (2nd side)
[9]	Switchback exit roller	-	-

3.3 Document reading section

3.3.1 Transport mechanism

- The original transported from the document feed section will be transported to the document reading section by the registration roller, the document reading roller/1 and /2, and the switchback exit roller.
- The registration roller is driven by the registration motor.
- The document reading roller/1 and /2 are driven by the document reading motor.

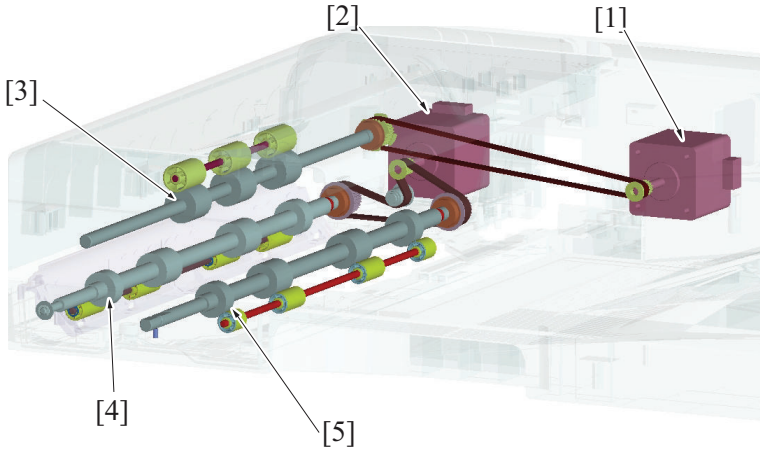

[1]	Registration motor (M3)	[2]	Document reading motor (M1)
[3]	Registration roller	[4]	Document reading roller/1
[5]	Document reading roller/2	-	-

3.3.2 Document reading glass cleaning mechanism

(1) DF original glass cleaning

- A reading line can occur if the DF original glass is contaminated with dust or dirt. The DF original glass cleaning mechanism prevents this fault from occurring.
- A half face of the document reading glass cleaning roller is provided with the document reading glass cleaning brush. While the original is being read, the document reading glass cleaning brush faces up. When the DF original glass is to be cleaned, the document reading glass cleaning roller rotates, so that the document reading glass cleaning brush faces the DF original glass.

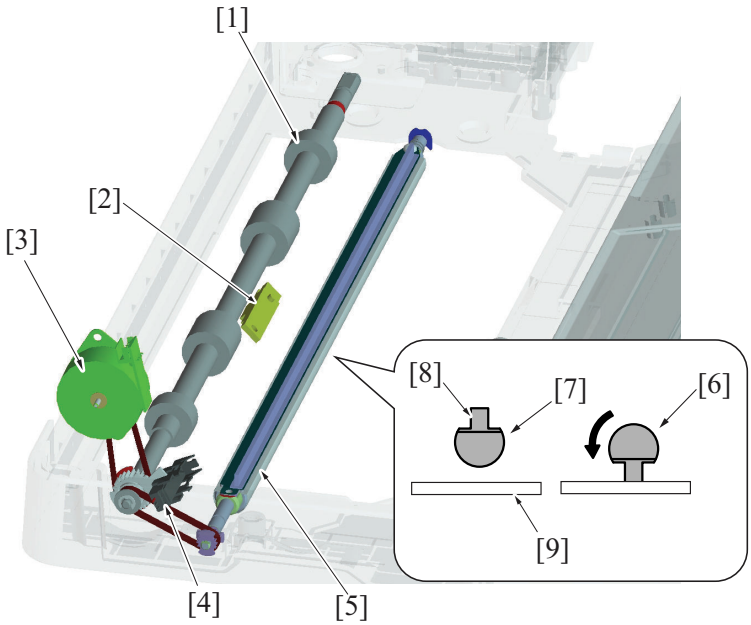

[1]	Document reading roller	[2]	Document reading sensor (PS4)
[3]	Glass cleaning motor (M4)	[4]	Document reading glass cleaning sensor (PS12)
[5]	Document reading glass cleaning roller	[6]	Document reading glass cleaning roller (cleaning position)
[7]	Document reading glass cleaning roller (standby position)	[8]	Cleaning brush section
[9]	Document reading glass	-	-

- The document reading glass cleaning brush is drive by the glass cleaning motor.
  The position of the cleaning brush is controlled by the document reading glass cleaning sensor.

(2) Details of document reading glass cleaning

Condition		Cleaning operation
Predrive	Power ON	Rotates the document reading glass cleaning brush one complete turn to check for its correct operation. (forward rotation)
	Existing from sleep	
Start key ON	Before starting reading	Rotates the document reading glass cleaning brush one complete turn to perform cleaning. (forward rotation: default setting)
	During reading	Rotates the document reading glass cleaning brush one complete turn to perform cleaning for every two originals during continuous reading of originals. (forward rotation)
		Rotates the document reading glass cleaning brush three complete turns to perform cleaning for each original during continuous reading of originals, if [Original Settings] -> [Despeckle] *1 is selected. (forward rotation) Because the document reading glass cleaning brush is rotated three complete turns to perform the cleaning, however, the original-to-original distance is widened than at normal timing. This results in reduced productivity in reading the originals.
		No original glass cleaning sequence is performed between originals during continuous reading of originals, if [System2] -> [ADF Scan Glass Contamin. Set.] -> [Feed Cleaning Settings] -> [0] *2 is selected in the Service Mode.
	After completing reading last original	The document reading glass cleaning brush tends to curl if repeatedly operated in one direction only, resulting in poor cleaning performance. To straighten the brush, it is rotated one complete turn in the backward direction when reading of the last original is completed. (backward rotation)

***1: Despeckle mode setting screen**

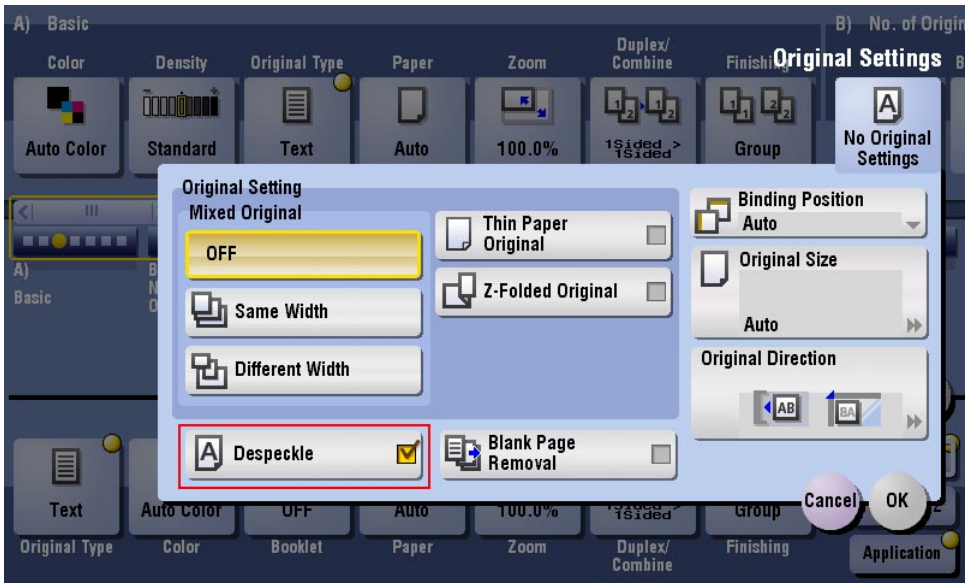

***2: Feed cleaning settings screen**

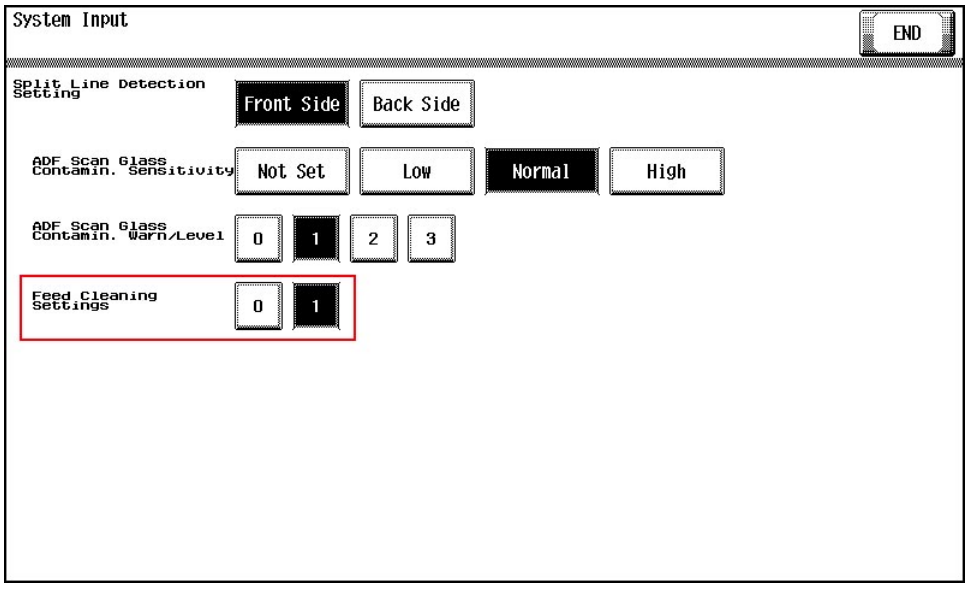

3.3.3 Document reading roll pressure/release control

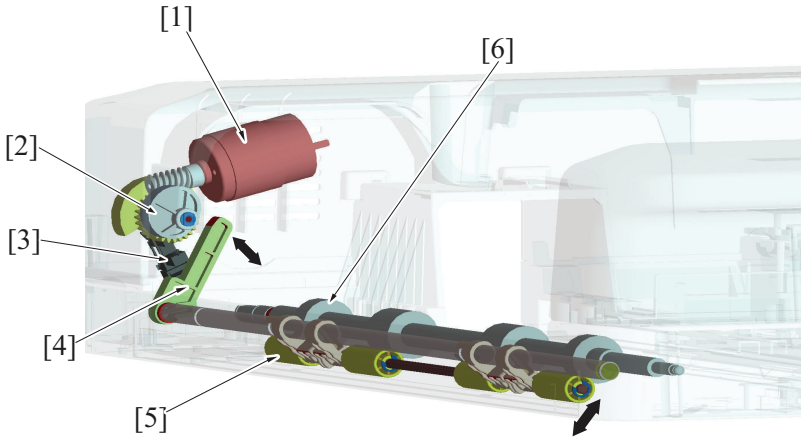

[1]	Reading roll release motor (M5)	[2]	Cam
[3]	Reading roll position sensor (PS11)	[4]	Lever
[5]	Reading roll	[6]	Document reading roller

- Rotation of the reading roll release motor drives the cam, which pushes the lever, so that the document reading roll is spaced apart from the document reading roller. Pressure and release positions are detected by the reading roll position sensor.

3.4 Document switchback/exit section

3.4.1 Document switchback/exit mechanism

- The original transported from the transport section will exit by the document reading roller/1, /2 and switchback exit roller.
- In the 2-sided mode, the switchback/exit roller is rotated backward and the original is fed to the registration roller again.
- The switchback/exit roller is driven by the document reading motor.

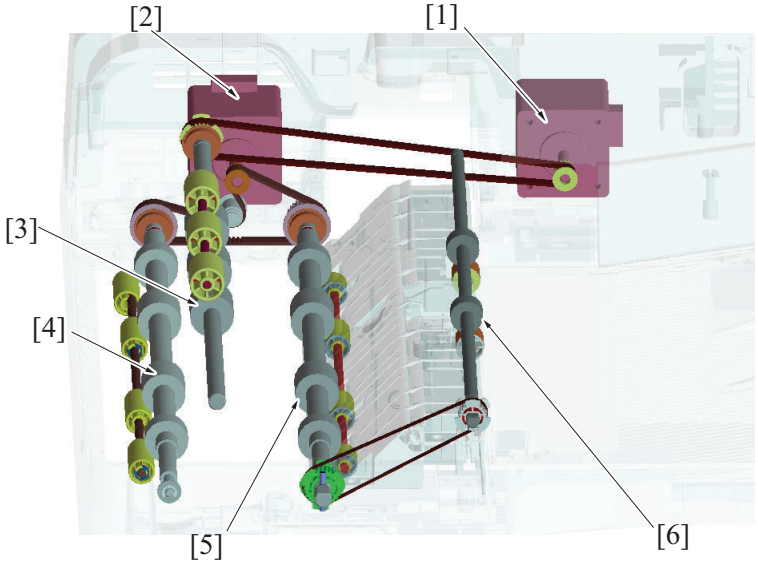

[1]	Registration motor (M3)	[2]	Document reading motor (M1)
[3]	Registration roller	[4]	Document reading roller/1
[5]	Document reading roller/2	[6]	Switchback/exit roller

3.4.2 Switching mechanism for document switchback/exit

(1) Document switchback section

- The switchback path switching guide film provides a route toward the switchback path.
- In the 2-sided mode, the switchback exit roller is rotated backward. This allows the trailing edge of the original to move along the upper side of the switchback path switching guide film to be fed to the switchback path, so that the original is fed to the registration roller.
- The switchback path switching guide film is fixed at all times.

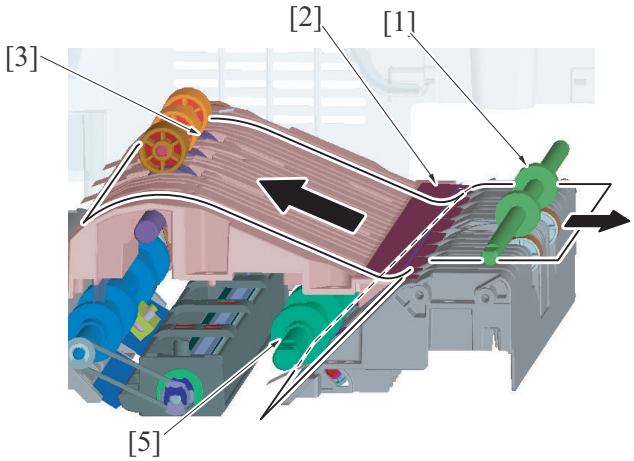

[1]	Switchback exit roller	[2]	Switchback path switching guide film
[3]	Registration roller	-	-

3.4.3 Switchback exit roll pressure/retraction control

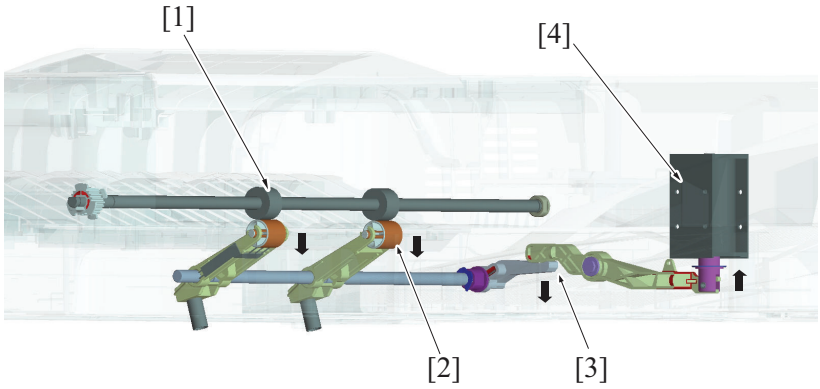

[1]	Document switchback exit roller	[2]	Document exit roll
[3]	Lever	[4]	Document exit roller release solenoid (SD1)

- Operation of the document exit roller release solenoid causes the lever to be pushed down and the document exit roll to be lowered, so that the document exit roll is spaced away from the document exit roller.
- This spacing operation is performed during switchback for reading of the back side of the originals and for putting pages in numerical order in the 2-sided mode.

3.4.4 Faxed document stamp function

- Mounting the optional “Stamp unit SP-501” allows a stamp to be placed on a faxed document.
- The stamp solenoid located upstream of the document exit roller is energized when the original is about to be fed out and the stamp mounted on the solenoid plunger is pressed against the surface of the original. This places a faxed mark (+) on the surface of the original.
- This function is enabled when “System2/Stamp/Set*1 (default setting: Unset)” is turned ON using the Service Mode and the user selects “Application/TX Stamp*2 (default setting: OFF)” on the “Scan/Fax” screen.
- This function is not used for “Copy” or “Scan”.

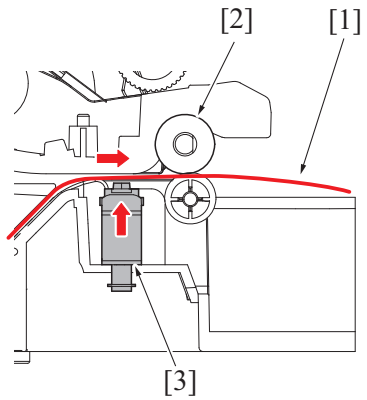

[1]	Original	[2]	Document switchback exit roller
[3]	Stamp unit (SP-501)	-	-

***1: Stamp mounting setting screen**

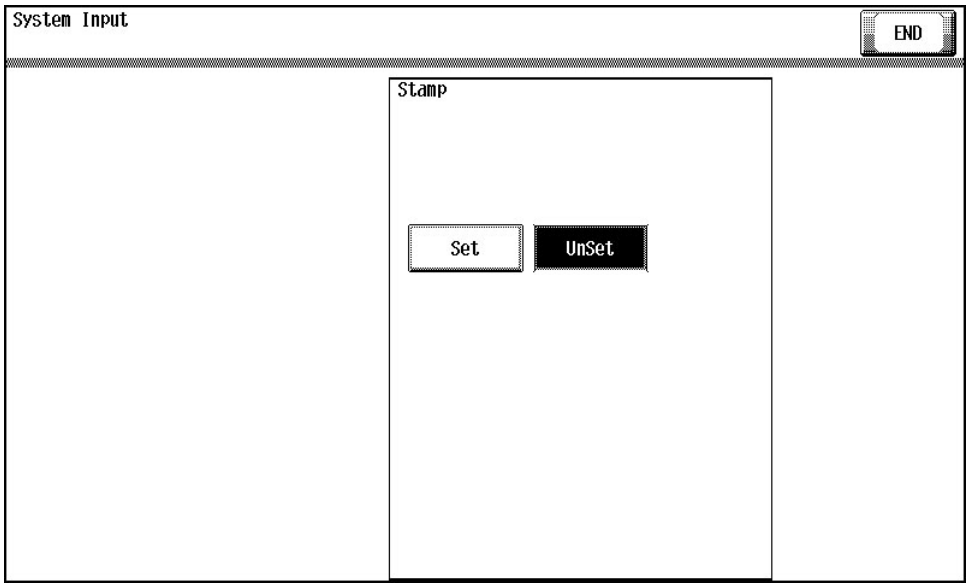

***2: TX Stamp setting screen**



3.5 Paper path operation

3.5.1 1-sided mode

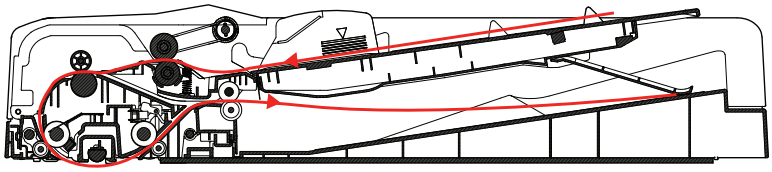

1. Pressing the start key will lower the document pick-up roller and press the original.
2. The document pick-up roller, document feed roller and document separation roller will start rotating to start feeding the first sheet of paper.
3. When the paper reaches the registration roller, a loop is formed in the paper. Then, the registration motor is started, so that the registration roller transports the paper.
4. The document feed motor is deenergized when a predetermined period of time elapses after the registration motor has been activated. The document reading motor will start running.
5. It starts reading from the leading edge of the original when the document reading sensor turned ON and the predetermined period of time has passed.
6. The document reading roll will be retracted right before the back edge of the original passes through the document reading roller/1. After a predetermined period of time, document reading roll will be pressed again to prepare for the next original.
7. The original will be exit by document reading roller/2 and the document exit roller.
8. All motors will turn OFF after the trailing edge of the original turns OFF the document exit sensor and the predetermined period of time is passed.

3.5.2 2-sided mode

1. In the same manner as in the 1-side mode, the first side of the original is read.

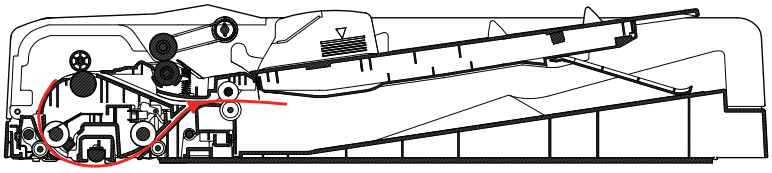

2. After the original moves past document reading roller/2, the document reading motor is rotated backward and the original is transported to the switchback section.

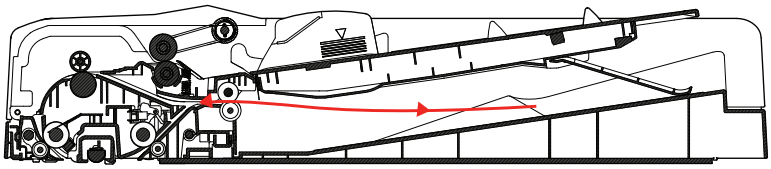

3. It starts reading from the leading edge of the original when the document reading sensor turned ON and the specified period of time has passed.

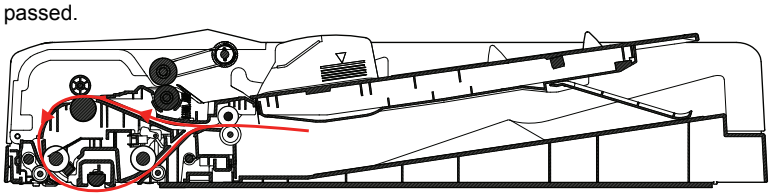

4. To ensure that the front and back sides of the originals are in correct order, the original undergoes the similar switchback operation again before being fed into the tray.

3.6 DF open/close detection mechanism

3.6.1 Document exchange detection control

- An angle detection mechanism is provided to detect the operation of exchanging originals when the DF is used as the original cover of the main body.
- When the DF is raised to an angle of about 14.5 degrees or more, the detection lever is pushed up by a spring. The angle sensor that has been blocked by the detection lever is now unblocked. It is, as a result, detected that the DF “is raised to an angle of 14.5 degrees or more”.
- When, on the other hand, the DF is lowered to an angle of about 14.5 degrees or less, the detection lever is pushed down. Then, the angle sensor, which has been unblocked, is blocked, so that it is detected that the DF “is lowered to an angle of 14.5 degrees or less”.
- When the DF state undergoes changes from a condition of being fully lowered to a condition of “being raised to an angle of 14.5 degrees or more” and then to a condition of “being lowered to an angle of 14.5 degrees or less”, it is determined that “an original is placed manually on the original glass”. Then the original size detection control will be started.

3.6.2 DF open/close detection

- The magnet is installed to detect the open/close statusof the DF on the main body side.
- The original cover sensor on the main body will turn ON by the magnet when lowering the DF.

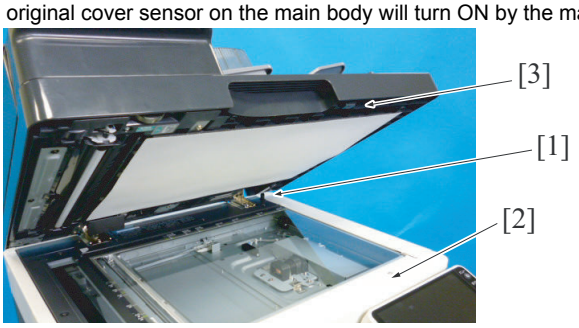

[1]	Angle sensor (PS202)	[2]	Original cover sensor (RS201)
[3]	Magnet	-	-

3.7 Cooling inside the unit mechanism

- The DF cooling fan motor functions to cool the inside of DF, DF control board, and document feed motor in the DF.
- It discharges heat generated inside the DF out through the exhaust port.

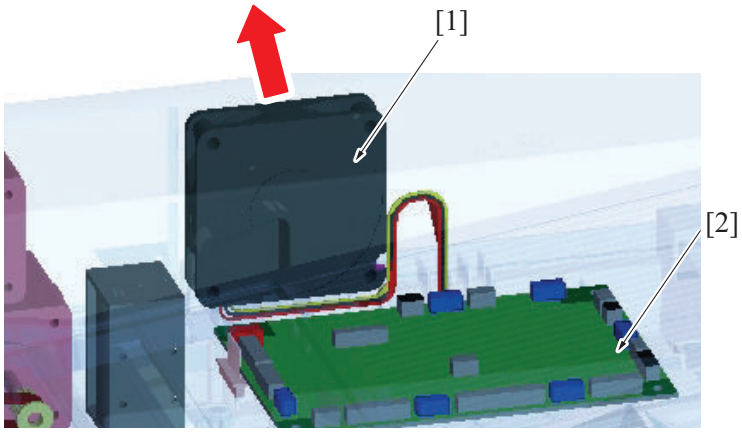

[1]	DF cooling fan motor (FM1)	[2]	DF control board (DFCB)

3.8 Document separation roller pressure switching mechanism

- As a solution to misfeed problems when they occur, the pressure of the document separation roller can be changed as necessary.
- Inserting a spacer into a space below the spring that applies pressure to the document separation roller will increase the pressure.
- The pressure may be set in two steps selectable according to the direction in which the spacer is inserted.
- The spacer is disposed beside the document separation roller.
- For details, see "I.18.1.3 Adjusting the pressure of the separation roller".

PB THEORY OF OPERATION DF-701

1. CONFIGURATION

1.1 Section configuration

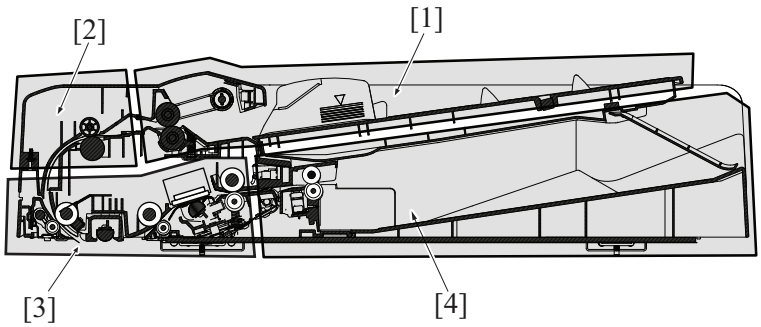

[1]	Document feed section	[2]	Document registration section
[3]	Document reading section	[4]	Document exit section

1.2 Paper path

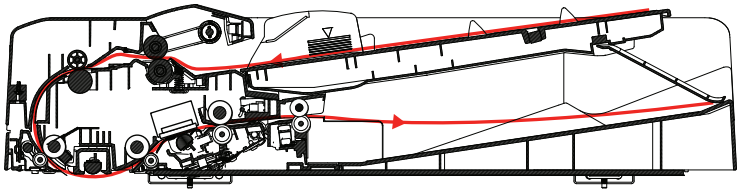

- The same paper path is established in the 1-sided mode and 2-sided mode.
- In 1-sided mode, the CCD at the scanner section reads the image of the original. In 2-sided mode, at the same timing as that when the front side of the original is read by the CCD at the scanner section, the CIS in the DF reads the back side of the original. The speed at which the original is read in the 2-sided mode is, therefore, the same that in the 1-sided mode.

1.3 Configuration

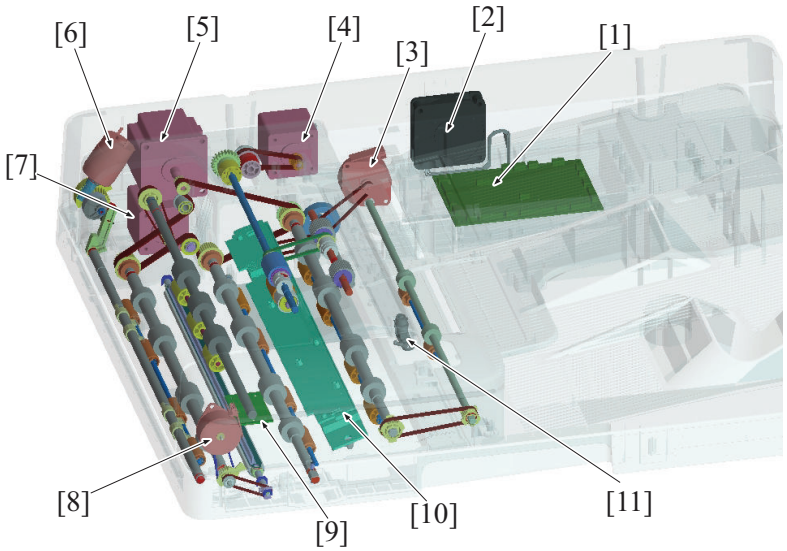

[1]	DF control board (DFCB)	[2]	DF cooling fan motor (FM1)
[3]	CIS cleaning motor (M5)	[4]	Document feed motor (M2)
[5]	Document reading motor (M1)	[6]	Reading roller release motor (M4)
[7]	Registration motor (M3)	[8]	Document reading glass cleaning motor (M6)
[9]	CIS power supply (CISPU)	[10]	CIS module (CIS)
[11]	Stamp unit (SP-501) * option	-	-

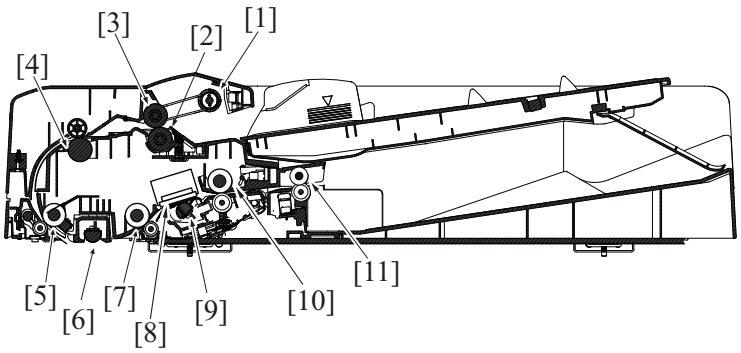

[1]	Document pick-up roller	[2]	Document separation roller
[3]	Document feed roller	[4]	Registration roller
[5]	Document reading roller/1	[6]	Document reading glass cleaning roller
[7]	Document reading roller/2	[8]	CIS module (CIS)
[9]	CIS cleaning brush	[10]	Document reading roller/3
[11]	Document exit roller	-	-

2. DRIVE

2.1 Paper feed drive

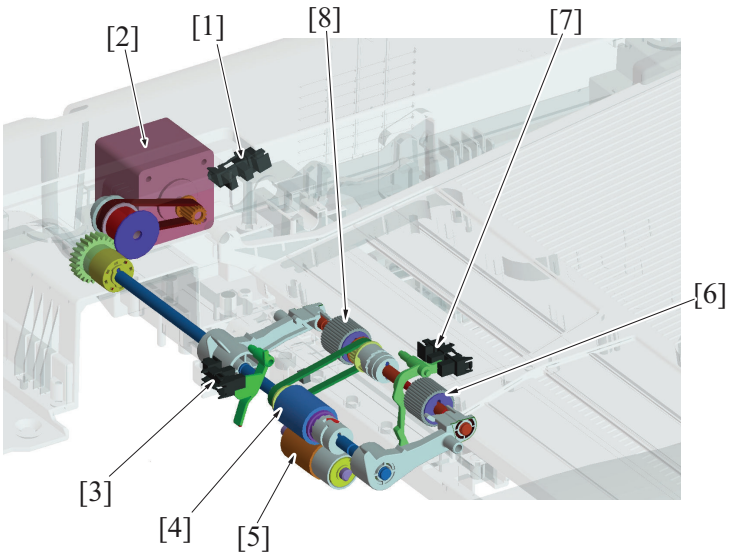

[1]	Upper door sensor (PS14)	[2]	Document feed motor (M2)
[3]	After separate sensor (PS2)	[4]	Document feed roller
[5]	Document separation roller	[6]	Document pick-up roller
[7]	Document empty sensor (PS1)	[8]	Document pick-up roller

- The document feed section consists of the document pick-up roller, document feed roller, as well as the document separation roller, and is directly driven by the document feed motor.
- When the start key is pressed, the document pick-up roller lowers to press the original, and the original is taken up and fed in. The original is transported to the registration roller by the document pick-up roller and document feed roller.
- After the take-up and feeding sequence, the document feed motor is rotated backward, which raises the document pick-up roller.

2.2 Registration drive

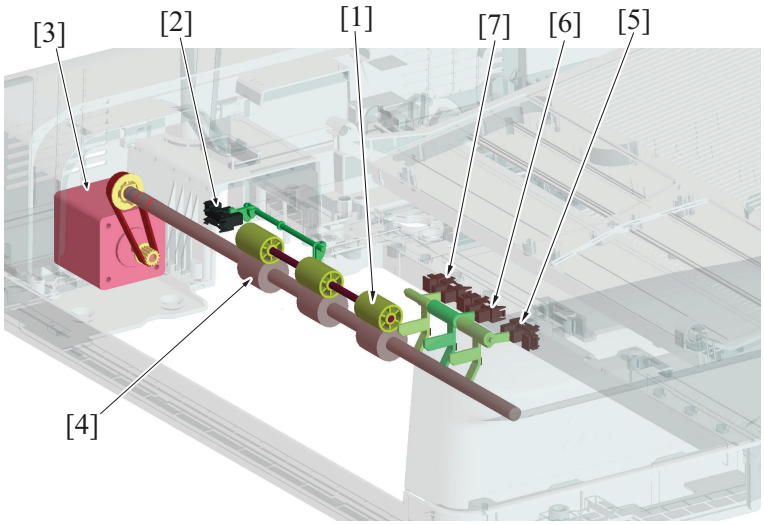

[1]	Registration roll	[2]	Registration sensor (PS3)
[3]	Registration motor (M3)	[4]	Registration roller
[5]	Mixed original sensor/3 (PS12)	[6]	Mixed original sensor/2 (PS11)
[7]	Mixed original sensor/1 (PS10)	-	-

- Timing at which to start transporting the original is controlled using the registration motor.
- The original is pressed against the registration roller and registration roll. This forms a loop in the original to thereby correct any skew in the original.
- Mixed original sensors/1, 2/, and 3/ detect width of the originals in the mixed original mode.

2.3 Document reading drive

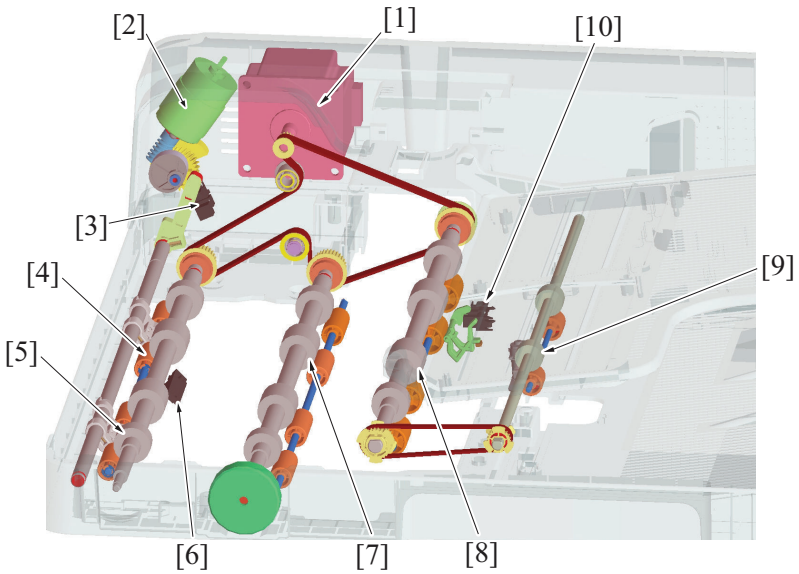

[1]	Document reading motor (M1)	[2]	Reading roller release motor (M4)
[3]	Reading roll position sensor (PS4)	[4]	Document reading roll
[5]	Document reading roller/1	[6]	Document reading sensor (PS6)
[7]	Document reading roller/2	[8]	Document reading roller/3
[9]	Document exit roller	[10]	Document exit sensor (PS5)

- The document reading motor drives the document reading section and document exit section.
- The document reading roll is equipped with a pressure/release mechanism. The pressure is released when the trailing edge of the original moves past the roller.

2.4 Document reading /CIS glass cleaning drive

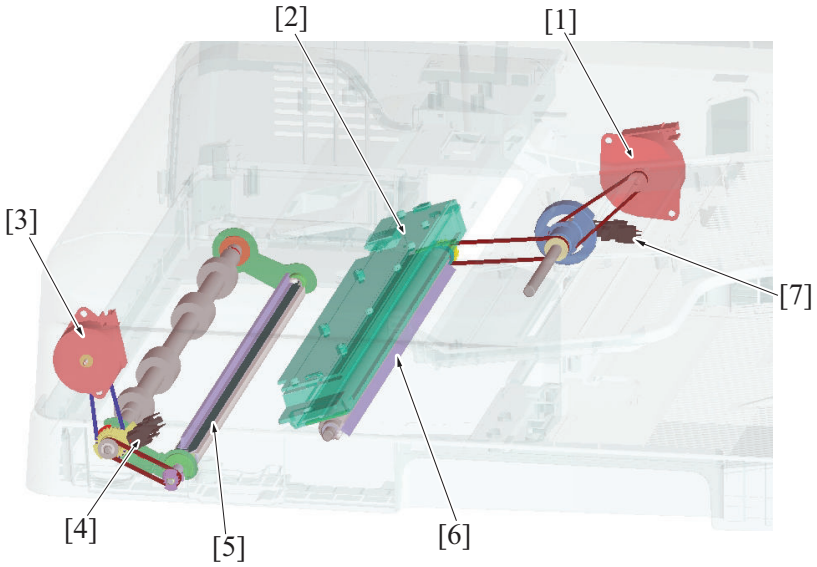

[1]	CIS cleaning motor (M5)	[2]	CIS module (CIS)
[3]	Document reading glass cleaning motor (M6)	[4]	Document reading glass cleaning sensor (PS13)
[5]	Document reading glass cleaning brush	[6]	CIS glass cleaning brush
[7]	CIS cleaning sensor (PS7)	-	-

- The document reading glass cleaning brush is rotated by the document reading glass cleaning motor and the glass surface is thereby cleaned.
- The CIS cleaning brush is rotated by the CIS cleaning motor and the CIS surface is thereby cleaned.
- The position of the cleaning brush is detected by the document reading glass cleaning sensor and the CIS cleaning sensor.

3. OPERATION

3.1 Document feed section

3.1.1 Document set/empty detection

- When an original is loaded on the document feed tray, the document empty sensor detects that there is original.
- If no original is loaded when the document pick-up roller is in the standby position, the actuator blocks the document empty sensor and it is detected that no original is loaded.
- When an original is loaded on the document feed tray, the leading edge of the original pushes the actuator so that the document empty sensor is unblocked. It is detected that an original is loaded.
- When all pages of the original are fed in, the document empty sensor detects that there is no original on the document feed tray.

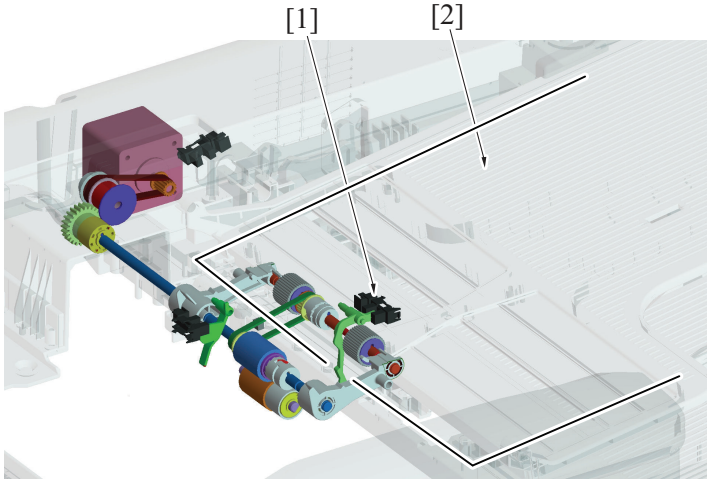

[1]	Document empty sensor (PS1)	[2]	Original

3.1.2 Document size detection mechanism

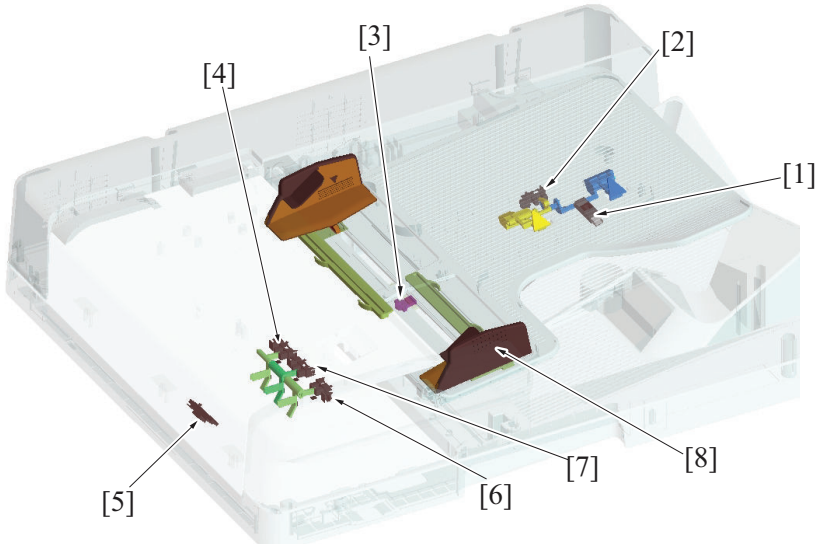

[1]	Document length sensor/2 (PS9)	[2]	Document length sensor/1 (PS8)
[3]	Document width sensor (VR1)	[4]	Mixed original sensor/1 (PS10)
[5]	Document reading sensor (PS6)	[6]	Mixed original sensor/3 (PS12)
[7]	Mixed original sensor/2 (PS11)	[8]	Document width guide

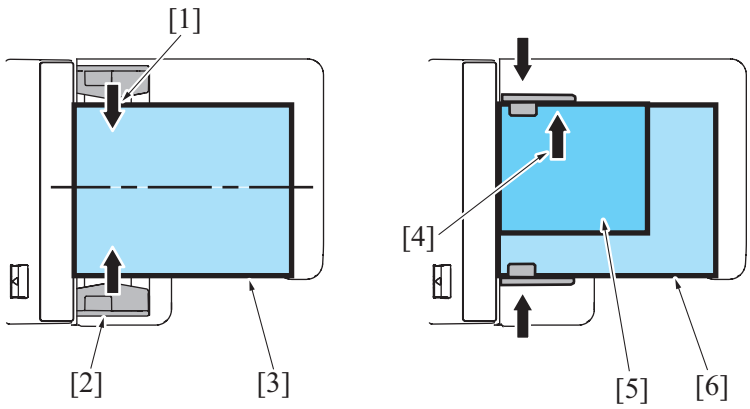

[1]	Adjust the document width guide plates (center alignment)	[2]	Document width guide plates
[3]	Original (standard mode)	[4]	Align the original with narrow width with the rear side of the document width guide plates (rear alignment)
[5]	Original with narrow width (mixed original mode)	[6]	Original with wide width (mixed original mode)

(1) Detecting the width of the original

- The width of the original is set on the document feed tray will be detected by the document width sensor.
- A variable resistor is incorporated in the document width size sensor. Its resistance value varies in association with the movement of the document width guide.
- The original is to be loaded in the document feed tray by aligning it with reference to the center of the document feed tray in the standard mode. In the mixed original mode, however, the original is aligned with reference to the rear side of the document width guide plates.

(2) Detecting the length of the original

- The length of the original is set on the document feed tray will be detected by the document length sensors/1 and /2.
- The document length sensor/1 is a transmission type, while document length sensor/2 is a reflection type. The document length sensor/1 is detected by two actuators, that is, actuator/1 and actuator/2.
- When the document feed tray is not loaded with any originals, document length sensor/1 is blocked. When an original is loaded and only actuator/1 is pressed, document length sensor/1 is unblocked. When both actuator/1 and actuator/2 are pressed, a blocked document length sensor/1 is detected by actuator/2.

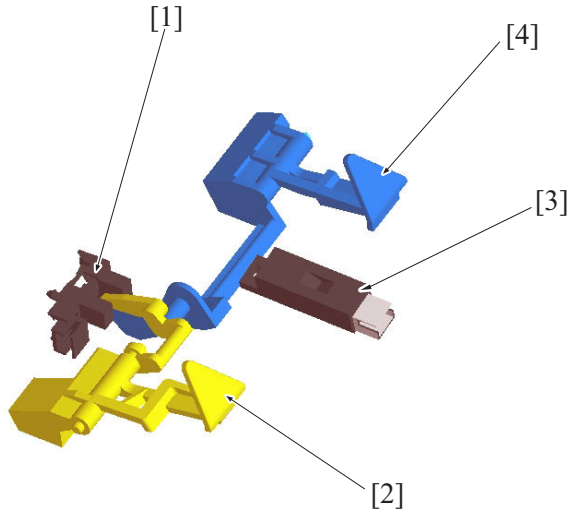

[1]	Document length sensor/1 (PS8)	[2]	Actuator/1
[3]	Document length sensor/2 (PS9)	[4]	Actuator/2

(3) Detecting the width of the original (in the mixed original/AMS mode)

- In the mixed original/AMS mode, no width is determined on the document feed tray; rather, the width is detected while the originals are being fed. Three mixed original sensors are disposed at positions immediately after the document feed section, functioning to detect the width of the original.

(4) Detecting the length of the original (in the mixed original/AMS mode)

- In the mixed original/AMS mode, no length is determined on the document feed tray; rather, the length of the original is calculated and determined based on the period of time during which the document reading sensor remains activated.

(5) Document feed tray size detection

- The original size is determined by the combination of the results of detection made of the width and length of the original.

Metric area

Document length sensor/2 (PS9)		OFF	OFF	Reflector	Reflector
Document length sensor/1 (PS8)		Blocked	Unblocked	Unblocked	Blocked
Document width sensor (VR1)	114.5	A6S	B5S	A4S	A3
	136	B6S	B5S	A4S	A3
	163	A5S	B5S	A4S	A3
	190.6	B5S	B5S	A4S	A3
	236.5	A5	Letter S	A4S	Foolscap
	266.2	B5	B4	B4	B4
	286.2	Letter	Ledger	Ledger	Ledger
	(307)	A4	A3	A3	A3

Inch area

Document length sensor/2 (PS9)		OFF	OFF	Reflector	Reflector
Document length sensor/1 (PS8)		Blocked	Unblocked	Unblocked	Blocked
Document width sensor (VR1)	158.7	Invoice S	Letter S	Legal	Ledger
	194	B5S	B5S	Legal	Ledger
	236.5	Invoice	Letter S	A4S	Legal
	266.2	B5	B4	B4	B4
	286.2	Letter	Ledger	Ledger	Ledger
	(307)	A4	A3	A3	A3

8K/16K

Document length sensor/2 (PS9)		OFF	OFF	Reflector	Reflector
Document length sensor/1 (PS8)		Blocked	Unblocked	Unblocked	Blocked
Document width sensor (VR1)	114.5	A6S	16KS	A4S	A3
	136	B6S	16KS	A4S	A3
	169.5	A5S	16KS	A4S	A3
	202.5	A5	16KS	A4S	A3
	243	A5	16KS	A4S	A3
	281.5	16K	8K	8K	8K
	(307)	A4	A3	A3	A3

3.1.3 Pick-up roller up/down control

(1) Up control

- When a job is completed, the document feed motor starts rotating backward. Then, the swing arm mounted on the same shaft as the document feed roller, is rotated backward to thereby raise the document pick-up roller to the standby position.
- The document pick-up roller is fixed at the raised position by a torque limiter of the paper drive section.
- When the swing arm is raised to the standby position, the document stopper is lowered by its own weight and fixed by the lock pawl of the swing arm. The document stopper is unlocked when the swing arm lowers.
- The document stopper has two functions: one, to align the leading edges of the originals loaded in the standby state; and, two, to prevent the leading edge of the original from advancing over the pick-up position into the feed section.

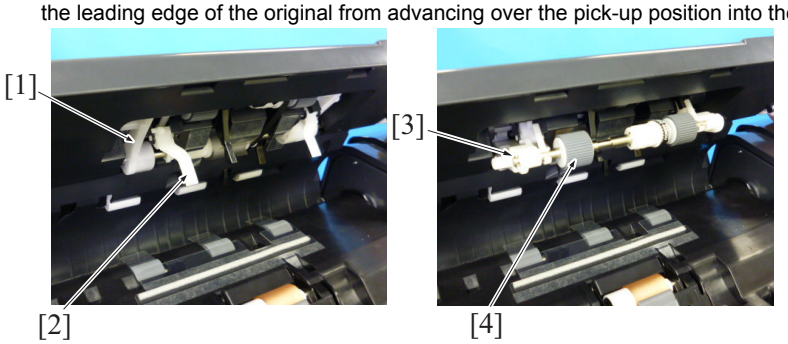

[1]	Swing arm (standby position)	[2]	Document stopper
[3]	Swing arm (feed position)	[4]	Document pick-up roller

(2) Down control

- When the start key is pressed, the document feed motor starts rotating forward. The rotation shaft of the swing arm mounted on the same shaft as the document feed roller, is rotated forward so that the document pick-up roller is lowered to the feed position.
- The document stopper is unlocked when the swing arm lowers.

3.1.4 Document feed/separation control

- When the start key is pressed, the document feed motor starts rotating forward, so that the document feed roller rotates forward.

- The rotation shaft of the swing arm mounted on the same shaft as the document feed roller is rotated forward, so that the document pick-up roller is lowered to the feed position. The document pick-up roller is rotated by a drive belt to thereby feed the original onto the document feed roller.

(1) Separation/feed operation

1. The document separation roller is pressed up against, and driven by, the document feed roller. A torque limiter is mounted on the shaft of the document separation roller.
2. The acting pressure of the document feed roller/document separation roller/torque limiter serves as the limit torque for preventing double feed.
3. When there is no original or only one sheet of original between the document separation roller and the document feed roller, the limit torque is exceeded and the separation roller follows the rotation of the document feed roller.
4. If there are two or more sheets of original between the original separation roller and the document feed roller, the limit torque is greater than the friction force of the original, so that the document separation roller stops rotating.
5. Because of the stationary document separation roller, the lower sheet of original in contact with the separation roller is not fed in, so that the first sheet of original is original separated from the second sheet of original.

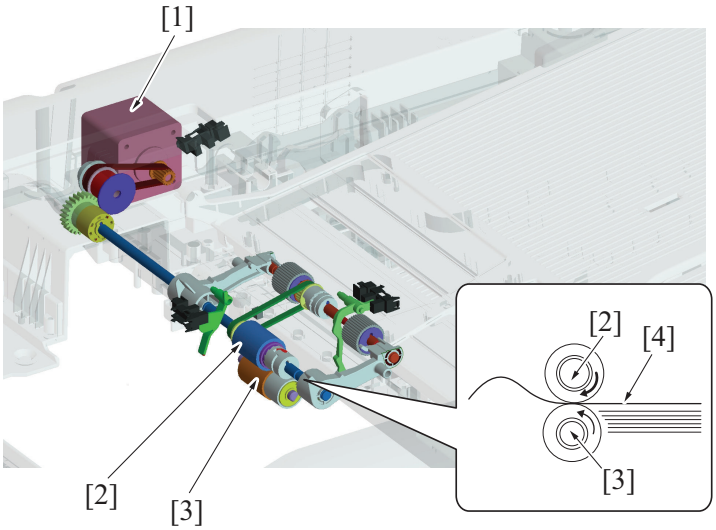

[1]	Document feed motor (M2)	[2]	Document feed roller
[3]	Document separation roller	[4]	Original

(2) Periodically replaced parts

- The document pick-up roller, document feed roller, and document separation roller are periodically replaced parts. These three rollers must be replaced with new ones at the same time.
- None of the document pick-up rollers, document feed rollers, and document separation roller are provided with a new article detection mechanism. When the three rollers are replaced with new ones, the “ADF Feed” counter must be reset to zero using “Counter/ Life” of the Service Mode.
- The number of times the DF has been subjected to paper feed operations can be checked with the “ADF Feed” counter of the Service Mode.

Periodical replacement cycle	Paper feed operations 200,000 times

- For details of the applicable replacement procedures for the document pick-up roller, document feed roller, and document separation roller and the Service Mode, see “F.7.1.3 Replacing the pick-up roller/feed roller” and “F.7.1.4 Replacing the separation roller assy.”

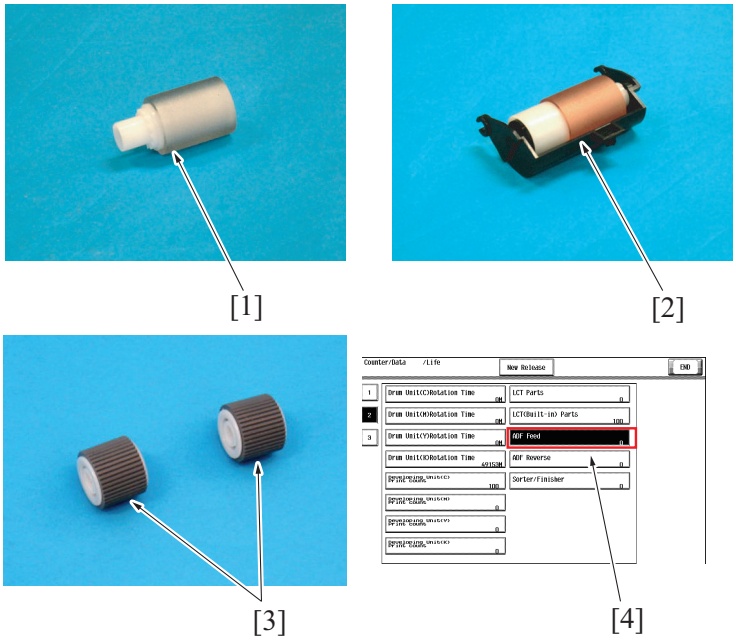

[1]	Document feed roller	[2]	Document separation roller assy
[3]	Document pick-up roller	[4]	Service Mode/Counter reset screen

3.2 Document registration section

3.2.1 Document registration outline

- The registration motor provides the drive for the registration roller.
- The original will create a loop between the document feed roller and the registration roller when the original is being conveyed in order to correct the skew.

3.2.2 Document registration loop formation process

1. The registration sensor detects the leading edge of the original.
2. The registration roller remains stationary.
3. Because the document feed roller continues rotating to feed the original, a loop is formed at the leading edge of the original.
4. The loop corrects skew in the original.
5. The registration roller is started to rotate to transport the original.

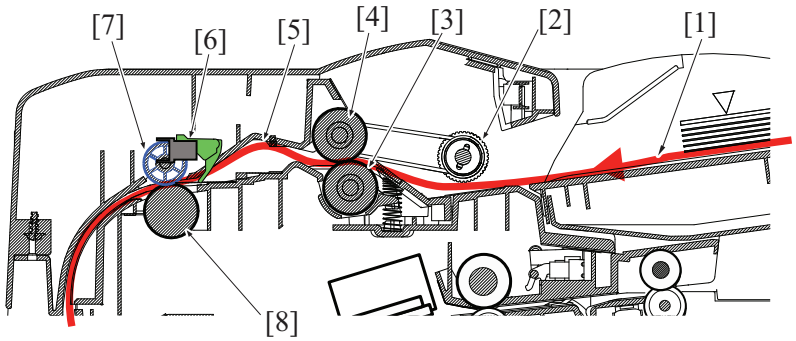

[1]	Original	[2]	Document pick-up roller
[3]	Document separation roller	[4]	Document feed roller
[5]	Loop formation	[6]	Registration sensor (PS3)
[7]	Registration roll	[8]	Registration roller

3.3 Document reading section

3.3.1 Document reading section

- The document reading motor provides the drive for document reading roller/1/2/3, and the document exit roller.
- The original transported from the document registration section will be transported to the document exit section by document reading roller/1/2/3, and the document exit roller.
- When the leading edge of the original moves past the document reading roller/1, the document reading sensor (reflector type) disposed downstream of the roller detects the original. The length of the original is also detected based on the period of time during which the sensor remains activated.

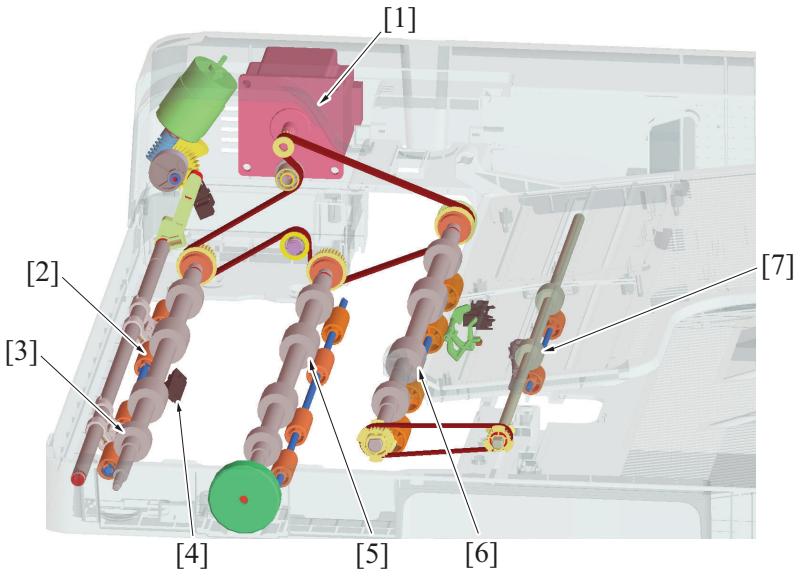

[1]	Document reading motor (M1)	[2]	Document reading roll
[3]	Document reading roller/1	[4]	Document reading sensor (PS6)
[5]	Document reading roller/2	[6]	Document reading roller/3
[7]	Document exit roller	-	-

3.3.2 Document reading roll pressure/release control

- When the trailing edge of the original moves past document reading roller/1, document reading roller/1 acts to push the original, so that the document transport speed increases instantaneously. This results in an image being read unevenly. (Fluctuations in the document transport speed)
  To prevent this problem from occurring, the document reading roll is released using the reading roller release motor. When the document reading roll is released, no thrust force is transmitted to the original.
- After the document reading roll is released, the original is transported only by rollers locating downstream of a reading position.

(1) Pressure/release operation

- When the reading roller release motor is energized, the pressure/release gear is rotated and the cam mounted on the same shaft as the pressure/release gear is rotated.
- Then, the cam pushes down the rotation shaft of the document reading roll, so that the document reading roll is released from the document reading roller.
- The pressure/release gear is provided with a semi-circular light blocking plate. When the gear rotates a half turn, the reading roll position sensor is unblocked and blocked. Then, a condition is detected in which the document reading roll is released. (Blocked: released; unblocked: pressed)

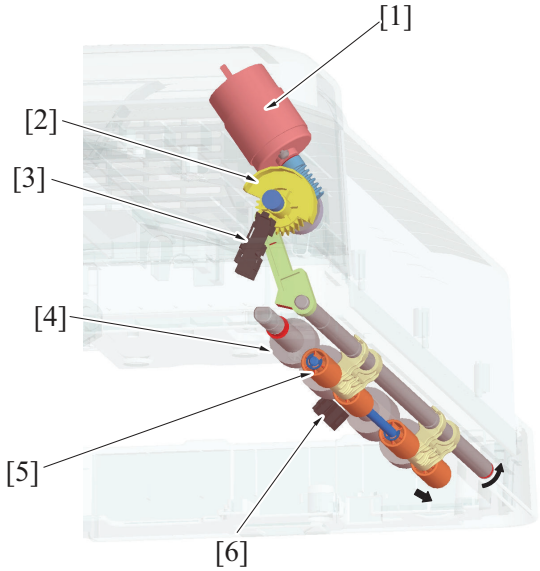

[1]	Reading roller release motor (M4)	[2]	Pressure/release gear
[3]	Reading roll position sensor (PS4)	[4]	Document reading roller/1
[5]	Document reading roll	[6]	Document reading sensor (PS6)

3.3.3 Document reading glass cleaning mechanism

(1) DF original glass cleaning

- A line can occur in the image read from the original if the DF original glass is contaminated with dust or dirt. The DF original glass cleaning mechanism prevents this fault from occurring.
- A half face of the document reading glass cleaning roller is provided with the document reading glass cleaning brush. While the original is being read, the document reading glass cleaning brush faces up. When the DF original glass is to be cleaned, the document reading glass cleaning roller rotates, so that the document reading glass cleaning brush faces the DF original glass.
- The document reading glass cleaning roller rotates to remove dust sticking to the DF original glass.
- The document reading glass cleaning roller is rotated by the document reading glass cleaning motor. During cleaning, the document reading glass cleaning roller rotates forward (counterclockwise in the illustration) and, when the job is completed, it rotates backward (clockwise in the illustration).
- The drive coupling gear is provided with a light blocking plate. As the gear rotates, the document reading glass cleaning sensor is unblocked and blocked. This detects the document reading glass cleaning brush at its home position. (Unblocked: original reading position; Blocked: home position)

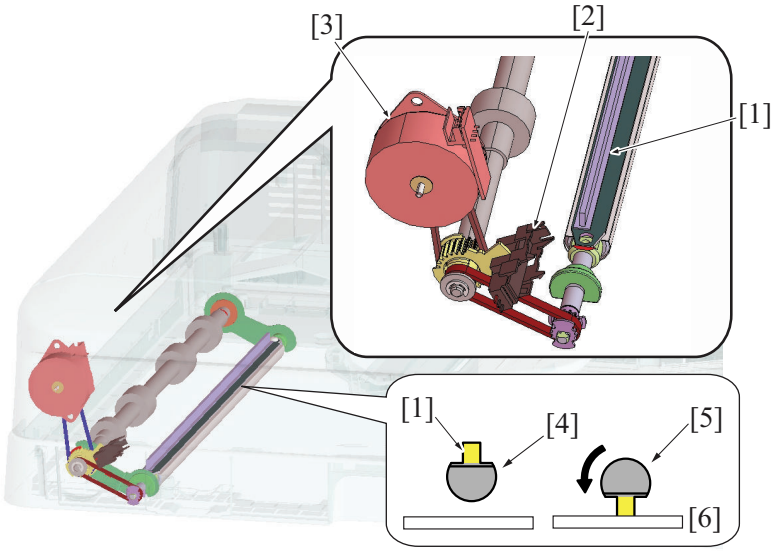

[1]	Document reading glass cleaning brush	[2]	Document reading glass cleaning sensor (PS13)
[3]	Document reading glass cleaning motor (M6)	[4]	Document reading glass cleaning roller (home position)
[5]	Document reading glass cleaning roller (cleaning position)	[6]	DF original glass

(2) DF original glass cleaning operation

Condition		Cleaning operation
Predrive	Power ON	Rotates the document reading glass cleaning brush one complete turn to check for its correct operation. (forward rotation)
	Existing from sleep	
Start key ON	Before starting reading	Rotates the document reading glass cleaning brush one complete turn to perform cleaning. (forward rotation: default setting)
	During reading	Rotates the document reading glass cleaning brush one complete turn to perform cleaning for every two originals during continuous reading of originals. (forward rotation)
		Rotates the document reading glass cleaning brush three complete turns to perform cleaning for each original during continuous reading of originals, if [Original Settings] -> [Despeckle] *1 is selected. (forward rotation) Because the document reading glass cleaning brush is rotated three complete turns to perform the cleaning, however, the original-to-original distance is widened than at normal timing. This results in reduced productivity in reading the originals.
		No original glass cleaning sequence is performed between originals during continuous reading of originals, if [System2] -> [ADF Scan Glass Contamin. Set.] -> [Feed Cleaning Settings] -> [0] *2 is selected in the Service Mode.
	After completing reading last original	The document reading glass cleaning brush tends to curl if repeatedly operated in one direction only, resulting in poor cleaning performance. To straighten the brush, it is rotated one complete turn in the backward direction when reading of the last original is completed. (backward rotation)

***1: Despeckle mode setting screen**

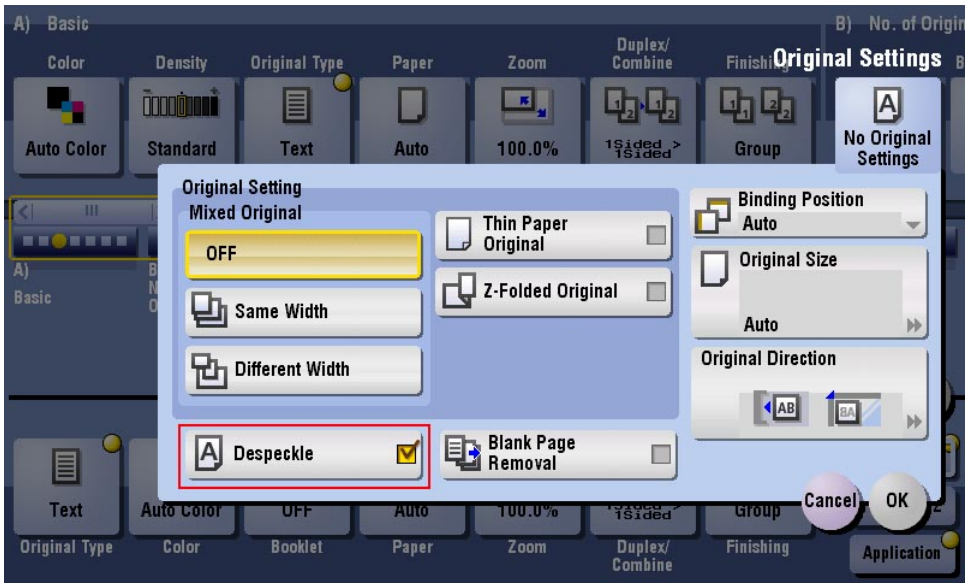

***2: Feed cleaning settings screen**

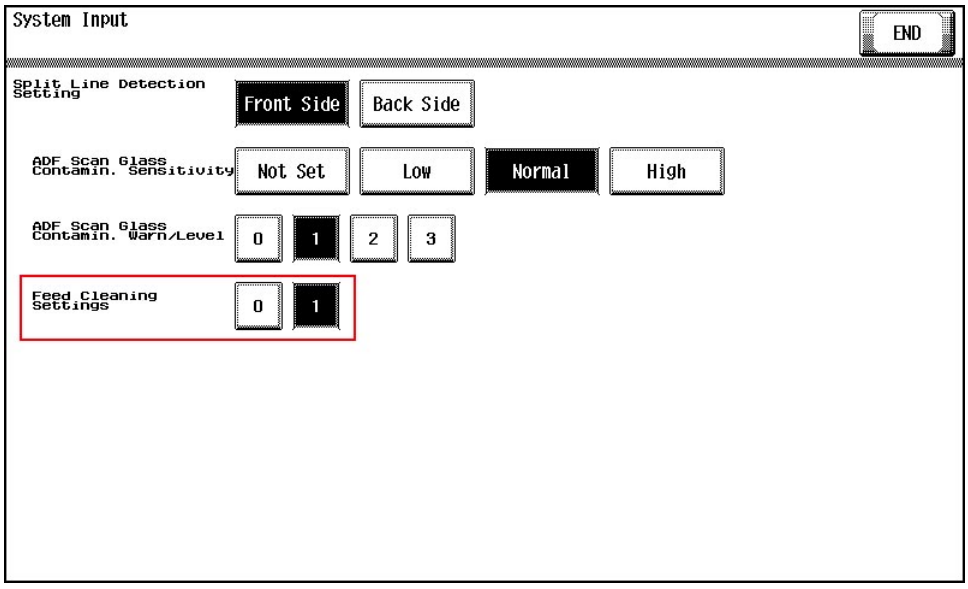

3.3.4 CIS original reading control

- The back side of the original is read by the CIS (contact image sensor) module. The image data read by the CIS is transferred to the main body.
- The CIS original reading section consists of the CIS module and CIS power supply.
- The light source of CIS module has used LED.

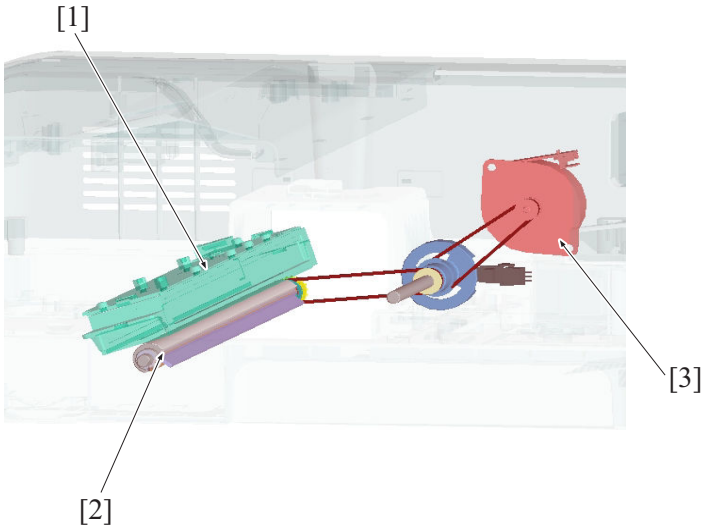

[1]	CIS module (CIS)	[2]	Cleaning brush
[3]	CIS cleaning motor (M5)	-	-

- A cleaning brush to which a white plate is affixed is disposed on the side opposite the CIS module.
- “Document passage” is performed at the home position.
- “Shading correction”, “gain adjustment”, and “ADF Scan Glass Contamin. Sensitivity” are made using the shading surface.

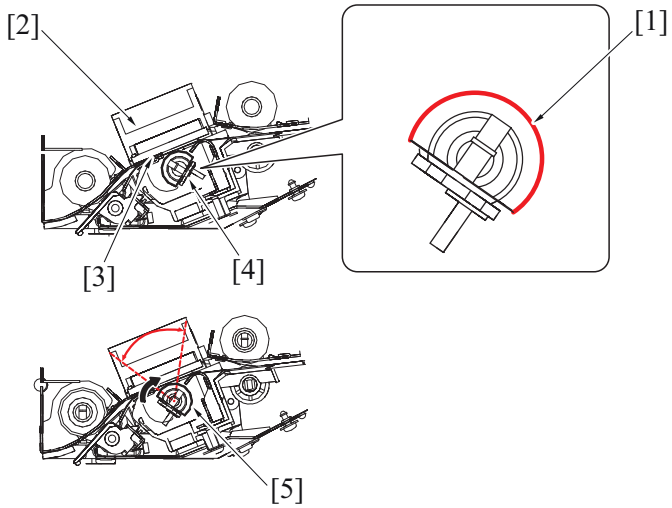

[1]	White plate affixed	[2]	CIS module (CIS)
[3]	CIS glass	[4]	Cleaning brush (Home position)
[5]	Cleaning brush (Shading correction surface)	-	-

3.3.5 CIS control when power is turned ON

1. The LEDs of CIS are turned ON.
2. The cleaning brush is detected at its home position.
3. The cleaning brush is rotated and brought to a stop at the gain adjustment position.
   The gain adjustment is made twice with the cleaning brush at that position.
4. After the adjustments, the LEDs are turned OFF.
5. The cleaning brush is rotated and brought to a stop at the home position.

* The same control is performed when the main body exits from the sleep mode.

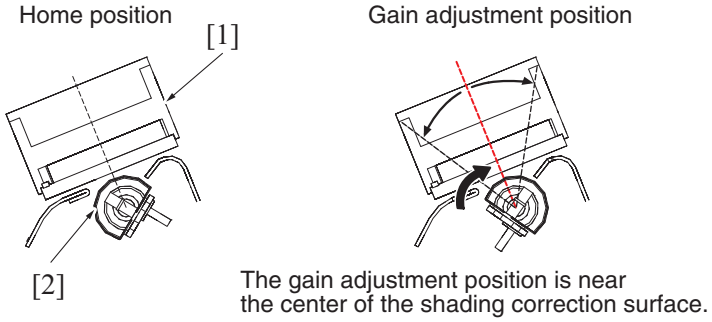

[1]	CIS module (CIS)	[2]	Cleaning brush

3.3.6 CIS control when the document is loaded

1. The cleaning brush is detected at its home position.
2. The LEDs of CIS are turned ON.
3. The cleaning brush is rotated one complete turn.
4. The LEDs are turned OFF.
5. The cleaning brush is rotated and brought to a stop at the home position.

NOTE

- **No operation is performed when the document is loaded if the following function is selected using the service mode: [System 2] -> [ADF Scan Glass Contamin. Set.] -> [Back Side] -> [ADF Scan Glass Contamin. Sensitivity] -> [Not Set].**

3.3.7 CIS control when the start key is pressed

- This control is performed only in the 2-sided original reading mode.

(1) Before a print cycle / back side reading

1. The cleaning brush is detected at its home position.
2. The LEDs of CIS are turned ON.
3. The cleaning brush is rotated three complete turns.
   The cleaning brush cleans the CIS glass during its first turn.
   The cleaning brush uses the shading correction surface to perform the shading correction during its second and third turn.
4. With the LEDs ON, the cleaning brush is brought to a stop at its home position (waiting for the original).
5. The back side of the original is read as the original moves over the CIS.

(2) During a print cycle (operation between originals after reading)

The brush cleaning operation is normally performed each time the original is read.
If a print cycle produces a large number of printed pages continuously, however, either the cleaning operation or the shading correction operation is performed.
The shading correction operation is performed at predetermined intervals during a multiprint cycle in order to maintain an appropriate shading correction value.

(a) Cleaning operation

1. The cleaning brush is rotated one complete turn.
   (The cleaning brush normally makes one turn, but makes three turns in the despeckle mode.)
2. With the LEDs ON, the cleaning brush is brought to a stop at its home position (waiting for the original).

(b) Shading correction operation

1. The cleaning brush is rotated three complete turns.
   The cleaning brush cleans the CIS glass during its first turn.
   The cleaning brush uses the shading correction surface to perform the shading correction during its second and third turn.
   The shading correction is performed (a total of two times).
2. With the LEDs ON, the cleaning brush is brought to a stop at its home position (waiting for the original).

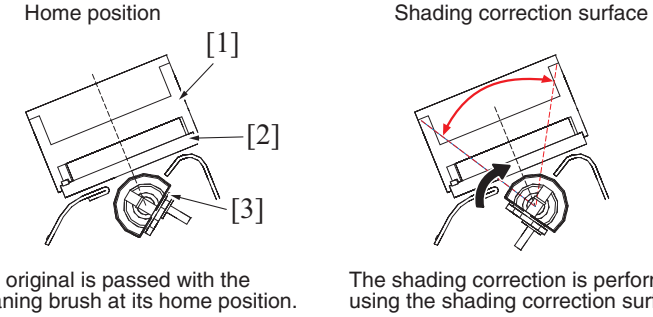

[1]	CIS module (CIS)	[2]	CIS glass
[3]	Cleaning brush	-	-

(c) After the print cycle

1. After the reading sequence, the LEDs are turned OFF.
2. The cleaning brush is turned backward (to tame the brush).
3. The cleaning brush is brought to a stop when its home position is detected.
4. The cleaning brush perform “ADF Scan Glass Contamin. Sensitivity”.
   - The LEDs are turned ON. The cleaning brush is rotated four complete turns.
   - The cleaning brush cleans the CIS glass during its first turn.
   - The cleaning brush uses the shading correction surface to perform the shading correction during its second and third turn. The shading correction is performed (a total of twice).
   - The cleaning brush uses the shading correction surface to perform “ADF Scan Glass Contamin. Sensitivity” during its fourth turn.
   - The cleaning brush is brought to a stop at its home position.
   - The LEDs are turned OFF.

NOTE

- **Steps of 4 is not performed if the following function is selected using the service mode: [System 2] -> [ADF Scan Glass Contamin. Set.] -> [Back Side] -> [ADF Scan Glass Contamin. Sensitivity] -> [Not Set].**

3.3.8 CIS glass contamination prevention control

(1) CIS glass cleaning

- The CIS glass is cleaned only when two sides of the original are to be read.
- When the back side cleaning motor is energized, the cleaning brush is rotated to remove dust and dirt from the surface of the CIS glass.
- Cleaning of the front side takes place at timing different from that of cleaning of the back side and the cleaning of the back side sources its power drive differently from the front side.
- The cleaning brush at its home position is detected by the CIS cleaning sensor.
- For more details, see “PB.3.3.7 CIS control when the start key is pressed”.

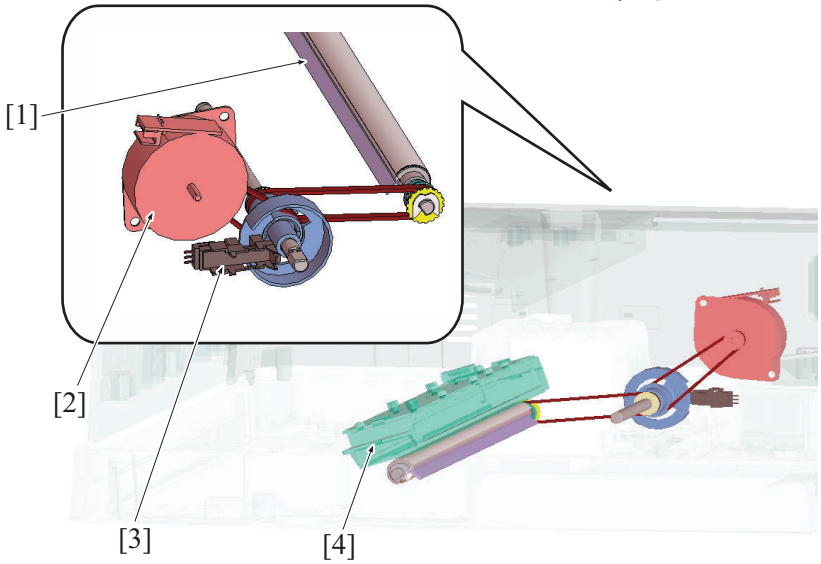

[1]	Cleaning brush	[2]	CIS cleaning motor (M5)
[3]	CIS cleaning sensor (PS7)	[4]	CIS module (CIS)

3.3.9 CIS cover

- During a misfeed clearing procedure, the CIS cover can be opened by releasing the lever.
- The CIS cover sensor is unblocked when the lever is released.

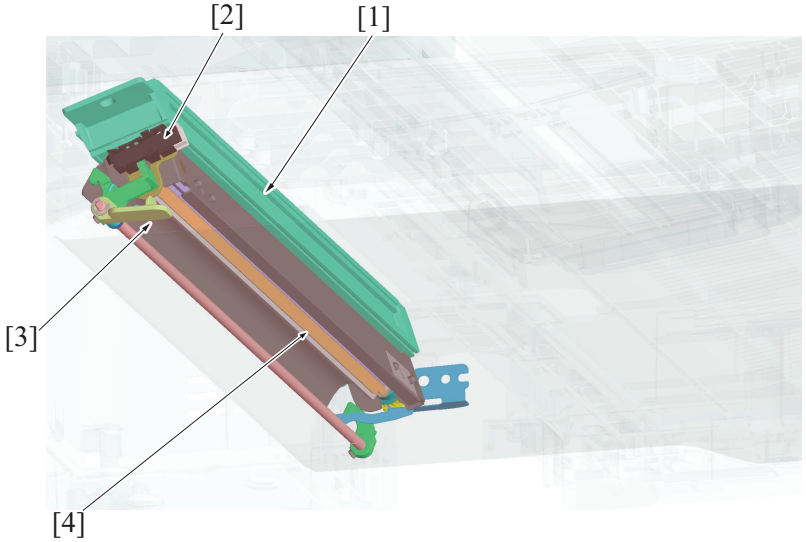

[1]	CIS module (CIS)	[2]	CIS cover sensor (PS15)

[3]	Lever	[4]	CIS cleaning roller

3.4 Document exit section

3.4.1 Document exit mechanism

- The document reading motor provides the drive for the document exit roller. (the same drive source as that for the document reading section)
- As the document exit roller rotates forward, the original fed off from the document reading section is fed into the document exit tray.
- The original is exited to be detected by the document exit sensor.

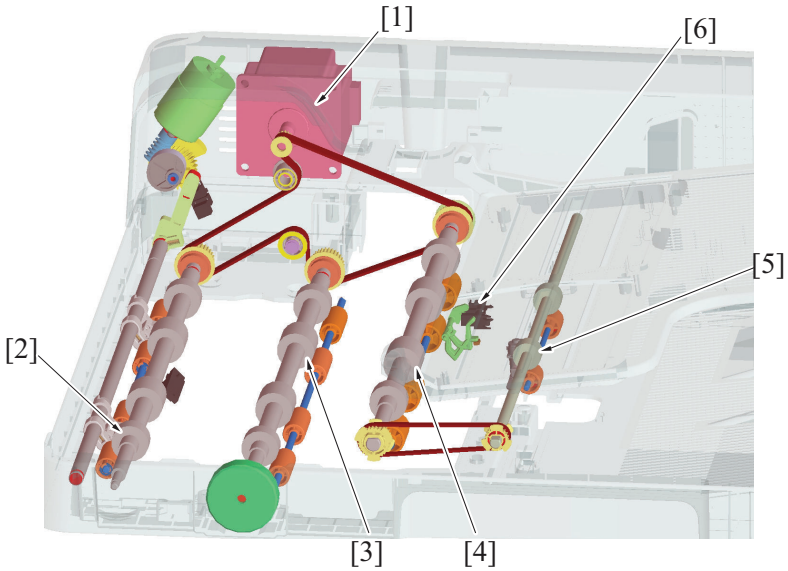

[1]	Document reading motor (M1)	[2]	Document reading roller/1
[3]	Document reading roller/2	[4]	Document reading roller/3
[5]	Document exit roller	[6]	Document exit sensor (PS5)

3.4.2 Faxed document stamp function

- Mounting the optional “Stamp unit SP-501” allows a stamp to be placed on a faxed document.
- The stamp solenoid located upstream of the document exit roller is energized when the original is about to be fed out and the stamp mounted on the solenoid plunger is pressed against the surface of the original. This places a faxed mark (+) on the surface of the original.
- This function is enabled when “System2/Stamp/Set*1 (default setting: Unset)” is turned ON using the Service Mode and the user selects “Application/TX Stamp*2 (default setting: OFF)” on the “Scan/Fax” screen.
- This function is not used for “Copy” or “Scan”.

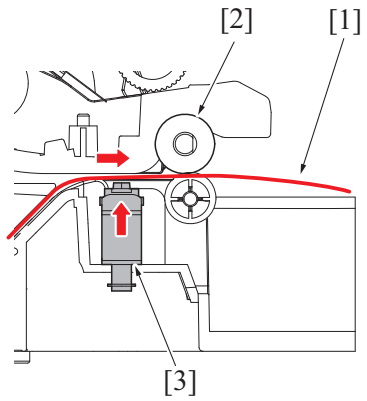

[1]	Original	[2]	Document switchback exit roller
[3]	Stamp unit (SP-501)	-	-

***1: Stamp mounting setting screen**

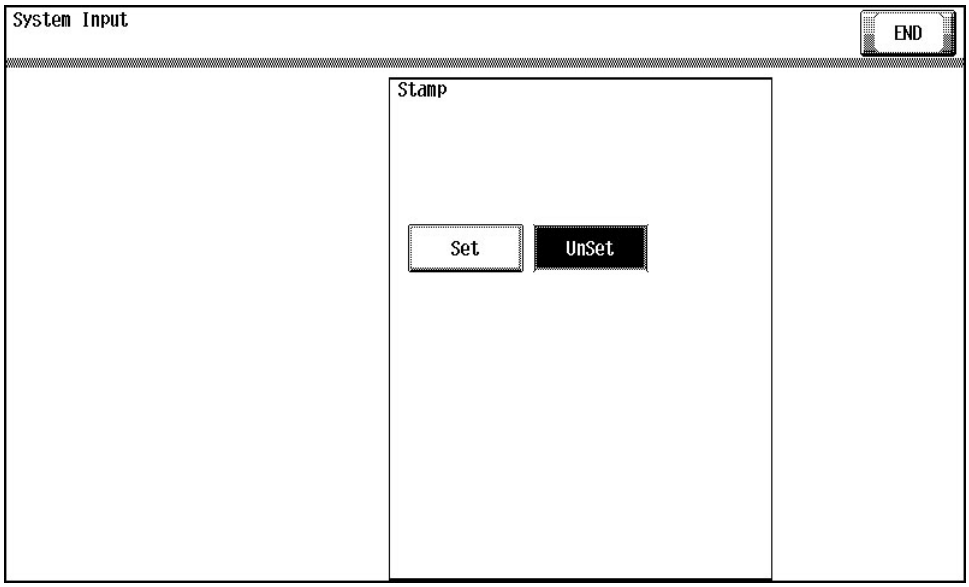

***2: TX Stamp setting screen**



3.5 Paper path operation

Reading of the back side of the original by the CIS is not done in the 1-sided mode. All other paper feed operations in the 1-sided mode are the same as those in the 2-sided mode.

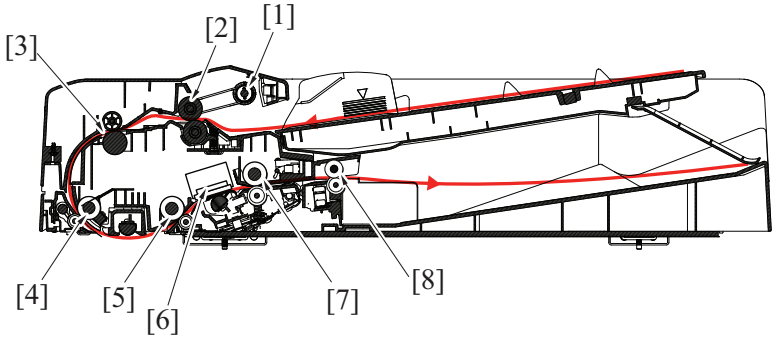

[1]	Document Pick-up roller	[2]	Document feed roller
[3]	Registration roller	[4]	Document reading roller/1
[5]	Document reading roller/2	[6]	CIS module (CIS)
[7]	Document reading roller/3	[8]	Document exit roller

1. When the original is set, the document empty sensor detects the leading edge of the original.
2. Pressing the start key will lower the document pick-up roller and the document reading roller/1 will be pressed.
3. The document feed motor is energized, and the document pick-up roller and document feed roller are rotated to start feeding the first original.
4. When the registration sensor detects the leading edge of the original, a loop is formed in the original.

5. After the loop has been formed in the original, the registration motor is energized. The drive of the registration motor rotates the registration roller, so that the original is transported onto the reading section.
6. The document reading motor is energized after the lapse of a predetermined period of time after the registration motor has been energized. The drive of the document reading motor rotates document reading roller/1, document reading roller/2, document reading roller/3, and document exit roller.
7. After the lapse of a predetermined period of time after the document reading sensor has detected the leading edge of the original, reading of the front side of the original is started by the scanner.
8. The document reading roller/1 is retracted immediately before the trailing edge of the original moves past document reading roller/1. The document reading roller/1 in the retracted position is pressed again as soon as the trailing edge of the original moves past the front side reading position so as to be prepared for the next original.
9. When the leading edge of the original moves past the document reading roller/2, reading of the back side of the original is started by the CIS. (Reading of the back side of the original is done only in the 2-sided mode.)
10. The document reading roller/3 is driven to transport the original onto the document exit section.
11. The document exit roller is driven to feed the original out.
12. The document reading motor is deenergized after the lapse of a predetermined period of time after the trailing edge of the original has deactivated the document exit sensor.

3.6 DF open/close detection mechanism

3.6.1 Document exchange detection control

- An angle detection mechanism is provided to detect the operation of exchanging originals when the DF is used as the original cover of the main body.
- When the DF is raised to an angle of about 14.5 degrees or more, the detection lever is pushed up by a spring. The angle sensor that has been blocked by the detection lever is now unblocked. It is, as a result, detected that the DF “is raised to an angle of 14.5 degrees or more”.
- When, on the other hand, the DF is lowered to an angle of about 14.5 degrees or less, the detection lever is pushed down. Then, the angle sensor, which has been unblocked, is blocked, so that it is detected that the DF “is lowered to an angle of 14.5 degrees or less”.
- When the DF state undergoes changes from a condition of being fully lowered to a condition of “being raised to an angle of 14.5 degrees or more” and then to a condition of “being lowered to an angle of 14.5 degrees or less”, it is determined that “an original is placed manually on the original glass”. Then the original size detection control will be started.

3.6.2 DF open/close detection

- The magnet is installed to detect the open/close status of the DF on the main body side.
- The original cover sensor on the main body will turn ON by the magnet when lowering the DF.

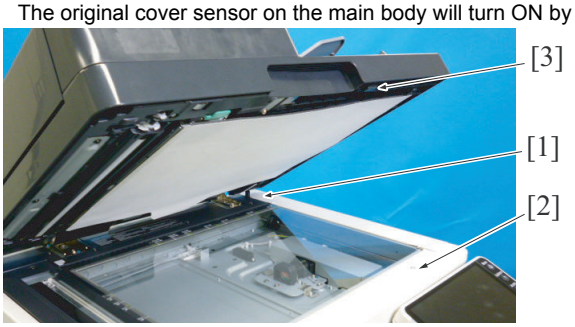

[1]	Angle sensor (PS202)	[2]	Original cover sensor (RS201)
[3]	Magnet	-	

3.7 Cooling inside the unit mechanism

- The DF cooling fan motor functions to cool the inside of DF, DF control board, and document feed motor in the DF.
- It discharges heat generated inside the DF out through the exhaust port.

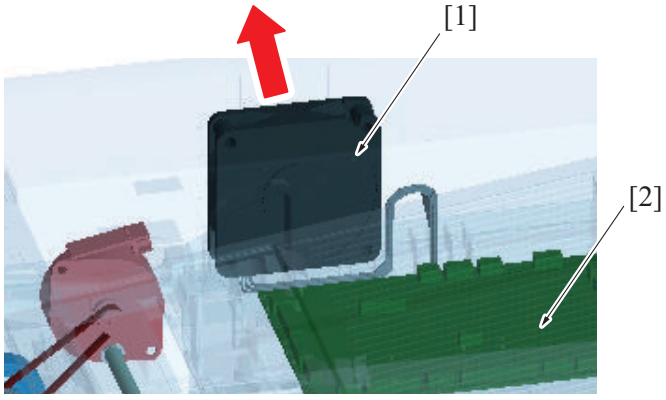

[1]	DF cooling fan motor (FM1)	[2]	DF control board (DFCB)

3.8 Document separation roller pressure switching mechanism

- As a solution to misfeed problems when they occur, the pressure of the document separation roller can be changed as necessary.
- Inserting a spacer into a space below the spring that applies pressure to the document separation roller, will increase the pressure.
- The pressure may be set in two steps selectable according to the direction in which the spacer is inserted.
- The spacer is disposed beside the document separation roller.

- For details, see “I.17.1.4 Adjusting the pressure of the separation roller”.

PC THEORY OF OPERATION PC-110/PC-210

1. CONFIGURATION

PC-110

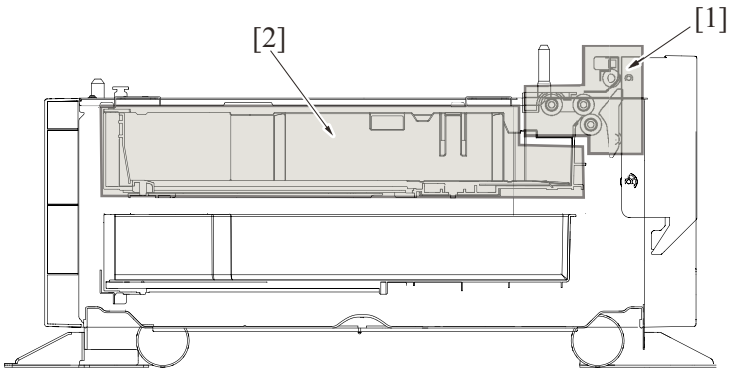

[1]	Tray 3 paper feed section	[2]	Tray 3 cassette section

PC-210

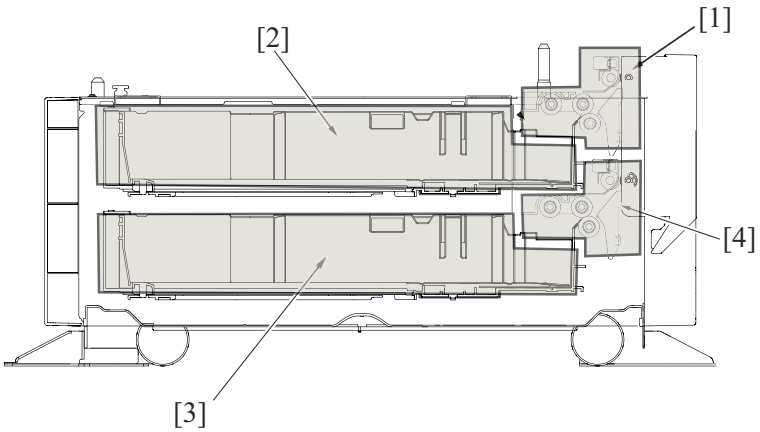

[1]	Tray 3 paper feed section	[2]	Tray 3 cassette section
[3]	Tray 4 cassette section	[4]	Tray 4 paper feed section

2. PAPER PATH

PC-110

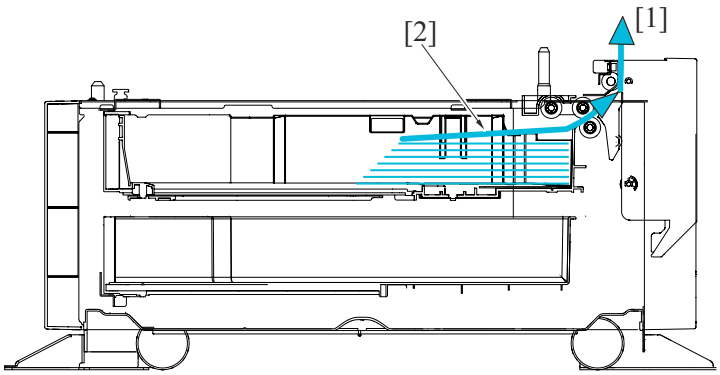

[1]	Transportation to main body	[2]	Paper feed from tray 3

PC-210

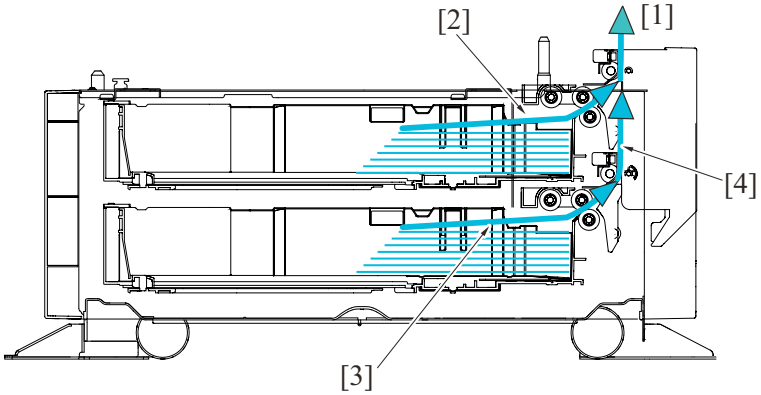

[1]	Transportation to main body	[2]	Paper feed from tray 3
[3]	Paper feed from tray 4	[4]	Vertical transportion

3. DRIVE

PC-110

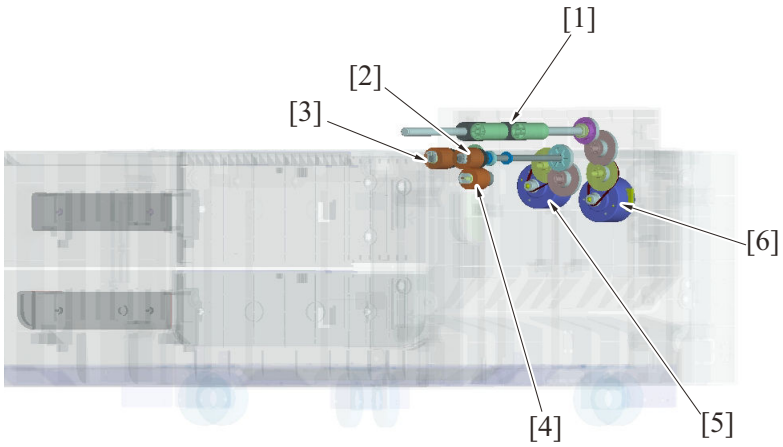

[1]	Tray 3 vertical transport roller	[2]	Tray 3 feed roller
[3]	Tray 3 pick-up roller	[4]	Tray 3 separation roller
[5]	Tray 3 paper feed motor (M111)	[6]	Tray 3 vertical transport motor (M112)

PC-210

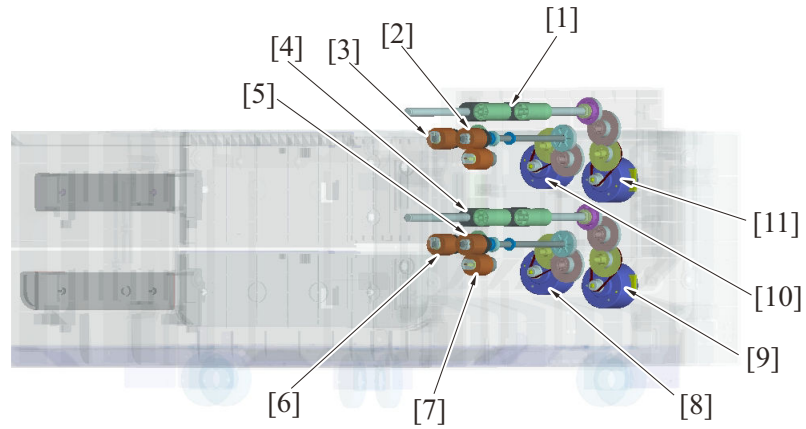

[1]	Tray 3 vertical transport roller	[2]	Tray 3 feed roller
[3]	Tray 3 pick-up roller	[4]	Tray 4 vertical transport roller
[5]	Tray 4 feed roller	[6]	Tray 4 pick-up roller
[7]	Tray 4 separation roller	[8]	Tray 4 paper feed motor (M121)
[9]	Tray 4 vertical transport motor (M122)	[10]	Tray 3 paper feed motor (M111)
[11]	Tray 3 vertical transport motor (M112)	-	-

4. OPERATION

4.1 Papar feed section

4.1.1 Paper feed drive mechanism

- Tray 3 has a paper feed drive mechanism having the same arrangement as that of tray 4. The paper feed drive mechanism is structured in the same manner as in tray 1 and tray 2 of the main body.
- Whereas operation is controlled using a clutch in tray 1 and tray 2, tray 3 and tray 4 incorporates a paper feed motor that drives the pick-up roller and feed roller to feed the paper.
- Then, the vertical transport motor transports the paper through the vertical transport section.
- The pick-up roller takes up sheets of paper, and the feed roller and separation roller ensure that only one sheet of paper is separated and fed into the main body.
- When the drawer is slid in, the lever is pushed to lower the pick-up roller.
- The tray is raised to cause the paper to push the feed roller. This raises the upper limit detection actuator, so that the upper limit is detected.
- The paper empty sensor detects when paper in the drawer runs out.

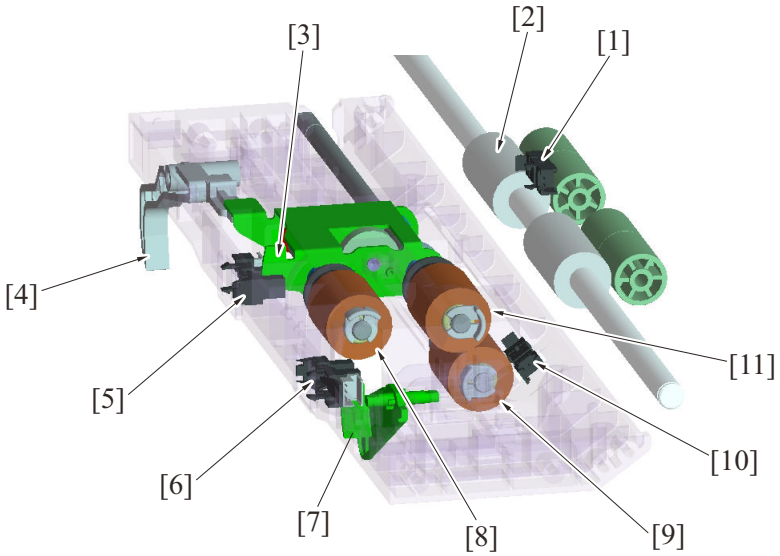

[1]	Tray 3/4 vertical transport sensor (PS113/PS123)	[2]	Vertical transport roller
[3]	Upper limit detection actuator	[4]	Lever
[5]	Tray 3/4 upper limit sensor (PS116/PS126)	[6]	Tray 3/4 paper empty sensor (PS114/PS124)
[7]	Empty detection actuator	[8]	Pick-up roller
[9]	Separation roller	[10]	Tray 3/4 paper feed sensor (PS112/PS122)
[11]	Feed roller	-	-

4.1.2 Paper lifting motion

- The FD paper size board of each tray detects whether the drawer is slid in or out.
- When the FD paper size board is activated, the lift-up motor is energized to thereby raise the paper lifting plate.
- The paper stack of the tray pushes up the pick-up roller.
- When the upper limit position is detected by the upper limit sensor, it stops raising the paper lifting plate.
- As paper is consumed during the print cycle and the pick-up roller is lowered, the lift-up motor is energized until the upper limit sensor is blocked again.

(1) When the drawer is slid in

1. The paper lifting plate goes up and the top surface of the paper stack pushes up the pick-up roller.
2. The lifting motion stops as soon as the upper limit sensor detects the upper limit position.

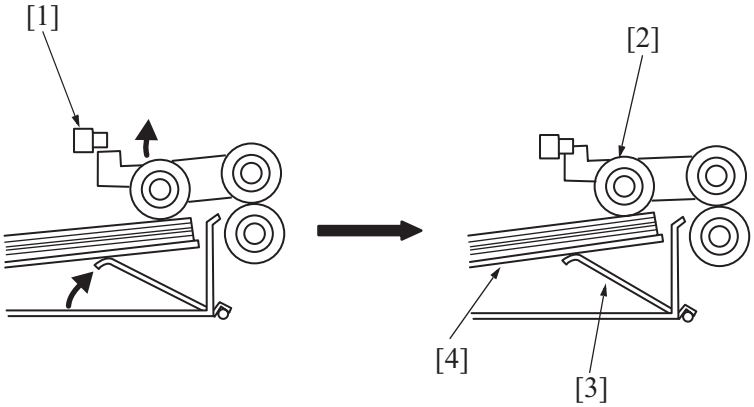

[1]	Tray 3/4 upper limit sensor (PS116/PS126)	[2]	Pick-up roller
[3]	Paper lifting plate B	[4]	Paper lifting plate A

(2) During a print cycle

1. As the paper is consumed, the upper limit sensor is unblocked. Then the paper lifting plate goes up.

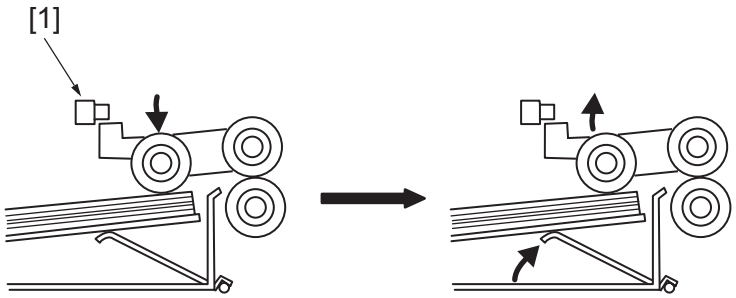

[1]	Tray 3/4 upper limit sensor (PS116/PS126)	-	-

4.2 Cassette section

4.2.1 Paper size detection

- When the paper length guide of the drawer is moved, the circular paper length detection plate located on the bottom of the drawer, turns, allowing four paper length detection sensors on the FD paper size board.
- Moving the paper width guide activates or deactivates two paper width detection sensors on the CD paper size board through the cutout in the lever.
- The combination of the four paper length detection sensors and two paper width detection sensors that are either activated or deactivated, determines the size of the paper loaded in the drawer.
- The FD paper length detection sensor detects that the drawer is slid into position as it is slid in.

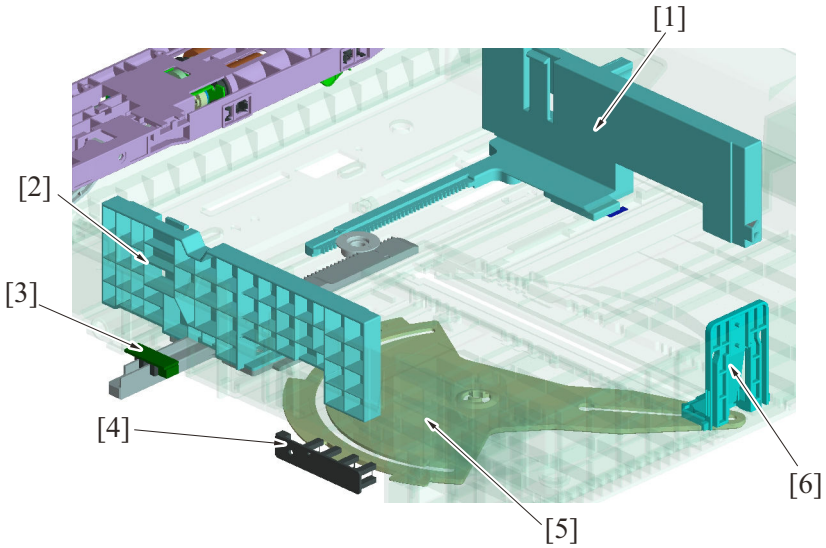

[1]	Paper width guide (front)	[2]	Paper width guide (rear)
[3]	Tray 3/4 CD paper size board (CDPSB/3, CDPSB/4)	[4]	Tray 3/4 FD paper size board (FDPSB/3, FDPSB/4)
[5]	Paper length detection plate	[6]	Paper length guide

4.2.2 Remaining paper display mechanism

- The amount of remaining paper is indicated by the LED on the right side of each tray and by the screen of the control panel.
- The estimate amount of paper for near empty is around 50 sheets.

Tray status	Empty	Near empty	Other status (During lifting-up and with tray not being set included)
LED status	ON	OFF/Blink *	OFF

- The near empty display may be OFF or Blink as set for within “Machine State LED Setting” of the service mode (the default setting is OFF).

Tray paper remaining amount display LED

PC-110 PC-210

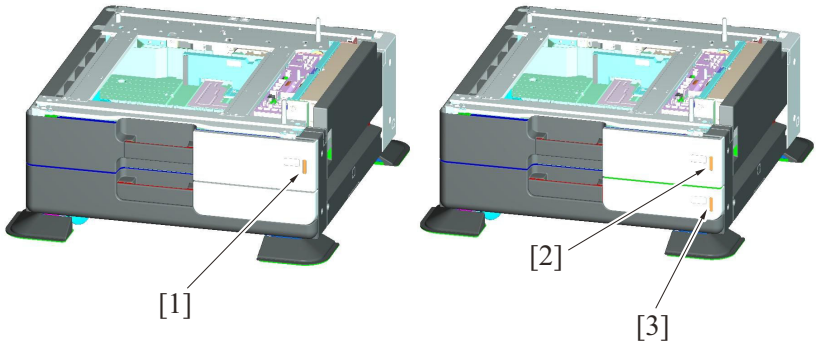

[1]	Tray 3 paper remaining amount display LED (PC-110)	[2]	Tray 3 paper remaining amount display LED (PC-210)
[3]	Tray 4 paper remaining amount display LED	-	-

Display on the control panel when paper empty is occurred

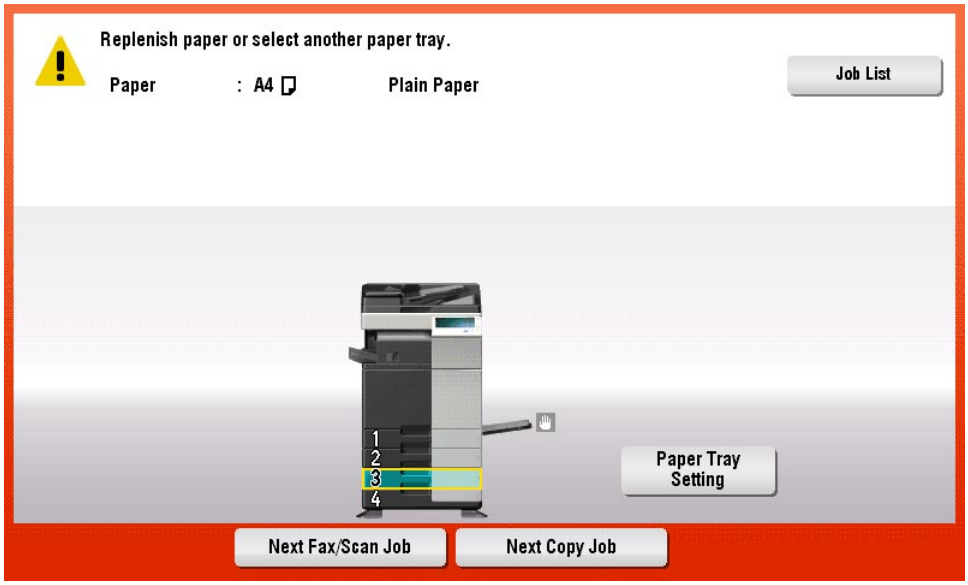

4.3 Dehumidifier heater control (HT-509)

- An optional dehumidifier heater may be added to the upper surface of the paper feed cabinet.
- When energized, the dehumidifier heater generates heat and prevents the paper stack loaded in the tray from becoming damp.
- The dehumidifier heater is turned ON when the engine is in a standby state or in the energy save mode, or when the engine is stationary with the cover open or a malfunction or a misfeed occurring, when the dehumidifier heater switch provided on the back of the cabinet, is turned ON.
- The dehumidifier heater is not turned ON if the dehumidifier heater switch is in the OFF position.

PC-110 PC-210

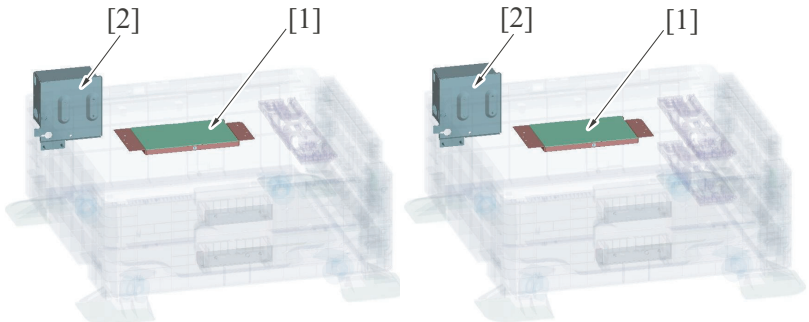

[1]	Dehumidifier heater (option: HT-509)	[2]	Power supply BOX (option: MK-734)

PD THEORY OF OPERATION PC-410

1. CONFIGURATION

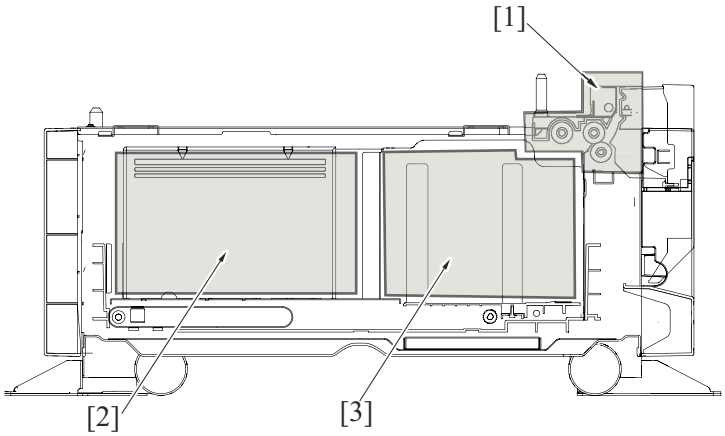

[1]	Paper feed section	[2]	Sub tray
[3]	Main tray	-	-

2. PAPER PATH

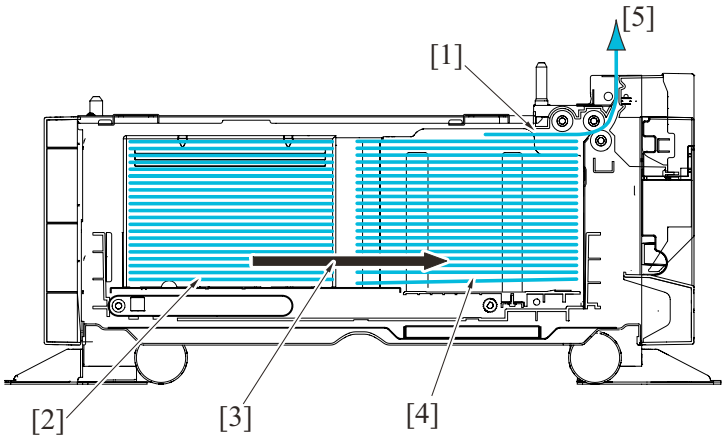

[1]	Paper feed from main tray	[2]	Sub tray
[3]	Move from the sub tray to the main tray	[4]	Main tray
[5]	Transportation to main body	-	-

3. DRIVE

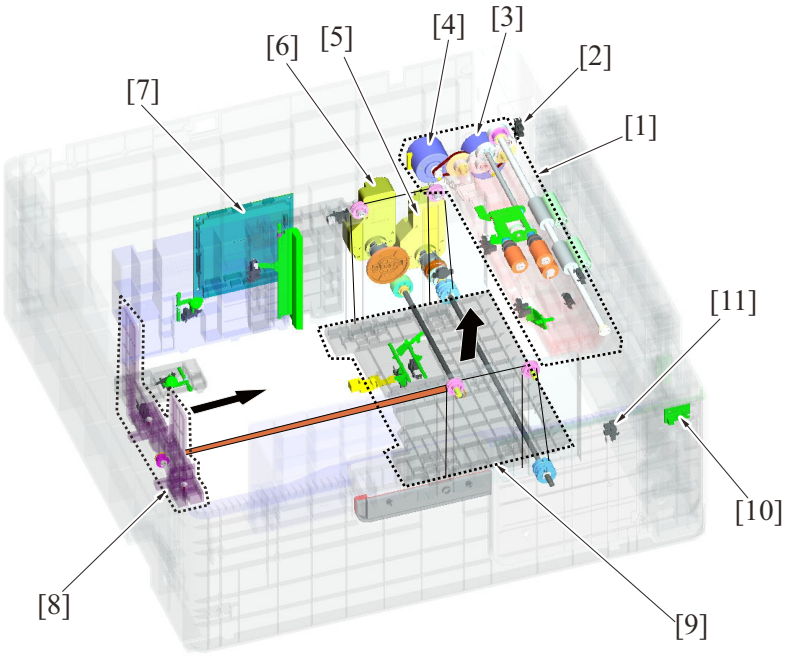

[1]	Paper feed section	[2]	Right bottom door sensor (PS131)
[3]	Vertical transport motor (M132)	[4]	Paper feed motor (M131)
[5]	Elevator motor (M134)	[6]	Shifter motor (M133)
[7]	PC control board (PCCB)	[8]	Shifter
[9]	Main tray	[10]	Tray 3 paper empty indicator board (PEIB/3)
[11]	Cassette set sensor (PS143)	-	-

4. OPERATION

4.1 Paper feed section

4.1.1 Paper feed drive mechanism

- The same paper feed drive mechanism as that found in PC-210/110 is incorporated.
- The paper feed motor drives the pick-up roller and feed roller to take up and feed a sheet of paper into the main body.
- Then, the vertical transport motor transports the paper through the vertical transport section.
- The pick-up roller takes up sheets of paper and the feed roller and separation roller ensure that only one sheet of paper is separated and fed into the main body.
- When the drawer is slid in, the lever is pushed to lower the pick-up roller.
- The tray is raised to cause the paper to push the feed roller. The tray is brought to a stop when the main tray upper limit sensor detects the upper limit.
- The main tray upper paper empty sensor detects whether paper is loaded on the main tray at the upper limit position.

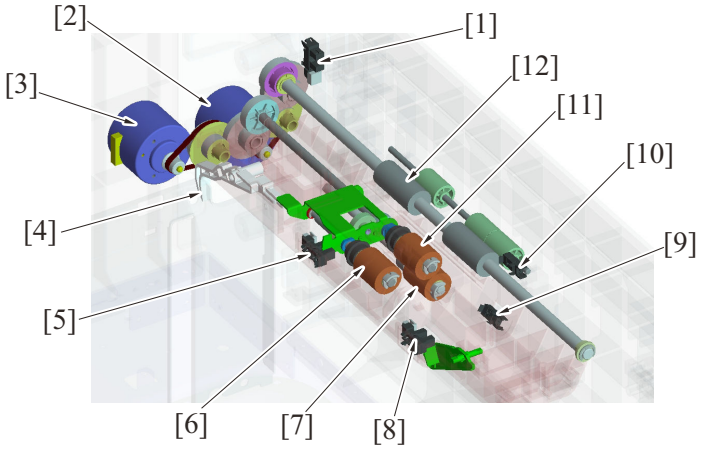

[1]	Right bottom door sensor (PS131)	[2]	Vertical transport motor (M132)
[3]	Paper feed motor (M131)	[4]	Lever
[5]	Main tray upper limit sensor (PS136)	[6]	Pick-up roller
[7]	Separation roller	[8]	Main tray upper paper empty sensor (PS137)
[9]	Paper feed sensor (PS132)	[10]	Vertical transport sensor (PS133)
[11]	Feed roller	[12]	Vertical transport roller

4.2 Main tray section

4.2.1 Main tray up / down mechanism

- The elevator tray is suspended by the cables at the front and rear.
- As the elevator motor turns forward or backward, the cables are wound to raise or lower the tray.
- The amount of paper left in the main tray is calculated using time for the lifting motion (period of time through which the elevator motor is kept energized).
- When the amount of paper becomes small, the near empty detection actuator blocks the main tray paper near empty sensor.
- When paper in the main tray runs out, the main tray paper empty sensor detects that condition and a descent motion of the main tray is started.
- The shifter stop/lower limit position sensor detects the main tray at its lower limit position.

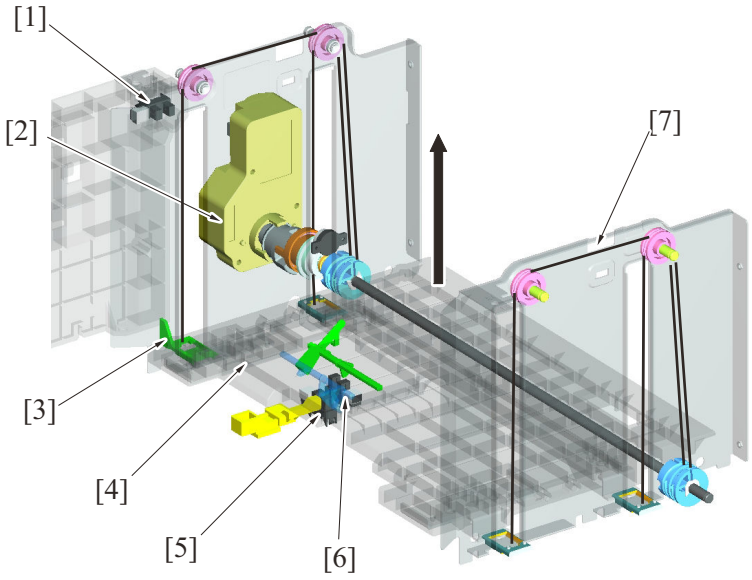

[1]	Main tray paper near empty sensor (PS135)	[2]	Elevator motor (M134)
[3]	Near empty detection actuator	[4]	main tray

[5]	Shifter stop/lower limit position sensor (PS138)	[6]	Main tray paper empty sensor (PS134)
[7]	Wire	-	-

4.2.2 Main tray lower limit detection

(1) Main tray lower limit detection

- If the sub tray is detected to be loaded with paper when paper on the main tray runs out, the descent motion of the main tray is started.
- The shifter stop/lower limit position sensor detects the lower limit position of the main tray.
- This sensor has two functions and detects also the stop position of the shifter.
- The shift stop position detection actuator portion detects the shifter stop position when it is pushed as a result of the lever being pushed by the shifter.

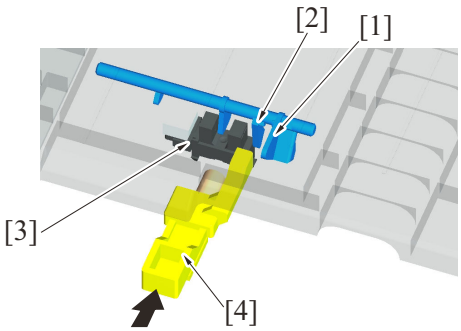

[1]	Lower limit detection actuator portion	[2]	Shifter stop position detection actuator portion
[3]	Shifter stop/lower limit position sensor (PS138)	[4]	Lever

(2) Main tray lower operation

- If the sub tray is detected to be not loaded with paper when paper on the main tray runs out, the descent motion of the main tray is not performed. The main tray is lowered when the drawer is slid out.
- When the drawer is slid out, the elevator motor is disengaged from the gear, so that the main tray lowers by its own weight.
- At this time, an effect of the damper connected to the gear prevents the main tray from lowering swiftly and ensures a slow descent motion.

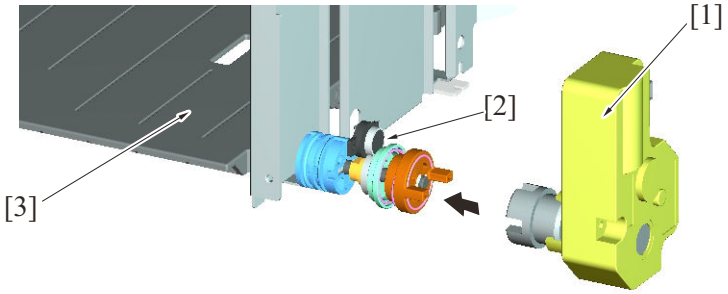

[1]	Elevator motor (M134)	[2]	Damper
[3]	Main tray	-	-

4.3 Sub tray section

4.3.1 Shifter drive mechanism

- If the main tray runs out of paper, while the sub tray is loaded with paper, the paper stack on the sub tray is moved to the main tray.
- The shifter motor drives the belt, which moves the shifter to thereby move the paper stack.
- The shifter moves to the position of the shifter stop/lower limit position sensor. Then, the shifter motor is rotated backward to return the shifter to, and stop it at, the position at which the shifter home sensor is blocked.

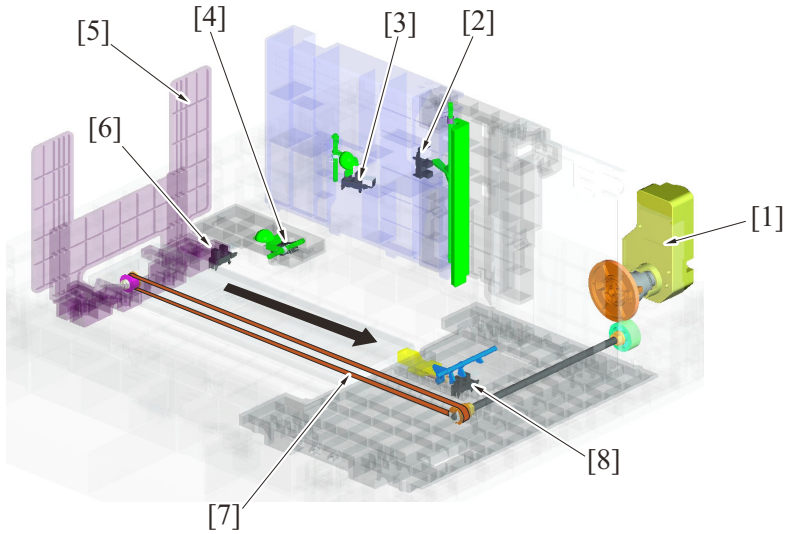

[1]	Shifter motor (M133)	[2]	Division board sensor (PS142)
[3]	Sub tray paper remaining amount sensor (PS141)	[4]	Sub tray paper empty sensor (PS140)
[5]	Shifter	[6]	Shifter home sensor (PS139)
[7]	Belt	[8]	Shifter stop/lower limit position sensor (PS138)

4.3.2 Sub tray paper remaining amount

- The amount of paper left on the sub tray, is detected by the combination of states of the sub tray paper remaining amount sensor and the sub tray paper empty sensor. The amount of paper left is detected at three different levels.
- Roughly speaking, the sub tray paper remaining amount sensor is deactivated from the activated state when the amount of paper left is about half the capacity of the tray.

Paper remaining amount	Sub tray paper remaining amount sensor	Sub tray paper empty sensor
Large	ON	ON
Small	OFF	ON
None	OFF	OFF

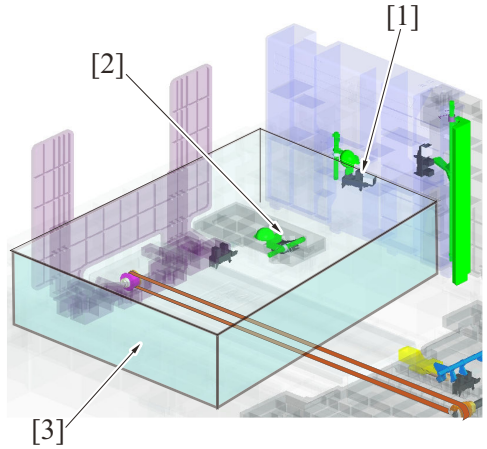

[1]	Sub tray paper remaining amount sensor (PS141)	[2]	Sub tray paper empty sensor (PS140)
[3]	Paper	-	-

4.4 Remaining paper amount displayed mechanism

- The amount of remaining paper is indicated by the LED on the right side of each tray and by the screen of the control panel.
- The estimate amount of paper for near empty is around 100 as 64 g/m^2 (17 lb) paper.

Tray status	Empty	Near empty	Other status (During lifting-up and with tray not being set included)
LED status	ON	OFF/Blink *	OFF

NOTICE
- The near empty display may be OFF or Blink as set for within “Machine State LED Setting” of the service mode (the default setting is OFF).
- The LED is OFF regardless of the amount of paper left in the tray in the energy save mode.

Tray paper remaining amount display LED

PC-410

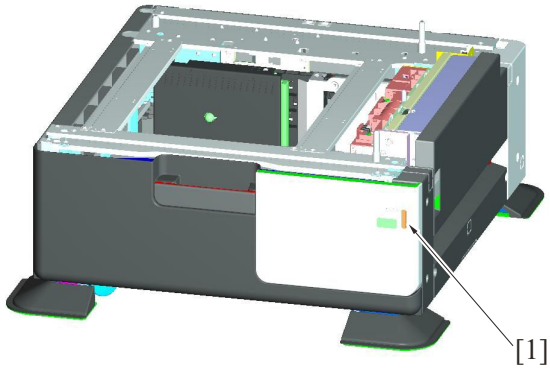

[1]	Tray paper remaining amount display LED	-	-

Display on the control panel when paper empty is occurred

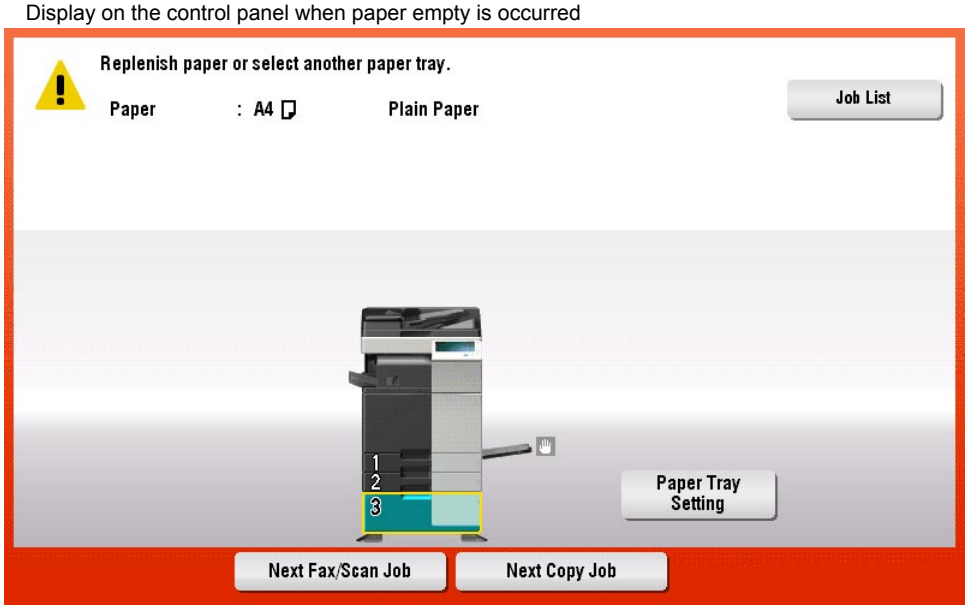

4.5 Dehumidifier heater control (HT-509)

- An optional dehumidifier heater may be added to the upper surface of the paper feed cabinet and desk DK-510.
- When energized, the dehumidifier heater generates heat and prevents the paper stack loaded in the tray from becoming damp.
- The dehumidifier heater is turned ON when the engine is in a standby state or in the energy save mode, or when the engine is stationary with the cover open or a malfunction or a misfeed occurring, with the dehumidifier heater switch provided on the back of the cabinet turned ON.
- The dehumidifier heater is not turned ON if the dehumidifier heater switch is in the OFF position.

PC-410 DK-510

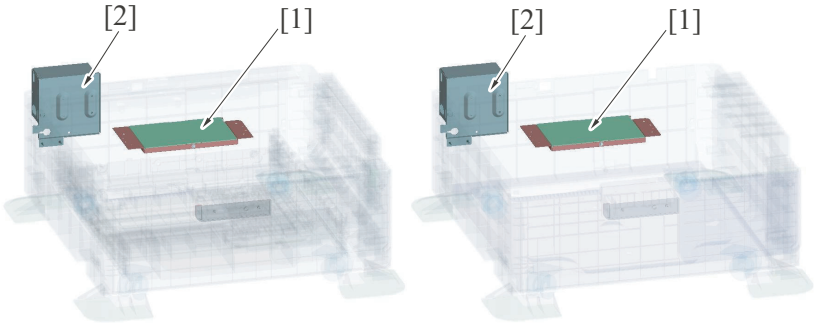

[1]	Dehumidifier heater (option: HT-509)	[2]	Power supply BOX (option: MK-734)

PE THEORY OF OPERATION JS-506

1. CONFIGURATION

1.1 Paper path

1.1.1 Paper feed to the exit tray

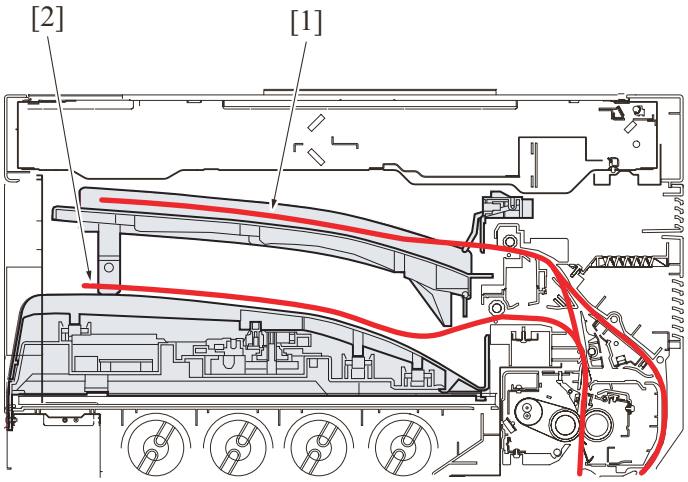

[1]	Paper feed to the exit tray 1	[2]	Paper feed to the exit tray 2

1.2 Section configuration

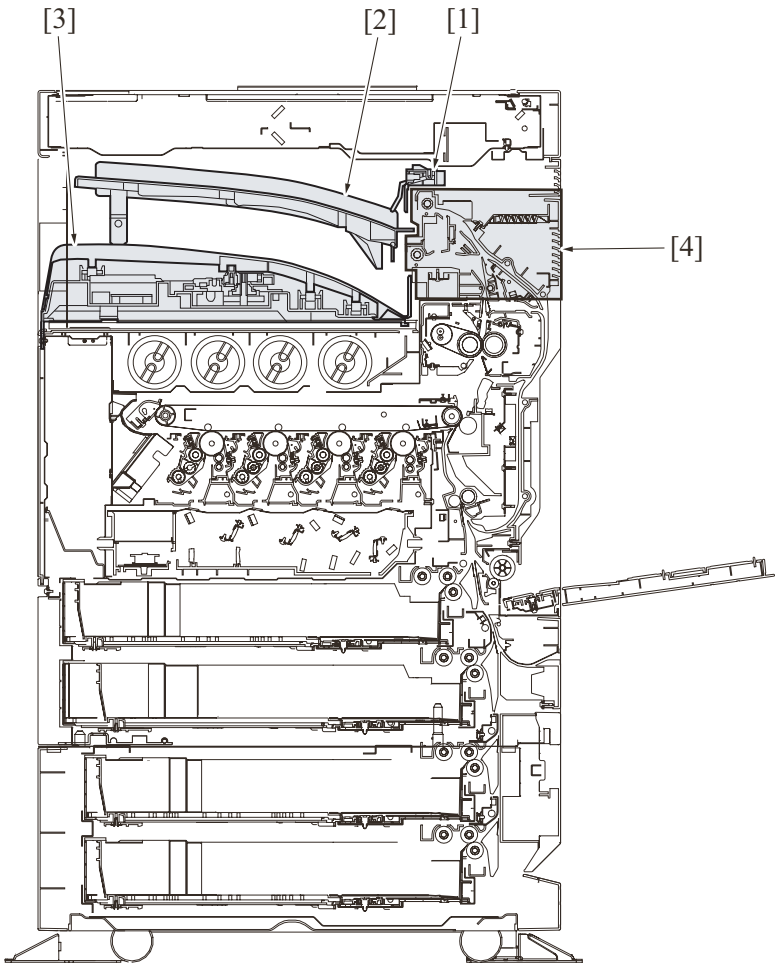

[1]	Exit tray 1 (sensor assy)	[2]	Exit tray 1 (exit tray)
[3]	Exit tray 2	[4]	Paper exit/reverse section at the main body

1.3 Configuration

- JS-506 has the exit tray 1 (upper) and the exit tray 2 (lower).

- JS-506 does not have the paper transport function and only has the shift function.

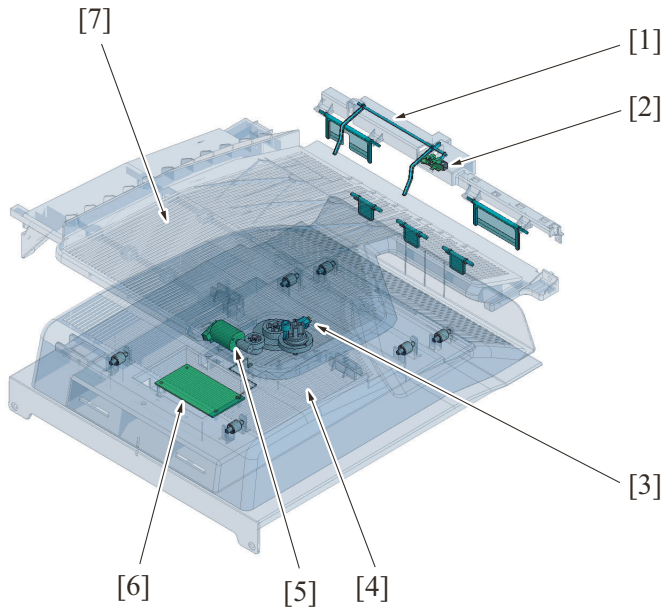

[1]	Exit tray 1 full detection lever	[2]	Exit tray 1 full sensor (PS2)
[3]	Tray shift home sensor (PS1)	[4]	Exit tray 2 (lower)
[5]	Tray shift motor (M1)	[6]	JS control board (JSCB)
[7]	Exit tray 1 (upper)	-	-

2. DRIVE

2.1 Transportation to exit tray 1

- The transportation to the exit tray 1 uses the reverse roller on the main body.

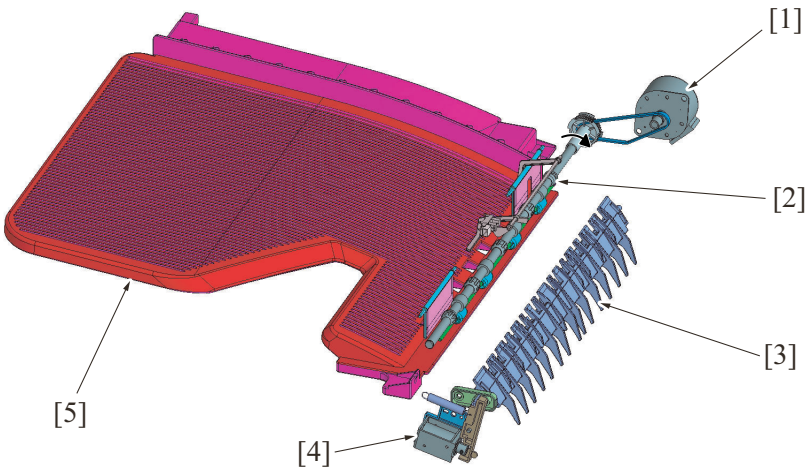

[1]	Reverse motor (main body: M4)	[2]	Reverse roller (main body)
[3]	Paper exit/reverse switch gate (main body)	[4]	Gate switch solenoid (main body: SD3: ON)
[5]	Exit tray 1	-	-

2.2 Transportation to exit tray 2

- The transportation to the exit tray 2 uses the paper exit roller on the main body.

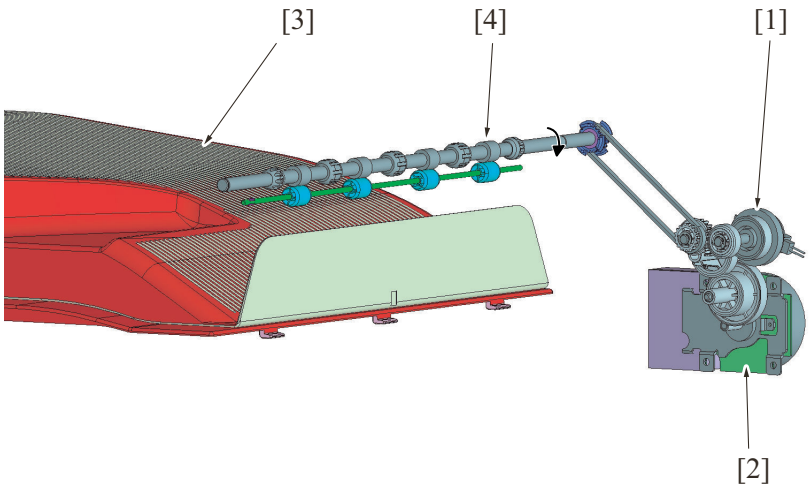

[1]	Paper exit clutch (main body: CL8)	[2]	Fusing motor (main body: M3)
[3]	Exit tray 2	[4]	Paper exit roller

2.3 Exit tray 2 shift mechanism

- The shift drive for the exit tray 2 uses the shift tray motor.

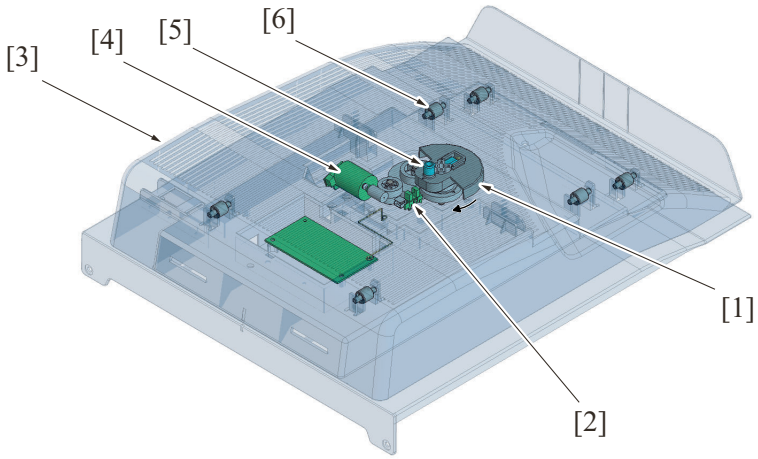

[1]	Shift control actuator	[2]	Tray shift home sensor (PS1)
[3]	Exit tray 2	[4]	Tray shift motor (M1)
[5]	Tray shift projection	[6]	Exit tray support rolls (6 points)

3. OPERATION

3.1 Exit tray 1

3.1.1 Paper transport

- Since the exit tray 1 does not have the paper transport function, the reverse rollers for the main body exit/reverse section are used to exit the paper to the tray.
- The paper exit/reverse switch gate is switched to the reverse side when transporting the paper to the reverse roller.
- The reverse roller stops after the predetermined period of time when the exit sensor on the main body detects the trailing edge of the last paper.

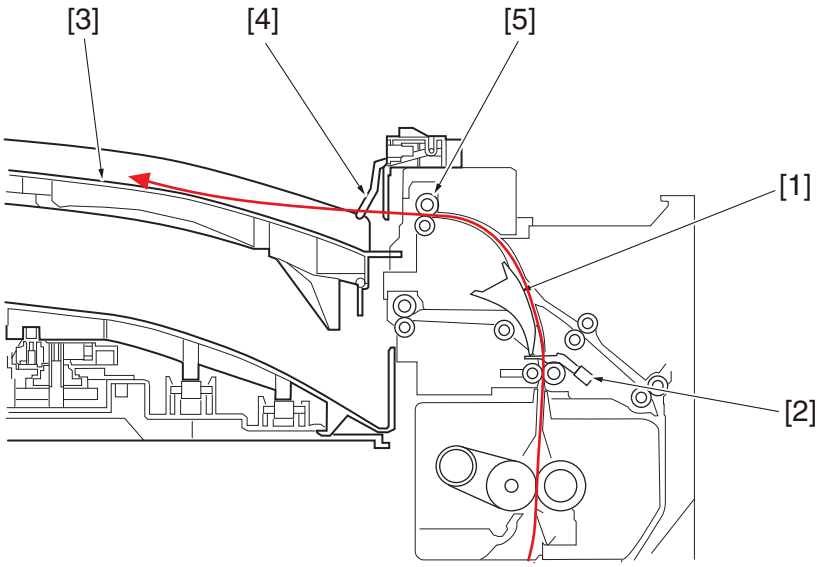

[1]	Paper exit/reverse switch gate (reverse side)	[2]	Paper exit sensor (main body: PS3)
[3]	Exit tray 1	[4]	Exit tray 1 full detection lever
[5]	Reverse roller (main body)	-	-

3.1.2 Paper full detection

- The exit tray 1 has the exit tray 1 full sensor which detects paper full.
  The sensor detects paper full with either 100 sheets of plain paper or stack height of 22.5 mm or less.
- Since the exit tray 2 does not have the paper full detect function, paper jam may occur when the paper exceeds the maximum number of sheets stacked.
  The maximum number of sheets stacked for the exit tray 2 is 150 sheets for plain paper.

NOTE

- **Number of sheets detected may differ depending on the equipment circumstances or the paper curled amount.**

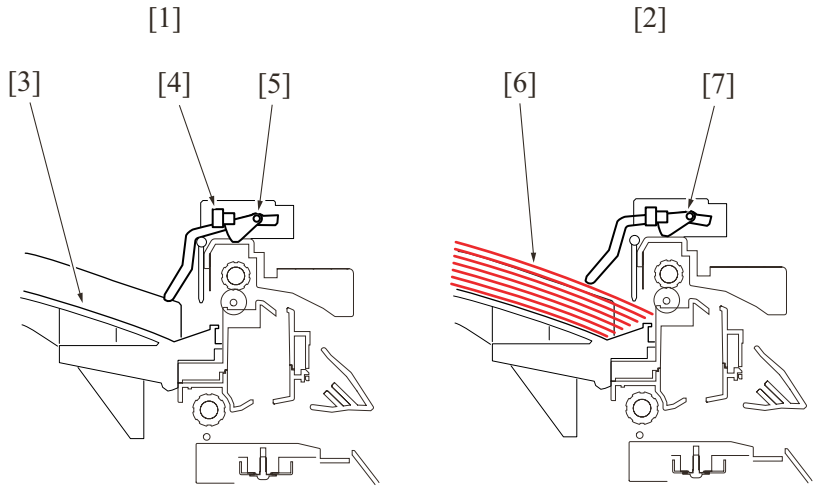

[1]	Exit tray 1: No exit paper	[2]	Exit tray 1: paper exit full detection
[3]	Exit tray 1	[4]	Exit tray1 full sensor (PS2)
[5]	Exit tray 1 full detection lever: unblocked	[6]	Exited paper
[7]	Exit tray 1 full detection lever: blocked	-	-

3.2 Exit tray 2

3.2.1 Paper transport

- Since the exit tray 2 does not have the paper transport function, the paper exit rollers for the main body exit/reverse section are used to exit the paper to the tray.
- The paper exit/reverse switch gate does not shift since it is in the default position.
- The paper exit roller stops after the predetermined period of time when the paper exit sensor on the main body detects the trailing edge of the last paper.

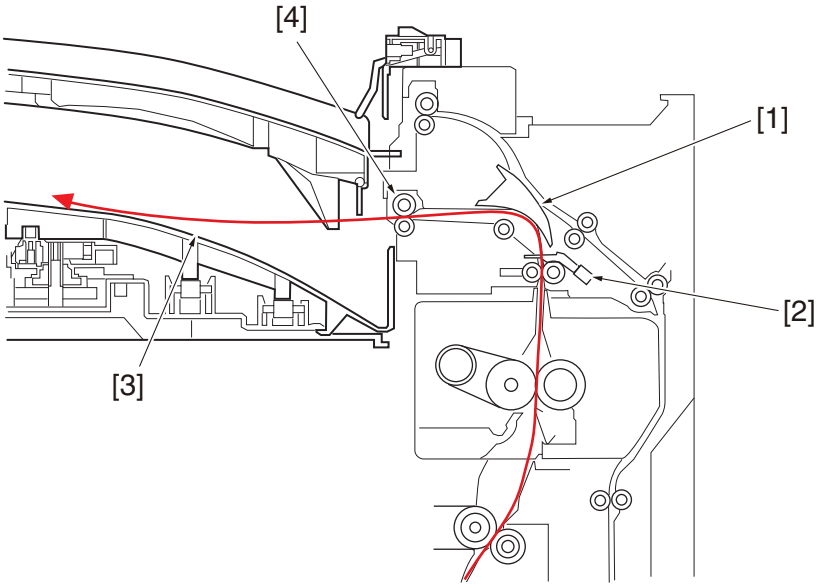

[1]	Paper exit/reverse switch gate (exit side)	[2]	Paper exit sensor (main body: PS3)
[3]	Exit tray 2	[4]	Exit roller

3.2.2 Paper shift mechanism

- Sorting is conducted by shifting the exit tray 2 back and forth.
- The shift mechanism operates when the "Shift output each job" is selected in default setting or when the offset function is selected on the control panel.
- The exit tray 2 shifts with the tray shift motor.
- The shift default setting for the exit tray 2 is detected by the tray shift home sensor.
- The exit tray 2 shifts to the front side when the power is on and the printing starts for the 1st job.
- When sort is selected, the exit tray 2 shifts as follows for each set: rear side -> front side -> rear side -> …

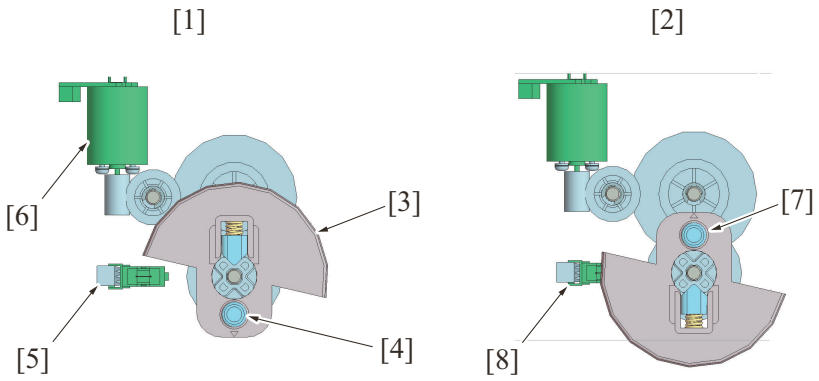

[1]	The exit tray 2 default position: front side	[2]	The exit tray 2 shift position: rear side
[3]	Shift control actuator	[4]	Tray shift projection: default position
[5]	Tray shift home sensor (PS1): unblocked	[6]	Tray shift motor (M1)
[7]	Tray shift projection: shift position	[8]	Tray shift home sensor (PS1): blocked

PF THEORY OF OPERATION FS-533/PK-519

1. FINISHER OUTLINE

- "Sort function, Sort offset function", "Group function, Group offset function", "Staple function" and "Sort staple function" can be added by installing the finisher FS-533 to the main body (bizhub C364e/C284e/C224e).
- The "Punch function" can be added by installing the optional function (Punch Kit PK-519).

Option	Summary of the additional functions
PK-519	Punch function

NOTICE
- D.1. SYSTEM CONFIGURATION
- C.7. FS-533
- C.8. PK-519

2. PAPER PATH

2.1 Sort offset mode/Group offset mode/Staple mode/Punch mode

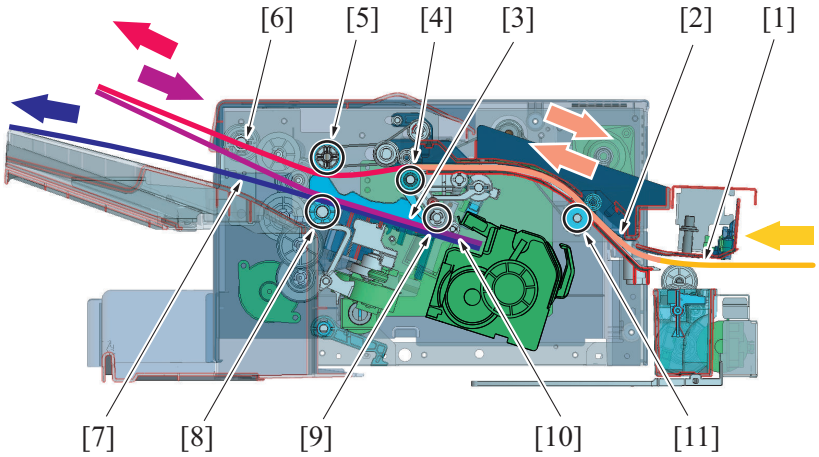

[1]	Paper transport/Paper punching (punch mode)	[2]	Paper transport/Skew correction (punch mode)
[3]	Paper alignment (Sort/Sort offset mode, Group/Group offset mode, Staple mode)	[4]	Receiving roller
[5]	Paper exit roller/upper	[6]	Paper transport
[7]	Paper batch exit (Sort/Sort offset mode, Group/Group offset mode, Staple mode)	[8]	Paper exit roller/lower
[9]	Alignment roller	[10]	Staple (staple mode)
[11]	Paper conveyance roller	-	-

2.2 Non sort mode/Non group mode/Non staple mode/Sort mode/Group mode/Punch mode

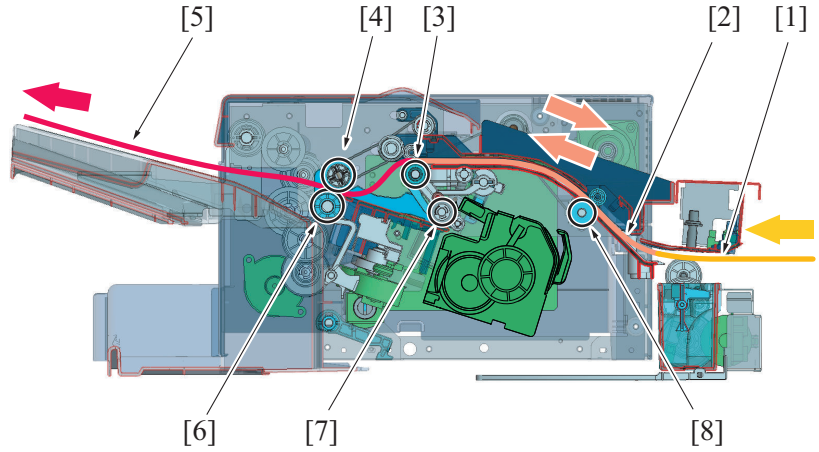

[1]	Paper transport/Paper punching (punch mode)	[2]	Paper transport/Skew correction (punch mode)
[3]	Receiving roller	[4]	Paper exit roller/upper
[5]	Paper exit	[6]	Paper exit roller/lower
[7]	Alignment roller	[8]	Paper conveyance roller

3. CONFIGURATION

3.1 Section configuration

- The finisher FS-533 has the finisher body installed on the paper exit section of the main body. Slide out the finisher from the main body of MFP for maintenance and other operations. The punch kit can be accessed by sliding out the main body of the finisher. (only when the optional punch kit kit is installed)
- The finisher has the sort/group mechanism and the staple mechanism as standard. The optional punch kit PK-519 can be installed between the right face of the finisher and the paper exit section of the main body.

Finisher FS-533



Punch kit PK-519

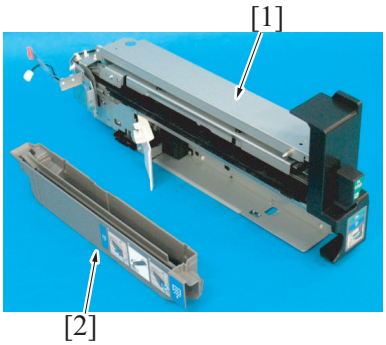

[1]	Punch unit	[2]	Punch dust box

FS-533 + PK-519 installed



FS 533 + PK-519 slid out

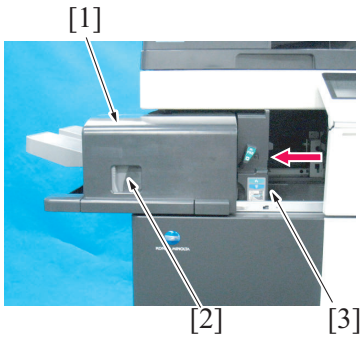

[1]	Finisher FS-533	[2]	Finisher release lever
[3]	Punch kit PK-519	-	-

FS 533 + PK-519 operation section

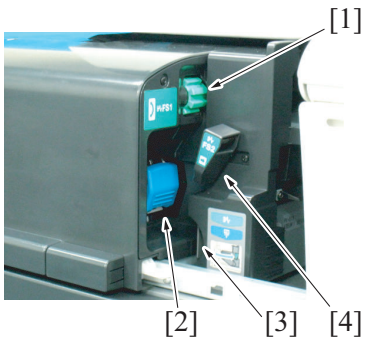

[1]	Jam removal dial	[2]	Staple cartridge
[3]	Punch dust box	[4]	Punch unit release lever

3.1.1 Section configuration

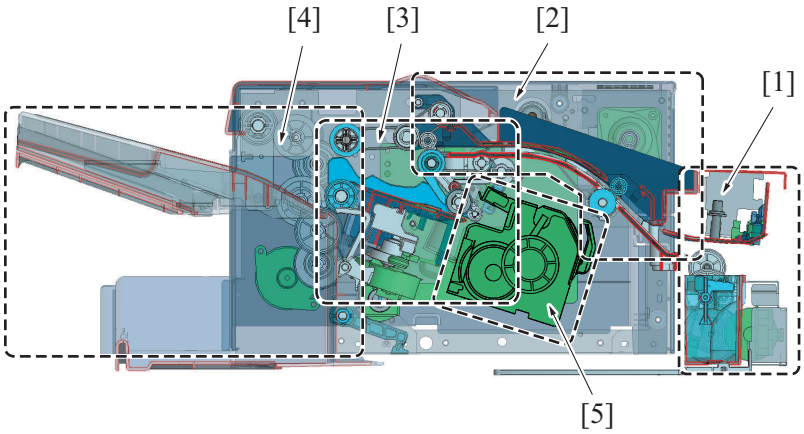

[1]	Punch section (only when punch kit PK-519 is installed)	[2]	Transport section
[3]	Alignment section	[4]	Receiving section
[5]	Staple section	-	-

3.2 Electrical part configuration

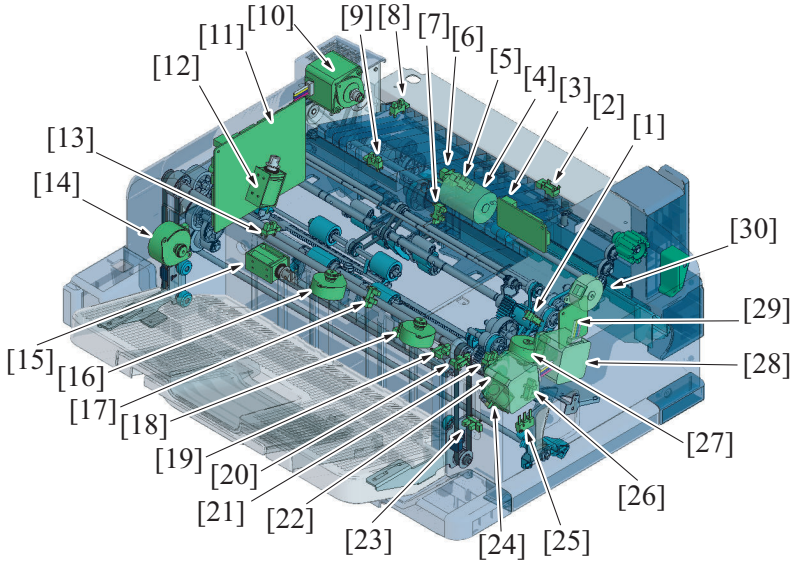

[1]	Pick up roller position sensor (PS105)	[2]	Paper feed sensor (PS201): Punch kit
[3]	PK control board (PKCB): Punch kit	[4]	Punch motor (M201): Punch kit
[5]	Punch dust full sensor (PS205): Punch kit	[6]	Punch motor sensor (PS202): Punch kit
[7]	Paper feed sensor (PS101)	[8]	Puncher home sensor (PS204): Punch kit
[9]	Puncher drive cam sensor (PS203): Punch kit	[10]	Paper conveyance motor (M101)
[11]	FS control board (FSCB)	[12]	Batch solenoid (SD102)
[13]	Alignment plate home sensor/R (PS109)	[14]	Tray lift up motor (M109)

[15]	Paper surface detect solenoid (SD101)	[16]	Alignment motor/R (M106)
[17]	Paper surface detect sensor/1 (PS102)	[18]	Alignment motor/F (M105)
[19]	Paper weight lever sensor (PS103)	[20]	Paper surface detect sensor/2 (PS104)
[21]	Alignment plate home sensor/F (PS108)	[22]	Exit roller lift up motor (M104)
[23]	Paper exit tray home sensor (PS107)	[24]	Paper exit roller solenoid (SD103)
[25]	Finisher lock switch (SW1)	[26]	Stapler home sensor (PS110)
[27]	Stapler movement motor (M107)	[28]	Paper exit motor (M102)
[29]	Stapler relay board (STREYB)	[30]	Alignment roller motor (M103)

3.3 Main mechanical part configuration

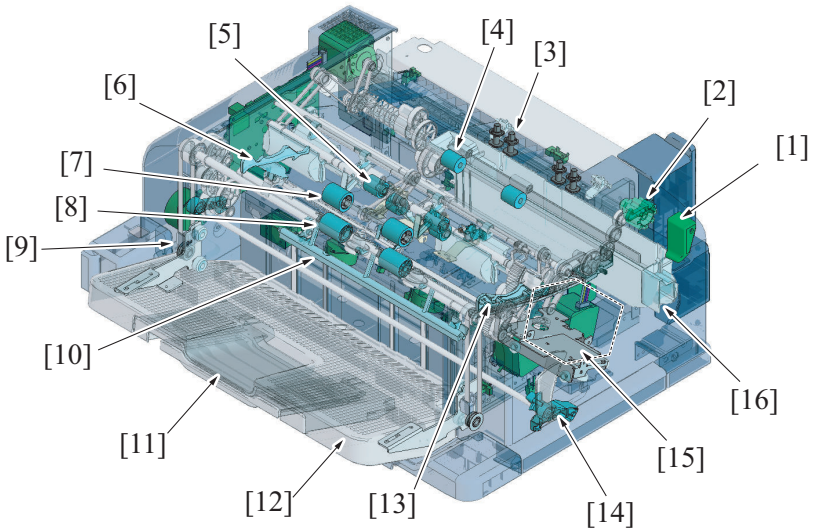

[1]	Punch kit release lever: Punch kit	[2]	Jam removal dial
[3]	Puncher *: Punch kit	[4]	Paper conveyance roller
[5]	Receiving roller	[6]	Alignment plate/Rr
[7]	Exit roller/upper	[8]	Exit roller/lower
[9]	Tray lifter	[10]	Paper surface detect lever
[11]	Sub tray	[12]	Paper exit tray
[13]	Alignment plate/Fr	[14]	Finisher release lever
[15]	Stapler	[16]	Punch dust box

- *: The number of punchers differs depending on the type of the punch kit. For details, see “PF.5.1.1 Punch kit type”.

3.4 Main roller configuration

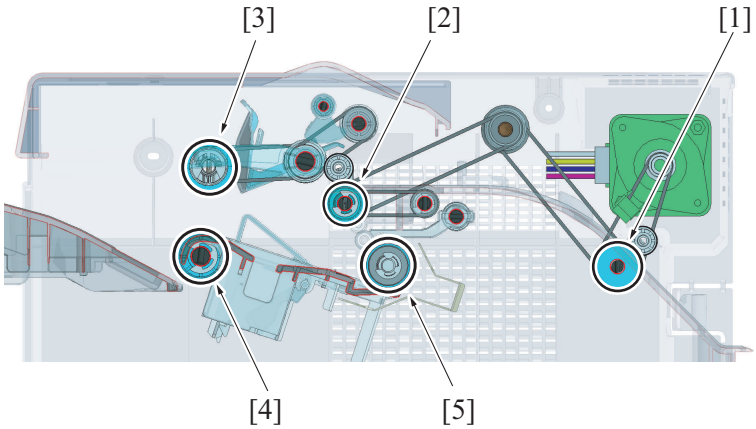

[1]	Paper conveyance roller	[2]	Receiving roller
[3]	Exit roller/upper	[4]	Exit roller/lower
[5]	Alignment roller	-	-

4. UNIT OPEN/CLOSE SECTION

4.1 Unit open/close mechanism

- The finisher (FS-533) and punch kit (PK-519) are provided in the each unit lock mechanism.

Overall view

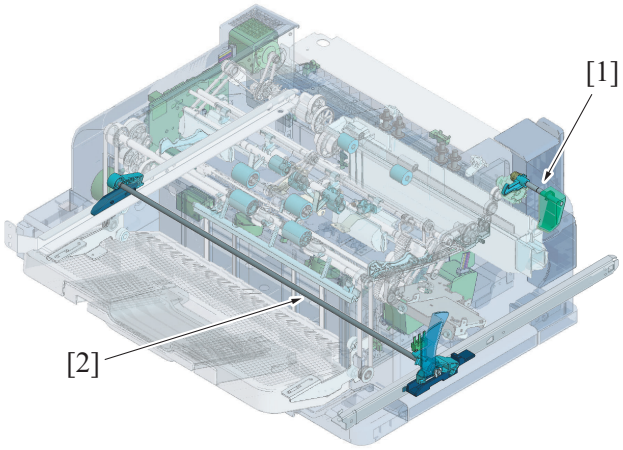

[1]	Punch unit lock mechanism	[2]	Finisher unit lock mechanism

4.1.1 Finisher unit lock mechanism

- Releasing the finisher release lever at the front side of the finisher releases the locking claws at the front and rear sides of the finisher from the finisher slide rail. The finisher and the main body will be disconnected to enable the finisher to slide leftward.
- When the finisher is slid, the finisher lock switch turns off to detect that the finisher is opened.
- When the finisher is detected to be opened, the warning message will be displayed on the screen to inform that the unit is open. Following jobs will then be prohibited.
- Closing the finisher releases the warning screen to releases the job prohibition.

Front view

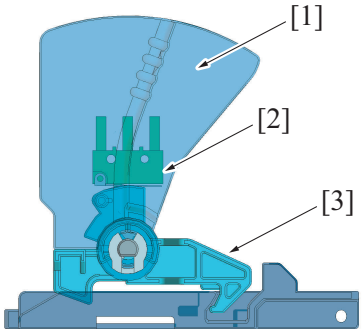

[1]	Finisher release lever	[2]	Finisher lock switch (SW1)
[3]	Lock claw	-	-

Warning screen

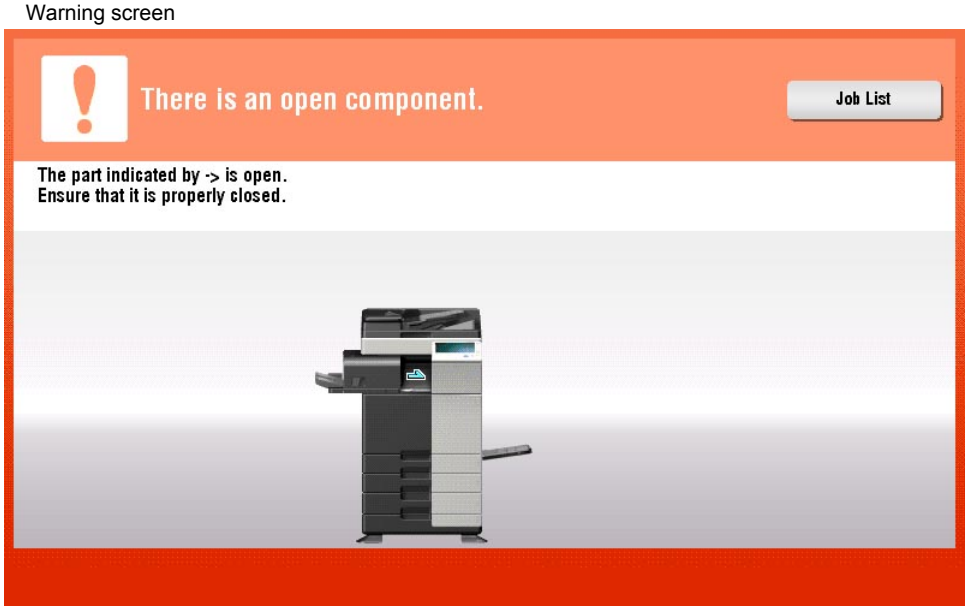

4.1.2 Punch unit lock mechanism (PK-519)

- When the finisher is opened, the release lever for the punch unit will be exposed. (only when the optional punch kit PK-519 is installed)
- The punch unit does not have a switch to detect open/close of the unit.

NOTE

- **The function to detect open/close of the punch unit is not installed since the finisher needs to be opened to open the punch unit.**

Front view

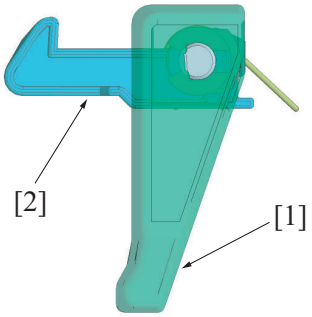

[1]	Punch kit release lever	[2]	Lock claw

5. PUNCH SECTION (PK-519)

5.1 Configuration

- The punch function can be added to the finishing mode by installing the optional punch kit PK-519 to the finisher FS-533.
- At the punch section, the holes are punched at the paper transported from the main body paper exit section when the paper is fed into the finisher.
- When punching the holes on the paper, the paper transported to the transport section will be switchbacked to the punching section to correct the paper skew before punching the holes. Punching is conducted paper by paper. The punched paper will be transported from the punch section to the transport section.
- When the number of punch holes is not commanded at "finish", the paper will be transported to inside the finisher without switchback of the paper and punching.
- 2 hole/3 hole punch kits as well as 2 hole/4 hole punch kits have mechanisms to switch the number of punch holes.
  NOTE
  - **2 holes punch kit and 4 holes punch kit do not have the function to switch the number of punch holes.**
  - **"Finishing" cannot be selected using a different punch kit. (Example: Three holes punch mode cannot be selected when the 4 holes punch kit is installed.)**

- Punch dust generated by punching is received in the punch dust box.

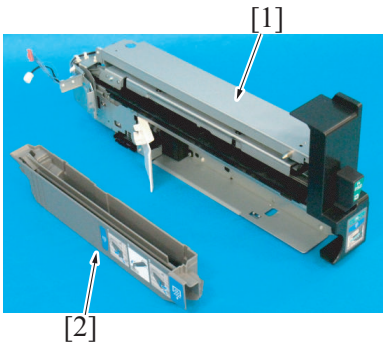

[1]	Punch unit	[2]	Punch dust box

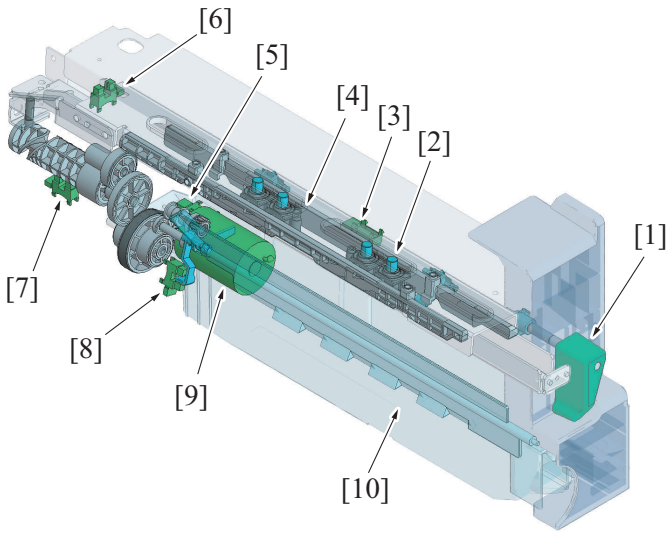

[1]	Punch unit release lever	[2]	Puncher *1
[3]	Paper feed sensor (PS201)	[4]	Puncher frame *2
[5]	Punch motor sensor (PS202)	[6]	Puncher home sensor (PS204)
[7]	Puncher drive cam sensor (PS203)	[8]	Punch dust full sensor (PS205)
[9]	Punch motor (M201)	[10]	Punch dust box

- *1: The number of the puncher is varied depending on the type of punch kit.
- *2: The shape of the puncher frame is varied depending on the type of punch kit.

5.1.1 Punch kit type

2 holes/3 holes kit (Selectable the hole number)

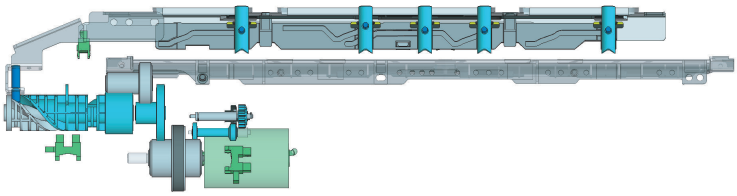

- Attachable marketing area: Europe, US, Others 1-5

2 holes/4 holes kit (Selectable the hole number)

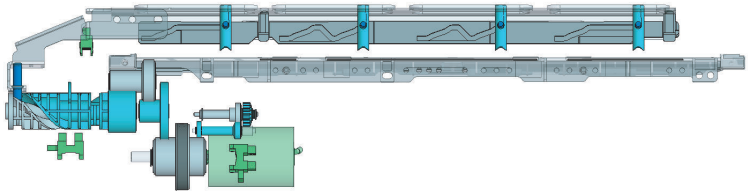

- Attachable marketing area: Europe, US, Others 1-5

2 holes punch kit

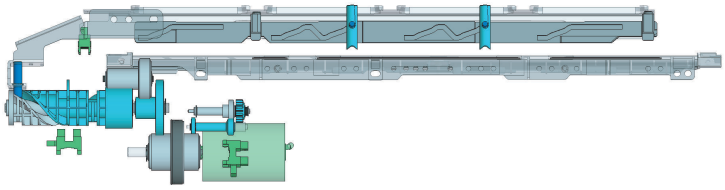

- Attachable marketing area: Japan

4 holes punch kit

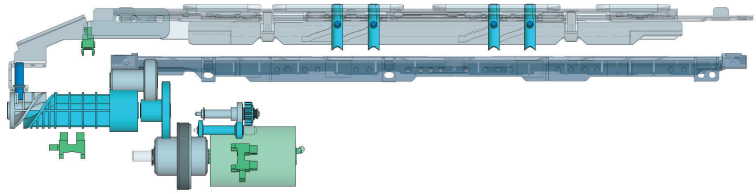

- Attachable marketing area: Europe

5.2 Drive

- The drive source for the punch section is a punch motor. It drives the puncher and the punch dust agitating blade.
- The puncher is driven via the puncher drive cam.
- The punch dust agitating blade is driven via the agitating blade drive connecting lever. The agitating blade drive connecting lever has the function to detect punch dust full.

Overall view

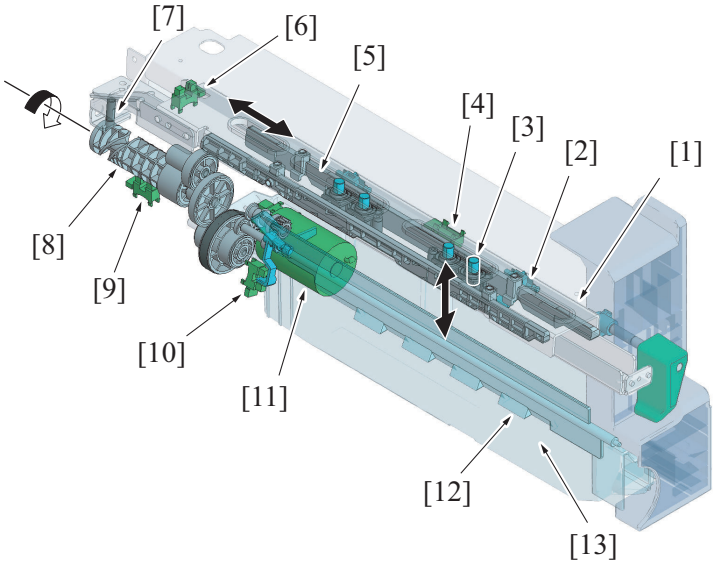

[1]	Puncher frame *1	[2]	Registration guide
[3]	Puncher *2	[4]	Paper feed sensor (PS201)
[5]	Slide came	[6]	Puncher home sensor (PS204)
[7]	Cam slide shaft	[8]	Puncher drive cam
[9]	Puncher drive cam sensor (PS203)	[10]	Punch dust full sensor (PS205)
[11]	Punch motor (M201)	[12]	Punch dust agitating blade
[13]	Punch dust box	-	-

- *1: The shape of the puncher frame is varied depending on the type of punch kit.
- *2: The number of the puncher is varied depending on the type of punch kit.

NOTE

- **The illustration explains with an example for "2 holes/4 holes kit".**
- **The slide cam has a guide. The shape of the guide and the different shift value of the puncher frame enable only the specified puncher to move down.**
- **The "2 holes kit" and the "4 holes kit" do not have the punch hole switching function.**

Enlarged view of the punch dust agitating blade drive section

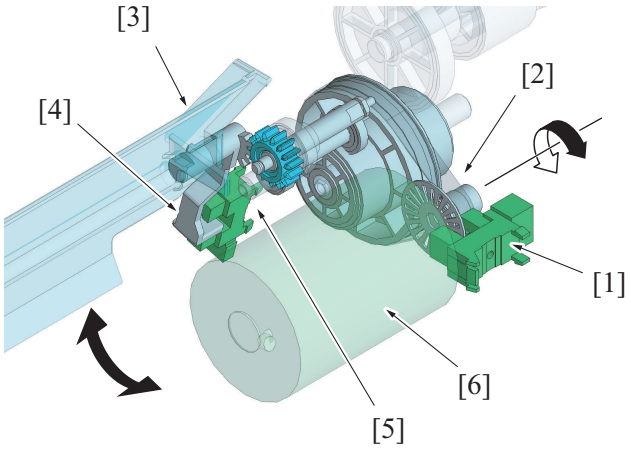

[1]	Punch motor sensor (PS202)	[2]	Encoder
[3]	Punch dust agitating blade	[4]	Punch dust agitating blade drive connecting lever
[5]	Punch dust full sensor (PS205)	[6]	Punch motor (M201)

5.3 Operation

5.3.1 Skew correction mechanism

- When in punch mode, the paper is transported to the paper transportation section of the finisher once and switchbacked to make the paper contact the registration guide. This process will correct the skew at the rear edge of the paper (tilt) to enable punching at the proper position.

Overall view

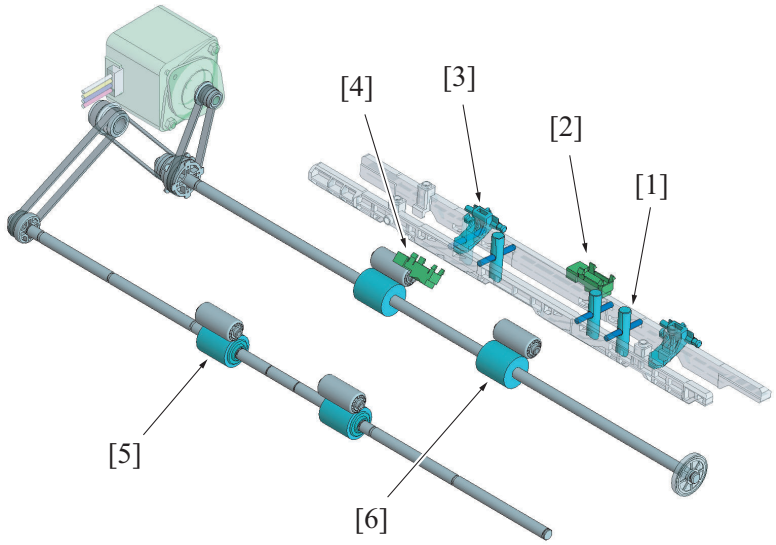

[1]	Puncher	[2]	Paper feed sensor (PS201)
[3]	Registration guide	[4]	Paper feed sensor (PS101)
[5]	Receiving roller	[6]	Paper conveyance roller

Front view

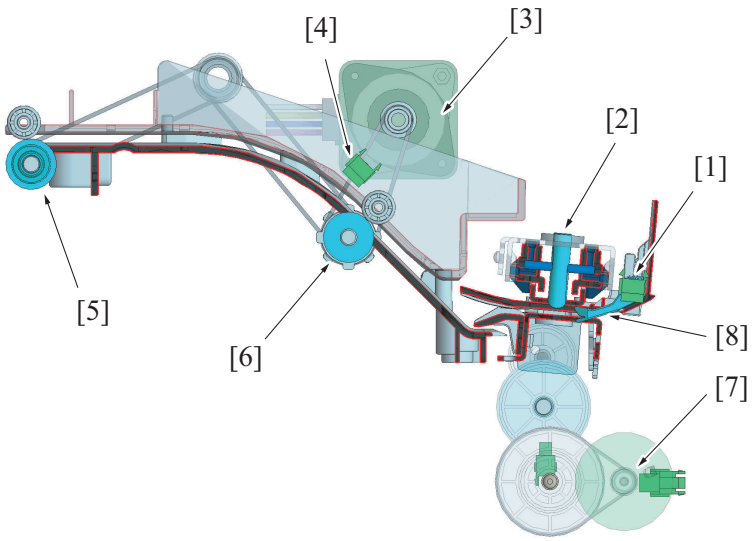

[1]	Paper feed sensor (PS201)	[2]	Puncher
[3]	Paper conveyance motor (M101)	[4]	Paper feed sensor (PS101)
[5]	Receiving roller	[6]	Paper conveyance roller
[7]	Punch motor (M201)	[8]	Registration guide

(1) Skew correction process

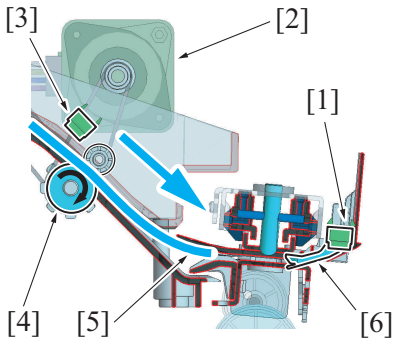

1. The paper conveyance motor [2] of the finisher will rotate forward, and the transportation roller [4] will rotate forward. The paper will be transported for the punching section to the transportation section.
2. The paper feed sensor [3] (PS101) will detect the front edge of the paper, and the paper feed sensor [1] (PS201) will detect the rear edge of the paper.
3. When the paper feed sensor [1] (PS201) detects the rear edge of the paper and the specified period of time has passed, the transportation motor will rotate in reverse direction.
4. The paper will be switchbacked [5] once, and the rear edge of the paper contacts the registration guide [6].

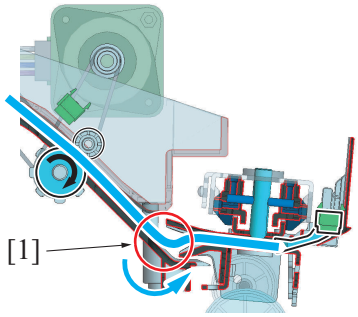

5. When the paper is switchbacked, the paper forms a loop [1] between the transport roller and the registration guide, and corrects the paper skew (tilt).
6. The paper feed sensor at the punching section detects the rear edge of the paper, and the paper conveyance motor stops after the specified period of time to stop the switchback of the paper.

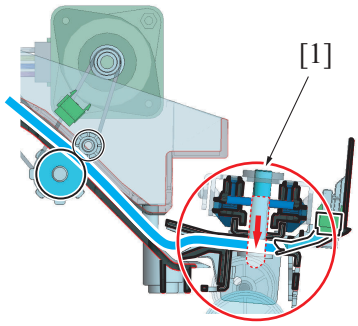

7. The switchback of the paper stops, and the puncher [1] moves down to punch the hole on the paper.
8. After punching the hole, the conveyor motor rotates forward to transport the paper into the finisher.

5.3.2 Punch control

- The holes are punched on the paper by switchback of the paper into the punch unit and by moving the puncher up/down by the punch motor.

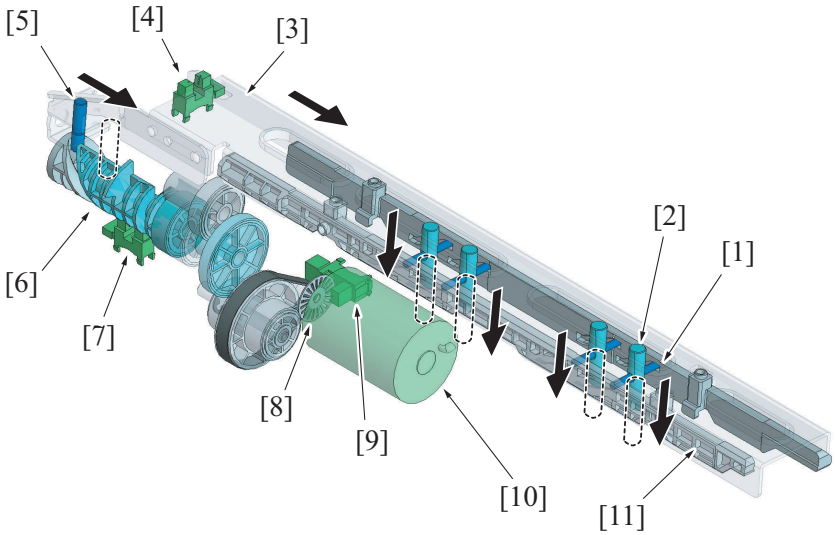

[1]	Puncher slide pin	[2]	Puncher
[3]	Puncher frame	[4]	Puncher home sensor (PS204)
[5]	Puncher frame slide pin	[6]	Puncher drive cam
[7]	Puncher drive cam sensor (PS203)	[8]	Encoder
[9]	Punch motor sensor (PS202)	[10]	Punch motor (M201)
[11]	Slide cam	-	-

(1) Paper punching process

1. The puncher frame waits at the home position to make the puncher waits at the upper position.
   Position of the puncher frame is detected by the puncher home sensor.
2. Paper feed sensor at the punch section detects the rear edge of the paper, and stops switchback of the paper after a specified period of time.
3. The punch motor rotates forward to rotate the puncher drive cam forward. The punch frame then will move towards the front side. When the puncher frame moves towards the front side, the slide cam moves the puncher down by its cam shape.
   The rotation value of the punch motor is detected by the number of times light shielding plate blocks the punch encoder sensor. The value the slide cam moves back and forth differs depending on the value the punch motor rotates. When the value the slide cam moves changes, the value of the puncher moves in vertical direction also changes. The position of the puncher is judged in process. The rotating position of the puncher driven cam is detected by the puncher drive cam sensor.

Example: Figure for 2 holes punching operation for 2 hoes/3 holes kit

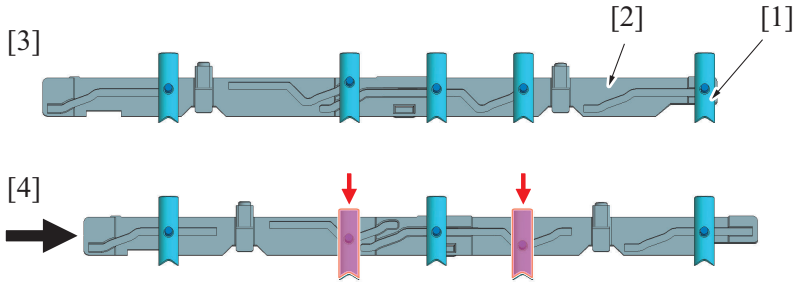

[1]	Puncher	[2]	Slide cam
[3]	Puncher frame (home position)	[4]	Puncher frame (Punching position)

- The left side of the cross section shows the far side of the punch unit. The right side shows the front side.

4. When the puncher frame moves to the front side, the slide cam pushes the puncher down to punch the holes at the rear edge of the paper. (The holes are punched paper by paper.)
   The holes are judged to be punched according to the rotation value of the punch motor.
   NOTE
   - **The number of the punchers (number of the holes) differs depending on the type of the punch kit.**
   - **The number of the punch holes is switched according to the shift value of the puncher frame for the 2 holes/3 holes kit as well as 2 holes/4 holes kit.**
     For details, see "PF.5.3.3 Punch holes switch control".
5. When the holes are punched, the punch motor rotates in reverse direction, and the puncher drive cam rotates in reverse direction. This process leads the puncher frame to return to the home position to move the puncher up.

5.3.3 Punch holes switch control

- 2 holes/3 holes punch kit as well as 2 holes/4 holes punch kit have mechanisms to switch the number of punch holes.

(1) Number of punch holes switch mechanism

- The slide cam has a guide. With the shape of the guide and the shift value of the puncher frame, only the specified puncher can be moved down.

- The shift value of the puncher frame is judged by the rotation value of the punch motor. The rotation value of the punch motor is detected by the punch motor sensor.
- The number of the punch holes can be selected when selecting the punch mode.

NOTE

- **When the second type of punch hole (3 holes on the illustration) is selected, the puncher frame shifts to the waiting position 2 from the waiting position 1 (home position) and waits prior to the job.**

- The number of the puncher and the guide shape of the slide cam differ depending on the type of the punch kit.

Example: cross section of the 2 holes/3 holes kit

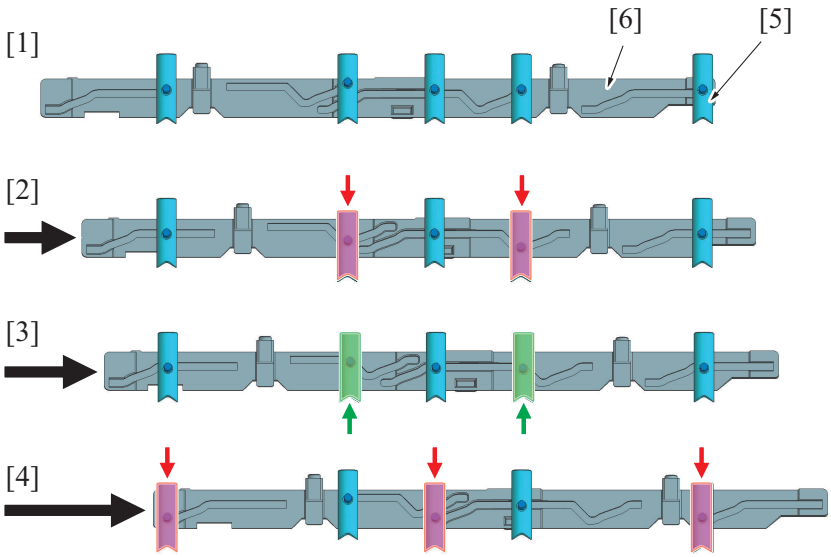

[1]	Waiting position 1 (home position)	[2]	Puncher frame shift value: Small (Example: 2 holes punching position)
[3]	Waiting position 2 (puncher frame shift value: medium)	[4]	Puncher frame shift value: Large (Example: 3 holes punching position)
[5]	Puncher	[6]	Slide cam

(2) Puncher frame position detect mechanism

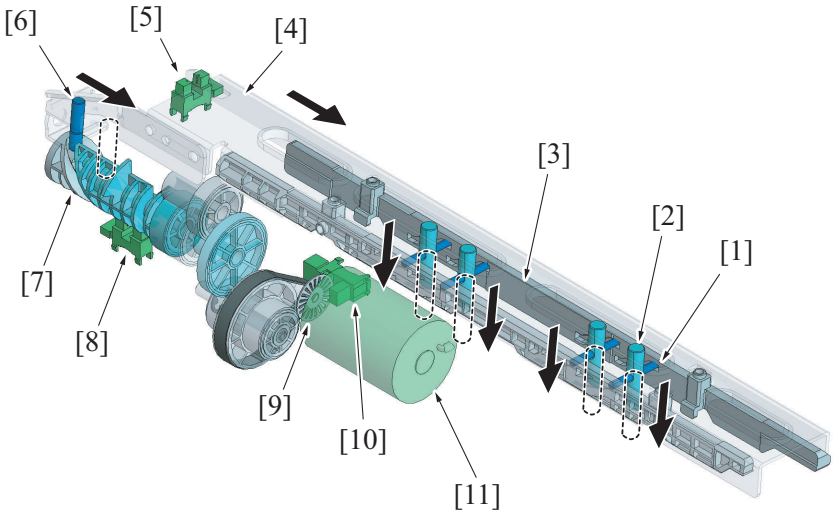

[1]	Puncher slide pin	[2]	Puncher
[3]	Slide cam	[4]	Puncher frame
[5]	Puncher home sensor (PS204)	[6]	Puncher frame slide pin
[7]	Puncher drive cam	[8]	Puncher drive cam sensor (PS203)
[9]	Encoder	[10]	Punch motor sensor (PS202)
[11]	Punch motor (M201)	-	-

(a) Puncher position detect control

- The waiting position 1 (home position) and the waiting position 2 are judged by the assembly of the detecting result of the punch home sensor and the puncher drive cam sensor.

Puncher retract position	Puncher home sensor	Puncher drive cam sensor
Waiting position 1 (puncher retract position)	Blocked	1st light block

Puncher retract position	Puncher home sensor	Puncher drive cam sensor
Punching position 1 (Example: 2 holes punching)	Unblocked	1st light unblock
Waiting position 2 (puncher retract position)		2nd light block
Punching position 2 (Example: 3 holes punching)		2nd light unblock

(b) Puncher shift value detect mechanism

- The shift value of the puncher frame is judged by the number of times the encoder blocks the punch motor sensor.

5.3.4 Punch dust full detection control

- The punch dust box section has the punch dust full sensor. When the job is commanded with the punch dust exceeding the specified value, a warning message for the punch dust full is displayed on the operation panel.
- The punch dust full sensor detects the volume of the punch dust with the position of the agitating blade drive connecting lever.
- The punch dust full sensor also detects if the punch dust box is installed.
  If the punch dust box is not installed when the punch job is commanded, the warning message for the punch dust full will be displayed on the operation panel.
- Even when the "punch dust full" is detected, printing is not prohibited. All the jobs except punching holes will be conducted until finished.

Punch dust box over view

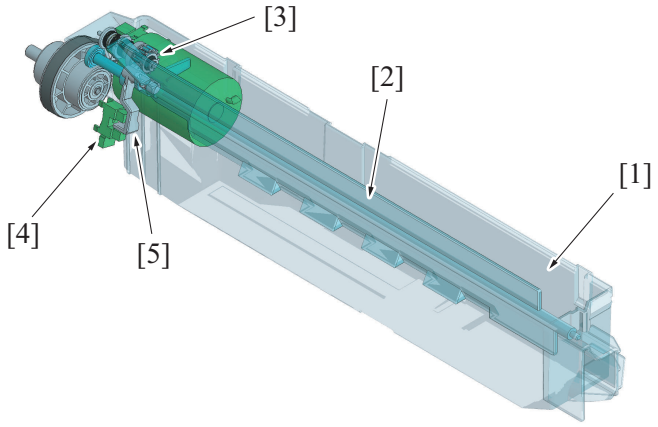

[1]	Punch dust box	[2]	Punch dust agitating blade
[3]	Drive transmission gear	[4]	Punch dust full sensor (PS205)
[5]	Agitating blade drive connecting lever	-	-

Enlarged view of the punch dust full sensor section

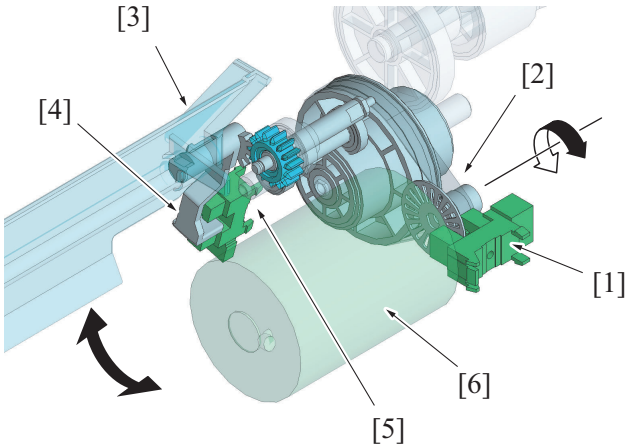

[1]	Punch motor sensor (PS202)	[2]	Encoder
[3]	Punch dust agitating blade	[4]	Agitating blade drive connecting lever
[5]	Punch dust full sensor (PS205)	[6]	Punch motor (M201)

(1) Punch dust full detect operation

Punch dust agitating blade home position view

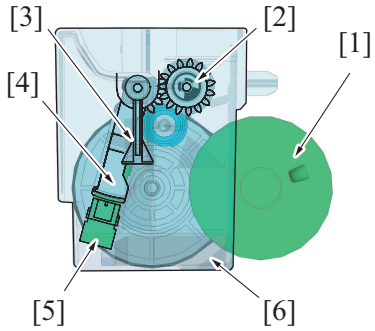

1. The drive transmission gear [2] stops while the punch motor [1] is in halt.
   The punch dust agitating blade [3] in the punch dust box [6] waits at the home position.
   The agitating blade drive connecting lever [4] blocks the punch dust full sensor [5] during that time.

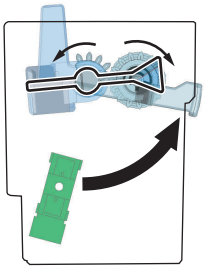

2. When the punch motor rotates forward, the drive transmission gear rotates forward.
3. When the drive transmission gear rotates forward, the agitating blade drive connecting lever rotates forward to rotate the punch dust agitating blade forward.
   When the agitating blade drive connecting lever rotates, the punch dust full sensor is unblocked.
   The punch dust agitating blade rotates to level the punch dust in the punch dust box.

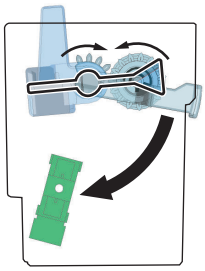

4. When punching holes is complete, the punch motor starts rotating in reverse direction.
   When the punch motor rotates in reverse direction, the punch dust agitating blade rotates in reverse direction and tries to return to the home position.

In normal operation

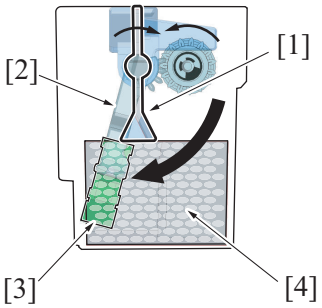

NOTE
In normal operation:
- **The agitating blade drive lever [2] and the punch dust agitating blade [1] return to their home positions by the punch motor's drive force.**
- **By the agitating blade drive connecting lever [2] returning to the home position, the punch dust full sensor [3] will block the light. The punch dust [4] then is judged not to be full.**

When the punch dust is full

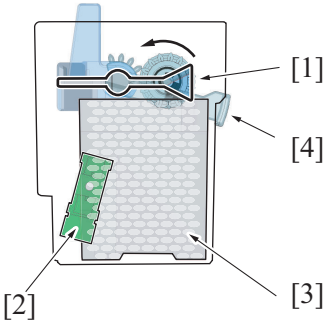

NOTE
When the punch dust is full:
- **The agitating blade drive lever [4] and the punch dust agitating blade [1] cannot return to their home positions due to the punch dust [3].**
- **The torque limiter function is installed to the drive transmission gear to prohibit transmission of the drive force more than specified.**
- **With the agitating blade drive connecting lever [4] not returning to the home position, the punch dust full sensor [2] keeps being unblocked. When the transmission status is detected for 10 consecutive times during punching operation, the punch dust [3] is detected to be full to display the message warning that the punch dust is at full level.**

Punch dust full message: typical



Punch dust full message: typical

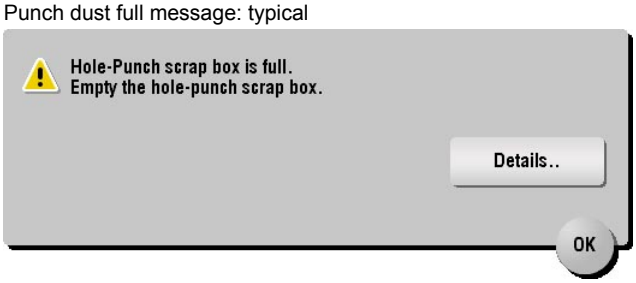

(2) Punch dust box not installed detect control

1. When the punch dust box is installed, the agitating blade drive connecting lever waits at the home position. (blocks the punch dust full sensor)
2. When the punch dust box is removed, the punch dust full sensor is unblocked.
3. When the finisher is closed and the punch job is commanded with the above status, the punch dust box is detected to be uninstalled to display the message warning that the punch dust box is full.

NOTE

- **Even when the "punch dust box not installed" is detected, printing is not prohibited. All other jobs except punching holes will be conducted and continued until finished.**
- **Punching the holes to the paper will be conducted only when the punch dust box is installed.**

(3) Unit change function

- The screen to be displayed when a punch dust full is detected can be enabled or disabled in the “Unit Change” in the Service Mode.

Service Mode/System Input screen: typical

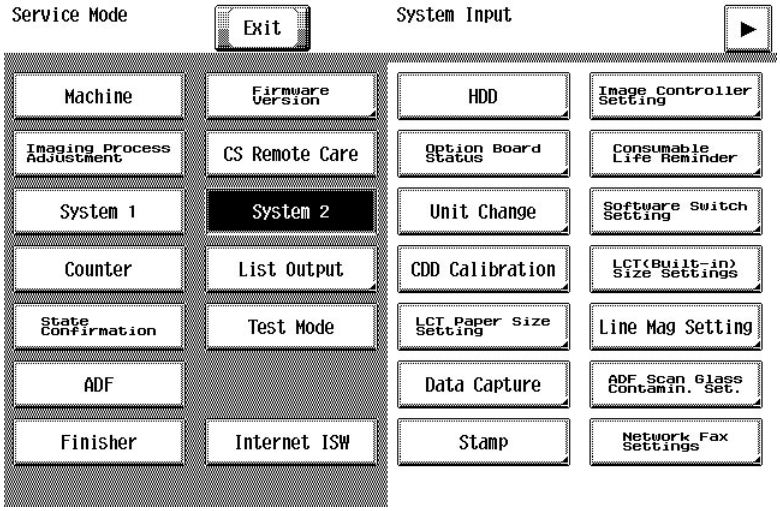

System 2/Unit Change screen: typical

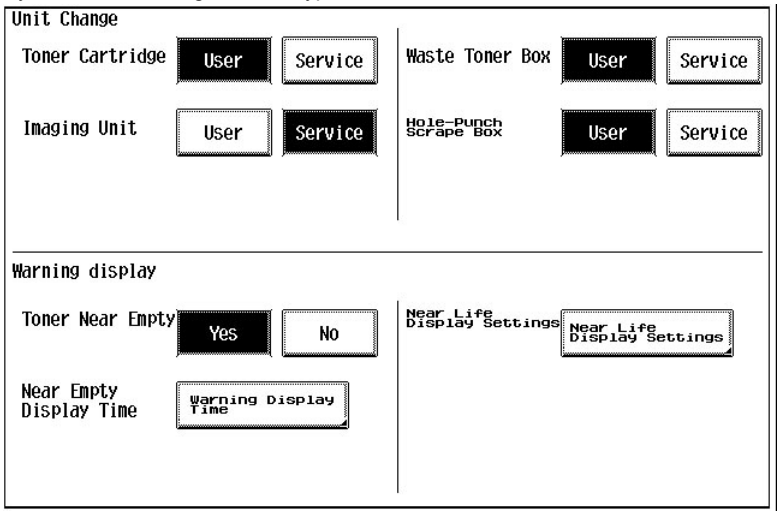

NOTE

- **For details of the Service Mode, see “I.11.15.5 Unit Change”**

6. TRANSPORT SECTION

6.1 Configuration

- The transportation section will transport the paper from the paper exit section of the MFP main body (punching section when the punch kit is installed) to inside the finisher as well as to the alignment section.

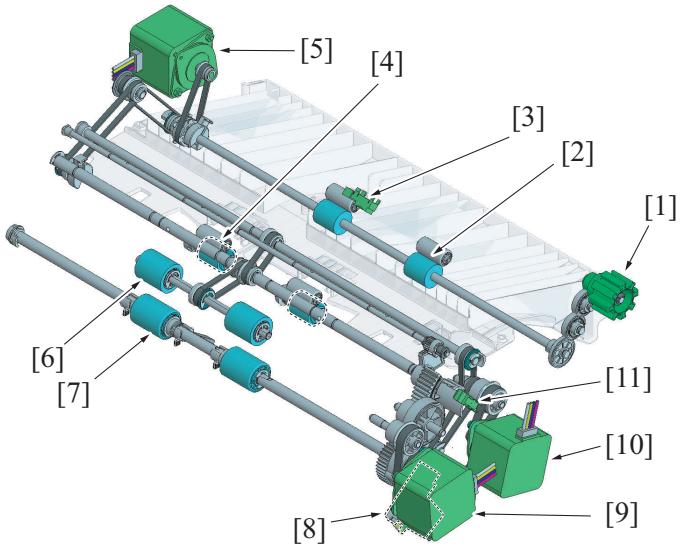

[1]	Jam removal dial	[2]	Paper conveyance roller
[3]	Paper feed sensor (PS101)	[4]	Receiving roller
[5]	Paper conveyance motor (M101)	[6]	Exit roller/upper
[7]	Exit roller/lower	[8]	Paper exit roller solenoid (SD103)
[9]	Exit roller lift up motor (M104)	[10]	Paper exit motor (M102)
[11]	Pick up roller position sensor (PS105)	-	-

6.2 Drive

6.2.1 Drive outline

The driving source of the transport section is the paper conveyance motor, paper exit motor, and exit roller lift up motor, and the following parts are driven.

Section	Driving source	Driving parts	Function
Transport/ receiving roller section	Paper conveyance motor	• Transport roller • Receiving roller	• Transports the paper to inside the finisher • Transports the paper to the alignment section • Switchbacks the paper to the punching section (when in punch mode)
Exit roller section	Paper exit motor	• Exit roller/upper • Exit roller/lower • Paper exit paddle	• Rotates the exit roller/upper in reverse direction to transport the paper to the alignment tray (when in sort/group mode) • Rotates the exit roller/upper and the exit roller/lower in forward direction to exit the paper to the paper exit tray.
	Exit roller lift up motor	• Exit roller/upper • Paper guide	Moves the exit roller/upper and the paper guide up/down • Moves the exit roller/upper down to transport the paper to the alignment tray (when in sort/group mode) • Moves the exit roller/upper down to exit the paper to the paper exit tray

6.2.2 Paper conveyance/receiving roller section drive

- The drive source for the paper conveyance and the receiving roller section is the paper conveyance motor which drives paper conveyance roller and the receiving roller.
- The paper conveyance roller and the receiving roller can be manually rotated (forward/reverse) by manually rotating the process dial for the paper clog. This dial is to be used when the paper is clogged inside the finisher.

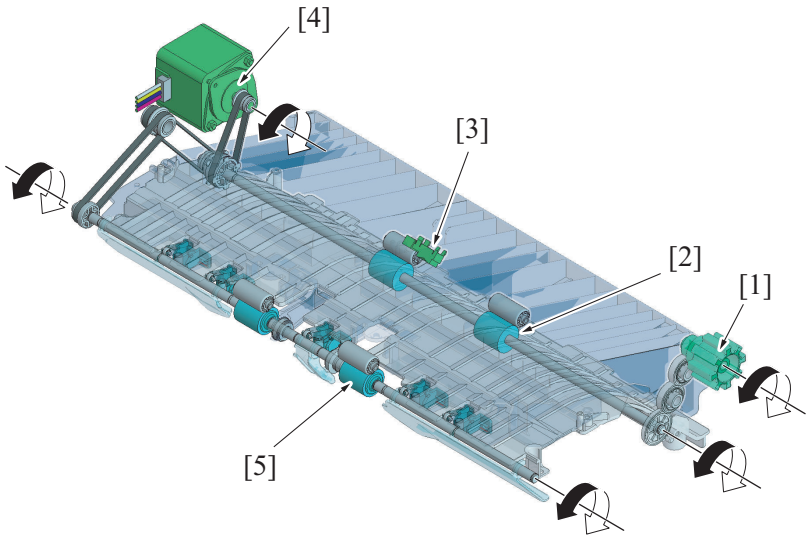

[1]	Jam removal dial	[2]	Paper conveyance roller
[3]	Paper feed sensor (PS101)	[4]	Paper conveyance motor (M101)
[5]	Receiving roller	-	-

6.2.3 Paper exit roller section drive

- The exit roller section has 2 types of drive mechanisms.

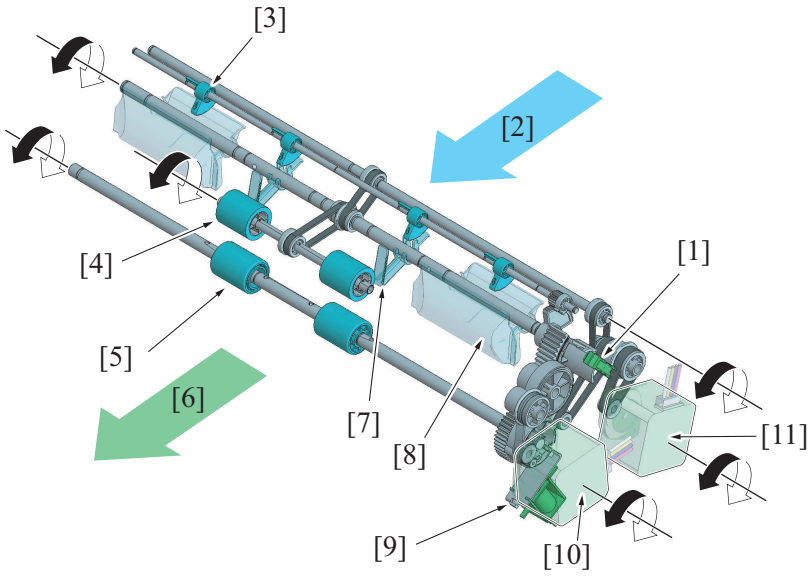

[1]	Pick up roller position sensor (PS105)	[2]	Direction of the transport (transport section)
[3]	Paper lift-up cam	[4]	Paper exit roller/upper
[5]	Paper exit roller/lower	[6]	Direction of the paper exit (receive section)
[7]	Paper guide	[8]	Paper guide
[9]	Paper exit roller solenoid (SD103)	[10]	Exit roller lift up motor (M104)
[11]	Paper exit motor (M102)	-	-

(1) Paper exit motor

- The paper exit motor drives the exit roller/upper and the exit roller/lower.
- The paper exit roller/upper is connected to the paper exit motor. Rotation of the paper exit motor rotates the exit roller/upper.
- The connection of the exit roller/lower and the exit motor is released while waiting. Turning on/off of the exit roller solenoid connects the exit roller/lower drive gear to rotate (forward direction*) the exit roller/lower.

NOTE

- **The paper exit roller/lower has the torque limiter. Therefore, when the reverse rotation force of over the predetermined value is applied from the paper exit roller/upper which is pressed at the time of FD alignment, the paper exit roller/lower rotates in reverse direction as the paper exit roller/upper rotates.**

Paper exit motor drive view

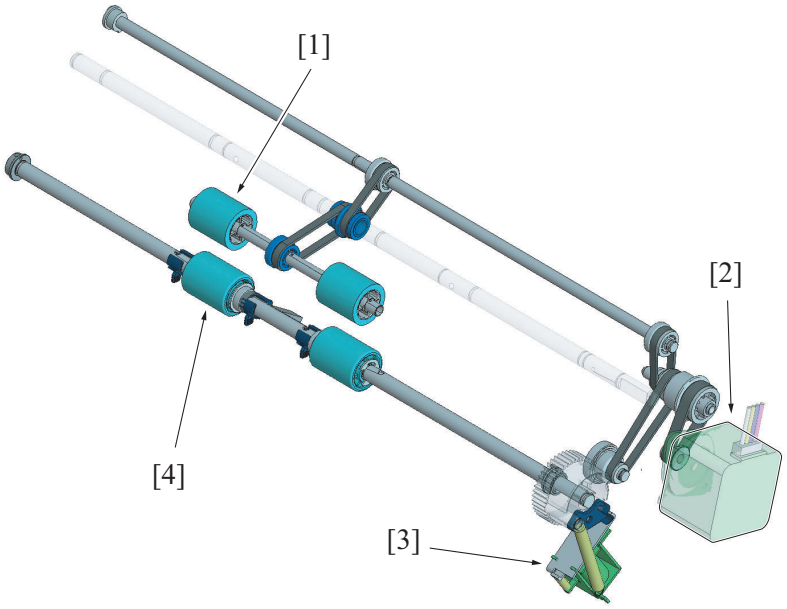

[1]	Paper exit roller/upper	[2]	Paper exit motor (M102)
[3]	Paper exit roller solenoid (SD103)	[4]	Paper exit roller/lower

Paper exit roller/lower drive front view

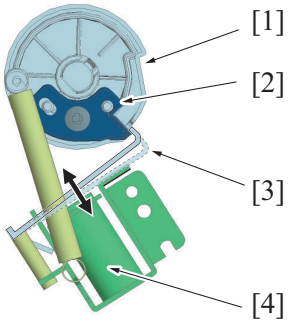

[1]	Paper exit roller/lower drive gear	[2]	Paper exit roller/lower drive gear lock plate
[3]	Rotation lock claw	[4]	Paper exit roller solenoid (SD103)

(2) Paper exit roller lift up motor

- The exit roller lift up motor drives the up/down operation of the paper exit roller/upper. It also drives the paper guide (2 points) and the paper guide (2 points). The paper exit roller/upper waits at the upper position. Rotation of the exit roller lift up motor moves the paper exit roller/lower down. (Drive source for rotating the paper exit roller/upper is the paper exit motor.)
- The exit roller lift up motor rotates the cam (4 points). When the cam rotates, the paper guide pushed up by the cam will be unlocked to move the paper guide down by its own weight.

Exit roller lift up motor drive view

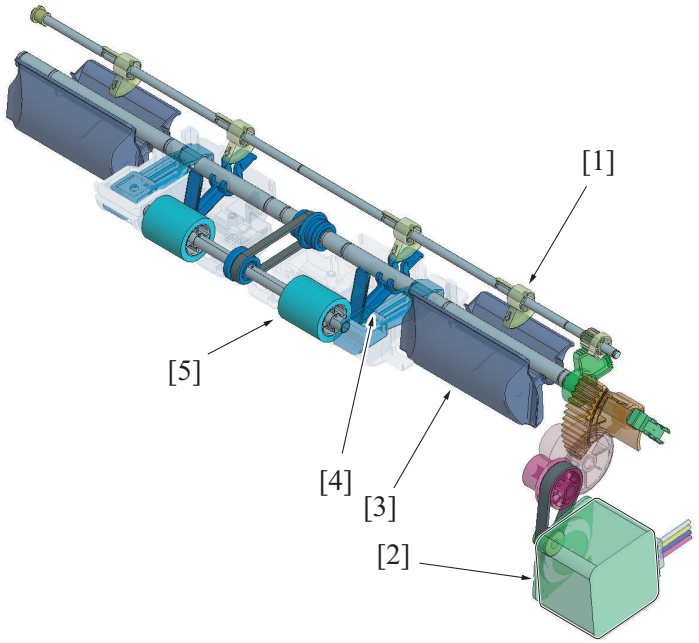

[1]	Cam	[2]	Exit roller lift up motor (M104)
[3]	Paper guide	[4]	Paper guide
[5]	Exit roller/upper	-	-

6.3 Operation

6.3.1 Paper conveyance/receiving roller section paper transport control

- The paper conveyance roller sends the paper transported from the paper exit section of the main body (or from the punch section) to the receiving roller.
- The receiving roller sends the paper transported from the transport roller to the receiving section or the alignment section.
- The paper feed sensor detects the front edge and the rear edge of the paper. This will make the unit to detect the transportation and path of the paper.
- When in punch mode, the paper conveyance roller and the receiving roller rotate in reverse direction to switchback the paper and punch the holes at the punching section.
  When the holes are punched, the paper conveyance roller and the receiving roller rotate in forward direction to send the paper to the receiving section or to the alignment section.
  For details on punching operation, see "PF.5.3.2 Punch control".

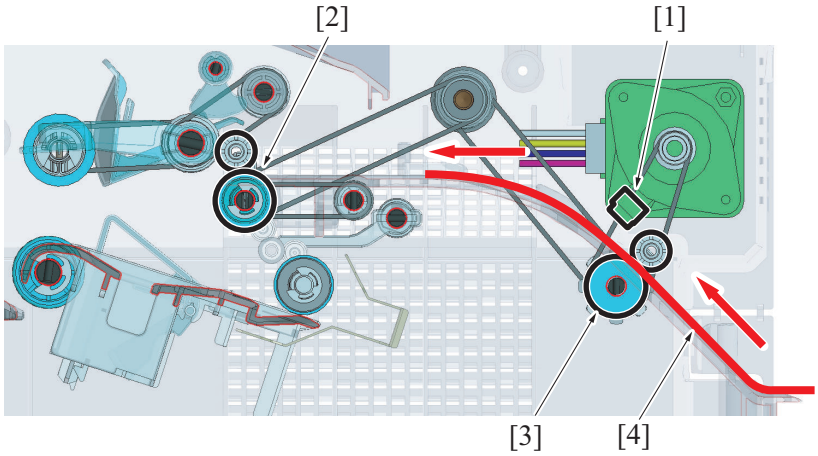

[1]	Paper feed sensor (PS101)	[2]	Receiving roller
[3]	Paper conveyance roller	[4]	Paper

6.3.2 Paper exit roller section paper transport control

(1) Non sort mode, Non group mode, Non staple mode, Sort mode, Group mode

- The paper guide waits at the upper position by the cam. When the cam rotates by the exit roller lift up motor, the paper guide will be unlocked and moves down to the lower position. The paper sent from the transport section will be led to the exit roller by the paper guide.
- The paper exit roller/upper moves down to hold the paper from the transport section with the exit roller/lower to discharge it to the exit tray.
- The paper surface detect sensor/1 detects that the paper is discharged to the exit tray by the actuator being pushed down while the paper passes through and then returned to the original position.

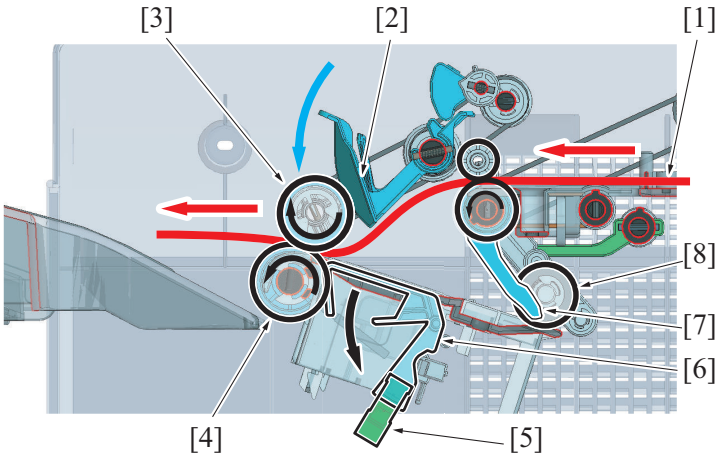

[1]	Paper	[2]	Paper guide
[3]	Paper exit roller/upper	[4]	Exit roller/lower
[5]	Paper surface detect sensor/1 (PS102)	[6]	Paper surface detect sensor/1 actuator
[7]	Batch weight guide	[8]	Alignment roller

(2) Sort offset function mode, Group offset function mode Staple mode

1. The paper exit roller/upper stops rotating at the upper position and waits.
   The paper exit roller/lower waits at the halt status.
2. The first paper is discharged [2] by the receiving roller [1], and moves down to the alignment tray by its own weight. [3]

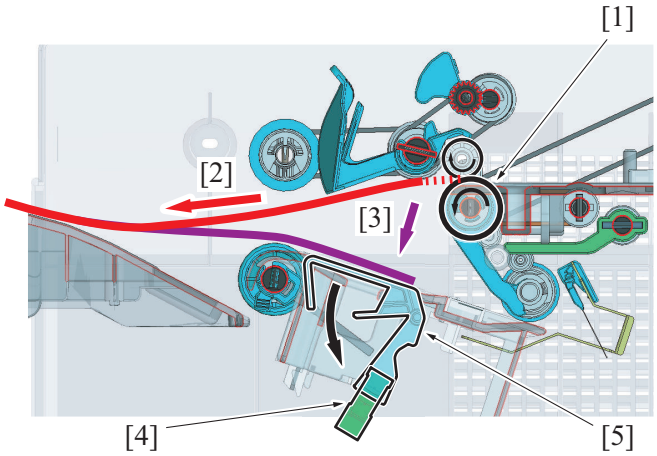

NOTE

- **The paper surface detect sensor/1 [4] detects that the paper is discharged to the alignment tray when the actuator [5] is pressed down by the paper.**

3. The paper exit roller/upper[1] moves down to hold the first paper on the alignment tray [2] with the paper exit roller/lower [3] to rotate rollers* in reverse direction and transport the paper to the alignment roller [5].

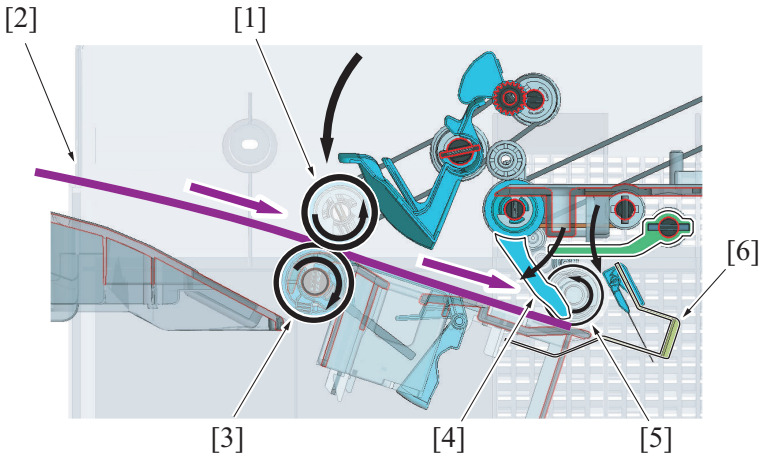

NOTE

- ***: The paper exit roller/lower [3] rotates in reverse direction driven by the paper exit roller/upper [1] rotates.**

4. The paper exit roller/upper [1] moves up and stops rotating.
5. The alignment roller [5] contacts the rear edge of the paper to the alignment plate [6] to align the paper. (paper FD alignment)
6. The alignment plate moves back and forth to align right and left of the paper. (paper CD alignment)
7. The batch weight guide [4] moves down to hold the rear end [2] of the aligned paper.
   For drive of the batch weight guide, see “PF.7.2.2.(3) Batch solenoid”.

NOTE
- **The batch weight guide [4] prevent the second paper and after to misalign the aligned paper [2]. For details, see "PF.7.3.2 Paper alignment control (paper FD alignment)".**

8. The second paper will be discharged over the first paper on the alignment tray.
9. The batch weight guide [4] moves up to release the rear end of the paper.
10. The paper exit roller/upper [1] moves down to hold the first and the second paper on the alignment tray with the paper exit roller/lower to rotate the paper exit roller/upper [1] in reverse direction, and transport it to the alignment roller [5] to align the rear edge of the paper.
11. The alignment plate moves back and forth to align the paper.

NOTE
- **The second paper and after will be transported in the same way.**
- **For details of the paper alignment control, see "PF.7.3.1 Paper alignment overview"**

12. When the last paper is aligned, the paper exit roller/upper [2] will move down to hold all the paper on the alignment tray [3] with the exit roller/lower [4].

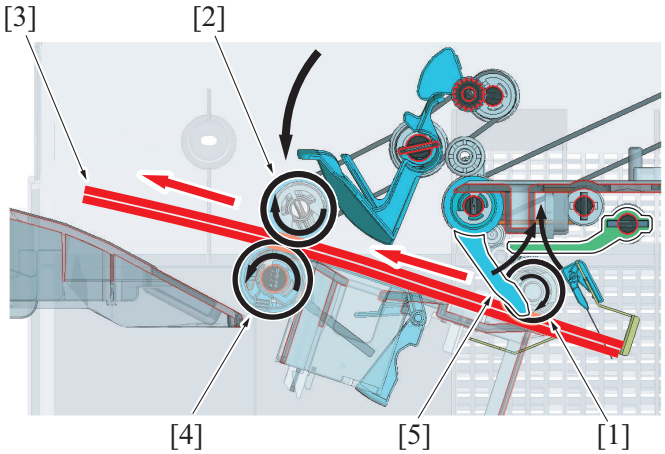

NOTE
- **When in staple mode, stapling is conducted after paper alignment is finished. For details on stapling control, see "PF.8.2.2 Stapling control".**
- **For control after the paper is discharged to the exit tray, refer to the receiving section.**

13. The batch weight guide [5] moves up to release the rear edge of the paper [2].
14. The paper exit roller/upper [2], exit roller/lower [4], and the alignment roller [1] rotate to discharge the paper [3] to the exit tray. (The paper exit roller/upper [2] and paper exit roller/lower [4] rotate in forward direction, and the alignment roller [1] rotates in reverse direction.)

6.3.3 Paper exit roller up/down control

The paper exit roller moves up/down when transporting the paper from the paper conveyance or receiving roller section to the receiving section or to the alignment section.

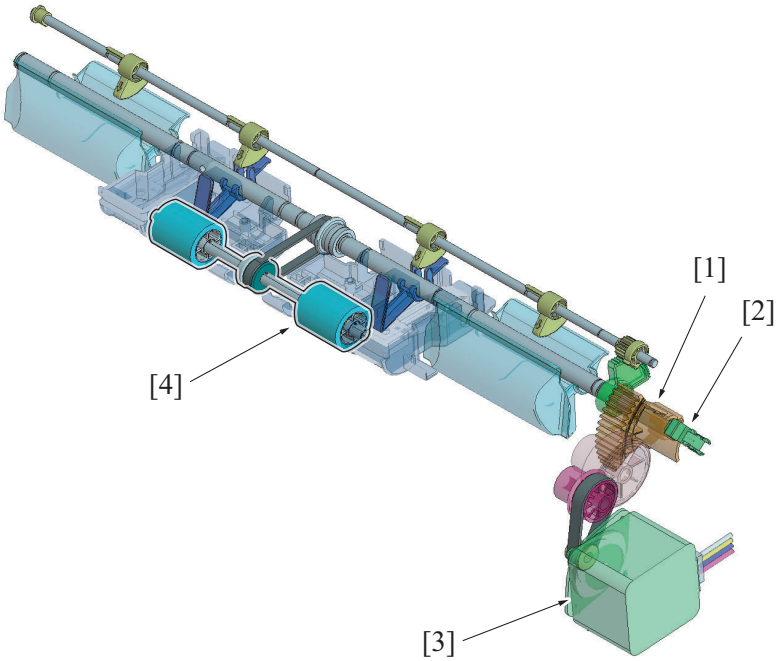

[1]	Exit roller lift up gear	[2]	Pick up roller position sensor (PS105)
[3]	Exit roller lift up motor (M104)	[4]	Paper exit roller/lower

(1) Lift up control in non-sort mode, non-group mode, non-staple mode, sort mode, and group mode

1. The paper exit roller/upper is moved down from the upper position (home position) to the lower position (press position) to hold the paper with the exit roller/upper and the paper exit roller/lower to rotate the roller forward and to discharge the paper to the exit tray.
2. The paper exit roller/upper moves up when the paper transportation is complete. (returns to the home position)

(2) Lift up control in sort offset mode, group offset mode, and staple mode

1. The paper exit roller/upper waits at the upper position (home position) and discharges the paper to the alignment tray.
2. The paper exit roller/upper moves down from the upper position to the lower position (press position).
3. The paper exit roller/upper rotates in reverse direction and sends the paper to the alignment section.
   NOTE
   - **When transporting the paper to the alignment section, only the exit roller/upper rotates in reverse direction.**
4. The paper is aligned at the alignment section. When aligning the paper, the paper exit roller/upper waits at the upper position.
5. When aligning and stapling are finished, the paper exit roller/upper moves down to hold the paper with the paper exit roller/upper and the paper exit roller/lower, and rotates the roller in forward direction to discharge the paper to the exit tray.
6. When the paper transportation is finished, the paper exit roller/upper moves up. (returns to the home position)

(3) Paper exit roller position detect control

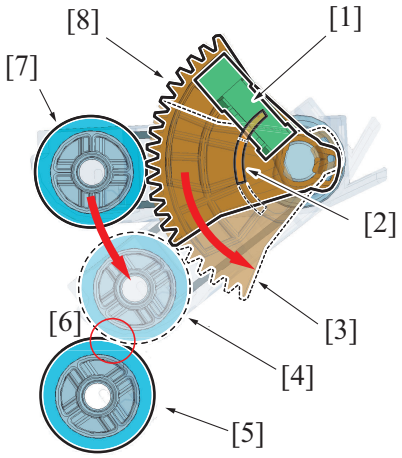

1. The paper exit roller/upper waits at the upper position [7]. (home position)
   The light shield plate [2] of the gear [8] installed on the lift up shaft for the paper exit roller/upper blocks the pick up roller position sensor [1] and detects that the paper exit roller/upper is at the home position [7].
2. When the lift up motor of the paper exit roller rotates, the gear on the lift up shaft for the exit roller rotates [3] to move the paper exit roller/upper [4] down to be pressed [6] to the paper exit roller/lower [5]. (Paper exit roller/upper at press position)
   When the gear [3] rotates, the light shielding plate [2] also rotates to unblock the pick up roller position sensor [1]. This process detects that the paper exit roller/upper [4] position is at the press position.

Paper exit roller/upper position	Pick up roller position sensor
Upper position (home position)	Blocked
Lower position (pressure position)	Unblocked

6.3.4 Paper exit roller/lower drive connecting control

- It rotates the paper exit roller/lower when transporting the paper from the transport section to the receiving section or to the alignment section.
- The connection of the paper exit roller/lower and the paper exit motor is released by the paper exit roller solenoid when waiting. On/off of the paper exit roller solenoid connects the paper exit roller/lower to the paper exit motor, and rotates as the paper exit motor rotates. When the paper exit roller/lower and the paper paddle rotate one revolution clockwise (forward direction), the connection with the paper exit motor will be released and stop.
  NOTE
  - **For details of the paper weight paddle control, see "PF.9.3.1 Paper exit paddle control"**

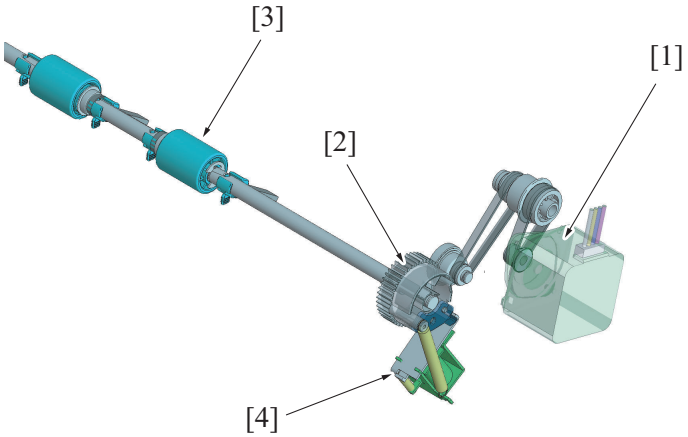

[1]	Paper exit motor (M102)	[2]	Paper exit roller/lower drive gear
[3]	Paper exit roller/lower	[4]	Paper exit roller solenoid (SD103)

(1) Paper exit roller/lower drive connecting process

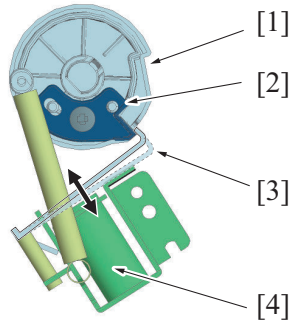

1. Connection of the paper exit roller/lower with the exit motor is released while waiting. On/off of the paper exit roller solenoid [4] operates the rotation lock claw [3] for the paper exit roller solenoid to release the lock plate [2] installed on the paper exit roller/lower drive gear [1].

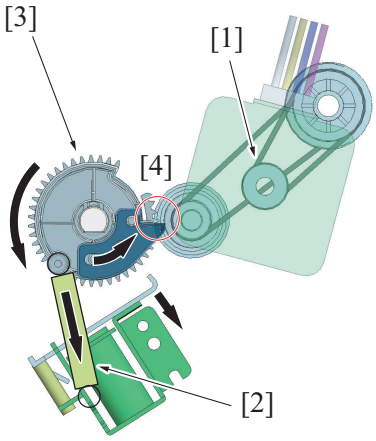

2. By the paper exit roller/lower drive gear [3] being rotated by the spring force [2], it will be connected to the drive mechanism [4]. This process transfers drive force to the paper exit roller/lower drive gear to rotate the paper exit roller/lower.

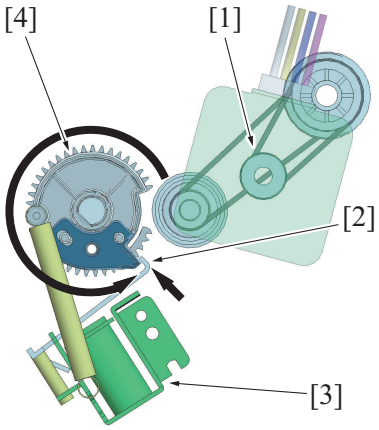

3. The paper exit roller/lower will be released from the paper exit motor [1] drive mechanism by the shape of the paper exit roller/lower drive gear [4] after rotating about one revolution. (Connection between the paper exit roller/lower and the paper exit motor [1] will be released.)
4. The paper exit roller/lower drive gear [4] will be locked to prohibit rotation by the rotation lock claw [2] of the paper exit roller solenoid [3]. (The exit roller/lower stops rotating.)

7. ALIGNMENT SECTION

7.1 Configuration

- In the alignment section, paper transported from the transport section is aligned and delivered to the paper exit tray.

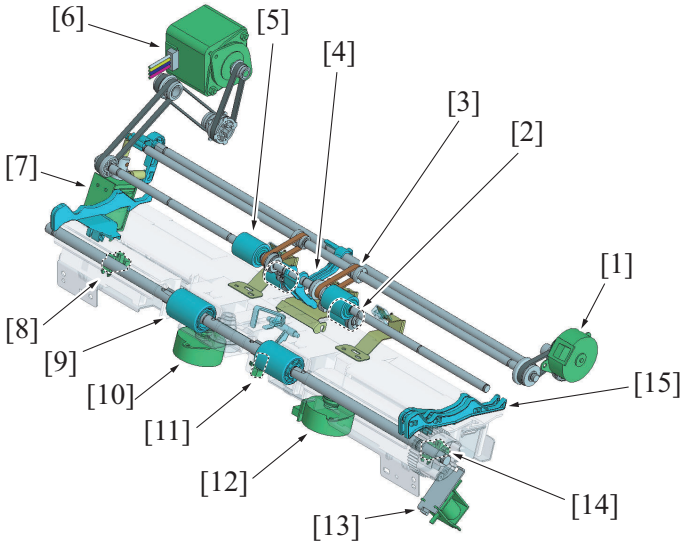

[1]	Alignment roller motor (M103)	[2]	Alignment roller
[3]	Drive connecting belt	[4]	Batch weight guide
[5]	Receiving roller	[6]	Paper conveyance motor (M101)
[7]	Batch solenoid (SD102)	[8]	Alignment plate home sensor/R (PS109)
[9]	Paper exit roller/lower	[10]	Alignment motor/R (M106)
[11]	Paper surface detect sensor/1 (PS102)	[12]	Alignment motor/F (M105)
[13]	Paper exit roller solenoid (SD103)	[14]	Alignment plate home sensor/F (PS108)
[15]	Alignment plate/Fr	-	-

7.2 Drive

7.2.1 Drive outline

The driving source of the alignment section is the paper conveyance motor, alignment roller motor, batch solenoid, alignment motor, and paper exit motor, and the following parts are driven.

Section	Driving source	Driving parts	Function
Alignment roller section	Paper conveyance motor	Receiving roller	Transports paper to the alignment tray.
	Alignment roller motor	Alignment roller	• Switchbacks the paper to align the rear edge of the paper. (FD alignment operation) • The aligned paper will be discharged to the exit tray.
	Batch solenoid	Batch lever	It holds the rear edge of the paper on the alignment tray. It prevents the aligned paper to be misaligned by the paper that follows.
Alignment tray section	Alignment motor	Alignment plate /Fr	It moves the alignment plate/Fr forward and backward to align the paper. (CD alignment operation)
		Alignment plate /Rr	It moves the alignment/Rr forward and backward to align the paper. (CD alignment operation)
	Paper exit motor	Paper exit roller/lower	• It transports the paper to the alignment tray. (switchback) • Exits paper to the paper exit tray.
		Paper exit roller/upper	Exits paper to the alignment tray.
		Paper exit paddle	

7.2.2 Alignment roller section

There are 3 types of drive mechanisms for the alignment roller section.

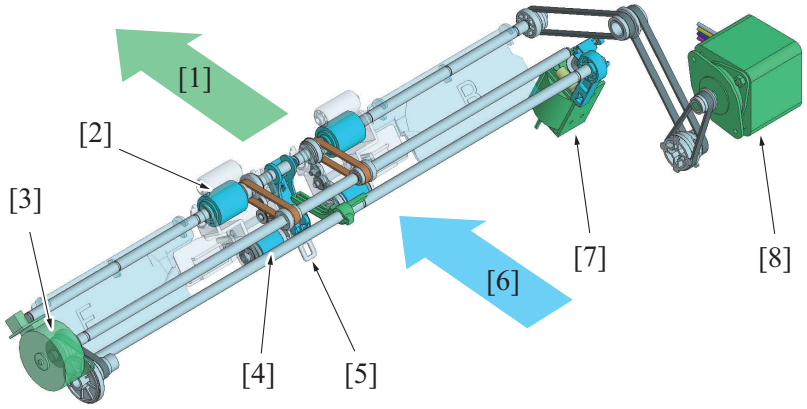

[1]	Direction of the paper exit (receive section)	[2]	Receiving roller
[3]	Alignment roller motor (M103)	[4]	Alignment roller
[5]	Paper weight guide	[6]	Direction of the paper transport (transport section)
[7]	Batch solenoid (SD102)	[8]	Paper conveyance motor (M101)

(1) Paper conveyance motor

- The receiving roller is driven by the paper conveyance motor.
- For details of the receiving roller drive, see "PF.6.2.2 Paper conveyance/receiving roller section drive".
- The receiving roller is installed on the drive shaft for the receiving roller. It rotates by the drive force of the transport motor.

NOTE

- **The drive transmission pulley is not fixed to the receiving roller's drive shaft. Therefore, the alignment roller does not rotate even when the transport motor rotates.**

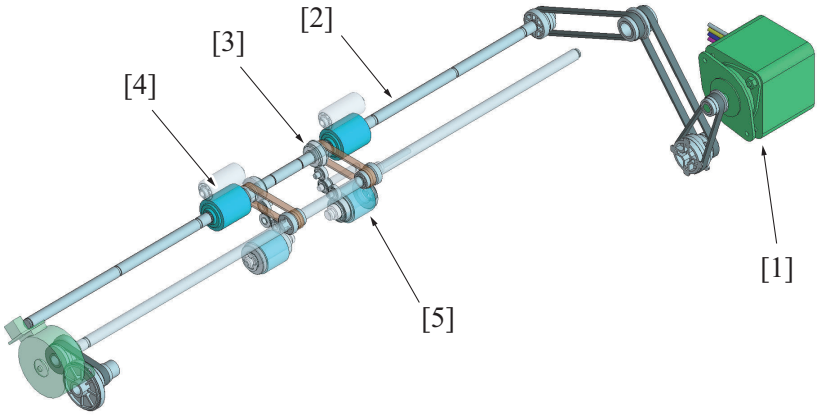

[1]	Paper conveyance motor (M101)	[2]	Receiving roller drive shaft
[3]	Drive connecting pulley	[4]	Receiving roller
[5]	Alignment roller	-	-

(2) Alignment roller motor

- The alignment roller is driven by the alignment roller motor.
- The alignment roller rotates by the drive force of the alignment roller motor through the drive transmission pulley on the drive shaft for the receiving roller.

NOTE

- **The drive transmission pulley is not fixed to the receiving roller's drive shaft. Therefore, the receiving roller does not rotate even when the alignment roller motor rotates.**

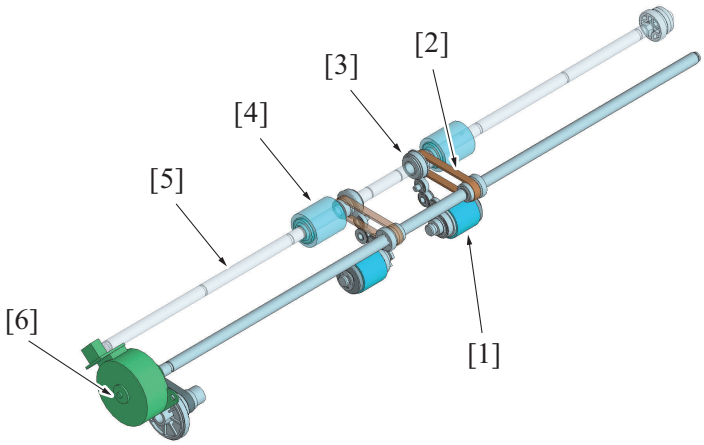

[1]	Alignment roller	[2]	Drive connecting belt
[3]	Drive connecting pulley	[4]	Receiving roller
[5]	Receiving roller drive shaft	[6]	Alignment roller motor (M103)

(a) Enlarged view of the alignment roller drive section

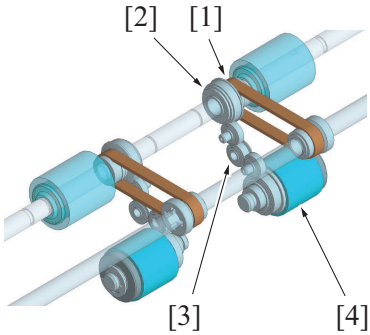

[1]	Drive connecting belt	[2]	Drive connecting pulley
[3]	Drive connecting gear	[4]	Alignment roller

(b) Alignment roller drive section front view

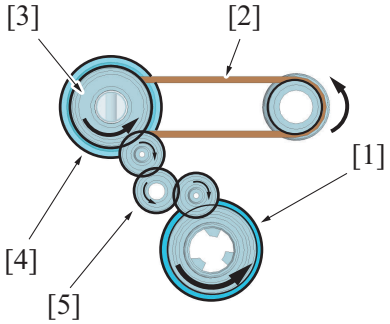

[1]	Alignment roller	[2]	Drive connecting belt
[3]	Drive connecting pulley	[4]	Receiving roller
[5]	Drive connecting gear	-	-

(3) Batch solenoid

- The batch lever is driven by the batch solenoid.
- The batch lever and the batch guide wait at the upper position by the spring force. (home positions)
- When the batch solenoid turns on, the drive shaft for the batch lever rotates to rotate the batch lever downward.
- The batch guide is pressed down by the batch lever moving downward.
- When the batch solenoid turns off, the drive shaft for the batch lever rotates by the spring force to return the batch lever and the batch guide to the upper position.

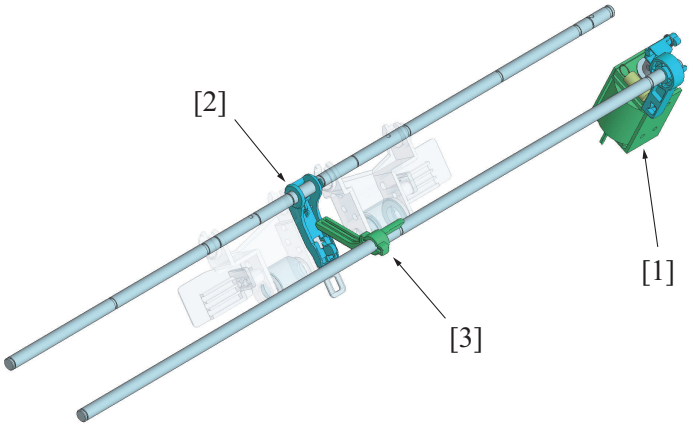

[1]	Batch solenoid (SD102)	[2]	Batch guide
[3]	Batch lever	-	-

(a) Batch guide drive section front view

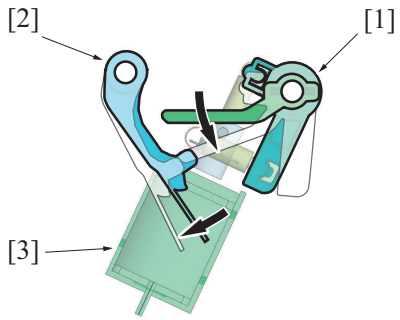

[1]	Batch lever	[2]	Batch guide
[3]	Batch solenoid (SD102)	-	-

7.2.3 Alignment tray section

- The alignment tray section has 2 types of drive mechanisms

(1) Alignment motor

- The alignment motor drives the alignment plate back and forth.
- The alignment plate/Fr, and the alignment plate/Rr have individual alignment motors. This enables each alignment plate to independently move back and forth.

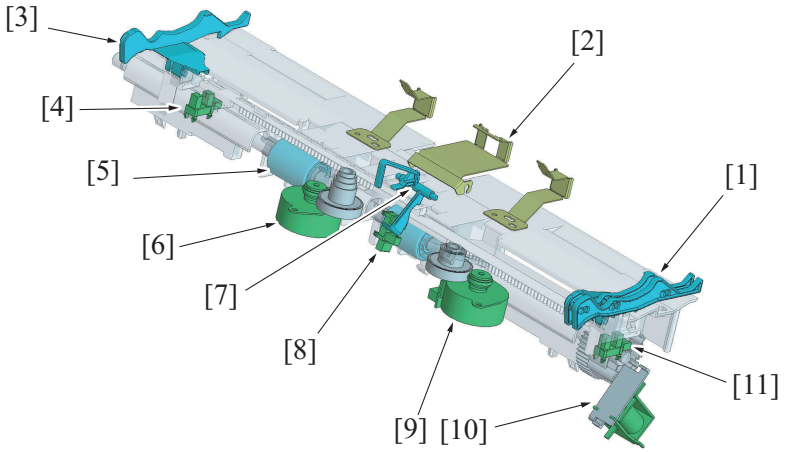

[1]	Alignment plate/Fr	[2]	Paper stopper
[3]	Alignment plate/Rr	[4]	Alignment plate home sensor/R (PS109)
[5]	Paper exit roller/lower	[6]	Alignment motor/R (M106)
[7]	Paper surface detect sensor/1 actuator	[8]	Paper surface detect sensor/1 (PS102)
[9]	Alignment motor/F (M105)	[10]	Paper exit roller solenoid (SD103)
[11]	Alignment plate home sensor/F (PS108)	-	-

(2) Paper exit motor

- The paper exit roller/lower is driven by the paper exit motor.
  For details of the paper exit roller/lower, see “PF.6.2.2 Paper conveyance/receiving roller section drive” and “PF.6.3.4.(1) Paper exit roller/lower drive connecting process”.

7.3 Operation

7.3.1 Paper alignment overview

- At the alignment section, the paper is aligned for the jobs in sort offset mode, group offset mode, and staple mode.
- The paper is discharged to the exit tray without being in alignment for non-sort mode, non-group mode, non-staple mode, sort mode, and group mode.
- When the paper is aligned, it is switchbacked to the alignment section individually. When alignment is finished, the paper or the batch is discharged to the exit tray.
- There are two types for paper alignment as described below.
  - Paper FD alignment: The alignment operation which aligns the rear edge of the paper in transportation direction, is called "paper FD alignment".
  - Paper CD alignment: The alignment operation which aligns both sides of the paper in width direction, is called "paper CD alignment".

7.3.2 Paper alignment control (paper FD alignment)

- The operation to align rear edge of the paper in transportation direction is called "paper FD alignment".
- The paper from the transport section will be transported to the alignment tray by the alignment roller. The rear edge of the paper then is aligned by contacting the rear edge of the paper to the paper stopper.

- The batch guide moves down to hold the rear edge of the aligned paper.
  NOTE
  - **The batch guide moves up when the next sheet of paper is transported to the alignment tray, as well as when the sheet is discharged from the alignment tray to release the paper.**
  - **The batch guide moves up when the next sheet of paper is transported to the alignment tray, as well as when the paper is discharged from the alignment tray to release the paper.**

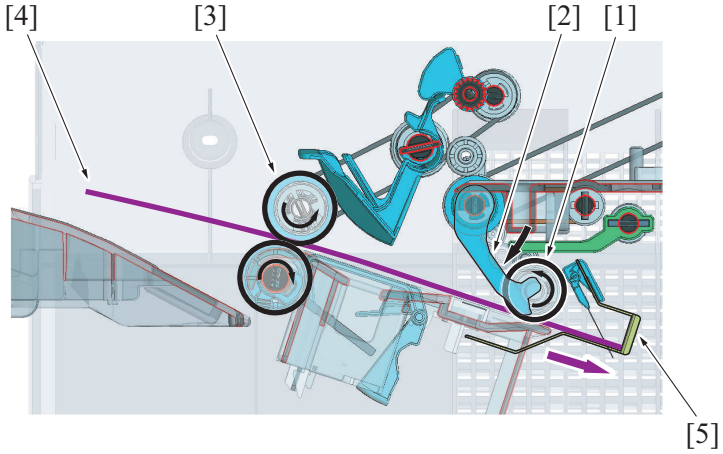

[1]	Alignment roller	[2]	Batch guide
[3]	Paper exit roller/upper	[4]	Paper
[5]	Paper stopper	-	-

7.3.3 Paper alignment control (paper CD alignment)

- The operation to align both sides of the paper in the width direction is called "paper CD alignment".
- The paper from the transport section is transported to the alignment tray by the alignment roller. The paper is aligned by contacting the alignment plate/Fr and Rr to both sides (forward-backward direction) of the paper.
- The home position of the alignment plate is detected by the alignment plate home sensor. (alignment plate home sensor/F, R)

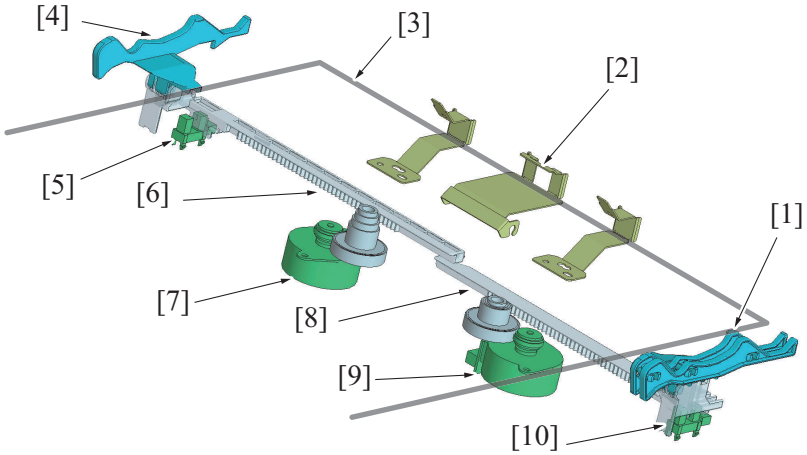

[1]	Alignment plate/Fr	[2]	Paper stopper
[3]	Paper	[4]	Alignment plate /Rr
[5]	Alignment plate home sensor/R (PS109)	[6]	Slide gear/Rr
[7]	Alignment motor/R (M106)	[8]	Slide gear/Fr
[9]	Alignment motor/F (M105)	[10]	Alignment plate home sensor/F (PS108)

(1) Alignment plate control when in staple mode

- When the staple mode is commended, the alignment plate/Fr and the alignment plate/Rr shift according to the paper width. The paper is aligned by the alignment plates contacting from both front and rear sides.
- The above alignment operation will be conducted for the paper for every job to align the edges of the paper batch. When the alignment is finished, stapling process will be conducted.
  NOTE
  - **When printed in staple mode, paper batch will be stapled and be discharged to the exit tray without being shifted.**

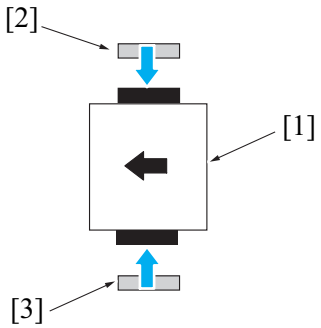

[1]	Paper	[2]	Alignment plate/Rr (shifting to the front side)
[3]	Alignment plate/Fr (shifting to the rear side)	-	-

(2) Alignment plate control for sort offset mode and group offset mode

- When commanding offset in sort mode or group mode, the alignment plate/Fr or the alignment plate/Rr presses the paper from one side to the far side (or front side) depending on the paper width. This process shifts the paper position.
- The paper batches will be sorted out by repeating the process above.

NOTE

- **The offset value (shift value) of the paper is 30 mm.**
- **When "sort out" is not commanded in the sort mode or the group mode, only the sort print/group print will be conducted, and the paper will be discharged to the exit tray without being shifted.**

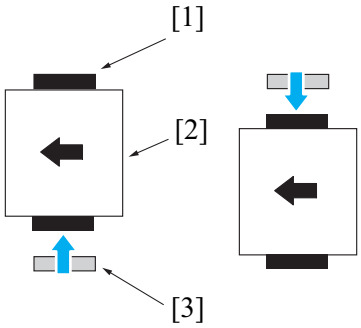

[1]	Alignment plate/Rr	[2]	Paper
[3]	Alignment plate/Fr	-	-

(a) Operation when shifting the paper to the front side

1. The alignment plate/Fr [3] will shift to the reference position at the front side. (The reference position differs depending on the paper size.)
2. The alignment plate/Rr [2] shifts according to the paper width. The paper [1] is pressed by the alignment plate/Rr [2] to be shifted to the front side.

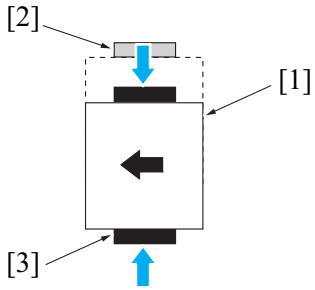

(b) Operation when shifting the paper to the rear side

1. The alignment plate/Rr [2] will shift to the reference position at the rear side. (The reference position differs depending on the paper size.)
2. The alignment plate/Fr [3] shifts according to the paper width. The paper [1] is pressed by the alignment plate/Rr [2] to be shifted to the rear side.

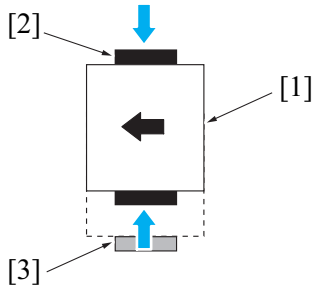

(c) Paper receiving quantity

- When the quantity of the paper received to the alignment tray in sort offset mode or in group offset mode reaches to the set value, the paper batch in the alignment tray will be discharged to the exit tray.
  NOTE
  Sample process for sort out:
  1. **When the job requires making of two copies with 10 sheets A4 size document in sort offset mode, the paper batch is discharged when the sheet quantity reached 5 for the first copy.**
  2. **The remaining 5 sheets will be aligned to be discharged with the same shift position. This will make 10 aligned and discharged sheets on the exit tray.**
  3. **Then the shift position will be changed from the 1st copy to sort out the 2nd copy.**
  4. **The process for the second copy leaves 2 copies with 10 sheets each on the exit tray.**

Maximum batch discharge quantity for sort out

Paper size	Paper type	
	• Thin paper (52 g/m^2 to 59 g/m^2) • Plan paper (60 g/m^2 to 90 g/m^2) • Recycled paper (52 g/m^2 to 90 g/m^2)	Thick paper (91 g/ m^2 to 300 g/ m^2)
216 mm or less	5 sheets	3 sheets
More than 216 mm	4 sheets	

- When the "Paper load quantity" or "Paper load height" of the paper in the exit tray reaches to the specified value during sort offset mode or group offset mode, the exit tray is judged to be full.
  Amount of paper stacking
  NOTE
  - **The paper load height is detected by the paper level detection function.**
    For details, see "PF.9.3.3 Paper level detect control".

7.3.4 Alignment tray paper detect control

- The alignment tray has paper surface detect sensor/1, which detects the paper path and the paper receiving in the alignment tray.
- Paper surface detect sensor/1, detects that the paper is transported to the alignment tray by the actuator being pressed down by the paper which passes it.

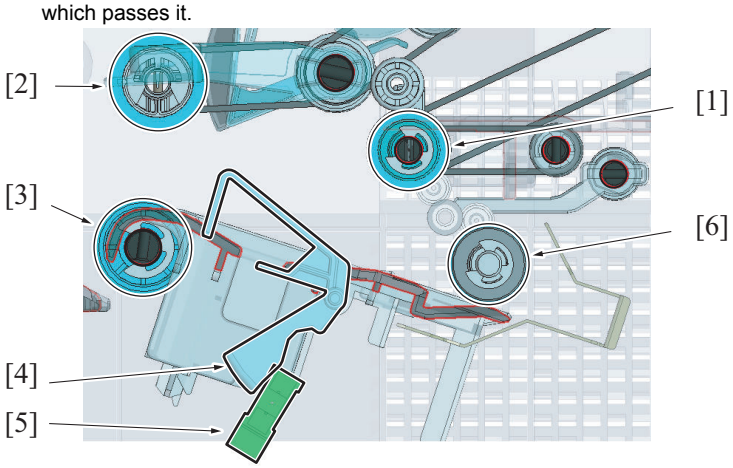

[1]	Receiving roller	[2]	Paper exit roller/upper
[3]	Paper exit roller/lower	[4]	Paper surface detect sensor/1 actuator
[5]	Paper surface detect sensor/1 (PS102)	[6]	Alignment roller

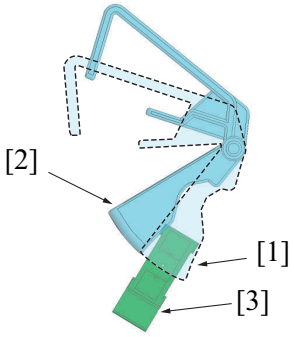

[1]	Paper surface detect sensor/1 actuator: The paper is stored (blocked)	[2]	Paper surface detect sensor/1 actuator: Paper is not stored (unblocked)
[3]	Paper surface detect sensor/1 (PS102)	[4]	

(1) When in non-sort mode, non-group mode, non-staple mode, sort mode, and group mode

- The paper surface detect sensor/1 detects that the paper is transported to the paper exit roller /lower by the actuator being pressed down by the paper which passes it.
- When the paper alignment is finished, the sensor detects that the paper is discharged to the exit tray by the actuator returned to the original position with the paper discharged from the alignment tray.

(2) When in sort offset mode, group offset mode, and staple mode

- The paper surface detect sensor/1 detects that the paper is stored to the alignment tray by the actuator being pressed down by the switchbacked paper.
- When the alignment is finished, the sensor detects that the paper is discharged to the exit tray by the actuator returned to the original position.

8. STAPLER SECTION

8.1 Configuration/Drive

- The stapler waits at the home position at the front side.
- The stapler movement motor moves the stapler.
- When the stapler movement motor installed on the stapler mounting table rotates, the drive connecting gear rotates. When the drive connecting gear rotates, the stapler mounting plate and the stapler, shifts back and forth along the slide gear.

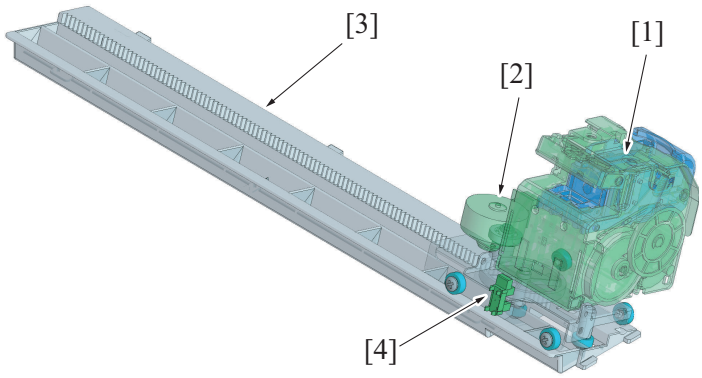

[1]	Stapler	[2]	Stapler movement motor (M107)
[3]	Slide gear	[4]	Stapler home sensor (PS110)

8.1.1 Stapler drive section top view

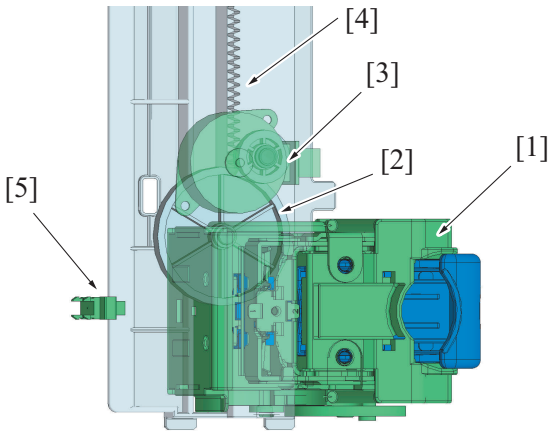

[1]	Stapler unit	[2]	Stapler drive connecting gear
[3]	Stapler movement motor (M107)	[4]	Slide gear
[5]	Stapler home sensor (PS110)	-	-

8.2 Operation

8.2.1 Stapler positioning control

- The home position of the stapler is detected by the stapler home sensor.
- When in corner staple mode, the stapler waits at the home position and staples when the paper alignment is finished.
- When in 2 points staple mode, the stapler shifts to the first stapling position to conduct stapling. Then the stapler shifts to the second stapling position to conduct stapling. When the stapling is finished, the stapler returns to the home position.
- The stapling position is controlled besed on the number of pulses generated by the stapler movement motor. No position sensors are provided for the corner staple and two-point staple functions.

8.2.2 Stapling control

(1) Stapling operation

- The Stapling operation is driven by the stapler motor.
- In the stapling operation, the clincher staple arm is lowered by the stapler motor. The clincher staple arm presses the sheets. (This is called clamp operation.) Then a staple is pushed up by the staple arm from the stapler side. The staple is pressed through the sheets and bent from the clincher staple arm side, so that the sheets are fastened together.
- The stapler motor then lifts the clincher staple arm and lowers the staple arm to complete the stapling operation.
- The number of sheets that user wishes to staple are placed into the alignment tray and the stapling operation is performed. However, if the number exceeds the upper limit, the set of sheets is delivered to the exit tray without being stapled.

Maximum stapling quantity

Paper size	Maximum stapling quantity
A4S or less (small size)	50 sheets *
Foolscap or more (large size)	30 sheets

- *: When there are small size sheets and large size sheets with same width at the same time, they are judged as large size sheets, and the maximum staple quantity becomes 30.
  Example: When there are A4 LEF and A3 SEF, the maximum stapling quantity is 30.

Overall view

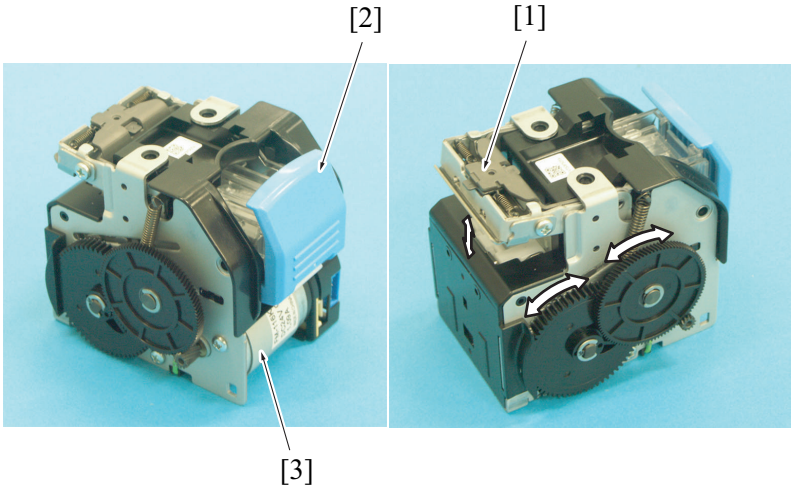

[1]	Clincher staple arm	[2]	Staple cartridge
[3]	Stapler motor	-	-

Front view

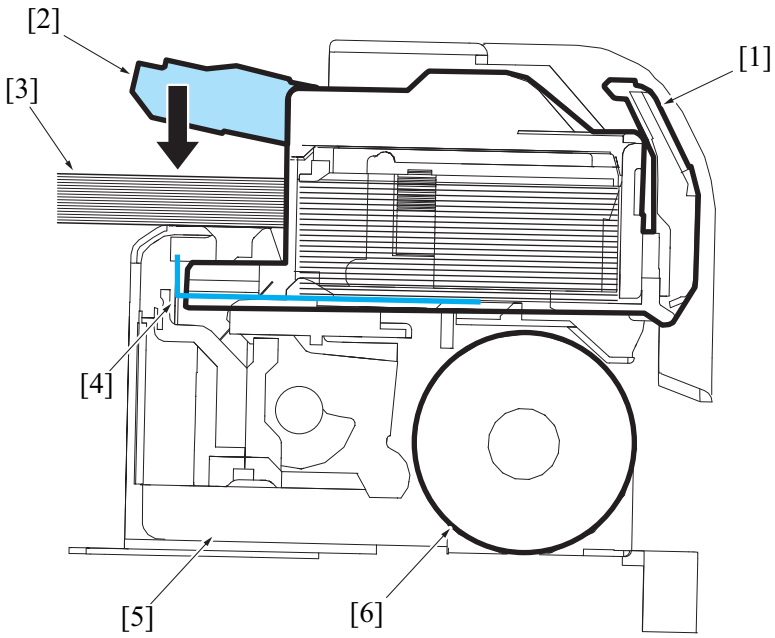

[1]	Staple cartridge	[2]	Clincher staple arm
[3]	Paper bunch	[4]	Staple sheet (staple)
[5]	Stapler	[6]	Stapler motor (M14)

8.2.3 Staple empty detection control

(1) Staple cartridge

- The stapler is provided with a staple cartridge used only for the stapler.
- To reload the stapler with staples, the staple cartridge is first loaded with staples (staple sheet type: 5000 staples) and then the cartridge is attached to the stapler.
  For information on how to load staplers, refer to the user's guide.

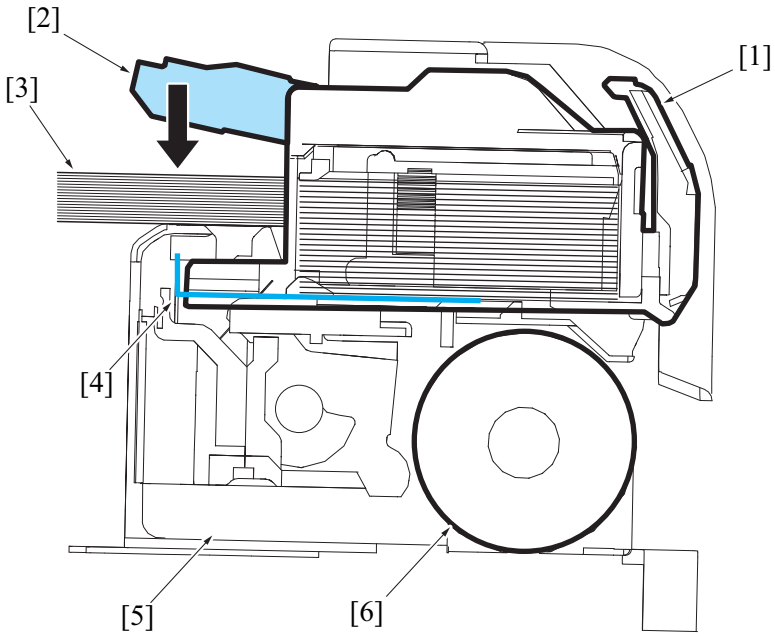

[1]	Staple cartridge	[2]	Clincher staple arm
[3]	Paper bunch	[4]	Stapler sheet (Staple)
[5]	Stapler	[6]	Stapler motor

(2) Staple empty detection mechanism

- The stapler includes the self-priming sensor and staple empty sensor to detect the status of the staple cartridge and staples.
- The staple cartridge is loaded with staple sheets, and a staple sheet is conveyed to the clinch position (staple position) from the lowest one.

State where staple sheets are loaded

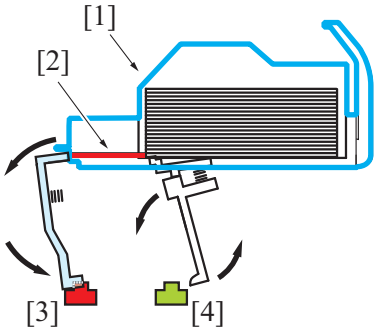

[1]	Staple cartridge (loaded with staple sheets)	[2]	Staple sheet fed from the cartridge
[3]	Self-priming sensor (blocked)	[4]	Staple empty sensor (unblocked)

- While the staple cartridge is loaded, if the trailing edge of the last staple sheet in the cartridge passes the actuator of the staple empty sensor, the actuator is raised by the spring force.
- When the actuator is raised, the staple empty sensor is blocked and machine determines that the cartridge is empty. The control panel displays to warn of the staple empty message.

State where the last staple sheet is fed

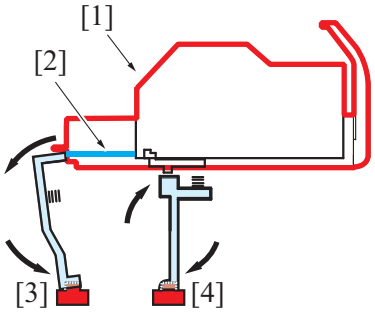

[1]	Staple cartridge (staple empty)	[2]	Staple sheet (remainder)
[3]	Self-priming sensor (blocked)	[4]	Staple empty sensor (blocked)

State where staple sheet runs out

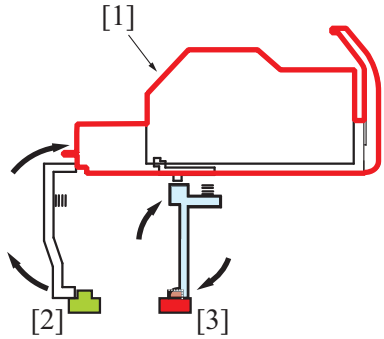

[1]	Staple cartridge (empty)	[2]	Self-priming sensor (unblocked)
[3]	Staple empty sensor (blocked)	-	-

- Even when the staple empty sensor detects the trailing edge of the last staple sheet, the staple sheet (staples: about 20) fed from the cartridge remains at the cartridge's front section. In this case, the actuator of the self prime sensor is pressed down by the leading edge of the staple sheet.
- If the actuator is pressed down, the self prime sensor is blocked and machine determines that the staple sheet is fed to the clinch position (staple position).
- Even when staple empty is detected, printing is not disabled. Paper is delivered without being stapled.
- After staple empty is detected, when the staple cartridge is loaded with staple sheets and the stapler is loaded with the cartridge, the actuator of the staple empty sensor is pressed down by the staple sheets.
- When the actuator is pressed down, the staple empty sensor is unblocked and staple empty condition is cleared. At this point, the staple empty sensor detects the staple sheets (unblocked). However, if the leading edge of the staple sheet cannot be detected by the self-priming sensor (unblocked), the clinch operation is repeated up to 20 times to feed the leading edge of the staple sheet to the position (clinch position) where it can be detected by the self-priming sensor.

State where staple sheet runs out

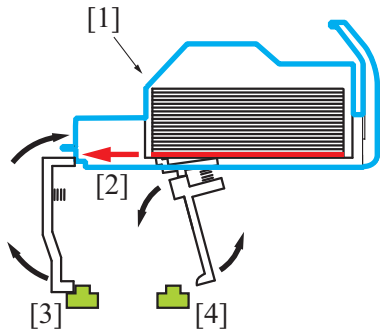

[1]	Staple cartridge (loaded with staple sheets)	[2]	Staple sheet is fed by clinch operation.
[3]	Self-priming sensor (unblocked)	[4]	Staple empty sensor (unblocked)

- If the self prime sensor cannot detect the leading edge of the staple sheet after clinch operations, machine determines that the staple sheet is not properly fed (staple sheet is not properly set) and the control panel displays to warn of the staple empty message.
- If the staple empty message appears even after staple sheets are loaded, check whether the staple sheets is properly set in the staple cartridge. If the cartridge is clogged with a staple sheet, clear the sheet.
- If staple empty occurs, the stapler stays at the stapler home position (position where staples can be supplied only by opening the front door).

(a) When the staple cartridge is not loaded

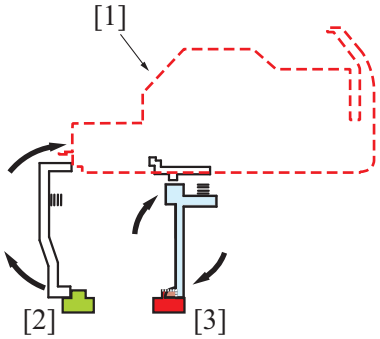

[1]	Staple cartridge (not mounted)	[2]	Self prime sensor (unblocked)
[3]	Staple empty sensor (blocked)	-	-

- The actuator of the staple empty sensor is raised by the spring force. The staple empty sensor is blocked.
- If the staple empty message appears even after staple sheets are loaded, check whether the staple sheets is properly set in the staple cartridge. If the cartridge is clogged with a staple sheet, clear the sheet.

- The message to warn the staple empty is displayed on the control panel.

8.2.4 Clogged staple detection control

- Stapling operation is performed by lowering of the clincher staple arm and lifting of the staple arm.
- The staple arm position is detected by the stapler home sensor located in the stapler.
- The stapler determines that the stapling operation is completed if the staple arm returns to the home position within the specified time after the stapling operation. If the staple arm does not return to the home position after the specified time has passed, the machine determines that staple trouble has occurred and trouble code C1109 appears on the control panel.

9. RECEIVING SECTION

9.1 Configuration

- In the receiving section, paper transported into the finisher is placed into each tray. As the tray has the up/down mechanism, the tray moves down depending on the amount of paper loaded, so that up to 500 sheets of paper can be inserted. The tray also includes the mechanism for detecting the amount of loaded paper.

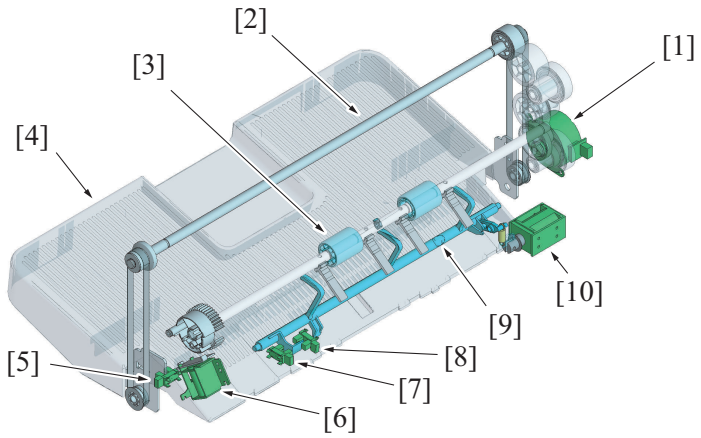

[1]	Tray lift up motor (M109)	[2]	Shaft
[3]	Paper exit roller/lower	[4]	Paper exit tray
[5]	Paper exit tray home sensor (PS107)	[6]	Paper exit roller solenoid (SD103)
[7]	Paper surface detect sensor/2 (PS104)	[8]	Paper weight lever sensor (PS103)
[9]	Paper surface detect lever	[10]	Paper surface detect solenoid (SD101)

9.2 Drive

9.2.1 Drive outline

- The driving source of the receiving section is the tray lift-up motor, paper surface detect solenoid, and paper exit motor. The following parts are driven.

Section	Driving source	Driving parts	Function
Tray lift up section	Tray lift up motor	Paper exit tray	The exit tray will be moved up/down according to the discharged paper load.
Paper level detect section	Paper surface detect solenoid	Paper surface detect lever	• The paper surface level detect lever is moved up/down to detect the paper load discharged to the exit tray. • For consecutive printing, the rear edge of the paper discharged to the exit tray will be held by the paper surface level detect lever. It prevents the discharged paper from being misaligned by the paper that follows.
Paper exit section	Paper exit motor	Paper roller/lower	The paper is discharged to the exit tray.
		Paper exit paddle	It rotates so that the rear edge of the paper which passed through the exit roller/lower will be held to be discharged to the exit tray/upper without fail.

9.2.2 Tray lift-up section

- The drive source is the tray lift-up motor which moves the exit tray up/down.

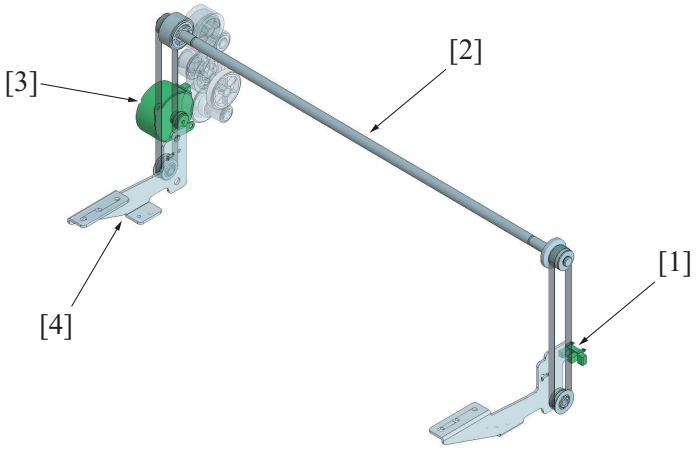

[1]	Paper exit tray home sensor (PS107)	[2]	Shaft
[3]	Tray lift up motor (M109)	[4]	Tray lifter

9.2.3 Paper level detect section

- The paper surface detect solenoid drives the paper surface level detect lever.
- The paper surface detect solenoid turns on to rotate the paper surface level detect lever downward.
- The paper surface detect solenoid turns off to allow the paper surface level detect lever to return to the upward position via spring force.

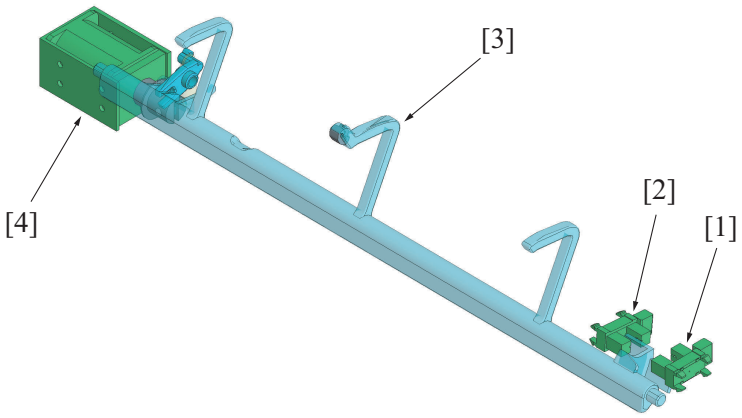

[1]	Paper surface detect sensor/2 (PS104)	[2]	Paper weight lever sensor (PS103)
[3]	Paper surface detect lever	[4]	Paper surface detect solenoid (SD101)

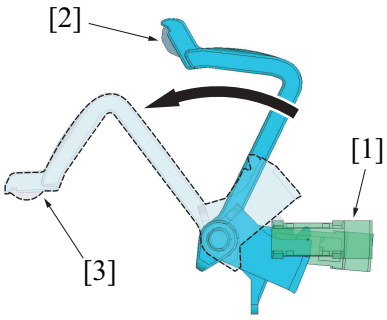

[1]	Paper surface detect sensor	[2]	Paper surface detect lever (upper position: when solenoid is turned OFF)
[3]	Paper surface detect lever (lower position: when solenoid is turned ON)	-	-

9.2.4 Paper exit roller section

- The paper exit motor drives the paper exit roller/lower.
  For details of the paper exit roller/lower, see "PF.6.2.2 Paper conveyance/receiving roller section drive" and "PF.6.3.4.(1) Paper exit roller/lower drive connecting process".
- The paper exit paddle (4 points) on the drive shaft at the paper exit roller/lower, also rotates with the paper exit roller/lower.

(1) Overall view

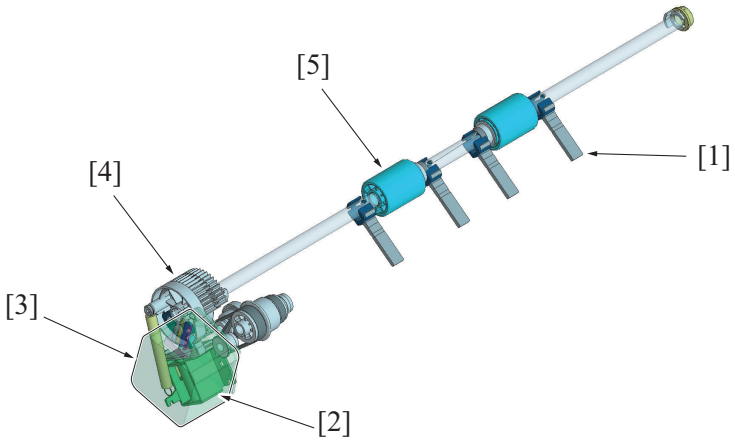

[1]	Paper exit paddle	[2]	Paper exit roller solenoid (SD103)
[3]	Paper exit motor (M102)	[4]	Paper exit roller/lower drive gear
[5]	Paper exit roller/lower	-	-

(2) Paper press down paddle front view

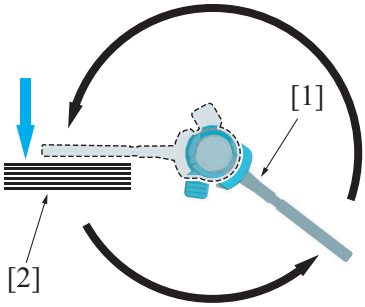

[1]	Paper exit paddle (home position)	[2]	Paper on the exit tray

9.3 Operation

9.3.1 Paper exit paddle control

- There are paper exit paddles (4 points) installed on the exit roller/lower shaft. It rotates so that the paper exit paddle holds the rear edge of the paper when the paper passes through the paper exit roller/lower, and to discharge the paper to the exit tray without fail.

(1) Paper discharge process

1. When the last paper is aligned, the paper exit roller/upper moves down to hold all the paper on the alignment tray with the paper exit roller/lower and to discharge the paper to the exit tray with paper exit roller/upper, paper exit roller/lower and the alignment roller.

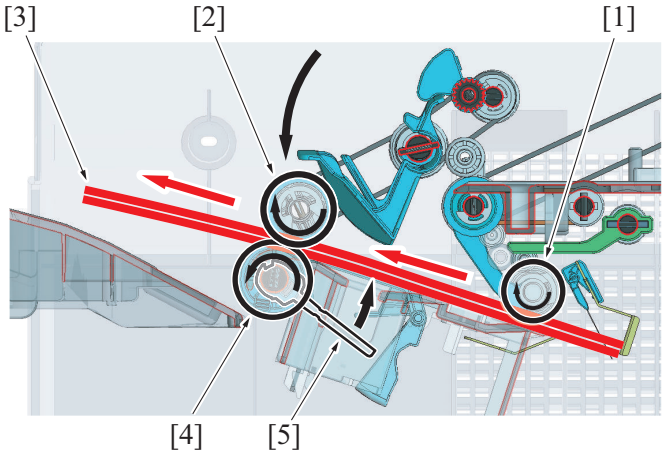

[1]	Alignment roller	[2]	Paper exit roller/upper
[3]	Paper	[4]	Paper exit roller/lowper
[5]	Paper exit paddle	-	-

2. The paper exit paddle pushes out the rear edge of the paper which passed through the exit roller/lower to press the paper over the exit tray.

NOTE

- **The paper exit paddle is installed on the exit roller/lower shaft. It rotates one revolution and stops as the exit roller/lower does.**
  For details of the paper exit roller/lower operation mechanism, see "PF.6.3.4.(1) Paper exit roller/lower drive connecting process".

3. The paper exit paddle presses the paper and returns to the home position.

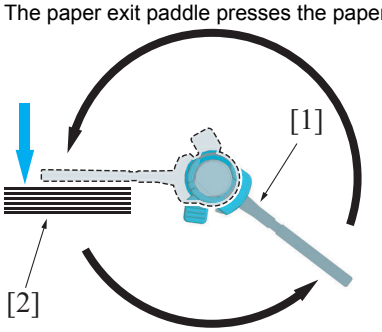

[1]	Paper paddle (home position)	[2]	Paper on the exit tray

NOTE

- **The paper exit paddle is made from soft rubber. It curves after discharging the paper to the exit tray to return to the home position inside the machine.**

4. After the paper exit paddle is retracted, the paper surface detect lever rotates to press the rear edge of the discharged paper.

For details of the paper surface detect lever operation mechanism, see "PF.9.3.3 Paper level detect control"

9.3.2 Paper exit tray lift-up control

- The up/down motion of the exit tray is conducted by the tray lift-up motor.
- When the tray lift-up motor rotates forward, the tray drive belt rotates forward through the gear to lift up the exit tray.
- When the tray lift up motor rotates in a reverse direction, the tray drive belt rotates in a reverse direction through the gear to lower the exit tray.
- The home position of the tray is detected by the tray home-position sensor.
- The height of the tray is detected by the paper level detect mechanism. When a job is commanded, the paper surface detect lever operates to move the exit tray up/down according to the detected result.
  For details of the control, see "PF.9.3.3 Paper level detect control".

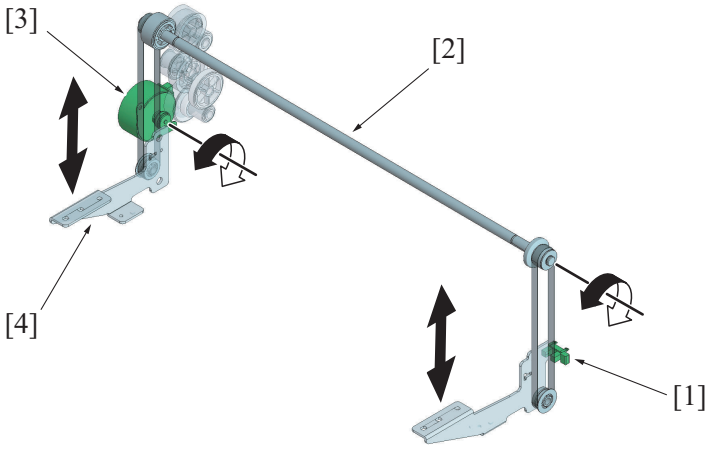

[1]	Paper exit tray home sensor (PS107)	[2]	Shaft
[3]	Tray lift up motor (M109)	[4]	Tray lifter

9.3.3 Paper level detect control

- The paper level is detected by the paper weight lever sensor and paper surface detect sensor/2. The height of the exit tray is controlled according to the detected result.
- The paper surface detect actuator rotates when the paper surface detect solenoid turns on, to hold the rear top face of the paper on the exit tray. The rotation value of the paper surface detect lever changes at this point, according to the paper load and the height of the exit tray.
- The paper weight lever sensor and paper surface detect sensor/2 are installed at different heights. (Paper weight lever sensor: high, paper surface detect sensor/2: low) The paper surface detect lever has two light shield plates with different lengths, which provides different detection result for each sensor with the rotation value found by the paper surface detect lever. The current paper level is judged according to the result so that the exit tray will be controlled to move up/down to the suitable height.
- The paper level is detected every time the paper is discharged to monitor the paper height. For consecutive printing, it also prevents discharged paper from being misaligned by the following paper being discharged.
- When the paper exit tray home sensor detects the exit tray while the exit tray is moving down, the exit tray is judged to be full and the warning message will be displayed on the operation panel, informing that the exit tray is full.
- The paper surface detect lever moves down when the paper is removed from the exit tray. When the lever moves down, the paper is detected to be removed, and the exit tray full display will be released.

Paper level detect table

Paper surface detect sensor/2	Paper weight lever sensor	Paper level	Exit tray lift up control
Unblocked	Blocked	High	• The exit tray is at the higher position than the reference position. The tray lift up motor will be rotated in reverse direction and move the tray down to the reference position. • When the paper exit tray home sensor detects the exit tray while the exit tray is moving down, the exit tray is judged to be full, and the following printing job will be prohibited.
Blocked	Blocked		
Blocked	Unblocked	Reference position	• Reference position. The exit tray will not move up/down.
Unblocked	Unblocked	Low	• The exit tray is at the lower position than the reference position. The tray lift up motor will rotate to move the exit tray up to the reference position.

(1) Perspective view

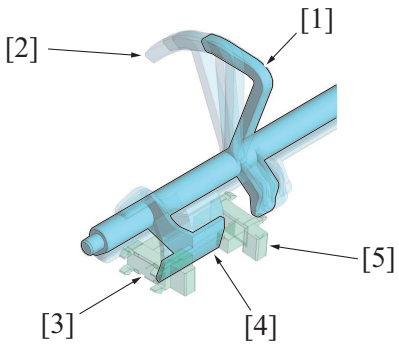

[1]	Paper surface detect lever (Paper level: home position)	[2]	Paper surface detect lever (Paper level: low)
[3]	Paper surface detect sensor/2 (PS104) (Unblocked)	[4]	Light shield plate
[5]	Paper weight lever sensor (PS103) (Blocked)	-	-

(2) Front view

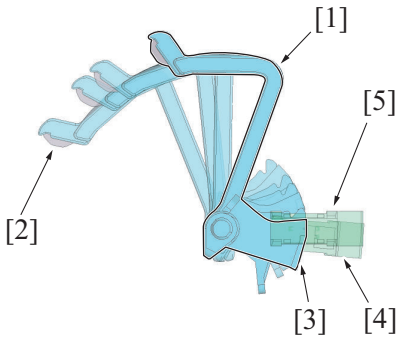

[1]	Paper surface detect lever (Paper level: home position)	[2]	Paper surface detect lever (Paper level: low)
[3]	Light shield plate	[4]	Paper surface detect sensor/2 (PS104) (Blocked)
[5]	Paper weight lever sensor (PS103) (Unblocked)	-	-

(3) Amount of paper stacking at the exit tray

- For details of the amount of paper stacking at the exit tray, see “C PRODUCT SPECIFICATIONS/FS-533”.
  C.7.3 Paper process ability

PG THEORY OF OPERATION FS-534/PK-520/SD-511

1. FINISHER OUTLINE

- "Sort function, Sort offset function", "Group function, Group offset function", "Staple function", Sort staple function", "Large capacity receiving function" and other functions can be added by installing the staple finisher FS-534 to the main body (bizhub C364e/C284e/C224e).
- The "Punch function" can be added by installing the optional function (Punch Kit PK-520).
- The "Saddle stitching function, Tri-folding function" can be added by installing the optional function (Saddle Stitcher SD-511).

Option	Summary of the additional functions
PK-520	Punch function
SD-511	Folding function, Saddle stitching function, Tri-folding function

NOTICE

- SYSTEM CONFIGURATION
- FS-534 PRODUCT SPECIFICATIONS
- PK-520 PRODUCT SPECIFICATIONS
- SD-511 PRODUCT SPECIFICATIONS

2. PAPER PATH

2.1 Sub Tray

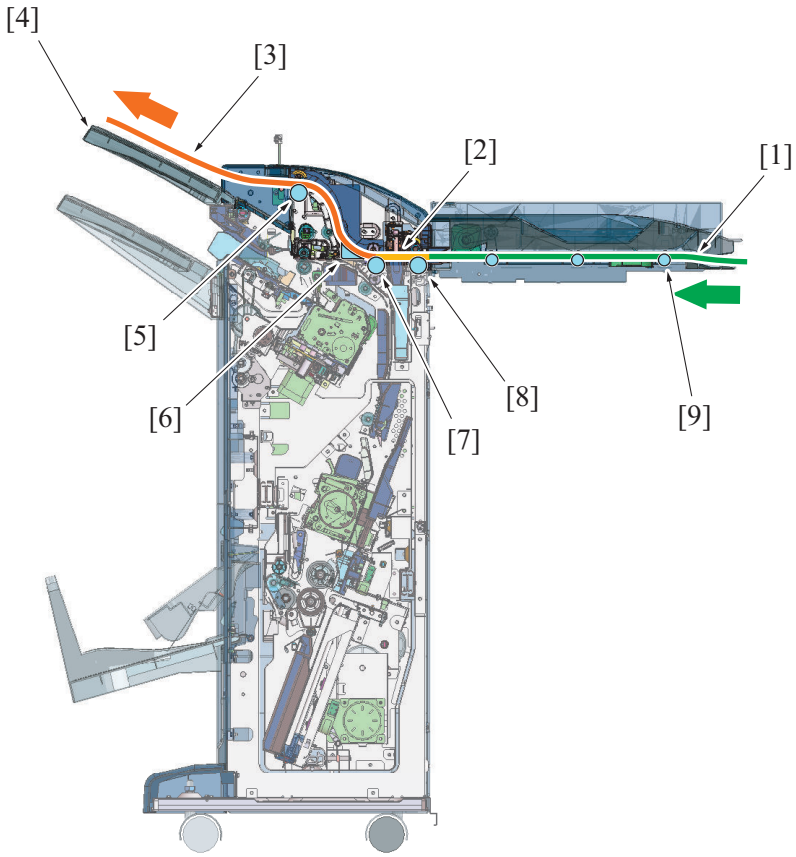

[1]	Paper feed (Paper path from the exit section of main body)	[2]	Punching holes
[3]	Paper exit	[4]	Sub tray
[5]	Sub tray section exit roller	[6]	Paper path switching gate (lower position)
[7]	FNS section transport roller	[8]	FNS section paper feed roller
[9]	RU section horizontal transport roller	-	-

2.2 Main tray

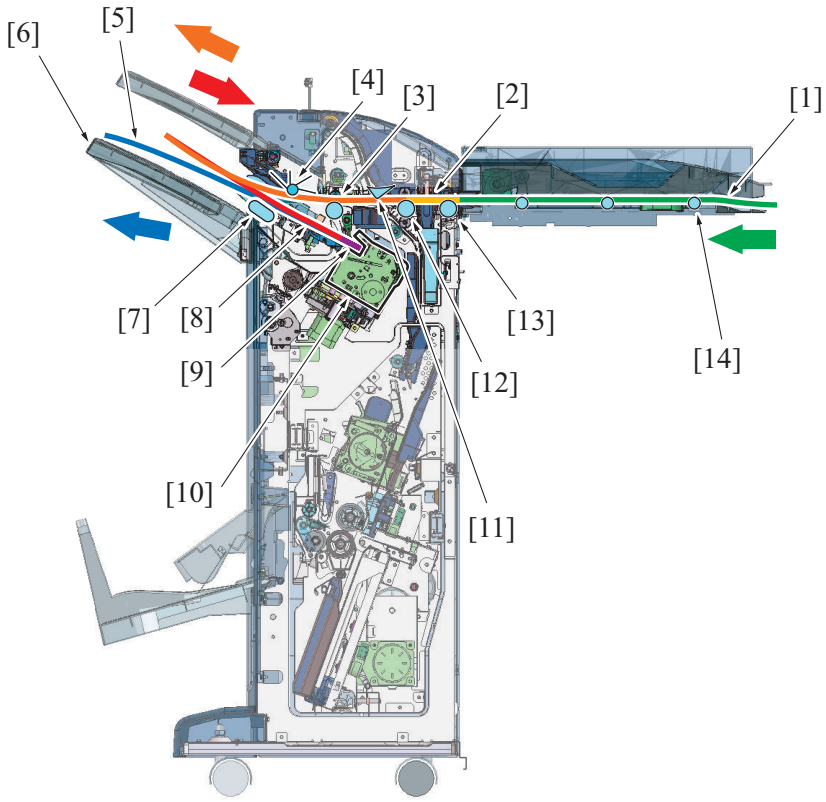

[1]	Paper feed (Paper path from the exit section of main body)	[2]	Punching holes
[3]	Paper transport	[4]	Exit section upper paddle
[5]	Paper exit	[6]	Main tray
[7]	Exit section lower paddle	[8]	Paper alignment
[9]	Staple (Staple mode)	[10]	Stapler
[11]	Paper path switching gate (upper position)	[12]	FNS section transport roller
[13]	FNS section paper feed roller	[14]	RU section horizontal transport roller

2.3 Saddle tray

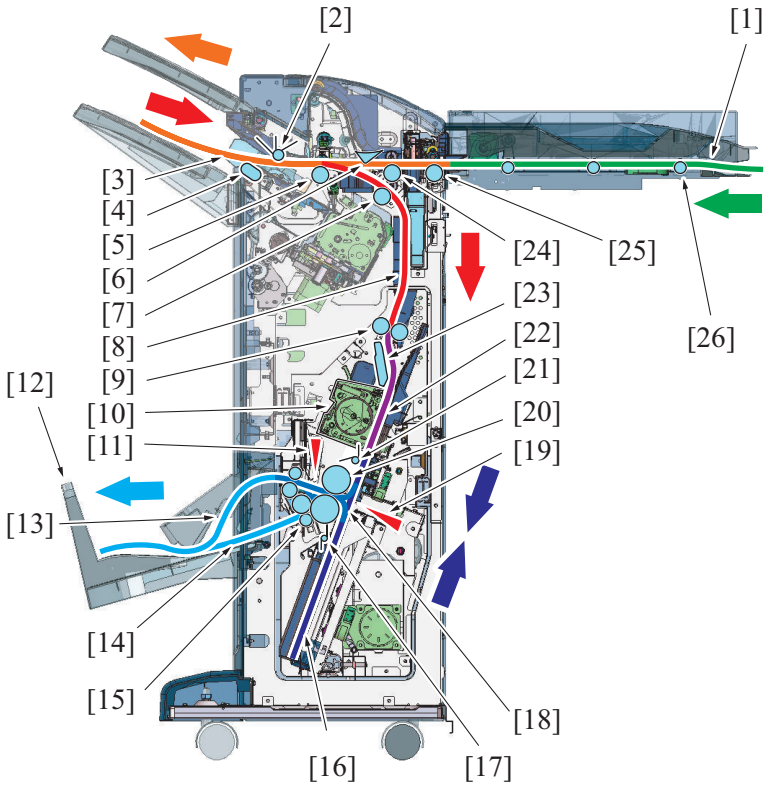

[1]	Paper feed (Paper path from the exit section of main body)	[2]	Exit section upper paddle

[3]	Paper transport (switchback)	[4]	Exit section lower paddle
[5]	Receiving roller	[6]	Paper path switching gate (upper position)
[7]	FNS section exit roller	[8]	Paper vertical transport
[9]	Saddle section paper feed roller	[10]	Center stapler: Saddle stitcher
[11]	Tri-folding knife	[12]	Saddle tray: Saddle stitcher
[13]	Paper batch exit (Center staple mode): Saddle stitcher	[14]	Paper batch exit (Tri-folding mode): Saddle stitcher
[15]	Tri-folding roller: Saddle stitcher	[16]	Paper alignment (FD): Saddle stitcher
[17]	Center folding section lower paddle	[18]	Paper fold (Center folding, Tri-folding): Saddle stitcher
[19]	Center folding knife: Saddle stitcher	[20]	Center folding roller: Saddle stitcher
[21]	Center folding section upper paddle	[22]	Paper alignment (CD), Center staple: Saddle stitcher
[23]	Curl cover	[24]	FNS section transport roller
[25]	FNS section paper feed roller	[26]	RU section horizontal transport roller

2.4 3rd tray

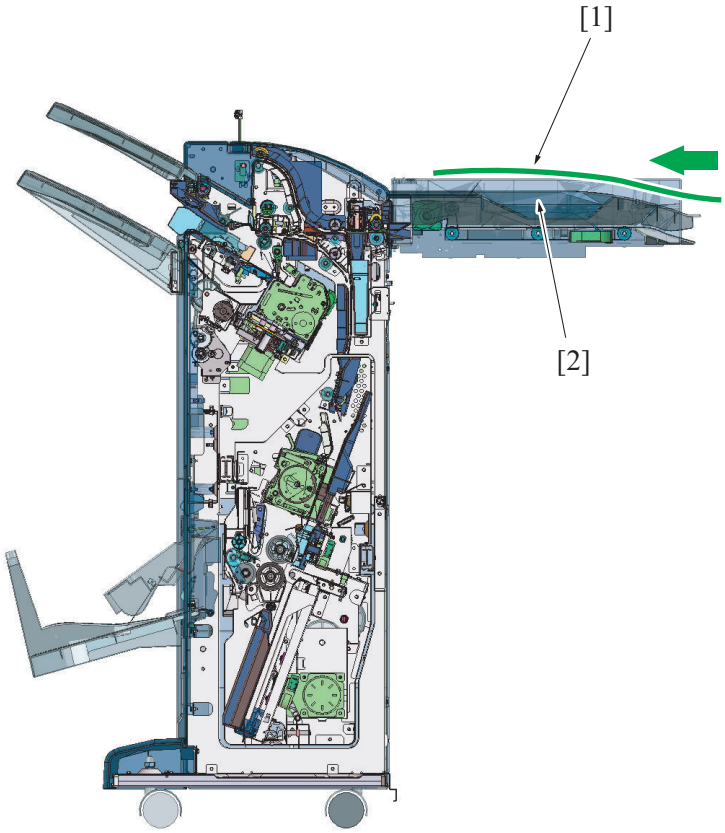

[1]	Paper exit	[2]	RU section

3. CONFIGURATION

3.1 Section configuration

- The staple finisher FS-534 has the finisher body fixed on the left side of the main body. The RU section doors can be opened and closed for maintenance and other operation. It is not configured in the way that the finisher can be detached from the main body by sliding it off.
- The staple finisher has the sort out configuration and the staple configuration as standard. Also, optional punch kit PK-520 and the saddle stitcher SD-511 can be added inside the unit. For maintenance and other operations of the saddle stitcher, slide the saddle stitcher out from the finisher to the front side to conduct operation.

FS-534



Front door inner section of the FS-534

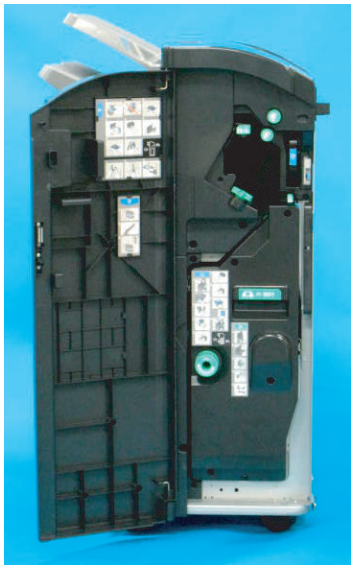

RU section (horizontal transport section)



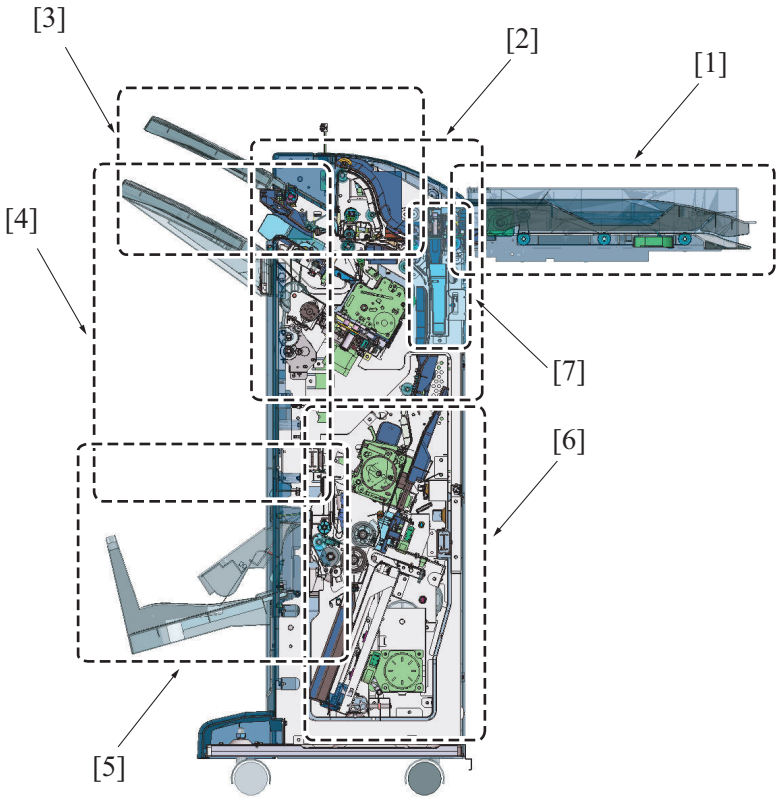

[1]	RU section (horizontal transport section)	[2]	FNS section (finisher section)
[3]	Exit section (sub tray)	[4]	Exit section (main tray)
[5]	Saddle tray section (only when the saddle stitcher SD-511 is mounted)	[6]	Saddle section (only when the saddle stitcher SD-511 is mounted)
[7]	Punch section (only when the punch kit PK-520 is mounted)	-	-

3.2 Main electrical part configuration

3.2.1 Control board, motor

(1) RU section, Punch section, FNS section

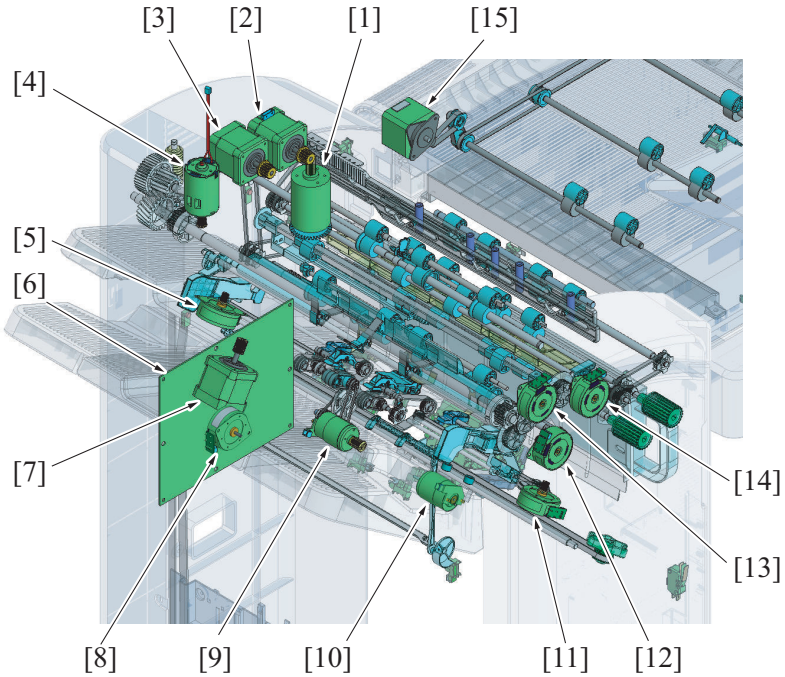

[1]	Punch drive motor (M1): Punch kit	[2]	FNS entry transport motor (M2)
[3]	FNS discharge motor (M3)	[4]	Main tray up/down motor (M11)
[5]	Alignment motor/Rear (M8)	[6]	FS control board (FSCB)
[7]	Side stapler movement motor (M13)	[8]	Paper receiving control motor (M12)

[9]	Pre-eject drive motor (M9)	[10]	Bundle eject motor (M10)
[11]	Alignment motor/Front (M7)	[12]	Trailing edge stopper motor (M6)
[13]	FNS paddle motor (M5)	[14]	Receiving roller retraction motor (M4)
[15]	RU transport motor (M1)	-	-

(2) Saddle section

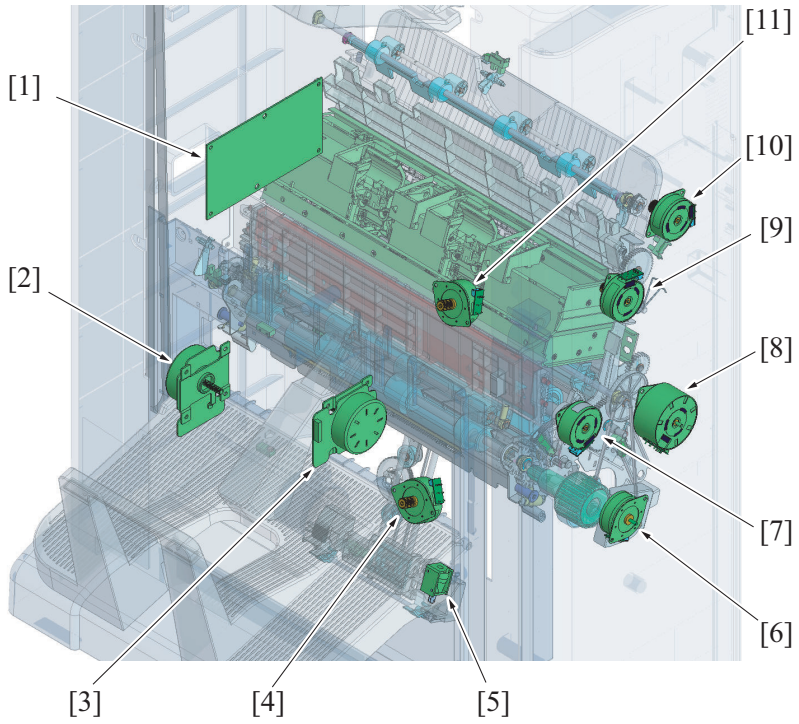

[1]	SD drive board (SDDB)	[2]	Center fold roller motor (M5)
[3]	Center fold knife motor (M9)	[4]	Stopper drive motor (M4)
[5]	Stopper solenoid (SD1)	[6]	SD paddle motor (M7)
[7]	Tri-folding guide motor (M6)	[8]	Center fold guide motor (M8)
[9]	Paper discharge control motor (M2)	[10]	SD transport motor (M1)
[11]	Alignment motor (M3)	-	-

3.2.2 Sensor

(1) FNS section

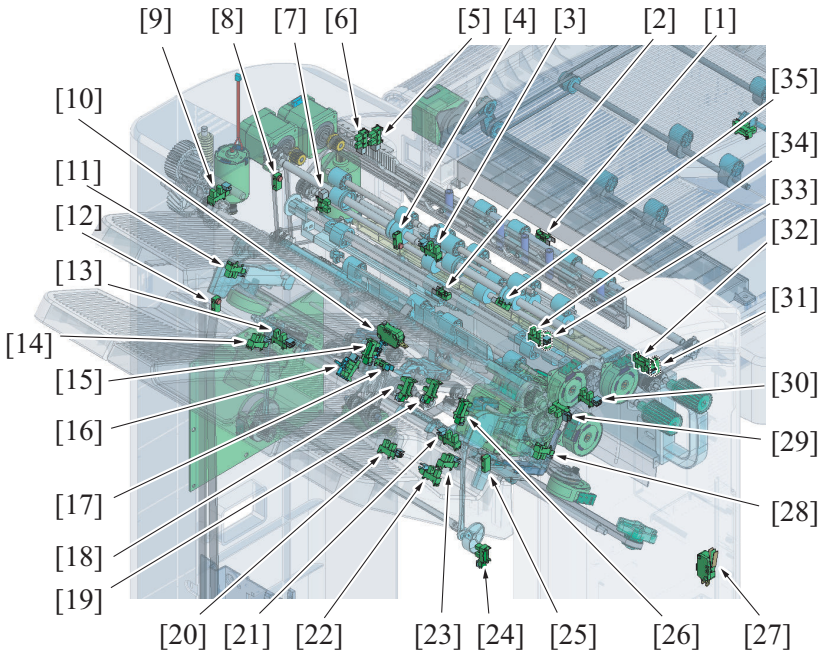

[1]	FNS entrance sensor (PS4)	[2]	Main tray exit sensor (PS16)
[3]	Sub tray exit sensor (PS8)	[4]	Punch dust full sensor/in (PS5): Punch kit

[5]	Punch home sensor (PS1): Punch kit	[6]	Punch position sensor (PS2): Punch kit
[7]	Punch motor sensor (PS3): Punch kit	[8]	Sub tray full detection sensor/out (PS9)
[9]	Stacker motor sensor (PS25)	[10]	Main tray upper position detect switch (SW2)
[11]	Alignment plate/R home sensor (PS13)	[12]	Main tray upper sensor/out (PS6)
[13]	Main tray upper position sensor/R (PS26)	[14]	Stapler home position sensor (Rear) (PS23)
[15]	Gripper position detection sensor (PS19)	[16]	Gripper home position sensor (PS18)
[17]	Staple stacker paper detection sensor (PS31)	[18]	Pre-eject away sensor (PS22)
[19]	Pre-eject home sensor (PS21)	[20]	Pre-eject encorder sensor (PS15)
[21]	Main tray upper position sensor/F (PS27)	[22]	Gripper motor sensor (PS17)
[23]	Stapler position sensor (Center) (PS24)	[24]	Paper delivery control sensor (PS28)
[25]	Main tray upper sensor (PS7)	[26]	Trailing edge stopper home position detection sensor (PS20)
[27]	Front door open detect switch (SW1)	[28]	Alignment plate/F home sensor (PS12)
[29]	Upper paddle homeposition detection sensor (PS14)	[30]	Receiving roller retraction sensor (PS11)
[31]	Punch dust full sensor/out (PS4): Punch kit	[32]	Exchange folded paper output sensor(PS30)
[33]	Sub tray full detection sensor/in (PS10)	[34]	Upper cover open/close detection sensor (PS32)
[35]	Saddle exit sensor (PS5)	-	-

(2) RU section (horizontal transport section)

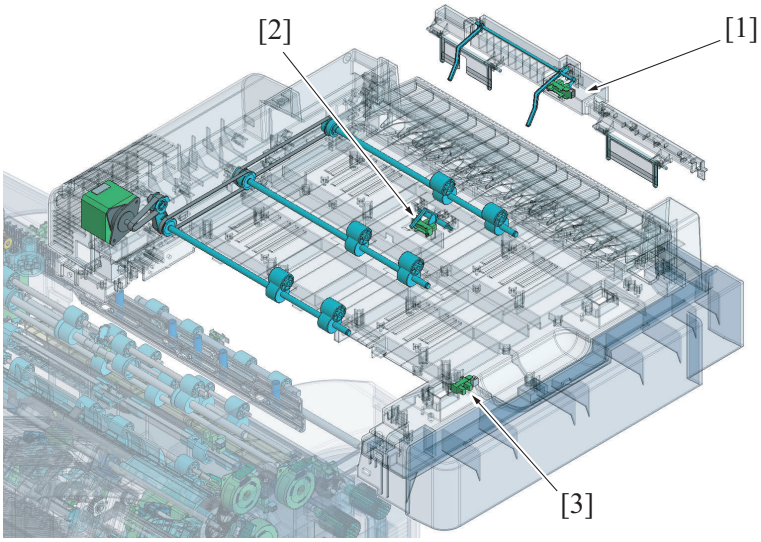

[1]	3rd exit tray full sensor (PS1)*	[2]	RU entrance sensor (PS2)
[3]	RU cover open/close detection sensor (PS3)	-	-

- *: For bizhub C754/754/C654/654, there is no need to install these parts.

(3) Saddle section

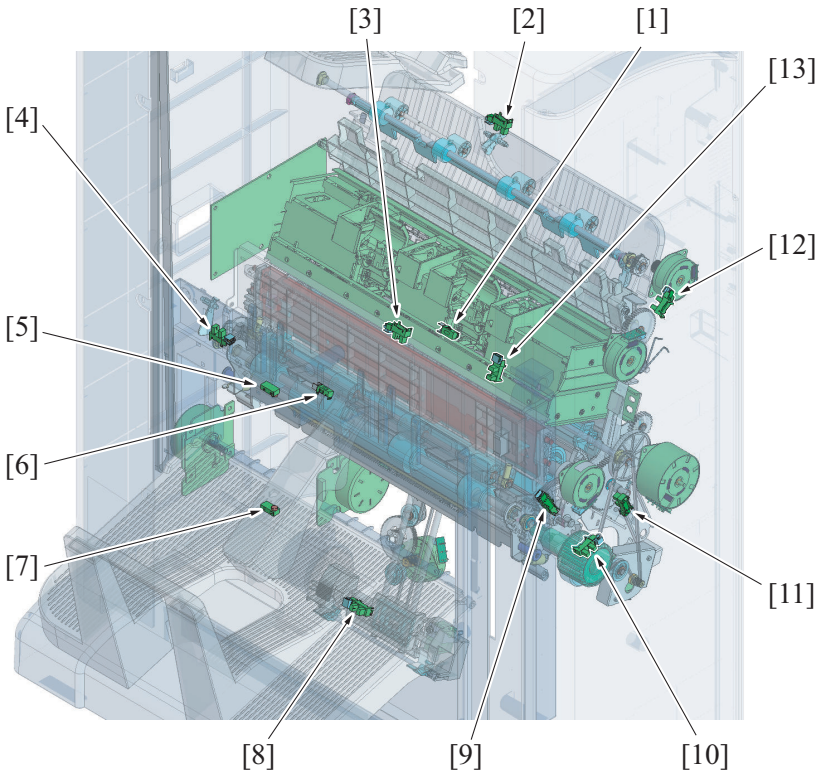

[1]	Center staple/fold stacker paper detect sensor (PS3)	[2]	SD entrance sensor (PS1)
[3]	Center fold knife home sensor (PS8)	[4]	Main tray full detection sensor (PS29) * : finisher
[5]	Booklet tray empty detection sensor/in (PS13)	[6]	Fold exit sensor (PS12)
[7]	Booklet tray empty detection sensor/out (PS14)	[8]	Stopper home sensor (PS6)
[9]	Tri-folding gate home sensor (PS11)	[10]	Paddle home sensor (PS5)
[11]	Guide home sensor (PS7)	[12]	Curl cover detection sensor (PS2)
[13]	Alignment home sensor (PS4)	-	-

- *: The installation position of the main tray full detection sensor differs depending on whether or not the saddle stitcher is mounted. (The capacity of the main tray is 3,000 when the saddle stitcher is not mounted. The capacity of the receiving is 2,000 when the saddle stitcher is mounted.) The figure above shows the position of the sensor when the saddle stitcher is mounted.

3.3 Main mechanical part configuration

3.3.1 Overall configuration

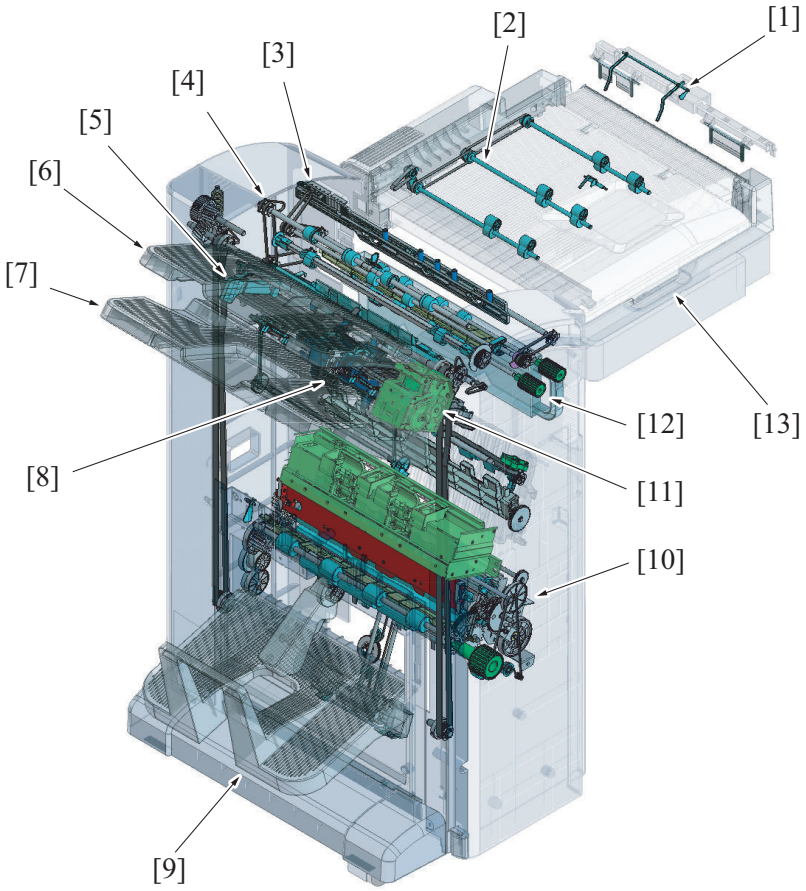

[1]	Exit tray full detection mechanism (when exit section of the main body is mounted)	[2]	RU section horizontal transport roller
[3]	Punch section: Punch kit PK-520	[4]	Paper feed/transport section
[5]	Alignment section	[6]	Sub tray
[7]	Main tray	[8]	Exit section
[9]	Saddle tray	[10]	Center staple section: Saddle stitcher SD-511
[11]	Staple section	[12]	Punch dust box: Punch kit PK-520
[13]	RU section (horizontal transport section)*	-	-

- *: Illustrations with special parts for bizhub C364e/C364/C284e/C284/C224e/C224 are shown.

3.3.2 RU section (horizontal transport section)

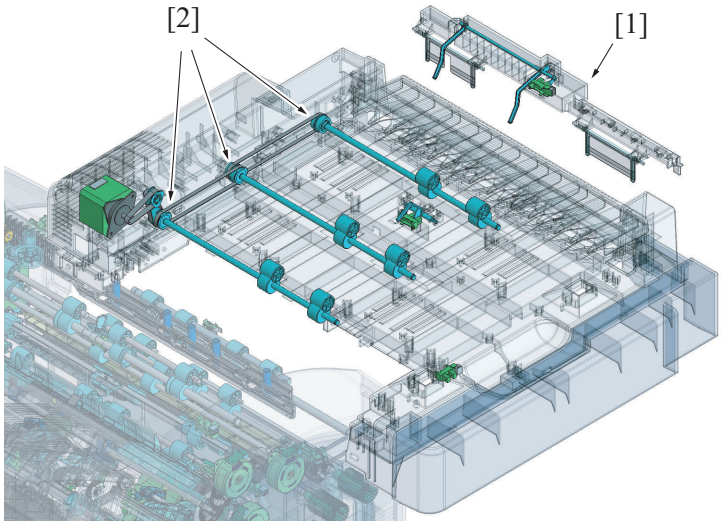

[1]	3rd exit tray full sensor actuator*	[2]	RU section horizontal transport roller

- *: For bizhub C754/754/C654/654, there is no need to install these parts.

3.3.3 Paper feed/transport section, Alignment section, tray section

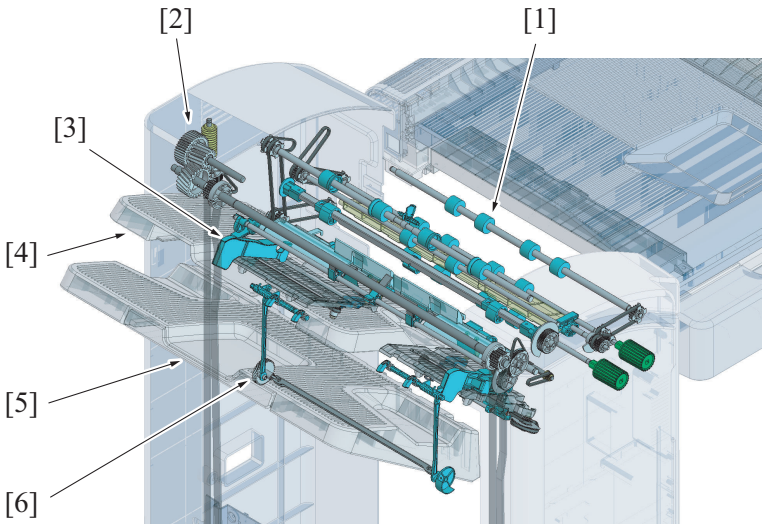

[1]	Paper feed/transport section	[2]	Main tray up/down section
[3]	Alignment section	[4]	Sub tray
[5]	Main tray	[6]	Main tray paper surface detection mechanism

3.3.4 Punch section, staple section, exit section

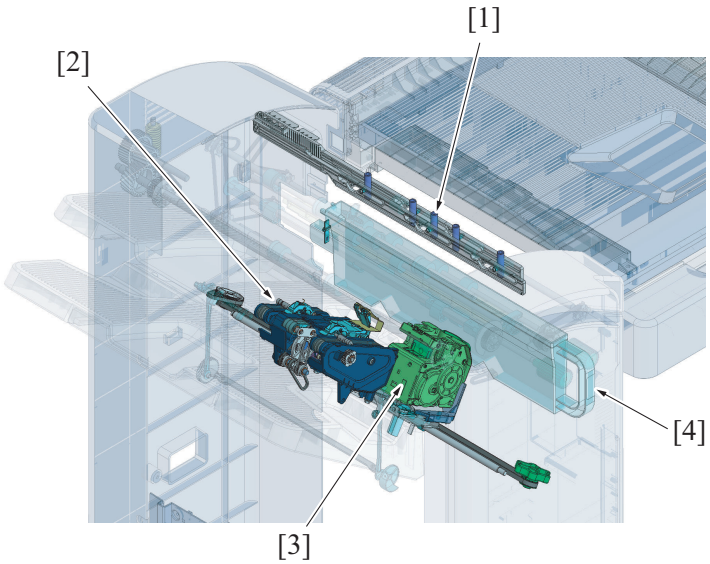

[1]	Punch section: Punch kit PK-520	[2]	Exit section
[3]	Staple section	[4]	Punch dust box: Punch kit PK-520

3.3.5 Saddle section 1

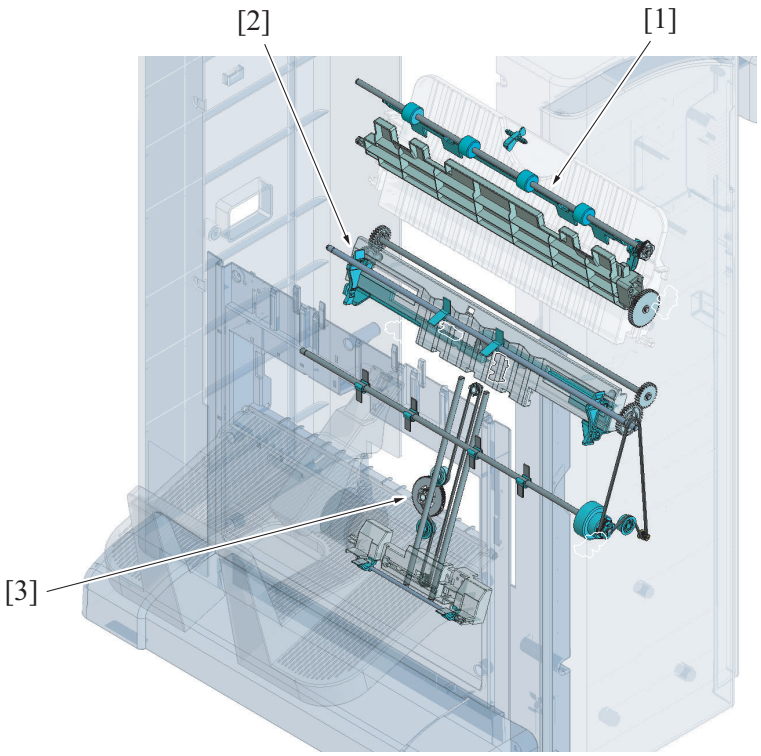

[1]	Saddle stitcher paper feed section: Saddle stitcher SD-511	[2]	Center folding stacker CD alignment section: Saddle stitcher SD-511
[3]	Center folding stacker FD alignment section: Saddle stitcher SD-511	-	-

3.3.6 Saddle section 2

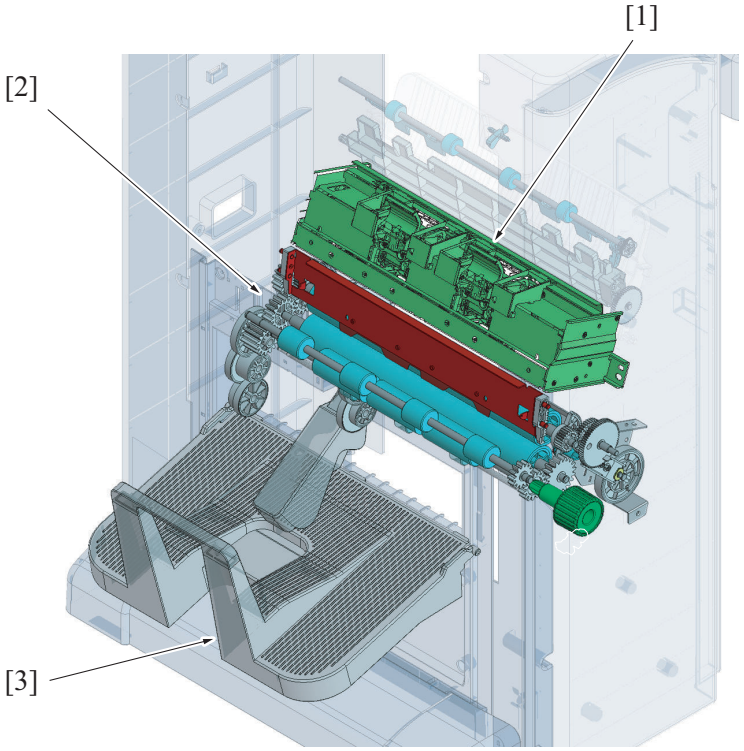

[1]	Center staple unit: Saddle stitcher SD-511	[2]	Folding section (center folding section/ Tri-folding section): Saddle stitcher SD-511
[3]	Saddle tray: Saddle stitcher SD-511	-	-

3.4 Main roller configuration

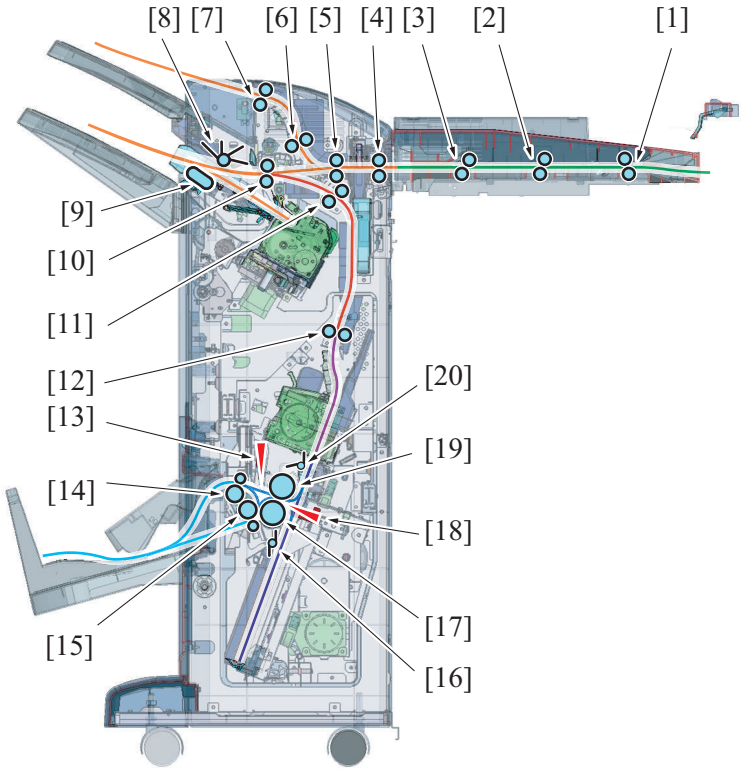

[1]	RU section horizontal transport roller/1	[2]	RU section horizontal transport roller /2
[3]	RU section paper feed roller/3	[4]	FNS section paper feed roller
[5]	FNS section transport roller	[6]	Sub tray section vertical transport roller
[7]	Sub tray section exit roller	[8]	Exit section upper paddle
[9]	Exit section lower paddle	[10]	Receiving roller
[11]	FNS section exit roller	[12]	Saddle section paper feed roller
[13]	Tri-folding knife	[14]	Saddle section exit roller
[15]	Tri-folding roller	[16]	Center folding section lower paddle
[17]	Center folding roller/2	[18]	Center folding knife
[19]	Center folding roller/1	[20]	Center folding section upper paddle

4. FNS SECTION

4.1 Front door open/close detection mechanism

- The front door open detect switch installed at the front right of the FNS section detects open/close of the finisher's front door.
- Opening the front door, displays the warning screen on the control panel. All the setting operations and jobs are disabled while the warning screen is displayed. The printing job is interrupted, and the paper being transported causes paper jam. The warning screen can be cancelled by closing the door.

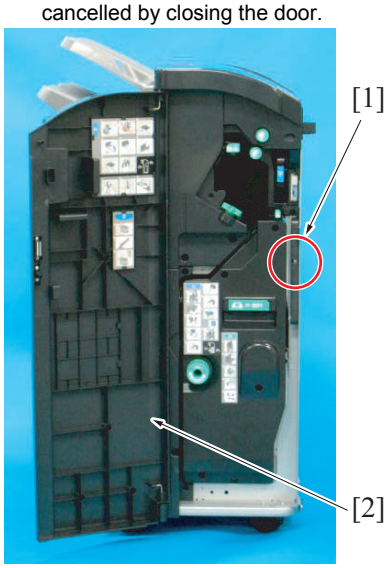

[1]	Front door open detect switch (SW1)	[2]	Front door

Warning screen

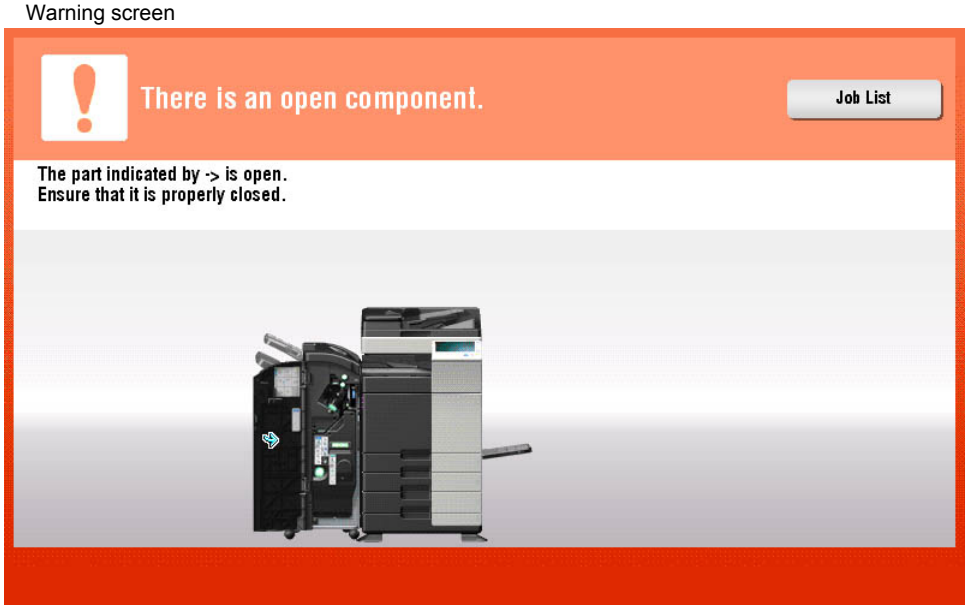

5. RU SECTION (HORIZONTAL TRANSPORT SECTION)

5.1 Configuration

- The RU section (horizontal transport section) transfers paper fed out from the exit section of main body to the paper feed section of optional finisher.
- The RU door is installed at the upper part of the RU section. Access to the horizontal transportation roller is enabled by opening the door upward. It is used for periodical cleaning of the roller and dealing with the paper jam at the RU section and other necessary operations.

NOTE

- **The "3rd exit tray full sensor (sensor unit)" does not need to be installed on the MFP body's exit part since the 3rd tray is not used for bizhub C754/754/C654/654.**

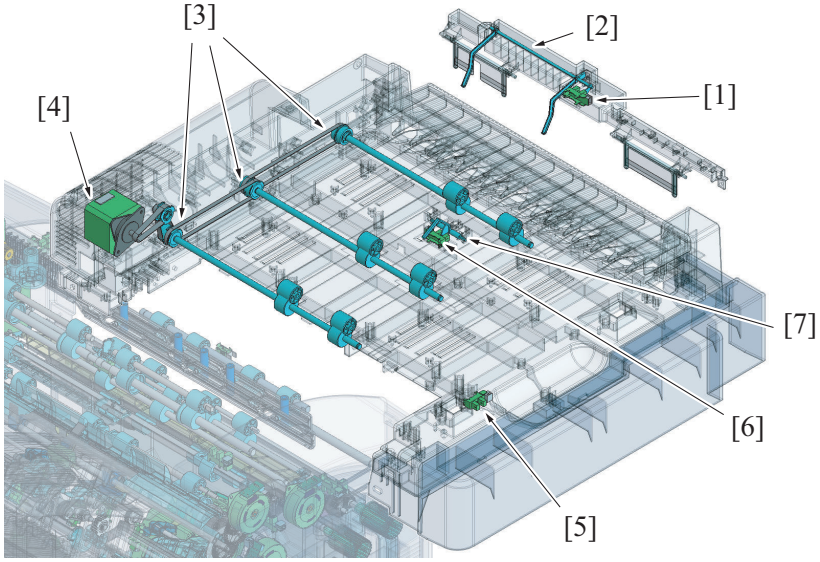

[1]	3rd exit tray full sensor (PS1):Exit section of main body *	[2]	3rd exit tray full sensor actuator: Exit section of main body *
[3]	RU section horizontal transport roller	[4]	RU transport motor (M1)
[5]	RU cover open/close detection sensor (PS3)	[6]	RU entrance sensor (PS2)
[7]	RU entrance sensor actuator	-	-

- *: For bizhub C754/754/C654/654, there is no need to install these parts.

3rd tray on the RU section

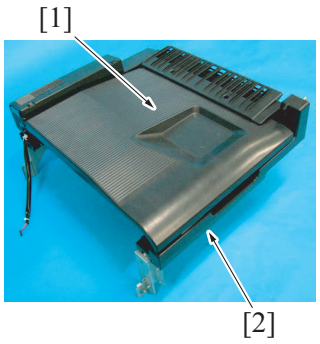

[1]	3rd tray	[2]	RU section

RU section door is opened

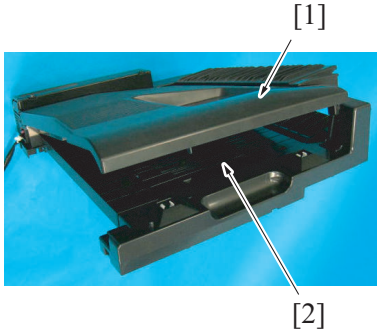

[1]	RU section door	[2]	Horizontal transport section

5.1.1 Exclusive parts

(1) Exclusive parts for bizhub C364e/C364/C284e/C284/C224e/C224

For installing the finisher FS-534 to bizhub C364e/C364/C284e/C284/C224e/C224, the sensor unit (3rd exit tray full sensor/ 3rd exit tray full sensor actuator) needs to be installed to the exit section of the main body of the MFP. For the replacing process, refer to the “INSTALLATION MANUAL”.

NOTE

- **Parts included in FS-534 should be used for installation.**
- **Special parts for bizhub C754/754/C654/654 should be saved when there is a possibility to install the finisher to other types of machines.**

Standard parts

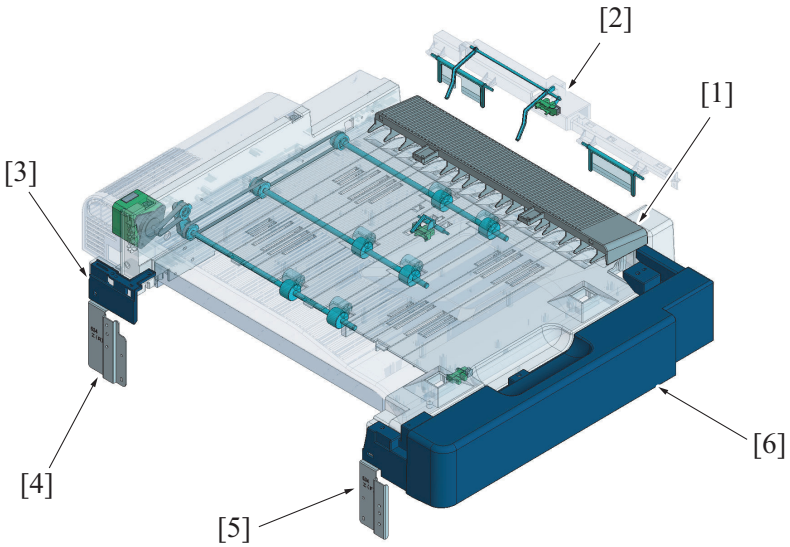

[1]	Gude plate	[2]	Sensor unit (3rd exit tray full sensor/ 3rd exit tray full sensor actuator)
[3]	Rear cover	[4]	Mounting bracket plate/Z (R)
[5]	Mounting bracket plate/Z (F)	[6]	Front cover

(2) Exclusive parts for bizhub C754/754/C654/654

For installing the finisher FS-534 to bizhub C754/754/C654/654, exclusive parts for bizhub C364e/C364/C284e/C284/C224e/C224 need to be replaced with the parts correspond to bizhub C754/754/C654/654. For the replacing process, refer to the “INSTALLATION MANUAL”.

NOTE

- **Parts included in FS-534 should be used for installation/replacing.**
- **When there is any possibility to install the finisher to the bizhub C364e/C364/C284e/C284/C224e/C224, keep the removed parts.**

Exclusive parts for bizhub C754/754/C654/654

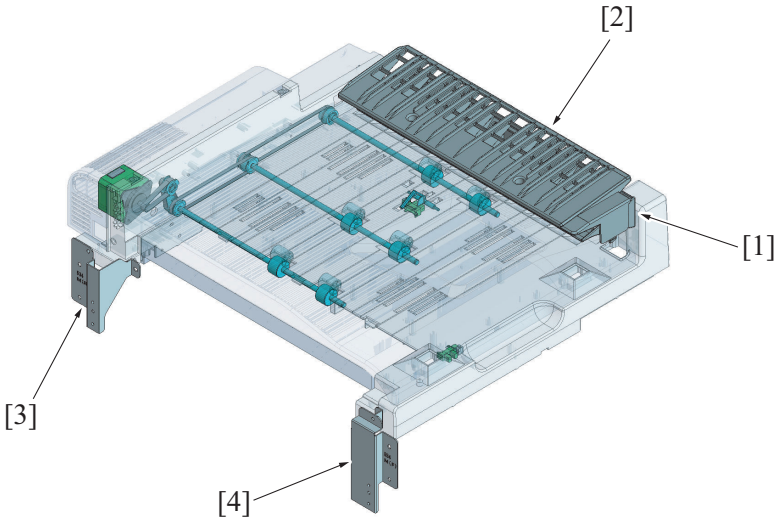

[1]	Guide plate/A	[2]	Gude plate/B
[3]	Mounting bracket/M (R)	[4]	Mounting bracket/M (F)

5.2 Drive

- The RU transport motor drives the RU section. It drives three RU section horizontal transport roller.
- The RU section horizontal transport roller is driven using the drive belt.

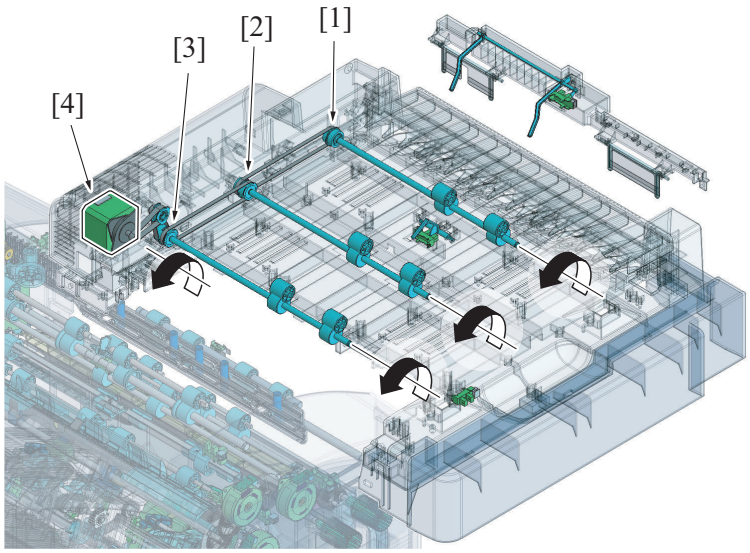

[1]	RU section horizontal transport roller/1	[2]	RU section horizontal transport roller/2
[3]	RU section horizontal transport roller/3	[4]	RU transport motor (M1)

5.3 Operation

5.3.1 Paper transport control

- It transports the paper discharged from the lower exit of the main body exit section, to the RU section using the feed guide.
- It transports the paper to the FNS section, using three RU section horizontal transport roller.
- The RU entrance sensor actuator is installed downstream of the paper path of the RU section horizontal transport roller/1, and the RU entrance sensor detects the paper transportation status.

Perspective view

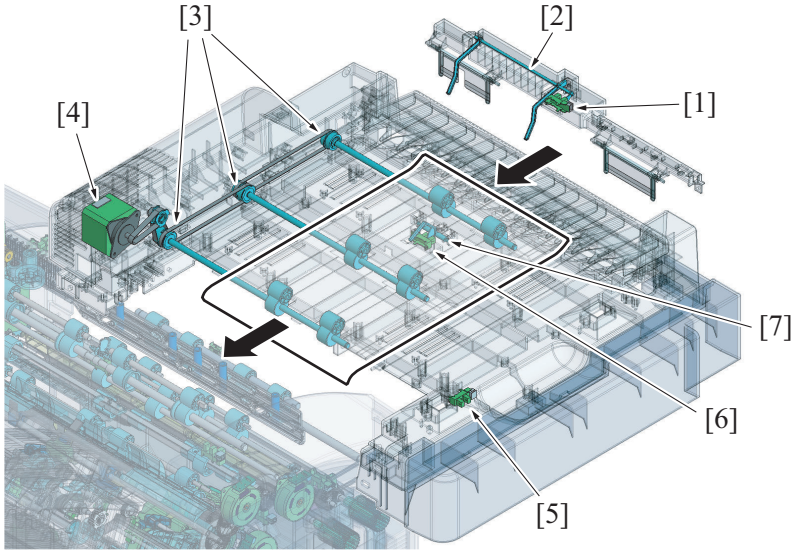

[1]	3rd exit tray full sensor (PS1)	[2]	3rd exit tray full sensor actuator
[3]	RU section horizontal transport roller	[4]	RU transport motor (M1)
[5]	RU cover open/close detection sensor (PS3)	[6]	RU entrance sensor (PS2)
[7]	RU entrance sensor actuator	-	-

Front view

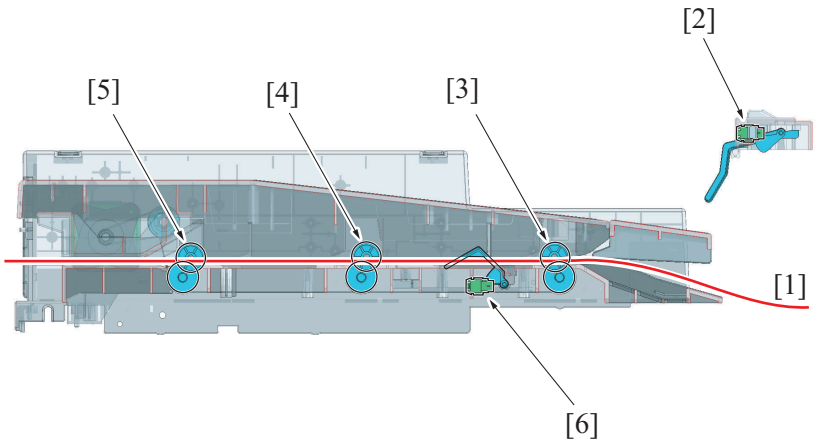

[1]	Paper	[2]	3rd exit tray full sensor (PS1)
[3]	RU section horizontal transport roller/1	[4]	RU section horizontal transport roller/2
[5]	RU section horizontal transport roller/3	[6]	RU entrance sensor (PS2)

5.3.2 RU section door open/close detection mechanism

- The RU cover open/close detection sensor installed at the front left of the RU, detects open/close of the RU door.
- Opening the RU door, displays the warning screen on the control panel. All the setting operations and jobs are disabled while the warning screen is displayed. The printing job is interrupted, and the paper being transported causes paper jam. The warning screen can be cancelled by closing the door.

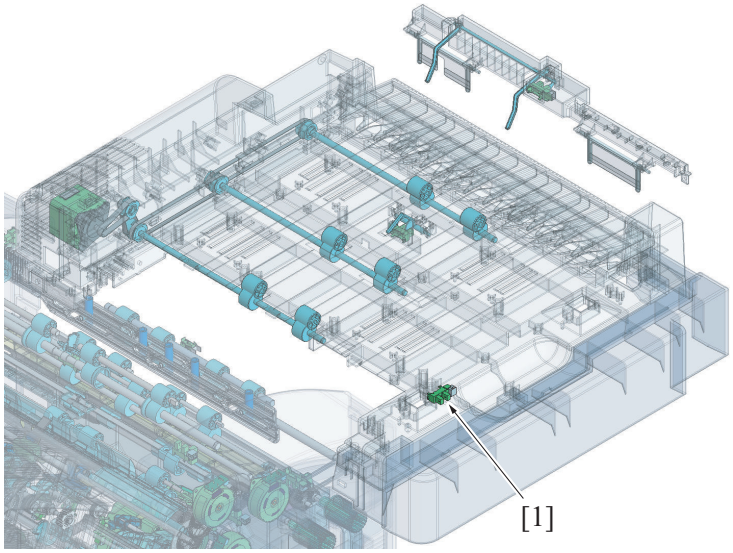

[1]	RU cover open/close detection sensor (PS3)	-	-

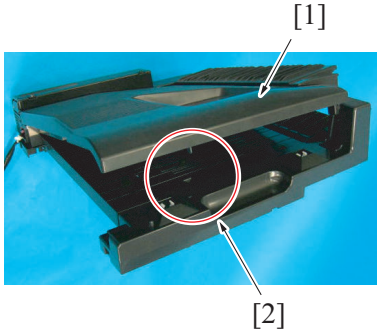

[1]	RU section door	[2]	RU cover open/close detection sensor (PS3)

Warning screen

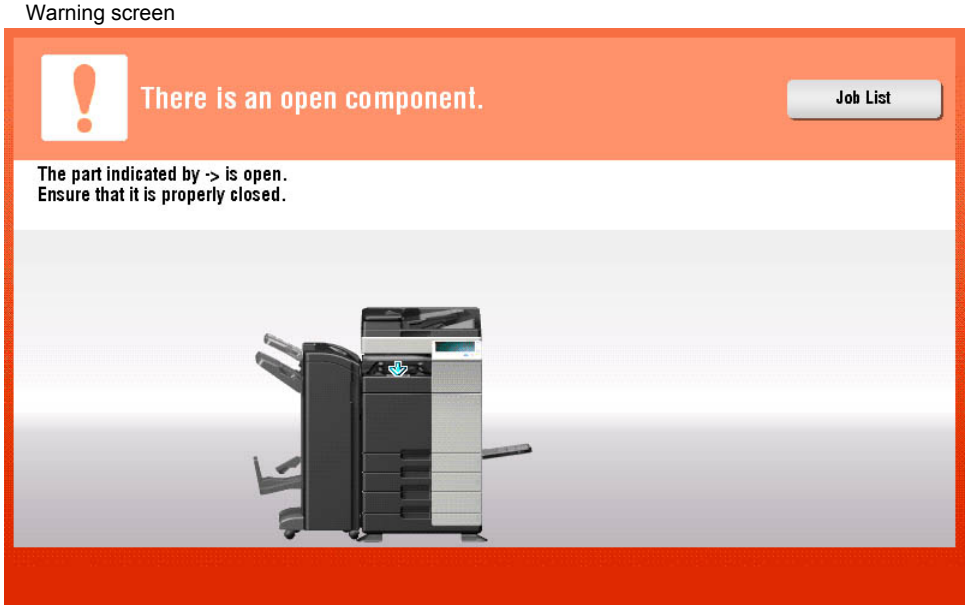

5.3.3 3rd exit tray full detection mechanism

- When a predetermined quantity of paper is discharged to the 3rd tray, the 3rd exit tray full sensor actuator will be pushed up by the discharged paper. When the actuator is pushed up to the predetermined position, the 3rd exit tray full sensor will be unblocked by the actuator to detect the exit tray full.
- The warning message will be displayed on the operation panel when the 3rd tray full is detected. All setting operations and jobs will be disabled when the warning message is displayed on the screen. The warning message will be released by removing the paper on the 3rd tray.

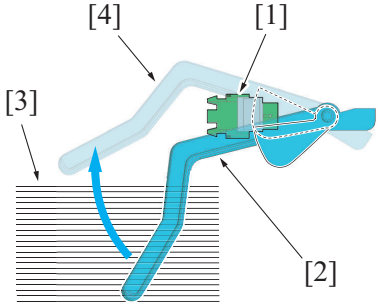

[1]	3rd exit tray full sensor (PS1)	[2]	3rd exit tray full sensor actuator (no paper)
[3]	Paper	[4]	3rd exit tray full sensor actuator (paper exit tray full)

6. PUNCH SECTION (PK-520)

6.1 Configuration

- The punch function can be added to the finishing mode by installing the optional punch kit PK-520 to the finisher FS-534.
- At the punch section, the holes are punched at the trailing edge of the paper, transported from the RU section (horizontal transport section) when the paper is fed into the FNS section (finisher section). Holes are punched sheet by sheet.
- The punch kits for North America, Europe, and other market areas have the configuration to switch the number of punch holes.
  NOTE
  - **2-hole punch kits and 4-hole punch kits do not have the function to switch the number of punch holes.**
  - **"Finishing" cannot be selected using a different punch kit. (Example: The three-hole punch mode cannot be selected when the 4-hole punch kit is installed.)**

- Punch dust generated by punching is received in the punch dust box.
- The paper with punched holes is transported to the transporting section from the punch section.
- When the punch holes are not specified at "Finishing", the paper is transported to the transportation section from the FNS paper feed section without punching holes.

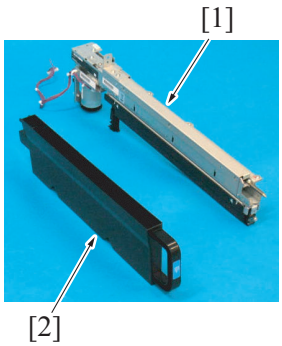

[1]	Punch unit	[2]	Punch dust box

Front view

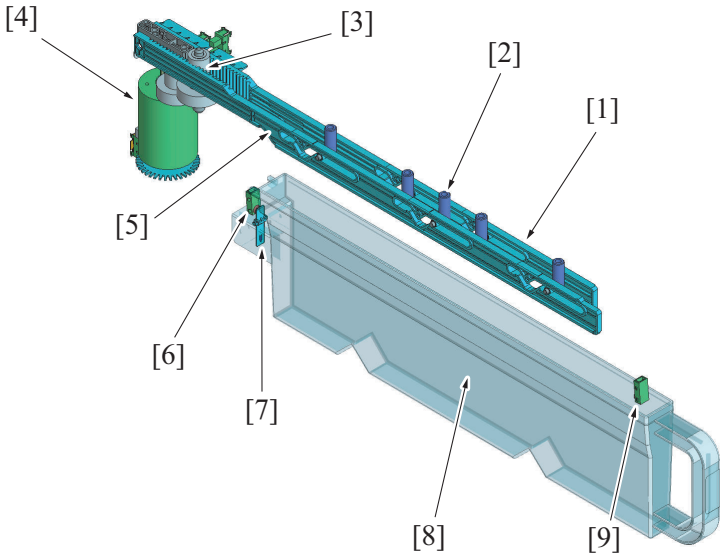

Rear view

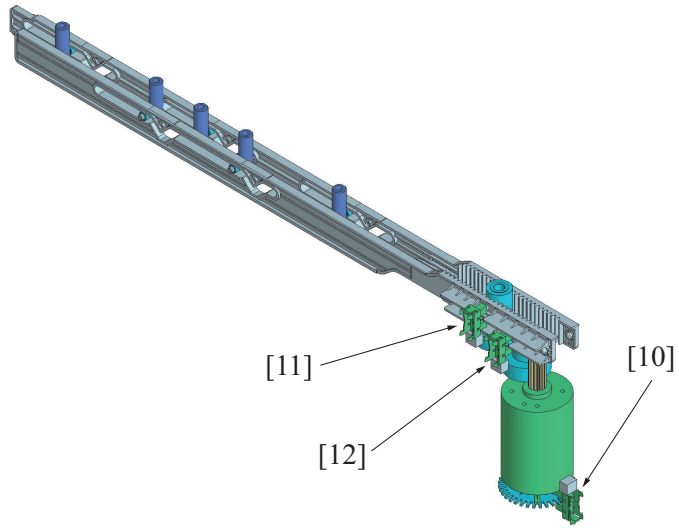

[1]	Puncher frame 1 *1	[2]	Puncher *2

[3]	Puncher drive gear	[4]	Punch drive motor (M1)
[5]	Puncher frame 2 *3	[6]	Punch dust full sensor/in (PS5)
[7]	Punch dust full sensor actuator	[8]	Punch dust box
[9]	Punch dust full sensor/out (PS4)	[10]	Punch motor sensor (PS3)
[11]	Punch home sensor (PS1)	[12]	Punch position sensor (PS2)

- *1: The shape of the puncher frame is varied depending on the type of punch kit.
- *2: The number of the puncher is varied depending on the type of punch kit.
- *3: The shape of the puncher frame is varied depending on the type of punch kit. 2 holes punch kit does not have the puncher frame 2.

6.1.1 Punch kit type

2 holes/3 holes kit (Selectable the hole number)

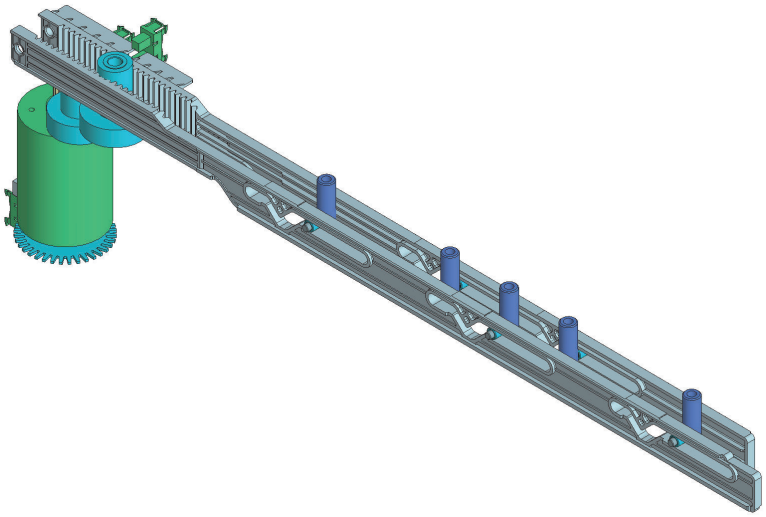

- Attachable Marketing area: Europe, US, Others 1-5

2 holes/4 holes kit (Selectable the hole number)

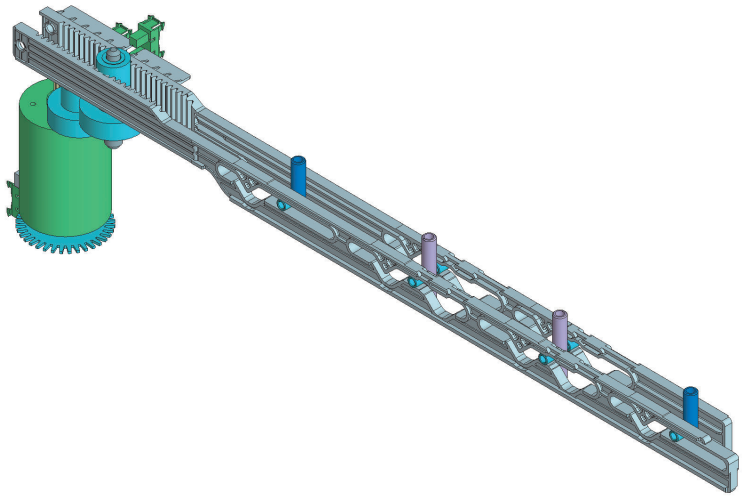

- Attachable Marketing area: Europe, US, Others

2 holes punch kit

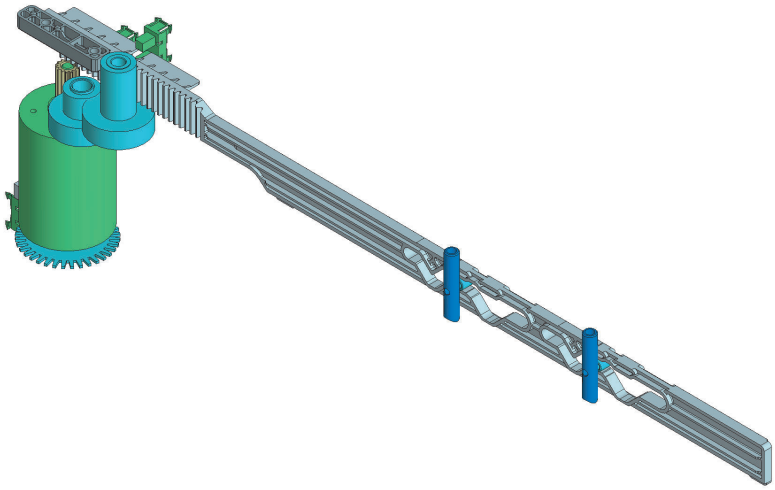

- Attachable Marketing area: Japan

4 holes punch kit

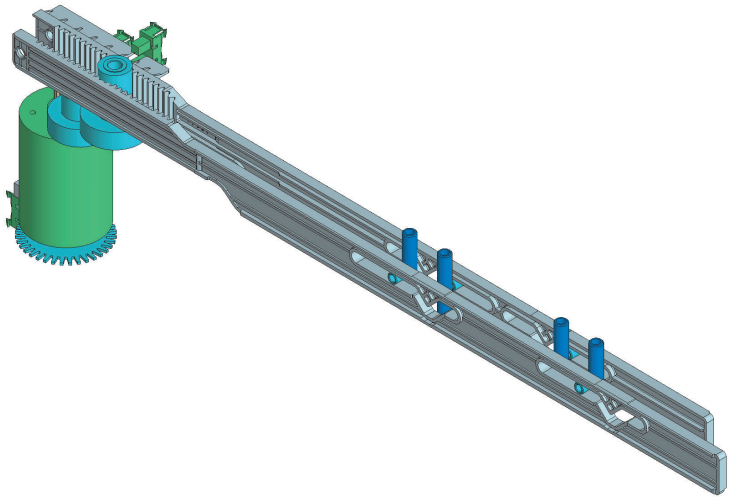

- Attachable Marketing area: Europe

6.2 Drive

- The drive source for the punch section is the punch drive motor. The puncher frame is driven in forward/reverse direction by rotating the punch drive motor in forward/reverse direction.
- When the puncher frame moves in forward/reverse direction, the puncher moves up/down by the cam of the puncher frame to punch the holes on the paper.
- Puncher frame 1 and the puncher frame 2 have cams with different shapes. It enables the puncher to move up/down.at different timings.
- When the puncher drive gear rotates clockwise, the puncher frame 1 shifts to the front side, and the puncher frame 2 shifts to the back side. When the puncher drive gear rotates counter-clockwise, the puncher frame 1 shifts to the back side, and the puncher frame 2 shifts to the front side. The puncher connected to the puncher frame then moves up/down with the cam. Switching the forward/reverse direction of the Punch drive motor, switches the number of punch holes.

Front view

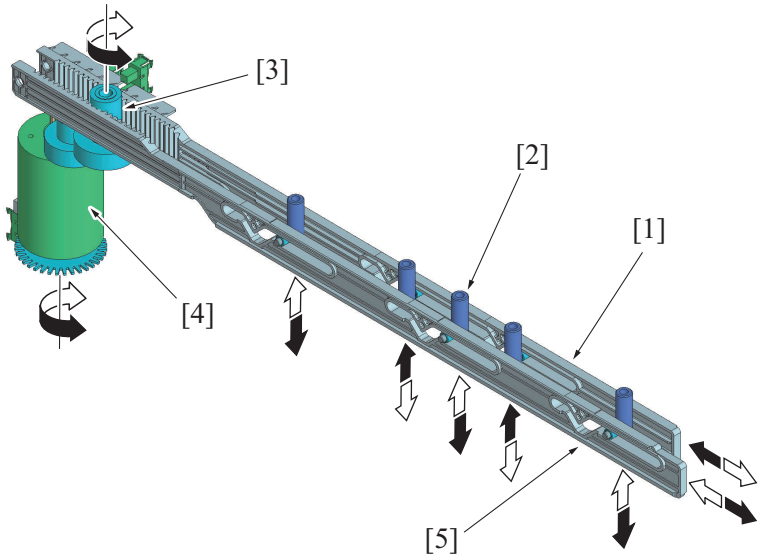

[1]	Puncher frame 1 *1	[2]	Puncher *2
[3]	Puncher drive gear	[4]	Punch drive motor (M1)
[5]	Puncher frame 2 *1	-	-

- *1: The shape of the puncher frame is varied depending on the type of punch kit.
- *2: The number of the puncher is varied depending on the type of punch kit.

NOTE

- **The illustration explains with an example for "2-hole/3-hole kit".**
- **With "2 hole/3 hole kit", the 2-hole puncher moves down when the puncher drive gear rotates clockwise. When the puncher drive gear rotates counter-clockwise, the 3-hole puncher moves down. The number of the punch holes is switched by the same configuration for "2-hole/4-hole kits".**
- **The "2-hole kit" and the "4-hole kit" do not have the punch hole switching function.**

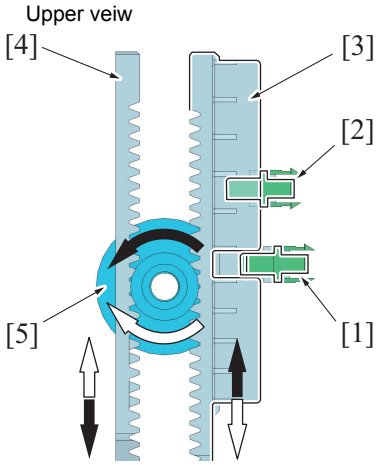

[1]	Punch home sensor (PS1)	[2]	Punch position sensor (PS2)
[3]	Puncher frame 1	[4]	Puncher frame 2
[5]	Puncher drive gear	-	-

6.3 Operation

6.3.1 Skew correction mechanism

- When punching holes, punch resist loop is formed upstream of FNS section transport roller/1 to remove the skew of the paper.

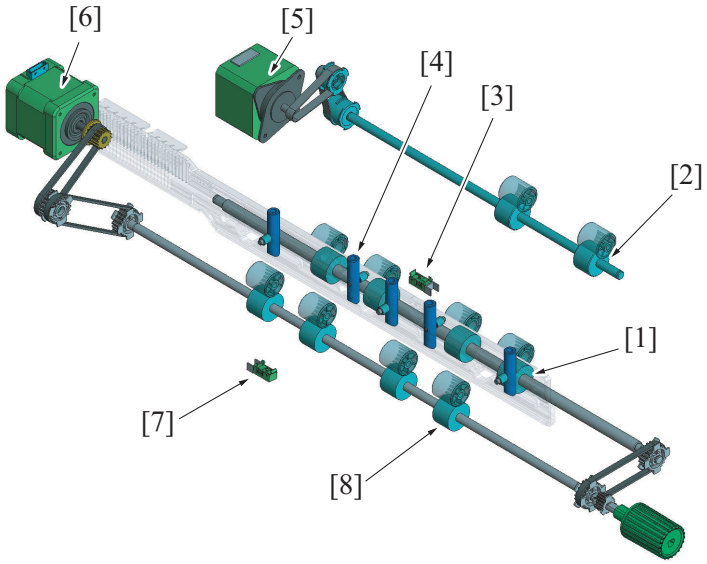

[1]	FNS section paper feed roller	[2]	RU section horizontal transport roller/3
[3]	FNS entrance sensor (PS4)	[4]	Puncher
[5]	RU transport motor (M1)	[6]	FNS entry transport motor (M2)
[7]	Main tray exit sensor (PS16)	[8]	FNS section transport roller

(1) Skew correction process

1. The paper is transported to the FNS section (finisher section) by the RU transport motor driving the RU section horizontal transport roller/3.
2. When the leading edge of the paper reaches to the FNS section paper feed roller, it is detected by the FNS entrance sensor.
3. The paper is pressed to the FNS section paper feed roller which is at a halt to form the loop at the leading edge of the paper to remove the skew of the paper.
4. The FNS entry transport motor is turned ON when the specified period of time has passed after the leading edge of the paper turns the FNS entrance sensor ON, to start rotating the FNS section paper feed roller and the FNS section transportation roller.
5. The paper which skew is removed is transported to the punch section by the FNS section paper feed roller, and then stop the specified position.
6. The holes are punched by the puncher.
7. The punched paper is transported to inside the transport section by the FNS section transportation roller.

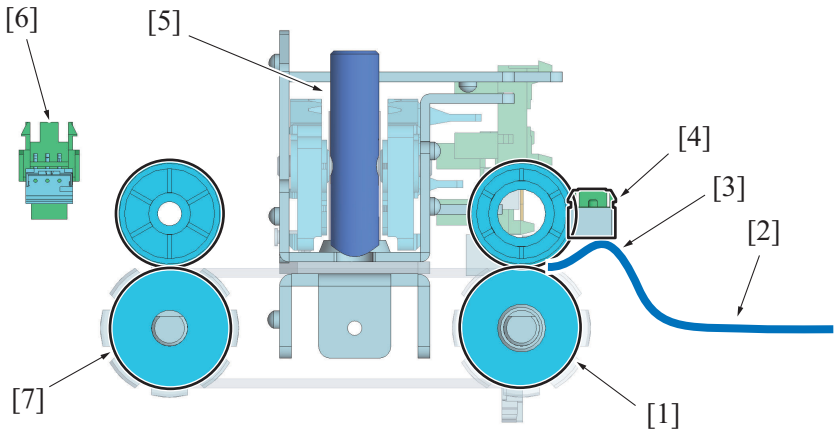

[1]	FNS section paper feed roller	[2]	Paper
[3]	The resist loop is created at the leading edge of the paper	[4]	FNS entrance sensor (PS4)
[5]	Puncher	[6]	Main tray exit sensor (PS16)
[7]	FNS section transport roller	-	-

(2) Punch Regist Loop Size Adjustment function

- Then the punch holes tilt, punch resist value for the Service Mode can be adjusted to adjust the punch holes.
- Punch resist value (resist loop value) changes by changing the timing the FNS section paper feed roller starts rotating. Tilt of the punch holes can be adjusted by removing the skew of the paper at the resist loop.
- For details of the adjustment procedures, see "Service Mode/Finisher/FS-FN adjustment/Punch Registration Loop Adj"

(a) Setting range

- -4.0 to +4.0

6.3.2 Puncher up/down status detection configuration

- When the puncher drive gear rotates clockwise, the puncher frame1 shifts to the front side, and the puncher frame 2 shifts to the back side. When the puncher drive gear rotates counter-clockwise, the puncher frame 1 shifts to the back side, and the puncher frame 2 shifts to the front side. The puncher which is connected to the puncher frame then moves up/down by the cam. Switching the forward/reverse rotation of the punch drive motor switches the number of the punch holes.
- Puncher frame 1 has two light-blocking plates to detect the position of the puncher frame.
- The punch drive motor has a round light-blocking plate and the puncher motor sensor on the same shaft to detect the rotation value (pulse) of the punch drive motor.
- The Up/down status of the puncher is detected by the coordination input from the puncher position sensor, punch home sensor, and the punch motor sensor.

Rear view

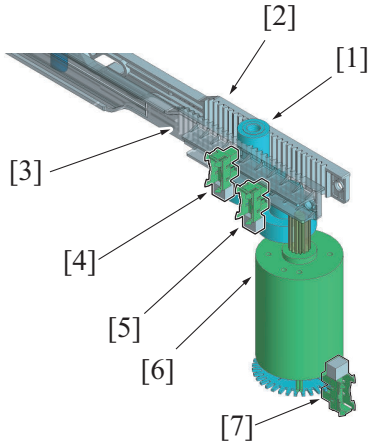

[1]	Puncher drive gear	[2]	Puncher frame 2
[3]	Puncher frame 1	[4]	Punch home sensor (PS1)
[5]	Punch position sensor (PS2)	[6]	Punch drive motor (M1)
[7]	Punch motor sensor (PS3)	-	-

Upper view

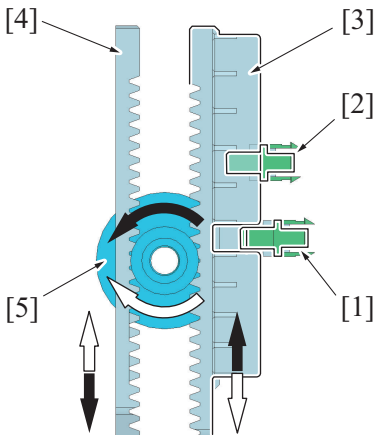

[1]	Punch home sensor (PS1)	[2]	Punch position sensor (PS2)
[3]	Puncher frame 1	[4]	Puncher frame 2
[5]	Puncher drive gear	-	-

Front view

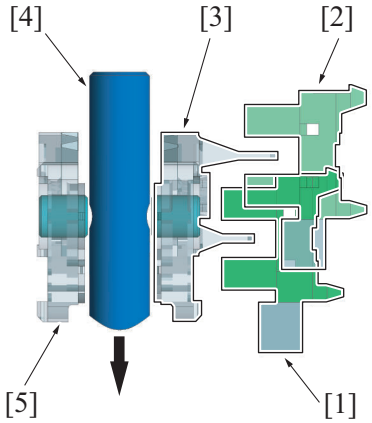

[1]	Punch position sensor (PS2)	[2]	Punch home sensor (PS1)
[3]	Puncher frame 1	[4]	Puncher
[5]	Puncher frame 2	-	-

6.3.3 Punch dust box full detection mechanism

- Punch dust created by punching holes on the paper, are collected in the punch dust box.
- The punch unit has a sensor to detect a punch dust full condition at the front side (emission) and the back side (receiving). The sensor detects the status of the punch dust.
- When the punch dust is accumulated inside the punch dust box, the sensor light on punch dust full sensor/out side is interfered by the punch dust. The punch dust box is determined to be full when the sensor light is blocked. A message is displayed on the operation panel to indicate a "punch dust full" condition when a punch dust box full is detected.

NOTE

- **When the punch dust box is removed, the sensor light on punch dust full sensor/out side is blocked by the actuator on the punch unit. When the front door is closed is point and the punch job is set a message is displayed on the operation panel to indicate a "Punch dust full" condition.**
- **When the empty punch dust box is installed, the sensor light blocked by the actuator, reaches punch dust full sensor/in, and the "punch dust full" message on the operation panel disappears.**

Front view

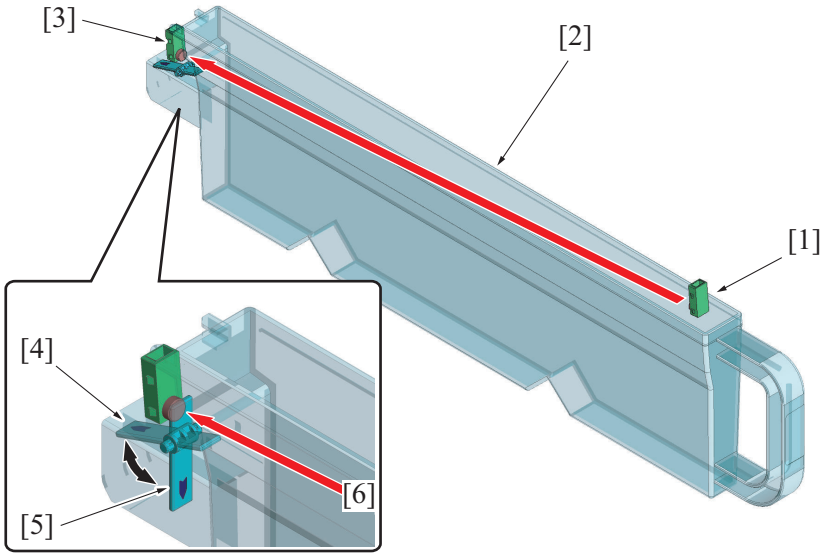

[1]	Punch dust full sensor/out (PS4)	[2]	Punch dust box
[3]	Punch dust full sensor/in (PS5)	[4]	Actuator (Punch dust box is installed position)
[5]	Actuator (Punch dust box is not installed position)	[6]	Sensor light

Side view

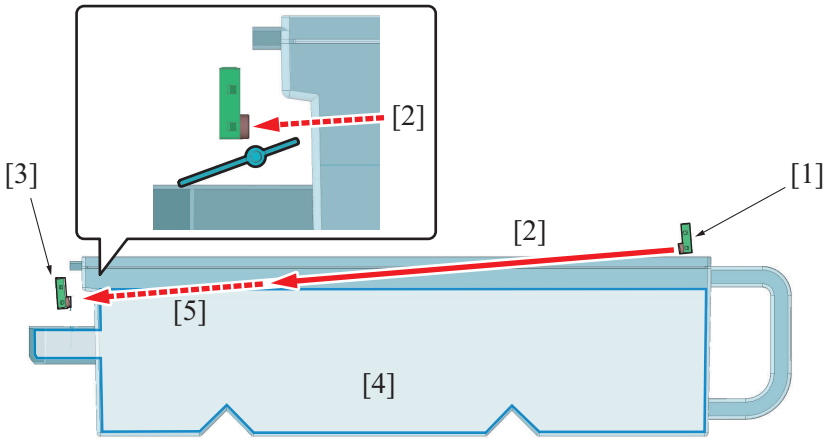

[1]	Punch dust full sensor/out (PS4)	[2]	Sensor light
[3]	Punch dust full sensor/in (PS5)	[4]	Punch dust (full detection level)
[5]	Punch dust interfere the sensor light	-	-

Punch dust full message: typical



(1) Unit change function

- The screen to be displayed when a punch dust full is detected can be enabled or disabled in the “Unit Change” in the Service Mode.

Service Mode/System Input screen: typical

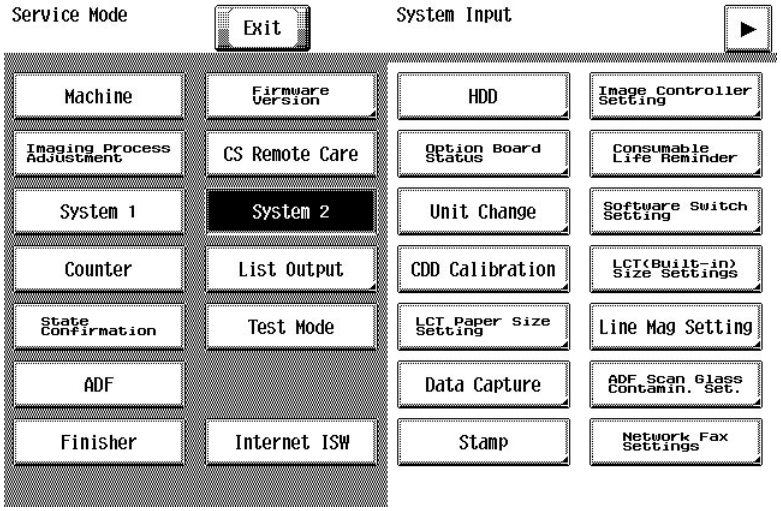

System 2/Unit Change screen: typical

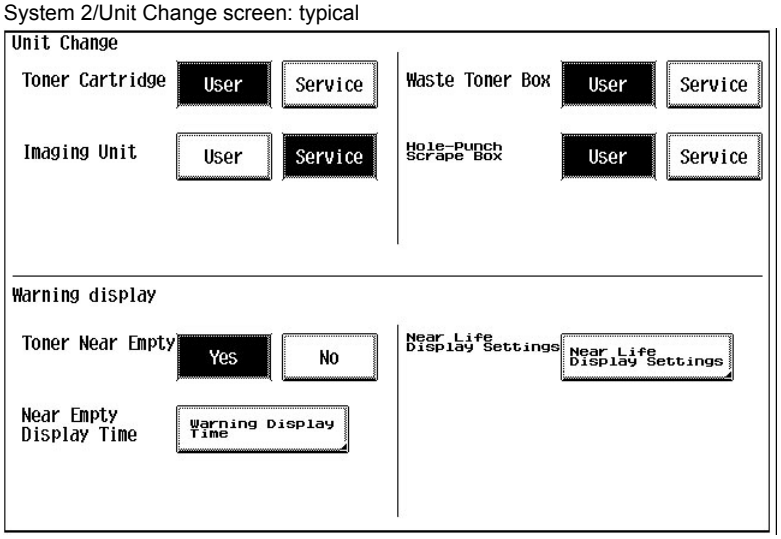

NOTE

- **For details of the Service Mode, see "I.11.15.5 Unit Change"**

7. TRANSPORT SECTION

7.1 Configuration

The transport section transports the paper from the RU section (horizontal transport section) to the three paper paths within the FNS section (finisher section).

Paper transport to the sub tray

- The paper path switching gate, moves the paper transported from the RU section to the sub tray paper path to deliver the paper to the sub tray.

  NOTE

  - **The paper is directly delivered to the sub tray without passing through the alignment and exit sections. If "Sub Tray" is selected as exit tray for a print job, the offset option (sort/group/staple) is unavailable.**

Paper transport to the main tray

- The paper path switching gate moves the paper transported from the RU section to the main tray paper path. The paper passes through the alignment and exit sections, and then moves to the main tray.

Paper transport to the saddle section

- The paper path switching gate moves the paper transported from the RU section to the main tray paper path. Switchback of the paper is done at the transport section and then the paper passes through the vertical transport section, and moves to the saddle section.

  NOTE

  - **Paper can be transported to the saddle section only when the optional saddle stitcher SD-511 is added to the finisher FS-534.**

7.1.1 Paper feed section - sub tray section

Front perspective view

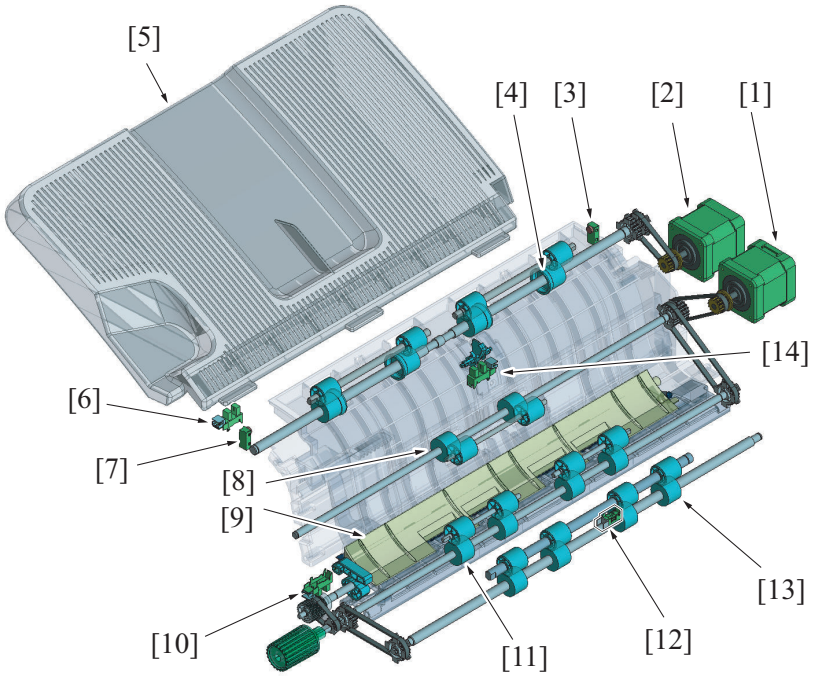

[1]	FNS entry transport motor (M2)	[2]	FNS discharge motor (M3)
[3]	Sub tray full detection sensor/out (PS9)	[4]	Sub tray section exit roller
[5]	Sub tray	[6]	Upper cover open/close detection sensor (PS32)
[7]	Sub tray full detection sensor/in (PS10)	[8]	Sub tray section vertical transport roller
[9]	Paper path switching gate	[10]	Exchange folded paper output sensor(PS30)
[11]	FNS section transport roller	[12]	FNS entrance sensor (PS4)
[13]	FNS section paper feed roller	[14]	Sub tray exit sensor (PS8)

Front view

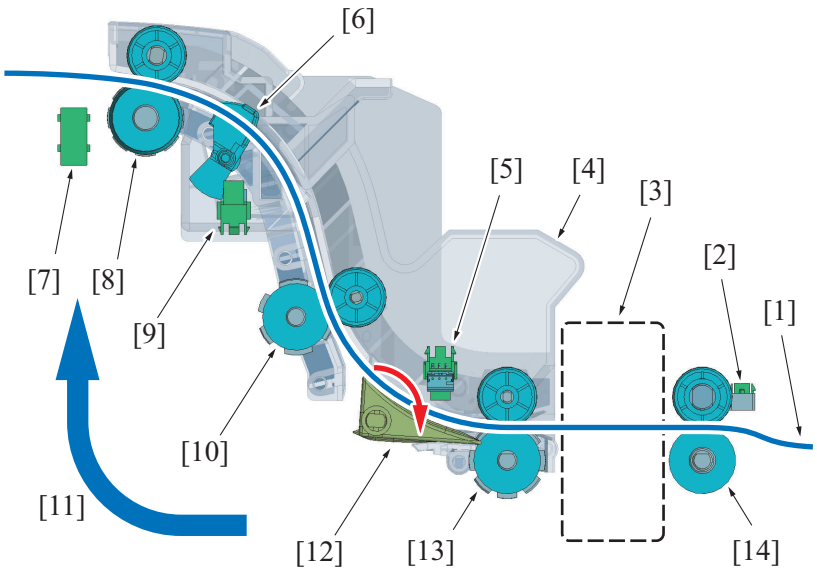

[1]	Paper path	[2]	FNS entrance sensor (PS4)
[3]	Punch kit PK-520	[4]	Jam removal cover (sub tray transport route)
[5]	Exchange folded paper output sensor(PS30)	[6]	Sub tray exit sensor actuator
[7]	Sub tray full detection sensor	[8]	Sub tray section exit roller
[9]	Sub tray exit sensor (PS8)	[10]	Sub tray section vertical transport roller
[11]	Paper feeding direction	[12]	Paper path switching gate (lower position)
[13]	FNS section transport roller	[14]	FNS section paper feed roller

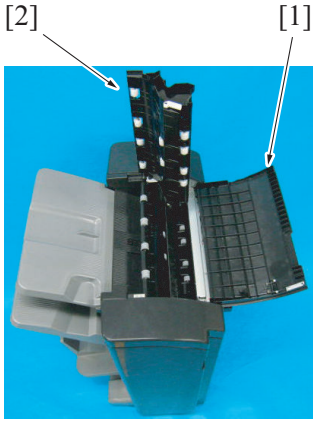

[1]	Upper door	[2]	Jam removal cover (sub tray transport route)

7.1.2 Paper feed section - main tray section

Front perspective view

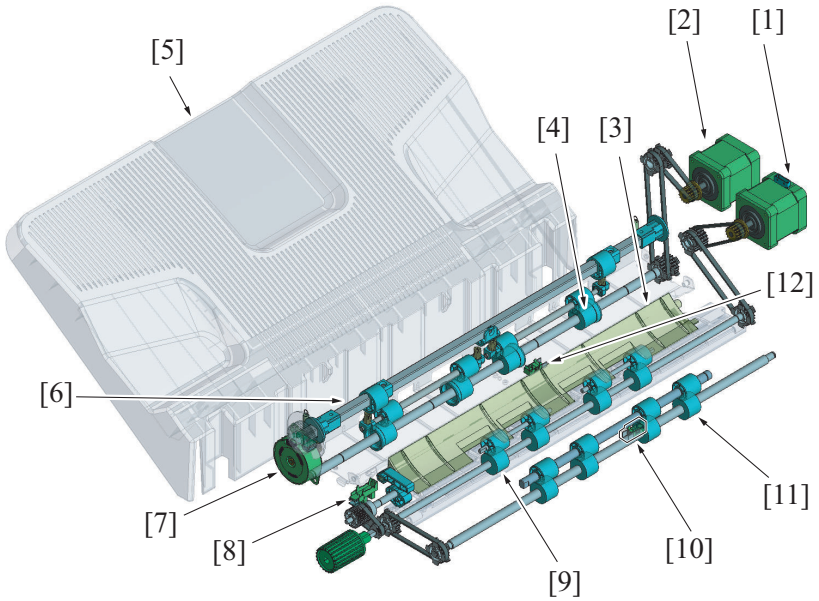

[1]	FNS entry transport motor (M2)	[2]	FNS discharge motor (M3)
[3]	Paper path switching gate	[4]	Receiving roller
[5]	Main tray	[6]	Receiving roller pressure cam
[7]	Receiving roller retraction motor (M4)	[8]	Exchange folded paper output sensor (PS30)
[9]	FNS section transport roller	[10]	FNS entrance sensor (PS4)
[11]	FNS section paper feed roller	[12]	Main tray exit sensor (PS16)

Front view

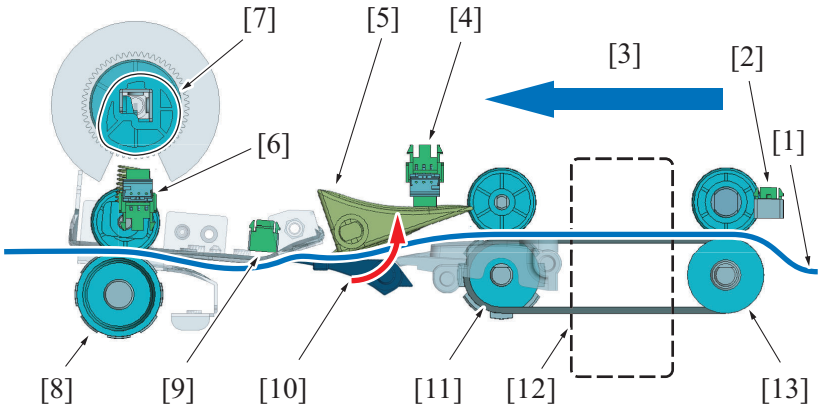

[1]	Paper path	[2]	FNS entrance sensor (PS4)
[3]	Paper feeding direction	[4]	Exchange folded paper output sensor(PS30)
[5]	Paper path switching gate (upper position)	[6]	Receiving roller retraction sensor (PS11)
[7]	Receiving roller pressure cam	[8]	Receiving roller
[9]	Main tray exit sensor (PS16)	[10]	Movable paper guide
[11]	FNS section transport roller	[12]	Punch kit PK-520
[13]	FNS section paper feed roller	-	-

7.1.3 Main tray section - saddle section

Front perspective view

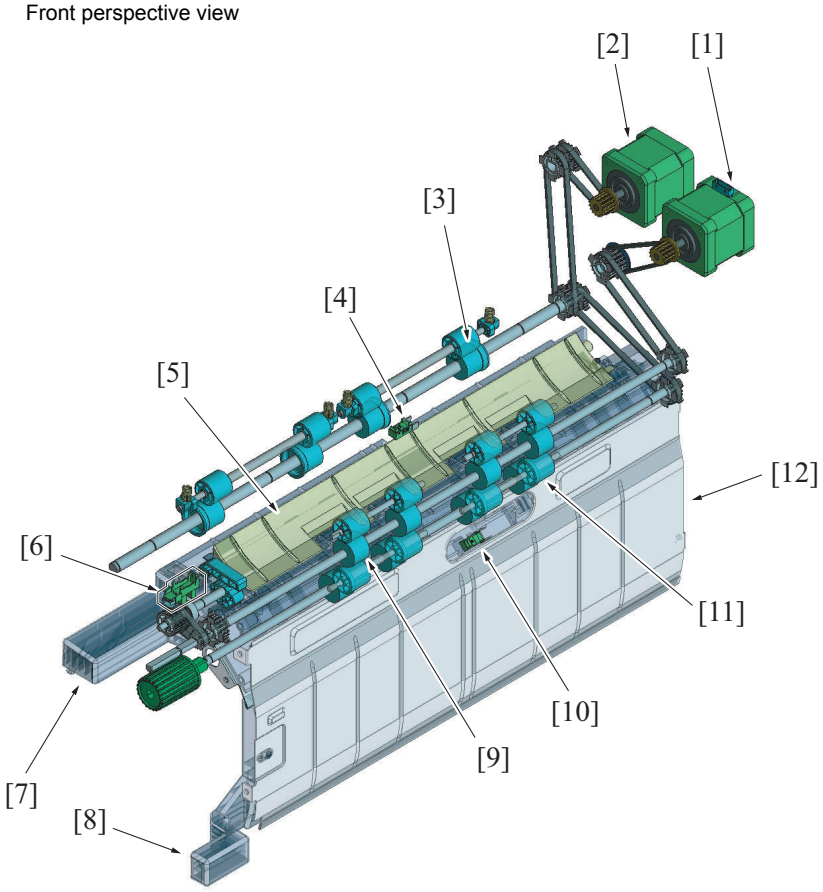

[1]	FNS entry transport motor (M2)	[2]	FNS discharge motor (M3)
[3]	Receiving roller	[4]	Main tray exit sensor (PS16)
[5]	Paper path switching gate	[6]	Exchange folded paper output sensor (PS30)
[7]	Jam removal cover (horizontal transport section)	[8]	Jam removal cover (vertical transport section)*1
[9]	FNS section transport roller	[10]	Saddle exit sensor (PS5)
[11]	FNS section exit roller	[12]	FNS section vertical transport guide

- *1: Only when the SD-511 is added to the finisher.

Friont view

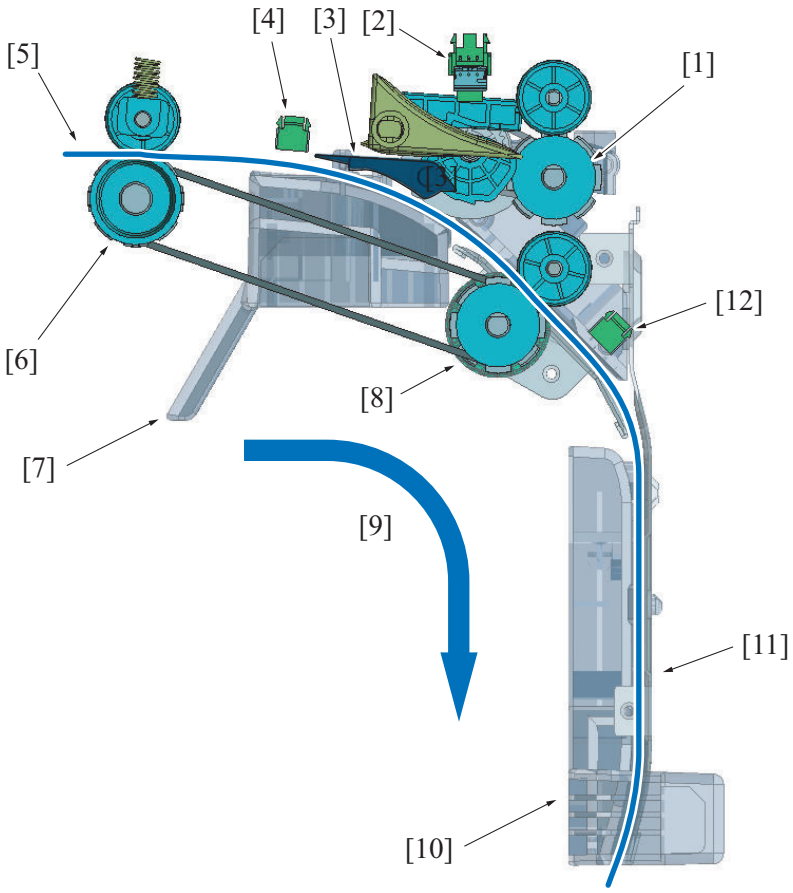

[1]	FNS section transport roller	[2]	Exchange folded paper output sensor (PS30)
[3]	Movable paper guide	[4]	Main tray exit sensor (PS16)
[5]	Paper path	[6]	Receiving roller
[7]	Jam removal cover (horizontal transport section)	[8]	FNS section exit roller
[9]	Paper feeding direction	[10]	Jam removal cover (vertical transport section)*1
[11]	FNS section vertical transport guide	[12]	Saddle exit sensor (PS5)

- *1: Only when the SD-511 is added to the finisher.

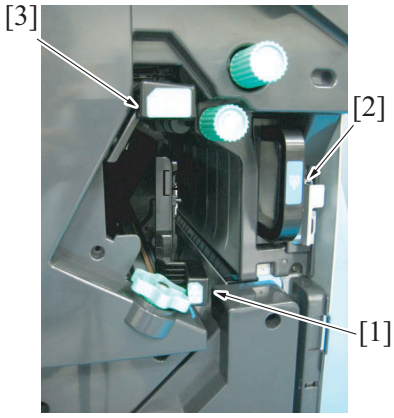

[1]	Jam removal cover (vertical transport section) (Open position)	[2]	Punch dust box*1
[3]	Jam removal cover (horizontal transport section) (Close position)*2	-	-

- *1: Only when the PK-520 is added to the finisher.
- *2: Only when the SD-511 is added to the finisher.

7.2 Drive

The driving source of the FNS section is the FNS entry transport motor, FNS discharge motor, and receiving roller retraction motor, and the following parts are driven.

Driving source	Driving parts	Function
FNS entry transport motor (M2)	FNS section paper feed roller	Feeds paper to the FNS section

Driving source	Driving parts	Function
	FNS section vertical transport roller	Transports paper to each paper path in the FNS section.
	Paper path switching gate	Switches paper path by the paper path switching gate up/down movement triggered by the cam.
	Sub tray section vertical transport roller	Transports paper to the sub tray section exit roller. (sub tray paper path)
FNS discharge motor (M3)	Sub tray section exit roller	Transports paper to the sub tray. (sub tray paper path)
	Receiving roller	• Normal rotation: Transports paper to alignment section. (main tray paper path) • Reverse rotation: Transports paper to the saddle section. (saddle section paper path)
	FNS section exit roller	Transports paper from the alignment section to the saddle section via the switchback. (saddle section paper path)
Receiving roller retraction motor (M4)	Receiving roller pressure roll	The receiving roller pressure roll is moved up/down by the cam. (main tray paper path) • When the pressure roll is lowered, the paper on the receiving roller is pressed against the receiving roller. When the receiving roller rotates in the normal direction, the paper is transported to the alignment section. When the receiving roller rotates in the reversed direction, the paper is conveyed to the path to the saddle section via the switchback. • When the pressure roll moves up, the paper on the receiving roller is released. The paper is not transported and brought into a standby state.

7.2.1 FNS entry transport motor

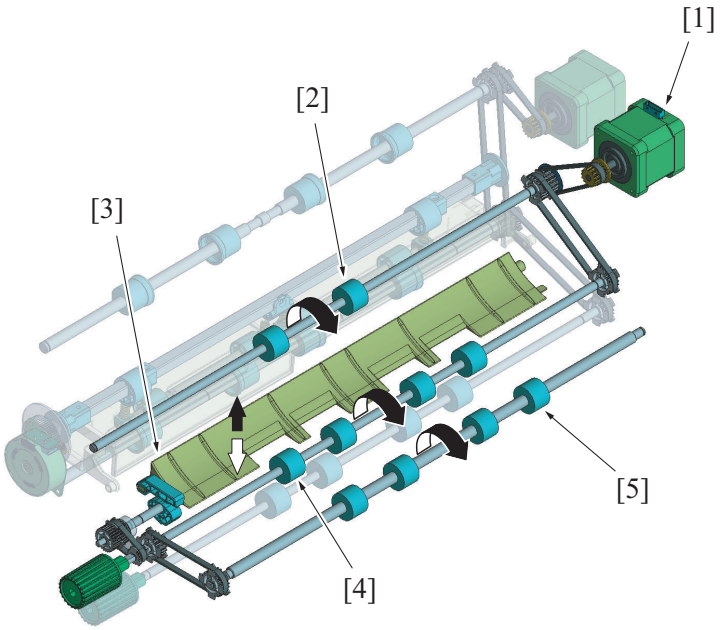

[1]	FNS entry transport motor (M2)	[2]	Sub tray section vertical transport roller
[3]	Paper path switching gate	[4]	FNS section transport roller
[5]	FNS section paper feed roller	-	-

7.2.2 FNS discharge motor

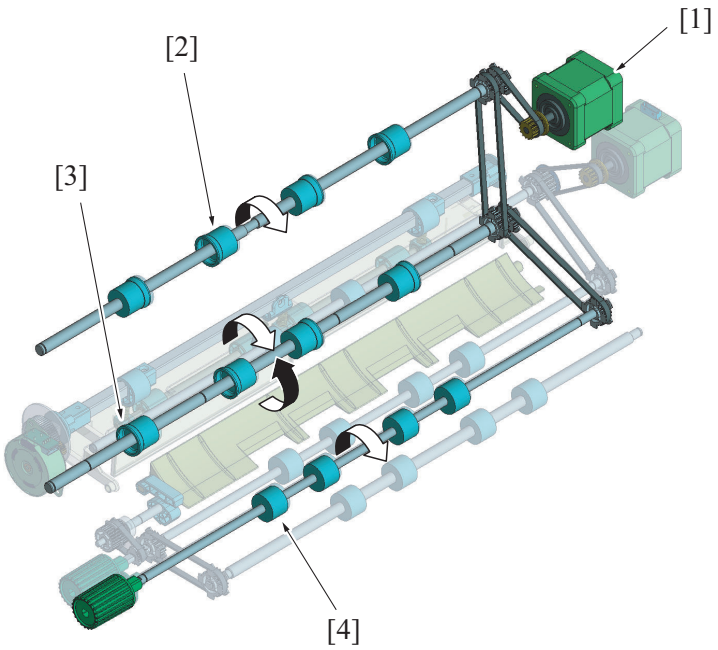

[1]	FNS discharge motor (M3)	[2]	Sub tray section exit roller
[3]	Receiving roller	[4]	FNS section exit roller

7.2.3 Receiving roller retraction motor

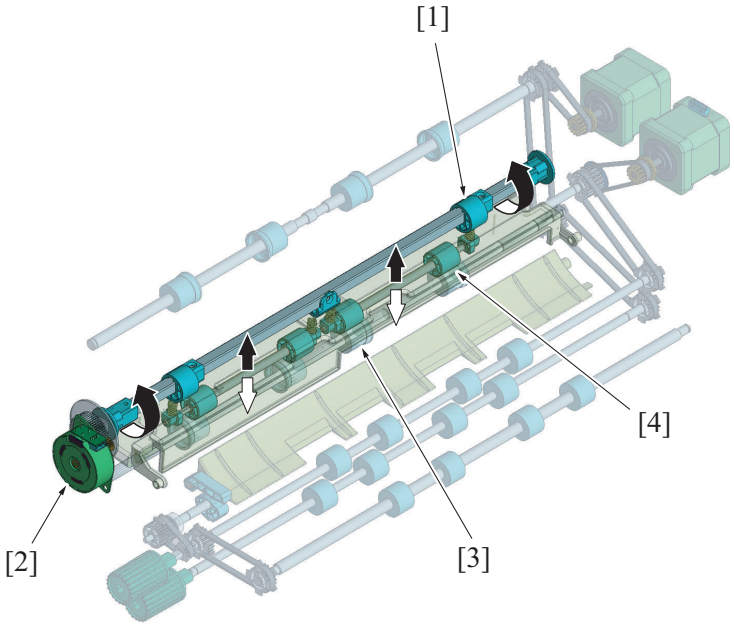

[1]	Receiving roller pressure cam	[2]	Receiving roller retraction motor (M4)
[3]	Receiving roller *	[4]	Receiving roller pressure roll

- *: The driving source of the receiving roller is the FNS discharge motor. The driving source of the receiving roller pressure roll is the receiving roller retraction motor.

7.3 Operation

7.3.1 Paper path switching mechanism

- Paper path is switched by the up/down operations of the paper path switching gate to transport paper to each tray or the saddle section.
- The up/down operations of the paper path switching gate is driven by the FNS entry transport motor.
- The position of the paper path switching gate is detected by the exchange folded paper output sensor.

Front perspective view

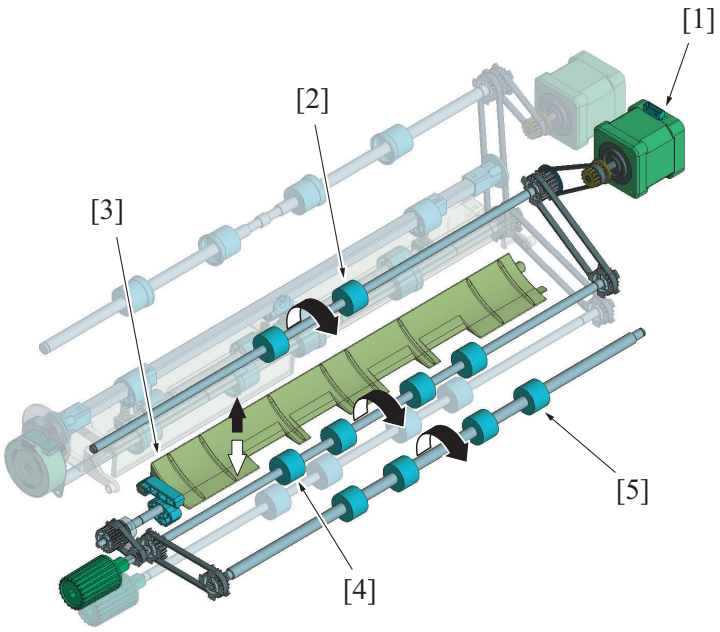

[1]	FNS entry transport motor (M2)	[2]	Sub tray section vertical transport roller
[3]	Paper path switching gate	[4]	FNS section transport roller
[5]	FNS section paper feed roller	-	-

(1) Gate lower position (paper path: sub tray)

- When the cam rotates, the paper path switching gate moves down to block the paper path to the main tray. The paper passes on the top of the paper path switching gate and is transported to the sub tray.
- When the detection plate located on the shaft, on which the cam is located, rotates, the exchange folded paper output sensoris unblocked. This causes machine to determine that the gate is at the lower position.
- When the paper is transported through the sub tray paper path, the sub tray exit sensor located downstream of the paper path switching gate detects the paper conveyance.

Front view: Illustration on the relationship between the cam and paper path switching gate

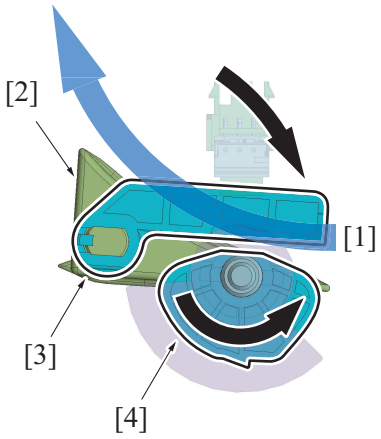

[1]	Paper	[2]	Paper path switching gate (lower position)
[3]	Lever	[4]	Cam

Front view: Illustration on the relationship between the detection plate and the exchange folded paper output sensor

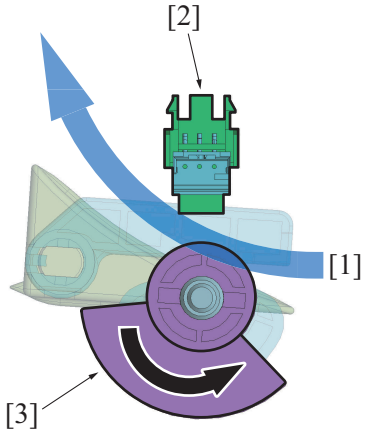

[1]	Paper	[2]	Exchange folded paper output sensor (PS30)
[3]	Detection plate	-	-

(2) Gate upper position (paper path: main tray)

- When the cam rotates, the paper path switching gate moves up to block the paper path to the sub tray. The paper passes on the bottom of the paper path switching gate and is transported to the main tray.
- When the detection plate located on the shaft, on which the cam is located, rotates, the exchange folded paper output sensoris blocked. This causes machine to determine that the gate is at the upper position.
- When the paper is transported through the sub tray paper path, the staple stacker paper detection sensor located downstream of the paper path switching gate detects the paper conveyance.

Front view: Illustration on the relationship between the cam and paper path switching gate

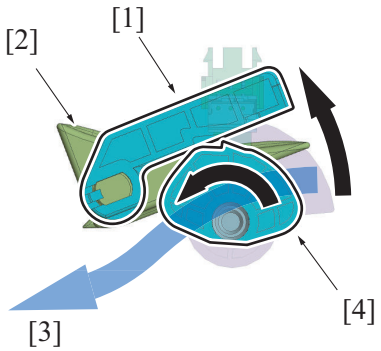

[1]	Lever	[2]	Paper path switching gate (upper position)
[3]	Paper	[4]	Cam

Front view: Illustration on the relationship between the detection plate and the exchange folded paper output sensor

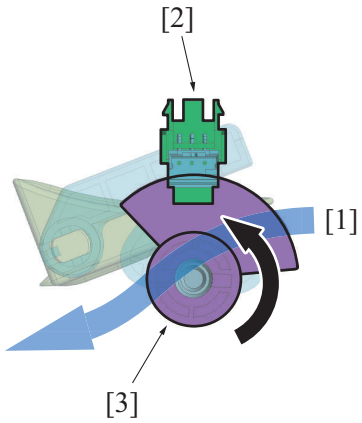

[1]	Paper	[2]	Exchange folded paper output sensor(PS30)
[3]	Detection plate	-	-

7.3.2 Receiving roller section up/down function

- The up/down movement of the receiving roll, switches the timing of transporting the paper to the alignment section. (Buffer control)
- The up/down operations of the receiving roll are driven by the receiving roller retraction motor.
- The position of the receiving roll is detected by the receiving roller retraction sensor.

Front perspective view

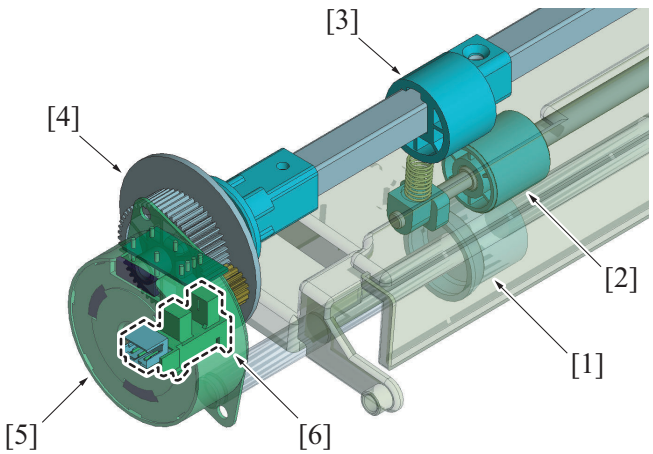

[1]	Receiving roller	[2]	Receiving roll
[3]	Receiving roller pressure cam	[4]	Detection plate

[5]	Receiving roller retraction motor (M4)	[6]	Receiving roller retraction sensor (PS11)

(1) Receiving roller: pressure position

- When the cam rotates, the receiving roll is lowered and pressed against the receiving roller. The paper is transported to the alignment section by the receiving roller.
- When the detection plate located on the shaft, on which the cam is located, rotates, the receiving roller retraction sensor is unblocked. This causes machine to determine that the receiving roll moves down (pressed).

Front view: Illustration on the relationship between the cam and roll

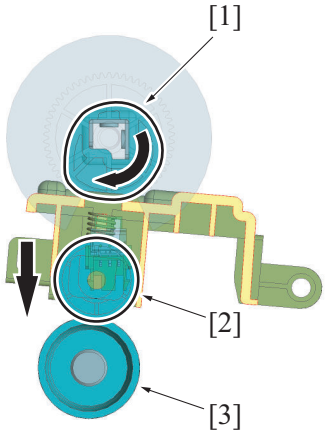

[1]	Receiving roller pressure cam (pressure position)	[2]	Receiving roll (pressure position)
[3]	Receiving roller	-	-

Front view: Illustration on the relationship between the detection plate and sensor

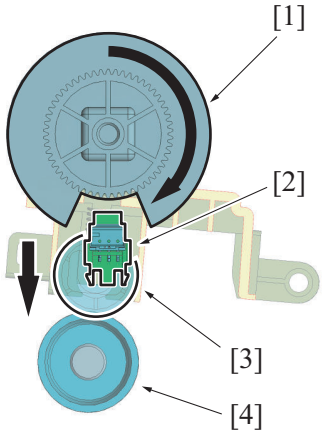

[1]	Detection plate (pressure position)	[2]	Receiving roller retraction sensor (PS11) (unblocked)
[3]	Receiving roll (pressure position)	[4]	Receiving roller

(2) Receiving roller: release position

- The receiving roll is lifted by the cam and retracted from the receiving roller. The paper is brought to a standby state on the transport paper path.
- The detection plate located on the shaft, on which the cam is located, rotates and blocks the receiving roller retraction sensor. This causes machine to determine that the receiving roll moves up (retracted).

Front view: Illustration on the relationship between the cam and roll

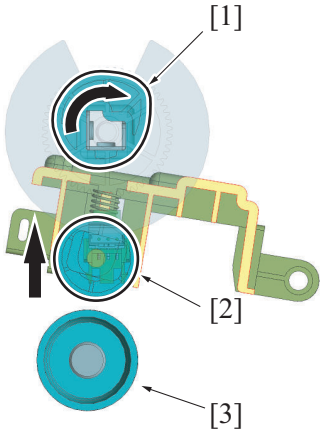

[1]	Receiving roller pressure cam (release position)	[2]	Receiving roll (release position)
[3]	Receiving roller	-	-

Front view: Illustration on the relationship between the detection plate and sensor

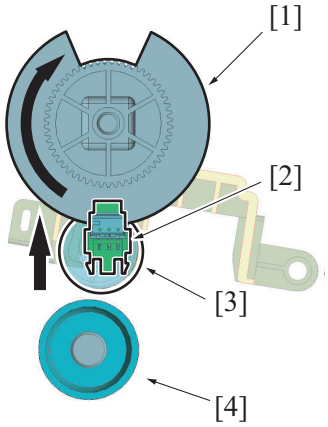

[1]	Detection plate (release position)	[2]	Receiving roller retraction sensor (PS11) (blocked)
[3]	Receiving roll (release position)	[4]	Receiving roller

7.3.3 Buffer control

- The receiving roller section up/down mechanism is provided to achieve high productivity, by eliminating the time loss for the next sheet of paper during the offset and staple operations.
- This allows handling a print job without reducing the paper transport speed even under the condition where the preceding sets of sheets are being aligned and stapled.

Front view

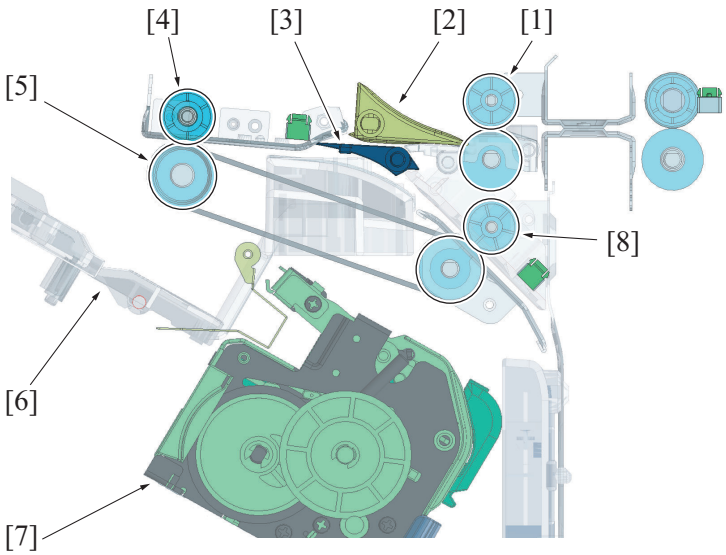

[1]	FNS section transport roller	[2]	Paper path switching gate
[3]	Movable paper guide	[4]	Receiving roll
[5]	Receiving roller	[6]	Alignment tray
[7]	Staple unit	[8]	FNS section exit roller

(1) Paper transport operation

- The following explains the example of a print job where 5 sheets of paper is stapled together and 2 sets are output.

1. When the first set of paper passes, the receiving roll transports the paper to the alignment section without being lifted. The 5 sheets of the first set are aligned and then stapled.

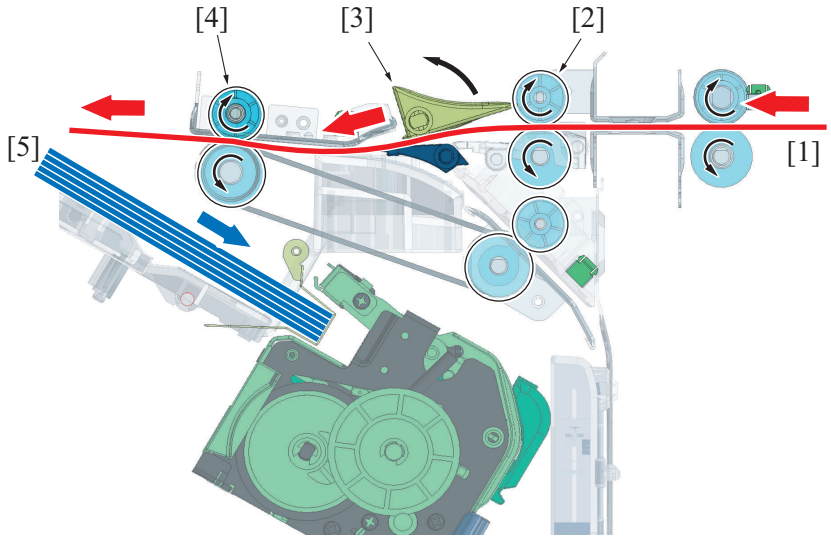

[1]	First sheet in the second set	[2]	FNS section transport roller (forward rotation)
[3]	Paper path switching gate (upper position)	[4]	Receiving roll (pressure, forward rotation)
[5]	First set of sheets (transported to the alignment section)	-	-

2. While the first set of sheets is being aligned, the first sheet in the second set causes the receiving roller to rotate in the reverse direction when the trailing edge of the sheet passes the movable paper guide. This causes the first sheet to move on the switchback until its trailing edge reaches the path to the saddle unit. (This operation is performed to avoid blocking the paper path for the second sheet.)

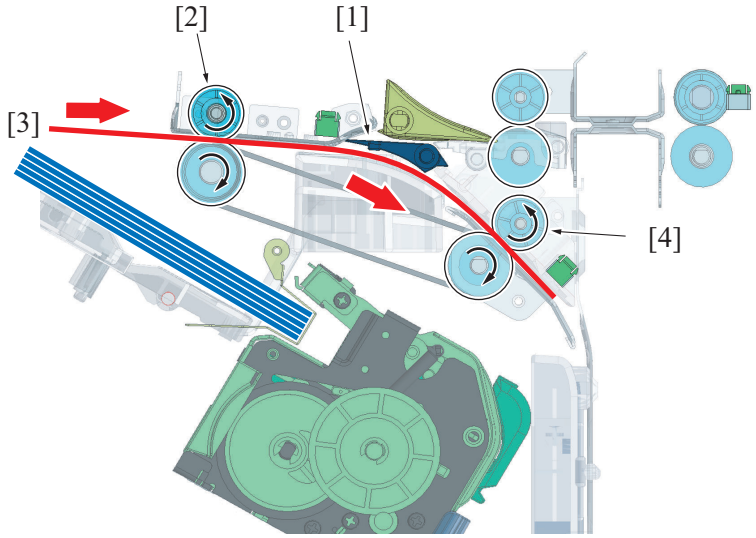

[1]	Movable paper guide	[2]	Receiving roll (pressure, reverse rotation)
[3]	First sheet in the second set (switchback)	[4]	FNS section exit roller (reverse rotation)

3. The receiving roll is lifted. The first sheet of paper that lost the force of being transported stays on the transport path.
4. While the first set is being stapled, the second sheet of the second set is transported and it is placed on the top of the first sheet of the second set.

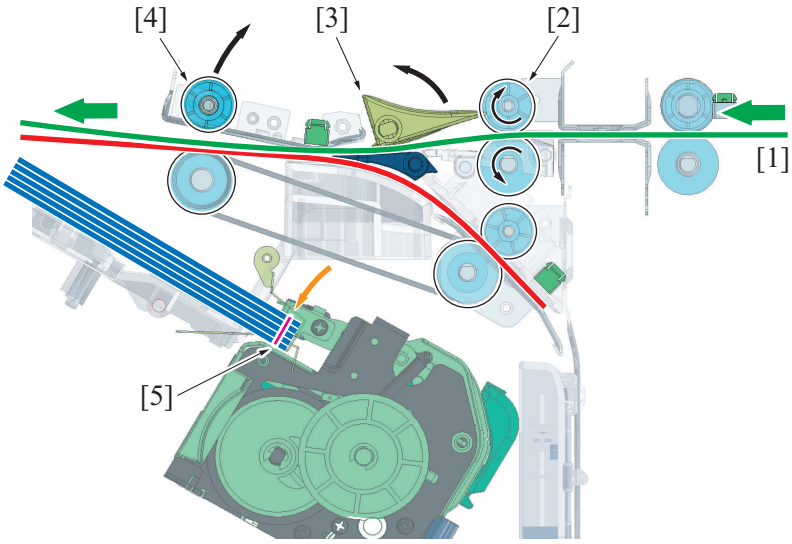

[1]	Second sheet of the second set	[2]	FNS section transport roller (forward rotation)
[3]	Paper path switching gate (upper section)	[4]	Receiving roll (release, stop)
[5]	First sheet (staple)	-	-

5. The receiving roll is lowered onto the 2nd set. Two sheets of the second set are transported to the alignment section. (Paper transport time is reduced by moving multiple sheets in one paper transport operation.)
6. While the first and second sheets of the second set are transported to the alignment section, the stapled first set is delivered to the main tray.

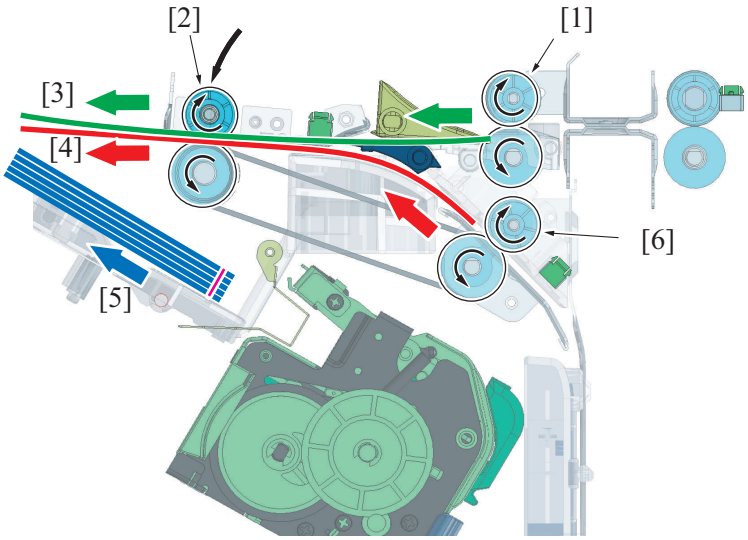

[1]	FNS section transport roller (forward rotation)	[2]	Receiving roll (pressure, forward rotation)
[3]	Second sheet of the second set	[4]	First sheet in the second set
[5]	First set of sheets	[6]	FNS section exit roller (forward rotation)

7. The receiving roll is not lifted when the third to fifth sheets of the second set passes through the roller. These sheets are transported to the alignment section in the normal manner.
8. When the fifth sheet of the second set is transported to the alignment tray, the second set is stapled.
9. The operations described above are repeated when multiple staple jobs are performed.

7.3.4 Sub tray exit mechanism

- Paper transported from the RU section is delivered to the sub tray by the sub tray section exit roller, via the FNS section paper feed roller, FNS section transport roller, and sub tray section vertical transport roller.
- To transport paper to the sub tray, the paper path switching gate also operates.
- The sub tray section exit roller is driven by the FNS discharge motor.

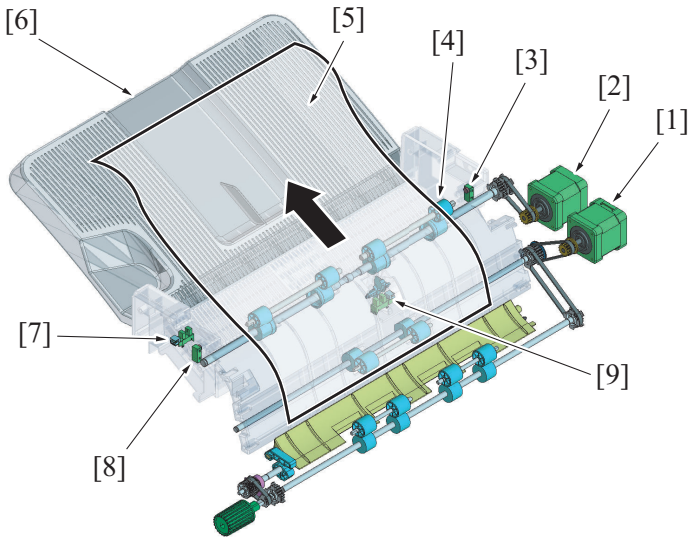

[1]	FNS entry transport motor (M2)	[2]	FNS discharge motor (M3)
[3]	Sub tray full detection sensor/out (PS9)	[4]	Sub tray exit roller
[5]	Paper	[6]	Sub tray
[7]	Upper cover open/close detection sensor (PS32)	[8]	Sub tray full detection sensor/in (PS10)
[9]	Sub tray exit sensor (PS8)	-	-

8. ALIGNMENT SECTION

8.1 Configuration

In the alignment section, paper transported from the transport section is aligned and delivered to the main tray.

Upper paddle section

- Paper ejected from the receiving roller in the transport section is guided to the alignment section by the lowered paper guide.
- The paper led to the alignment section will be switchbacked to the alignment tray by the upper paddle. The paper is aligned at its rear edge by being pressed to the rear edge stopper. (FD alignment operation of the paper)

Exit section (Receiving operation)

- The paper is switchbacked to the alignment tray by the lower paddle and the upper paddle. The paper is aligned at its rear edge by being pressed to the rear edge stopper. (FD alignment operation of the paper)

Exit section (Exit operation)

- When paper alignment is completed, the trailing edge of the paper is gripped by the gripper.
- The rear stopper/C is shifted to press the paper out, and then the gripper receives the paper. The gripper then discharges the paper to the main tray.

Stopper section

- The paper is pressed against the stopper by the upper paddle so that the trailing edges of the paper are aligned. (paper alignment operation in FD)
- If paper is stapled (2-point stapling), the stopper is retracted to the position where it does not interfere with the trailing edge stopper/F and trailing edge stopper/R.

Alignment tray section

- The alignment plates are moved to the center so that they can support paper that passes on their top surface. (Alignment plates are used as paper guide.)
- If paper is not offset stacked, it is placed between the alignment plates so that both ends of the paper are aligned at the center position of the alignment tray. (Paper alignment operation in CD)
- The paper gathered at the front or rear side on the alignment plate will be aligned on both sides of the paper. This process is repeated to sort out the paper. (CD alignment and shift operation of the paper)

Alignment section: Front perspective view

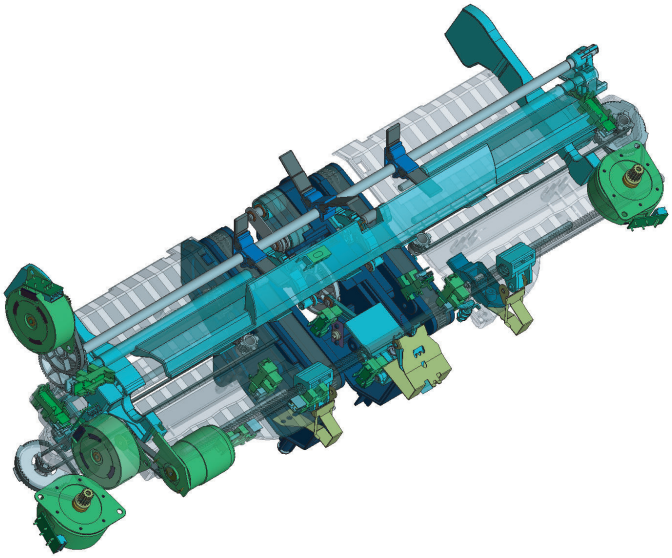

8.1.1 Upper paddle section

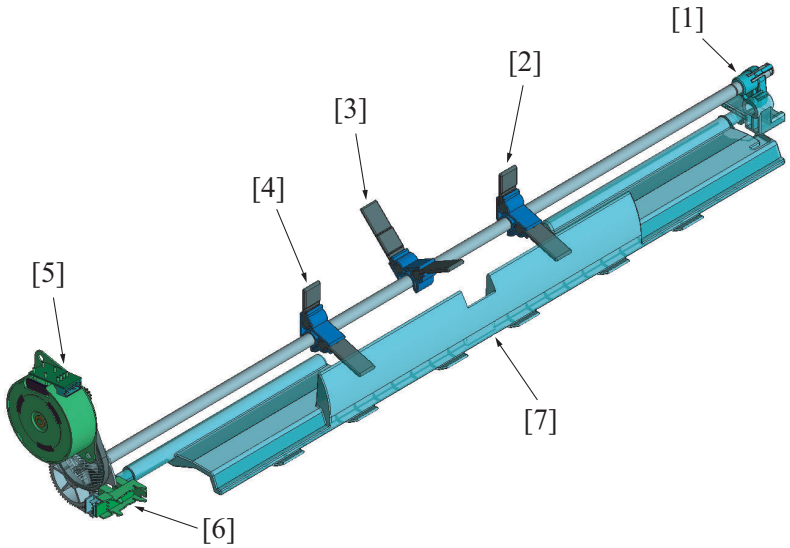

[1]	Cam	[2]	Upper paddle (rear)
[3]	Upper paddle (center)	[4]	Upper paddle (front)

[5]	FNS paddle motor (M5)	[6]	Upper paddle homeposition detection sensor (PS14)
[7]	Paper guide	-	-

8.1.2 Exit section

Exit section: Front perspective view

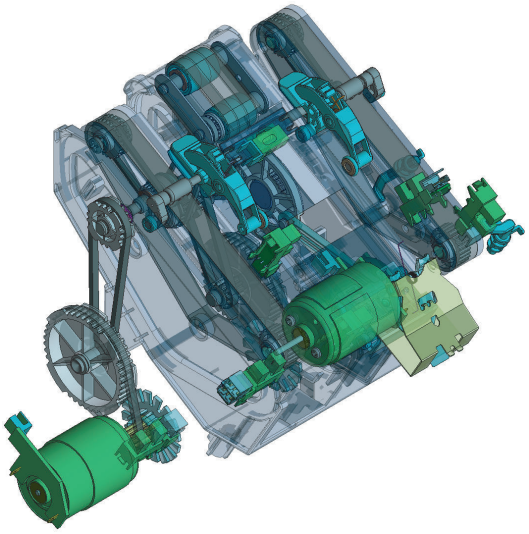

(1) Lower paddle section

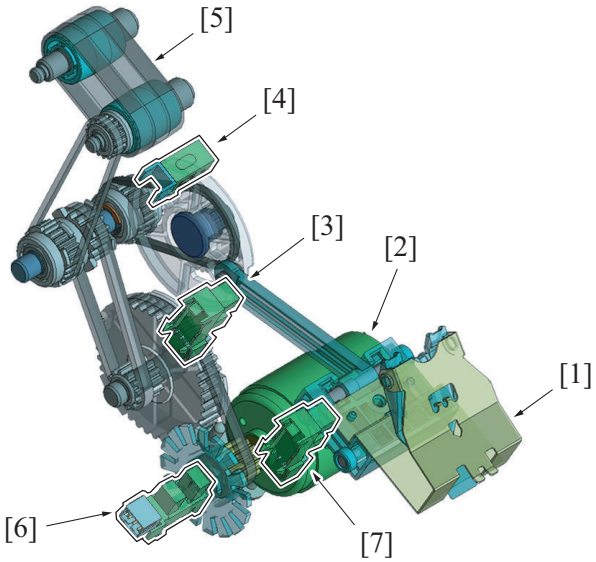

[1]	Trailing edge stopper/C	[2]	Pre-eject drive motor (M9)
[3]	Pre-eject away sensor (PS22)	[4]	Staple stacker paper detection sensor (PS31)
[5]	Lower paddle	[6]	Pre-eject encorder sensor (PS15)
[7]	Pre-eject home sensor (PS21)	-	-

(2) Gripper section

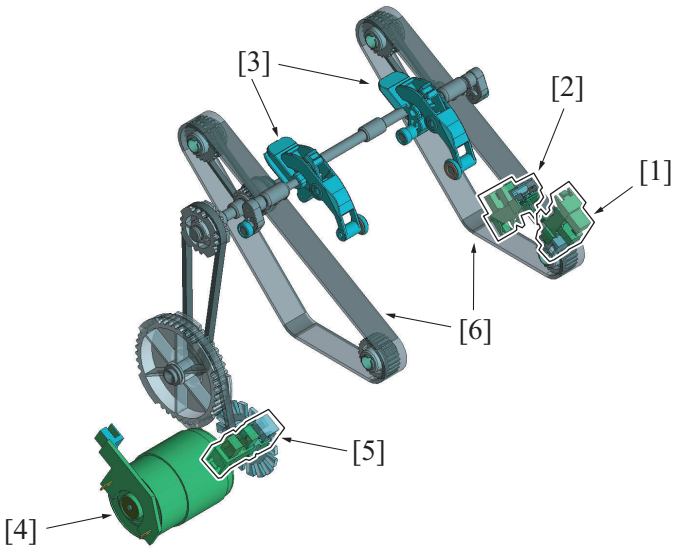

[1]	Gripper home position sensor (PS18)	[2]	Gripper position detection sensor (PS19)
[3]	Gripper	[4]	Bundle eject motor (M10)
[5]	Gripper motor sensor (PS17)	[6]	Paper transport belt

8.1.3 Stopper section (FD alignment section)

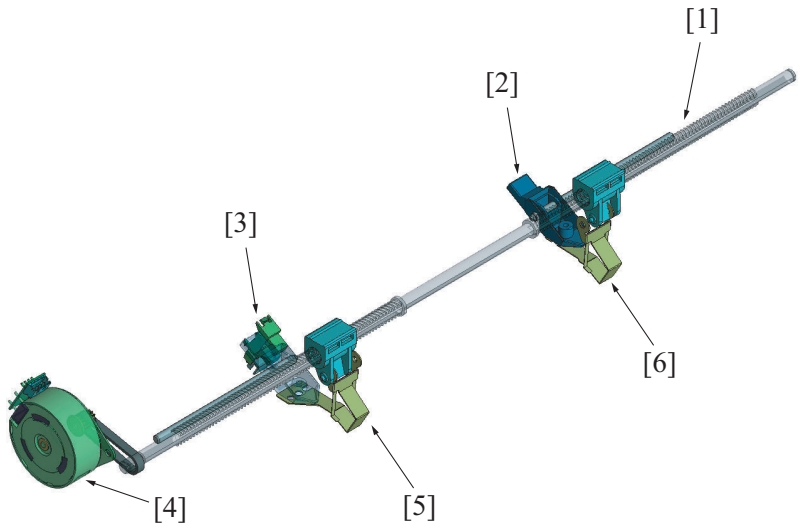

[1]	Stopper moving shaft	[2]	Holder
[3]	Trailing edge stopper home position detection sensor (PS20)	[4]	Trailing edge stopper motor (M6)
[5]	Trailing edge stopper/Fr	[6]	Trailing edge stopper /Rr

8.1.4 Alignment tray section (CD alignment section)

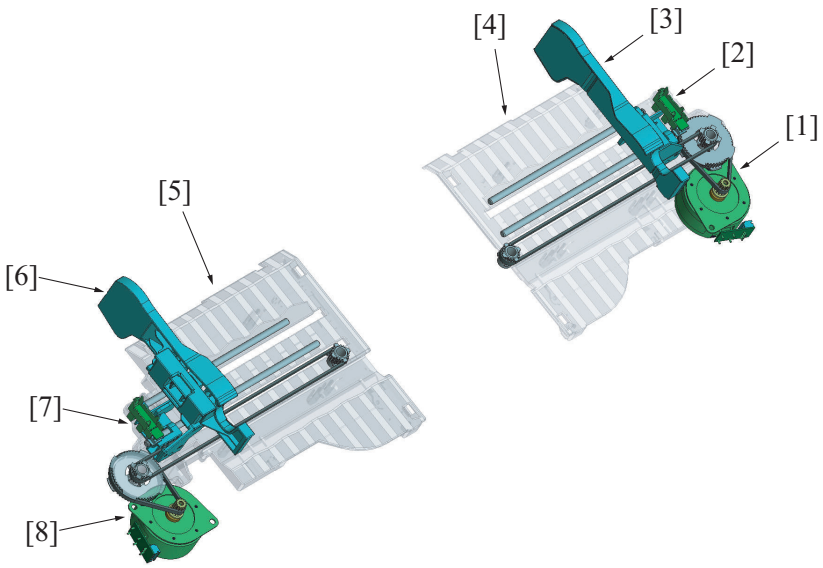

[1]	Alignment motor/Rear (M8)	[2]	Alignment plate/R home sensor (PS13)
[3]	Alignment plate/Rr	[4]	Alignment tray (rear)
[5]	Alignment tray (front)	[6]	Alignment plate /Fr
[7]	Alignment plate/F home sensor (PS12)	[8]	Alignment motor/Front (M7)

8.2 Drive

8.2.1 Drive outline

The driving source of the alignment section is the FNS paddle motor, pre-eject drive motor, bundle eject motor, trailing edge stopper motor, alignment motor, and the following parts are driven.

Driving source	Driving parts	Function
FNS paddle motor (M5)	Paper guide	Transports paper to the alignment tray.
	Upper paddle	Draws and drops paper to the alignment tray.
Pre-eject drive motor (M9)	Lower paddle	Presses paper against the stopper in the alignment tray.
	Trailing edge stopper/C	• Aligns the trailing edge of paper (Alignment operation in FD) • Pushes paper out to the main tray after alignment.
Bundle eject motor (M10)	Paper transport belt	Moves the gripper..
	Gripper	Grips the trailing edge of paper and delivers it to the main tray.
Trailing edge stopper motor (M6)	Trailing edge stopper /Fr	Moves the trailing edge stopper/Fr forward. It moves back and forth according to the paper width to keep the rear edge of the paper batch at the front side.
	Trailing edge stopper /Rr	Moves the trailing edge stopper/Rr backward. It moves back and forth according to the paper width to keep the rear edge of the paper batch at the back side.
Alignment motor/Front (M7)	Alignment plate/Fr	• Aligns both ends of paper (Alignment operation in CD) • Pushes paper to the front or rear. (Shift operation)
Alignment motor/Rear (M8)	Alignment plate/Rr	

8.2.2 Upper paddle section

- When the FNS paddle motor rotates, the upper paddles (3 pieces) located on the upper paddle shaft, rotates to draw and drop the paper to the alignment tray.
  - If sheets are not aligned, the upper paddles stay at the upper position (home position).
  - If sheets are aligned, the upper paddles rotate to draw and drop the sheets. After the paddles make a turn, they stay at the upper position (home position).
- The cam located on the upper paddle shaft rotates to move the paper guide up and down.
  - If sheets are not aligned, the paper guide stays at the upper position (home position).
  - If sheets are aligned, the paper guide moves down to guide the sheets to the alignment tray. When the cam makes a turn, the paper guide moves up to the upper position (home position) and stays at the position.

Front perspective view

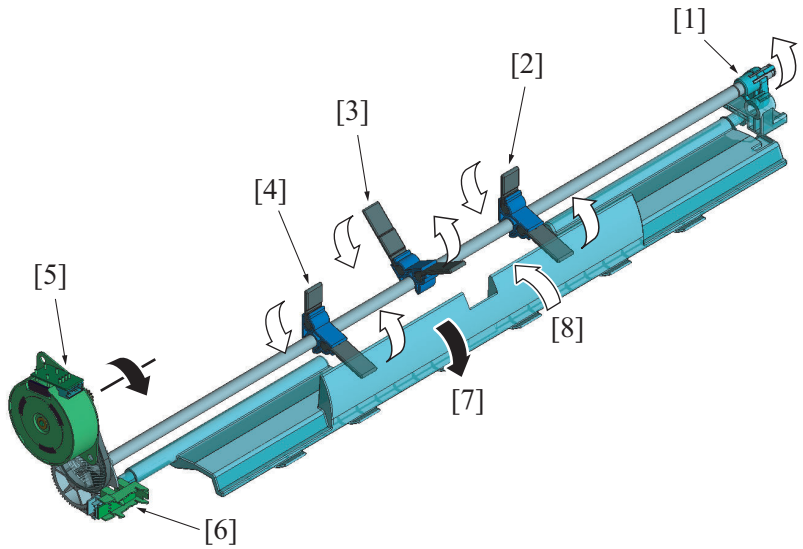

[1]	Cam	[2]	Upper paddle (rear)
[3]	Upper paddle (center)	[4]	Upper paddle (front)
[5]	FNS paddle motor (M5)	[6]	Upper paddle homeposition detection sensor (PS14)
[7]	Paper guide (move down)	[8]	Paper guide (move up)

Drive front view

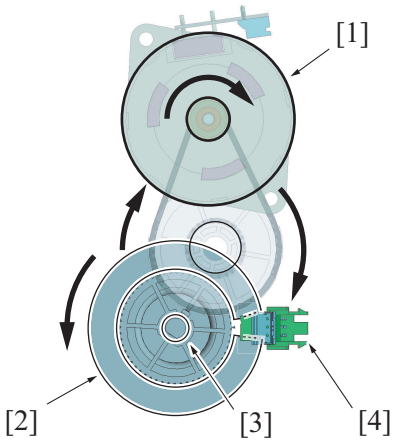

[1]	FNS paddle motor (M5)	[2]	Detection plate (home position)
[3]	Upper paddle turning shaft	[4]	Upper paddle homeposition detection sensor (PS14)

Upper paddle front view

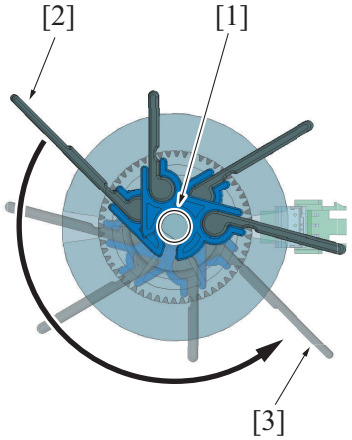

[1]	Upper paddle turning shaft	[2]	Upper paddle (upper position: home position)
[3]	Upper paddle (lower position: make a turn and return to home position.)	-	-

Paper guide front view

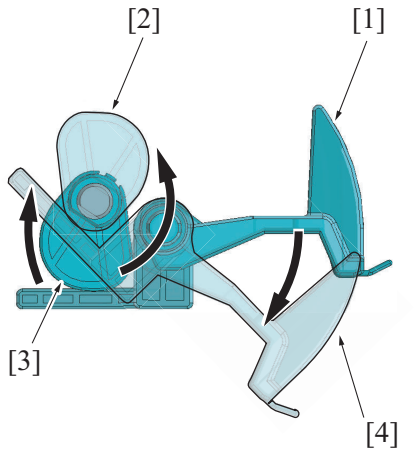

[1]	Paper guide (upper position: home position)	[2]	Cam (upper position)
[3]	Cam (lower position: home position)	[4]	Paper guide (lower position)

8.2.3 Exit section

- When the pre-eject drive motor rotates clockwise, the lower paddle rotates to press the paper against the trailing edge stopper.
- When the pre-eject drive motor rotates counterclockwise, the trailing edge stopper moves from the home position to the paper exit position to deliver paper to the main tray. When the drive gear makes a turn, the stopper moves from the paper exit position to the home position and is brought into a standby state.

Paper exit section: Front perspective view

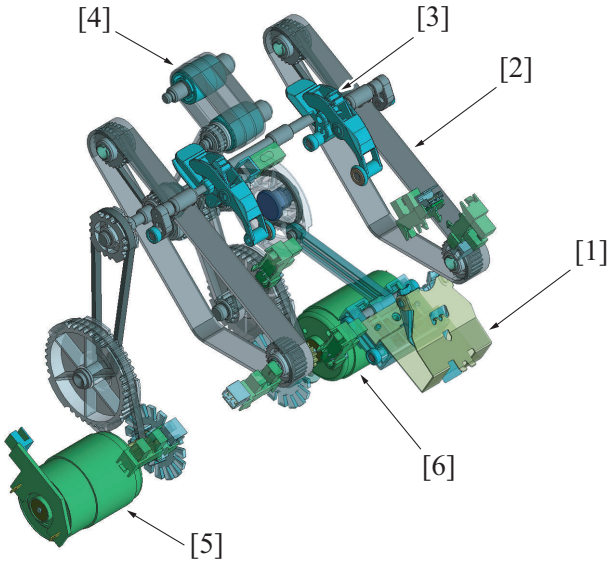

[1]	Trailing edge stopper/C	[2]	Paper transport belt
[3]	Gripper	[4]	Lower paddle
[5]	Bundle eject motor (M10)	[6]	Pre-eject drive motor (M9)

(1) Lower paddle section

Front perspective view

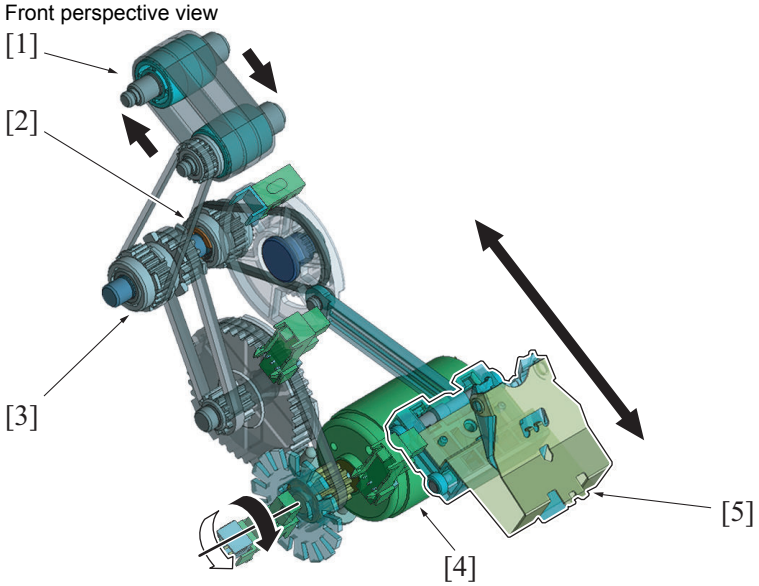

[1]	Lower paddle	[2]	One-way clutch (for trailing edge stopper/C driving)
[3]	One-way clutch (for stopper driving)	[4]	Pre-eject drive motor (M9)
[5]	Trailing edge stopper/C	-	-

Lower paddle drive front view

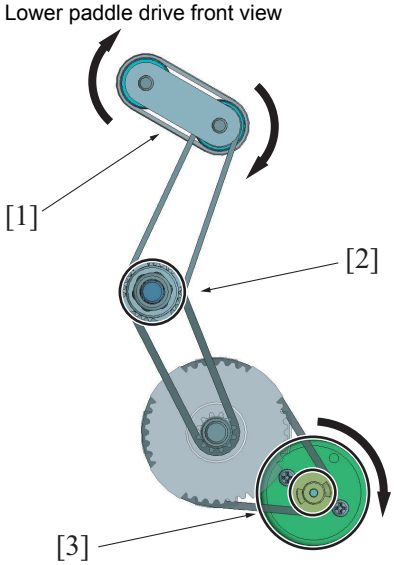

[1]	Lower paddle	[2]	One-way clutch (for lower paddle driving: transmit driving force only to clockwise rotation)
[3]	Pre-eject drive motor (M9): clockwise rotation	-	-

Trailing edge stopper/C drive front view

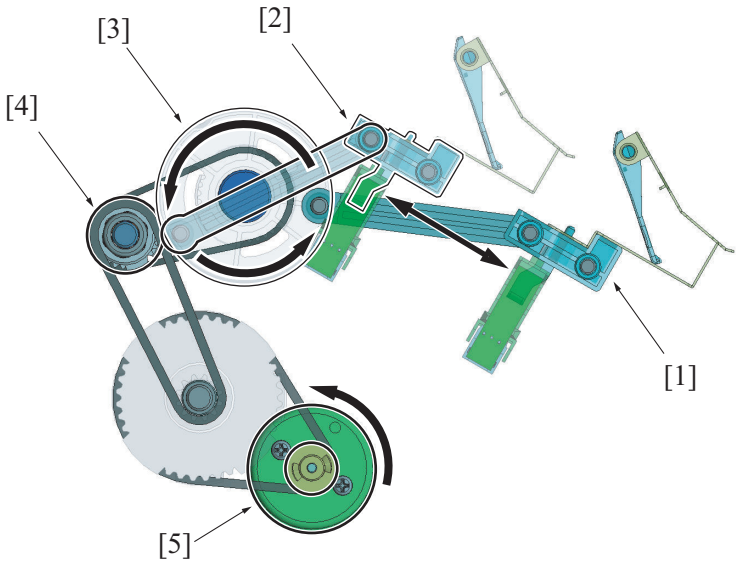

[1]	Trailing edge stopper/C (home position)	[2]	Trailing edge stopper/C (paper exit position)
[3]	Drive gear	[4]	One-way clutch (for trailing edge stopper driving: transmit driving force only to counterclockwise rotation)
[5]	Pre-eject drive motor (M9): counterclockwise rotation	-	-

(2) Gripper section

- The bundle eject motor rotates to turn the paper transport belt. This causes the gripper, fixed to the paper transport belt, to rotate.

Front perspective view

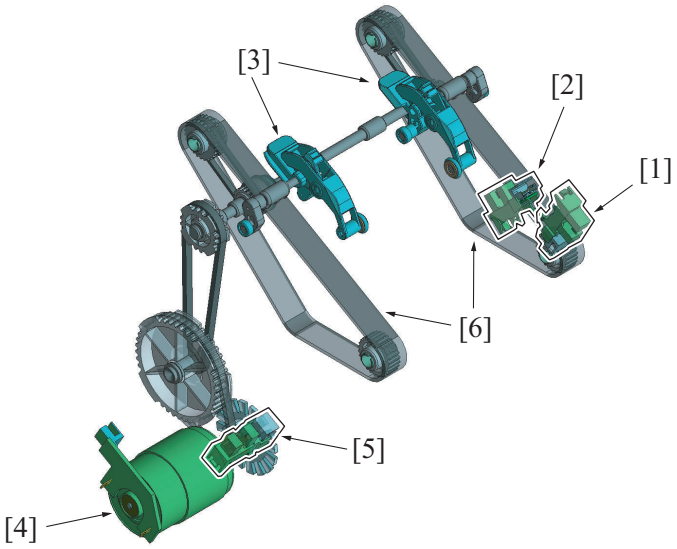

[1]	Gripper position detection sensor (PS19)	[2]	Gripper home position sensor (PS18)
[3]	Gripper	[4]	Bundle eject motor (M10)
[5]	Gripper motor sensor (PS17)	[6]	Paper drive belt

- The gripper stays at the home position (inside the exit section). It rotates at the position [1] shown in the illustration to grip the trailing edge of paper and transport the paper while keeping the state [2]. The gripper rotates at the position [3] in the illustration to release the paper. When the paper transport belt makes a turn, the gripper returns to the home position [5] and is brought into a standby state.

Gripper drive front view

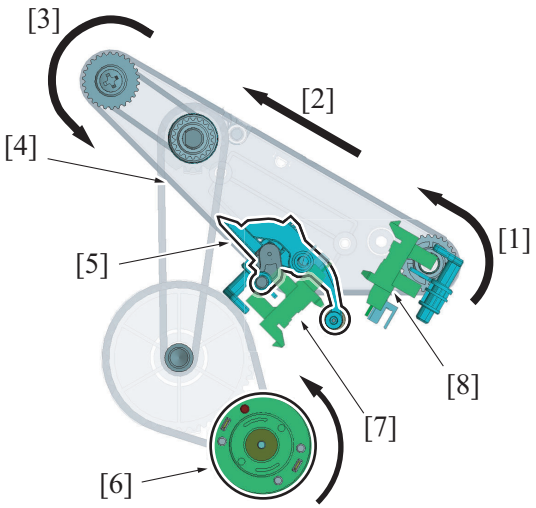

[1]	Gripper position (gripping the paper)	[2]	Gripper position (transporting the paper)
[3]	Gripper position (release the paper)	[4]	Paper transport belt
[5]	Gripper (home position)	[6]	Bundle eject motor (M10)
[7]	Gripper home position sensor (PS18)	[8]	Gripper position detection sensor (PS19)

8.2.4 Stopper section

- The shaft for stopper movement has a different spiral between the front and rear sides. This causes trailing edge stopper/Fr to move forward and trailing edge stopper/Rr to move backward when the trailing edge stopper motor rotates in the normal direction.
- Rear edge stopper/F and the rear edge stopper/R shift according to the paper width before starting a job, to hold the rear edge of the paper.
- For 2-point staple jobs, the trailing edge stoppers/Fr and /Rr are retracted to the position where they do not interfere with the stapler.
- After the job is completed, the trailing edge stopper motor reverses the rotation to return the trailing edge stopper to the home position.

Front perspective view

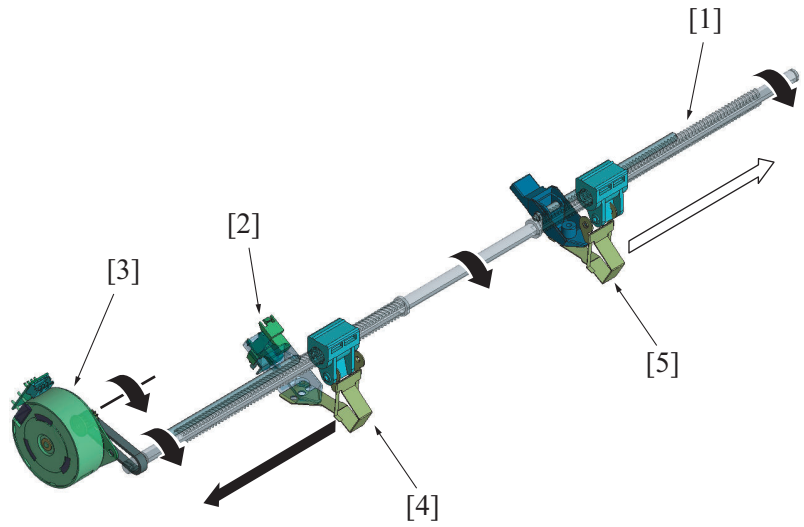

[1]	Stopper moving shaft	[2]	Trailing edge stopper home position detection sensor (PS20)
[3]	Trailing edge stopper motor (M6)	[4]	Trailing edge stopper/Fr: home position
[5]	Trailing edge stopper/Rr: home position	-	-

8.2.5 Alignment tray section

- The normal or reverse rotation of the alignment motor, allows the normal or reverse rotation of the drive belt. This causes the alignment plates to move forward or backward.
- Alignment plates/Fr and /Rr are each equipped with a drive motor, allowing them to operate independently. This enables paper alignment to the center, as well as paper shift to the front and rear.

Front perspective view

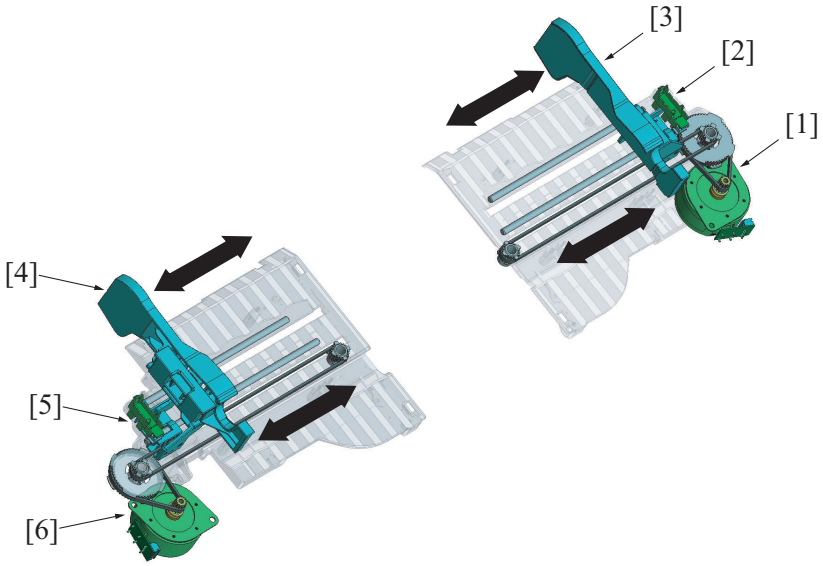

[1]	Alignment motor/Rear (M8)	[2]	Alignment plate/R home sensor (PS13)
[3]	Alignment plate /Rr: home position	[4]	Alignment plate /Fr: home position
[5]	Alignment plate/F home sensor (PS12)	[6]	Alignment motor/Front (M7)

8.3 Operation

8.3.1 Paper transport control in alignment section

Paper transported to the alignment section, is conveyed and aligned with the following operations.

1. The receiving roller in the transport section ejects paper *1.

   NOTE
   - ***1: For plain paper, due to buffer control, the first and second sheets of paper are ejected at the same time. For other than plain paper, the first paper is ejected.**
     For details of the buffer control, see "PG.7.3.3 Buffer control".
   - **The description below explains the paper transport control for plain paper.**

2. The alignment plates/Fr and /Rr are moved to the center.
3. The first and second sheets are transported onto the top of the alignment plates.

   NOTE
   - **This is to prevent the leading edge of the sheets from touching the lower paddle and being folded.**

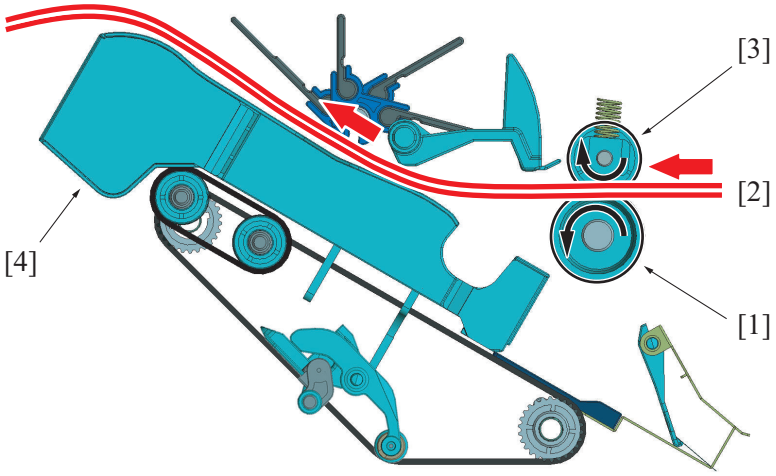

[1]	Receiving roller	[2]	First and second sheets (for plain paper)
[3]	Receiving roll	[4]	Alignment plate/Fr, Alignment plate/Rr (moved to the center)

4. The alignment plates return their home position. The alignment plate/F and the alignment plate/R shift to the waiting position according to the paper width immediately before the rear edge of the paper passes the receiving roller.
5. When the trailing edge of the sheet passes through the receiving roller, the paper guide is lowered to guide the trailing edge of the sheet to the alignment tray.
6. The upper paddle rotates, and the upper and lower paddles grip the sheet. The sheet is transported into the alignment tray. (Operation on switchback)
   The sheets are transported into the alignment tray and are stopped by the trailing edge stopper. (paper alignment operation in FD)

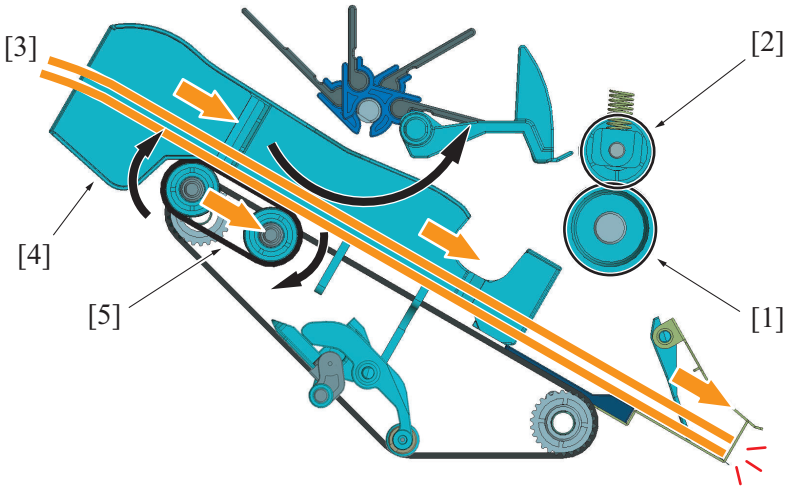

[1]	Receiving roller	[2]	Receiving roll
[3]	First and second sheets	[4]	Alignment plate/Fr, Alignment plate/Rr (Retracted to the home position)
[5]	Lower paddle (rotation)	-	-

7. The alignment plates move to align the ends of the sheets. (Paper alignment in CD)
   • The sheets are placed between the alignment plates/Fr and /Rr corresponding to the paper width so that their both ends are aligned.

Upper view

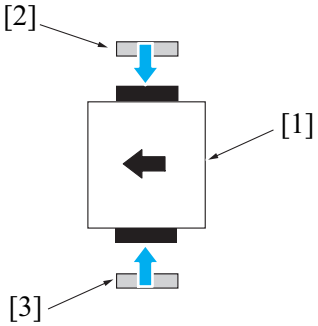

[1]	Paper	[2]	Alignment plate /Rr (moving forward to front side)
[3]	Alignment plate/Fr (moving backward to rear side)	-	-

• The alignment operations described above are performed for all sheets of paper in the job to align the ends of the sets of paper.

8. When offset is selected as finishing option, the alignment plates are moved to shift the sets of paper.
   - Depending on the width of paper, the alignment plate Fr or Rr pushes the sets of paper to the rear side (or to the front side) from one side so that the sets of the paper are shifted.

Upper view

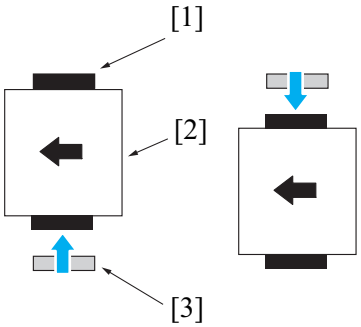

[1]	Alignment plate /Rr	[2]	Paper
[3]	Alignment plate /Fr	-	-

NOTE
- **The offset of paper (amount of shift) is 20 mm.**

   - The sheets are shifted by alternatively repeating the above operation.

9. The third sheet is ejected by the receiving roller of the transport section.

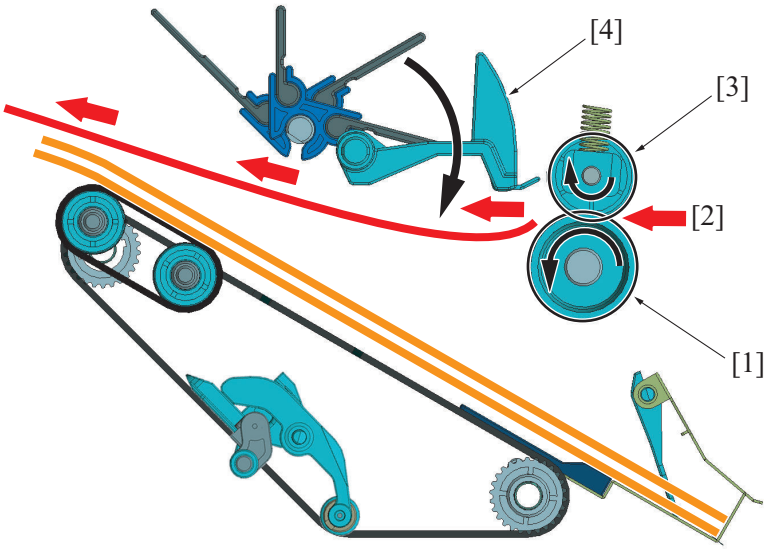

[1]	Receiving roller	[2]	Third sheet
[3]	Receiving roll	[4]	Paper guide (upper position)

10. When the trailing edge of the sheet passes through the receiving roller, the paper guide is lowered to guide the trailing edge of the sheet to the alignment tray.
11. The upper paddle rotates. The sheet is transported into the alignment tray. (Operation on switchback)

NOTE
- **When the switchback operation for the 3rd sheet or later, the lower paddle does not rotate.**

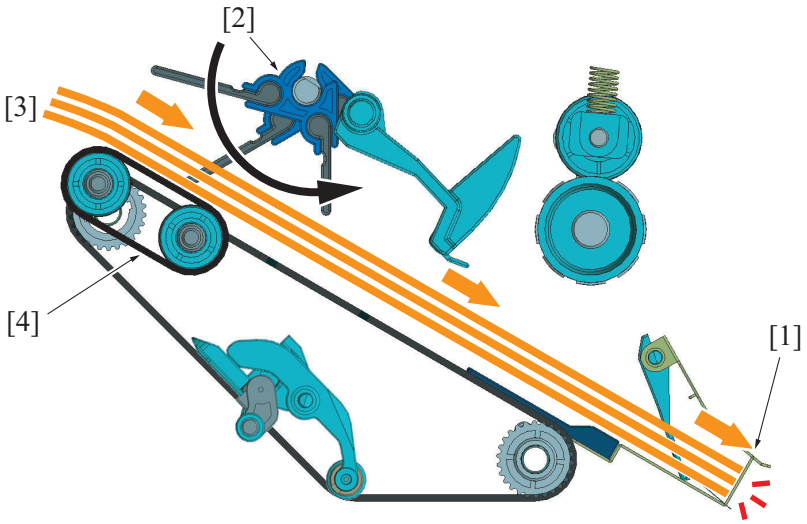

[1]	Trailing edge stopper	[2]	Upper paddle (rotation)

[3]	Paper	[4]	Lower paddle (rotation)

12. The sheet is stopped by the trailing edge stopper. This allows aligning the trailing edge of the sheets. (Paper alignment operation in FD)
13. The alignment plates move to align the ends of the sheets. (Paper alignment in CD)
NOTE
- **CD alignment operation is omitted since it is described in steps 7 to 8.**

14. For staple mode, the trailing edges of the sheets are stapled at this timing.
15. When all paper alignment is completed, the trailing edge stopper pushes the sheets to the position where the gripper can grip them.
16. The gripper grips the trailing edges of the sets of paper in the alignment tray and transports them to the paper exit position.

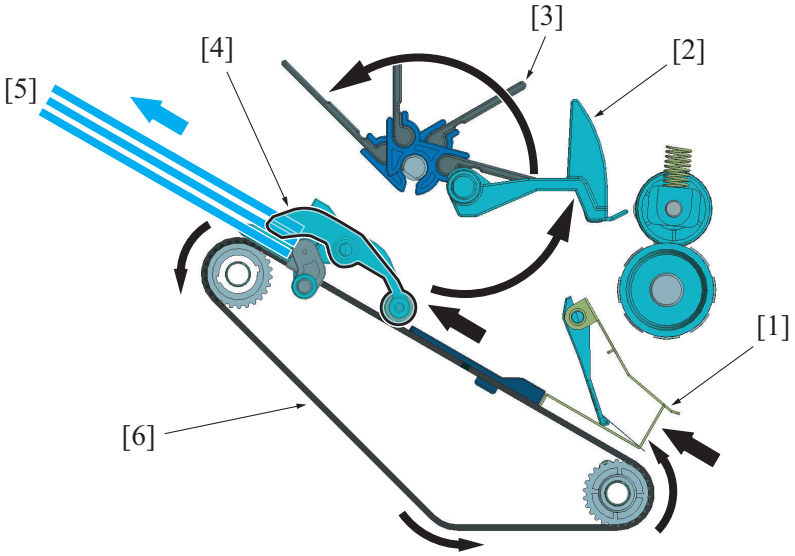

[1]	Trailing edge stopper/C (paper gripping position)	[2]	Paper guide (upper position: home position)
[3]	Upper paddle (upper position: home position)	[4]	Gripper (move)
[5]	Paper bunch	[6]	Paper transport belt (rotation)

17. The gripper releases the sets of paper to deliver them to the main tray. The gripper is moved to the home position and brought into a standby state.

9. STAPLER SECTION

9.1 Configuration/Drive

In the stapler section, staples are pressed through the sheets aligned in the alignment section so that the sheets are fastened together as a batch.

9.1.1 Configuration

Front perspective view

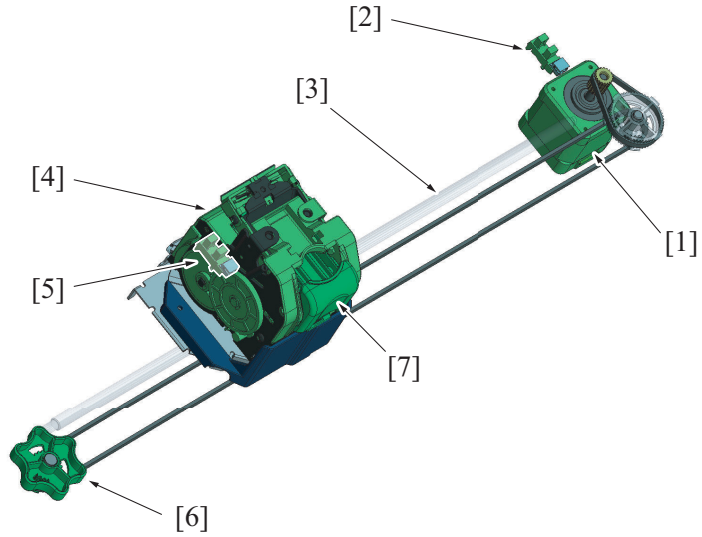

[1]	Side stapler movement motor (M13)	[2]	Stapler home position sensor (Rear) (PS23)
[3]	Shaft	[4]	Stapler unit
[5]	Stapler position sensor (Center) (PS24)	[6]	Stapler move dial
[7]	Staple cartridge	-	-

Front view

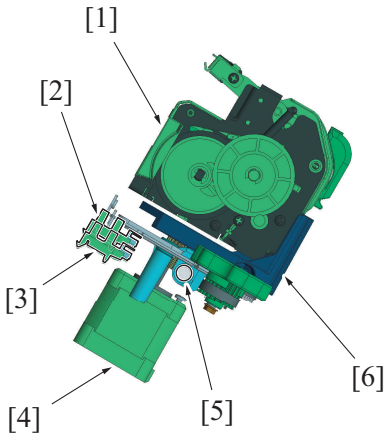

[1]	Stapler unit	[2]	Stapler home position sensor (Rear) (PS23)
[3]	Stapler position sensor (Center) (PS24)	[4]	Side stapler movement motor (M13)
[5]	Shaft	[6]	Stapler holder

9.1.2 Drive

- The driving source of the staple section is the side stapler movement motors, stapler motor built into the staple unit, and the following parts are driven.

Driving source	Driving parts	Function
Side stapler movement motor (M13)	Staple cartridge	Back and forth movement and rotation of the stapler unit
Stapler	Clincher staple arm	Fastening of sheets with staples

- When the side stapler movement motor rotates, the belt is driven by the belt and the stapler holder attached to the belt moves back and forth along the shaft.
- When the stapler unit moves to the stapler home position, the staple cartridge replacement or the corner staple position, the shape of the slide guide plate causes the stapler unit to rotate.

NOTE

- **The stapler unit is rotated at the staple cartridge replacement position to ease replacement work.**

Upper view

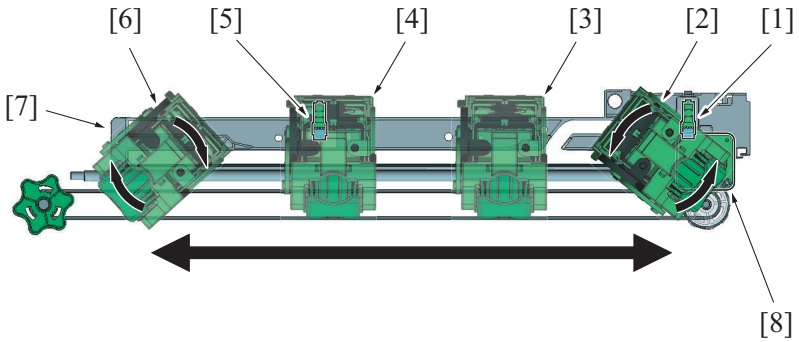

[1]	Stapler home position sensor (Rear) (PS23)	[2]	Stapler unit (home position)
[3]	Stapler unit (2-staple position)	[4]	Stapler unit (2-staple position)
[5]	Stapler position sensor (Center) (PS24)	[6]	Stapler unit (staple cartridge replacement position)
[7]	Slide glass plate	[8]	Side stapler movement motor (M13)

9.2 Operation

9.2.1 Stapler positioning control

(1) Stapler home position detection control

- The stapler home position sensor (rear) detects the stapler home position. The stapler's staple position is detected by the amount of motor rotation provided by the stapler home position sensor (rear) and stapler position sensor (center).
- In the corner staple mode, the stapler moves to the corner staple position and staples paper.
- In the 2-staple mode, the stapler moves to the 2-staple position (rear) and staples paper. Then it moves to the next 2-staple position (front) and staples the paper. After the stapling operation is completed, the stapler returns to the home position.

Upper view

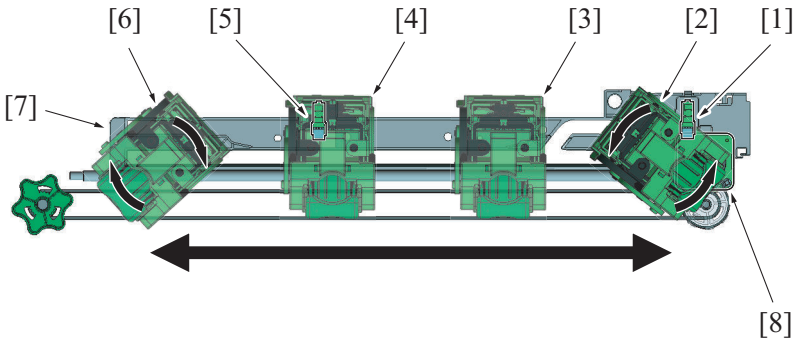

[1]	Stapler home position sensor (Rear) (PS23)	[2]	Stapler unit (home position)
[3]	Stapler unit (2-staple position: rear)	[4]	Stapler unit (2-staple position: front)
[5]	Stapler position sensor (Center) (PS24)	[6]	Stapler unit (staple cartridge replacement position)
[7]	Slide guide plate	[8]	Side stapler movement motor (M13)

(2) Staple cartridge replacement position detection control

- The stapler position sensor (center) detects the staple cartridge replacement position. (The stapler determines that it arrives at the replacement position based on how much the side stapler movement motor rotates after the stapler passes the stapler position sensor (center).
- In the corner staple mode, the stapler moves to the staple cartridge replacement position, rotates, and stays at the position. When alignment of sheets is completed, the sheets are stapled. After they are stapled, the stapler returns to the home position.
- When staple empty is detected, the stapler unit moves to the staple cartridge replacement position, rotates, and stays at the position.
- User can replace the staple cartridge by opening the front door.
  NOTE
  - **Using the stapler move dial, user can replace the staple cartridge without moving the stapler unit.**
- When staple cartridge replacement is completed and the front door is closed, the stapler returns to the home position.

9.2.2 Stapling control

(1) Stapling operation

- Stapling operation is driven by the stapler motor.
- In the stapling operation, the clincher staple arm is lowered by the stapler motor. The clincher staple arm presses the sheets. (This is called clamp operation.) Then a staple is pushed up by the staple arm from the stapler side. The staple is pressed through the sheets and bent from the clincher staple arm side so that the sheets are fastened together. Then the stapler motor lifts the clincher staple arm and lowers the staple arm to complete the stapling operation.
- The number of sheets that the user wishes to staple are placed into the alignment tray and the stapling operation is performed. However, if the number exceeds the upper limit, the set of sheets is delivered to the exit tray without being stapled.

Type	Basis weight	No. of sheets to be stapled	Max. capacity (Number of stacked sheets / Height of stacked sheets)*	
			• A4S or less • 8 1/2 x 11S or less	• B4 or greater • 8 1/2 x 14 or greater
• Thin paper • Plain paper • Recycled paper	52 to 90 g/m^2	2 sheets to 9sheets	100 copies /375mm	100 copies / 187.5mm
		10 sheets to 20 sheets	50 copies / 375mm	50 copies / 187.5mm
		21 sheets to 30 sheets	30 copies / 375mm	30 copies / 187.5mm
		31 sheets to 40 sheets	25 copies / 375mm	25 copies / 187.5mm
		41 sheets or greater	20 copies / 375mm	20 copies / 187.5mm
Thick 1	91 to 120 g/m^2	30 sheets or less	20 copies / 375mm	20 copies / 187.5mm
Thick 1+	121 to 157 g/m^2	15 sheets or less	20 copies / 375mm	20 copies / 375mm
Thick 2	158 to 209 g/m^2	15 sheets or less	20 copies / 375mm	20 copies / 375mm
Thick 3	210 to 256 g/m^2	-	-	-
Thick 4	257 to 300 g/m^2			

- For details on the specifications, refer to C.9.3.3 Sort staple.

Overall view

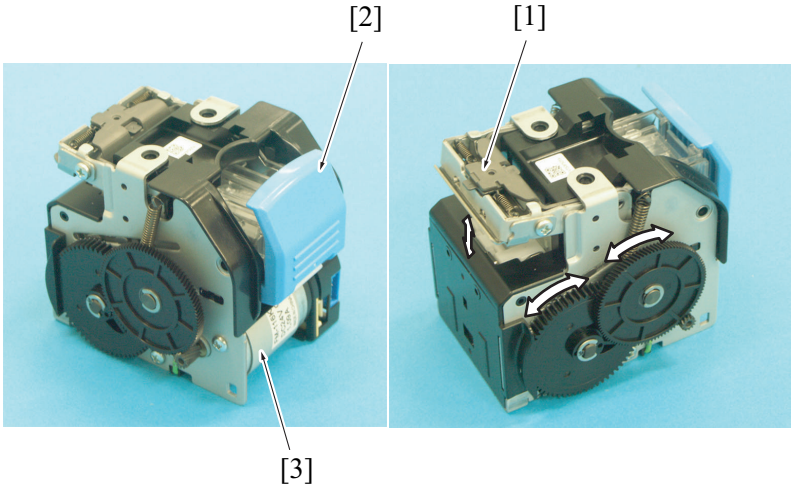

[1]	Clincher staple arm	[2]	Staple cartridge
[3]	Stapler motor	-	-

Front view

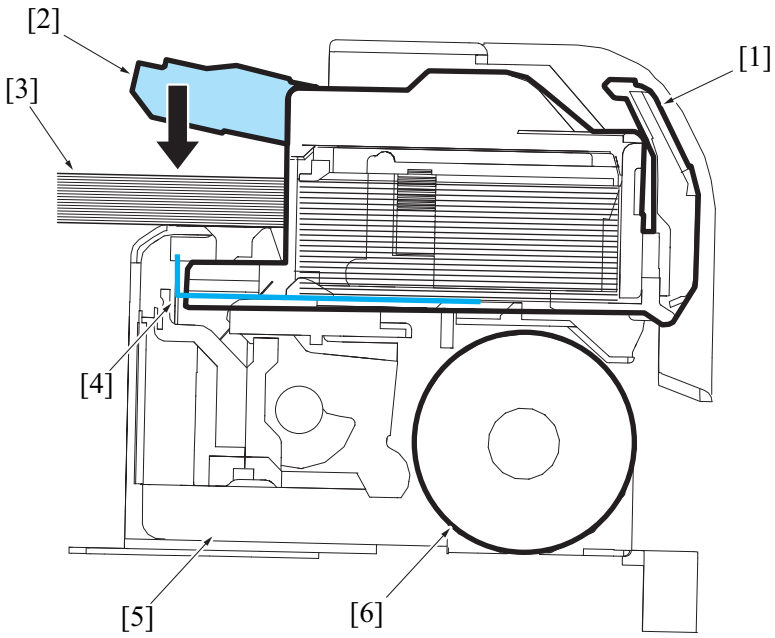

[1]	Staple cartridge	[2]	Clincher staple arm
[3]	Paper bunch	[4]	Staple sheet (staple)

[5]	Stapler	[6]	Stapler motor (M14)

9.2.3 Staple empty detection control

(1) Staple cartridge

- The stapler is provided with the staple cartridge used only for the stapler.
- To supply staples, the staple cartridge is loaded with staples (staple sheet type: 5000 staples) and then the stapler is loaded with the cartridge.
  For information on how to load staplers, refer to the user's guide.

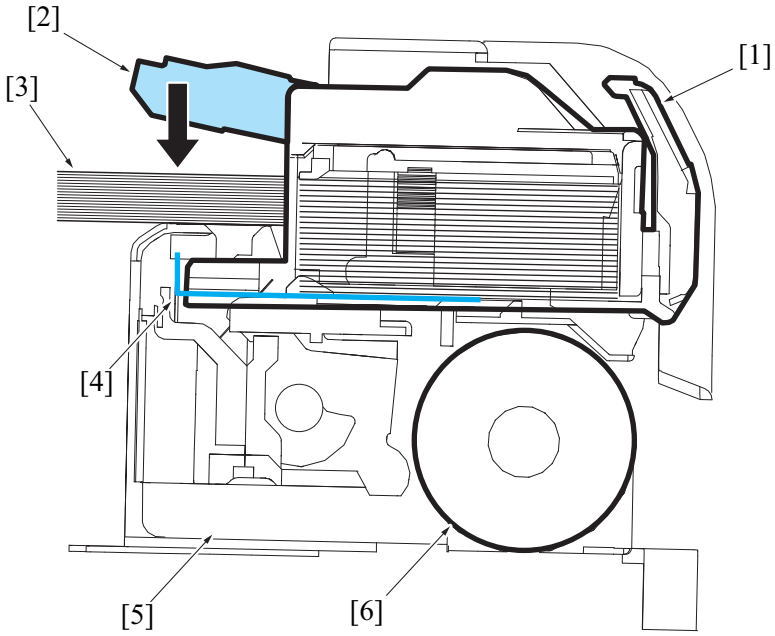

[1]	Staple cartridge	[2]	Clincher staple arm
[3]	Paper bunch	[4]	Stapler sheet (Staple)
[5]	Stapler	[6]	Stapler motor

(2) Staple empty detection mechanism

- The stapler includes the self-priming sensor and staple empty sensor to detect the status of the staple cartridge and staples.
- The staple cartridge is loaded with staple sheets, and a staple sheet is conveyed to the clinch position (staple position) from the lowest one.

State where staple sheets are loaded

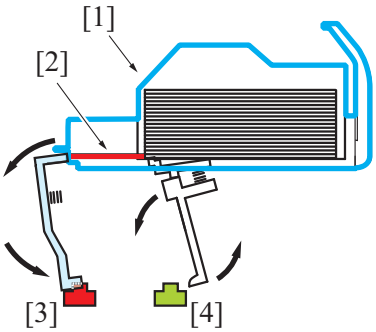

[1]	Staple cartridge (loaded with staple sheets)	[2]	Staple sheet fed from the cartridge
[3]	Self-priming sensor (blocked)	[4]	Staple empty sensor (unblocked)

- While the staple cartridge is loaded, if the trailing edge of the last staple sheet in the cartridge passes the actuator of the staple empty sensor, the actuator is raised by the spring force.
- When the actuator is raised, the staple empty sensor is blocked and machine determines that the cartridge is empty. The control panel displays the staple empty message.

State where the last staple sheet is fed

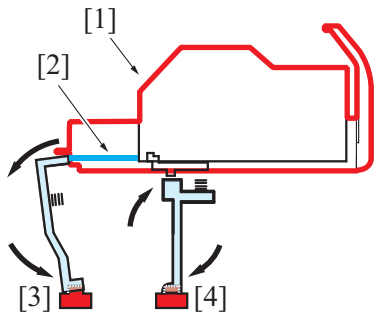

[1]	Staple cartridge (staple empty)	[2]	Staple sheet (remainder)
[3]	Self-priming sensor (blocked)	[4]	Staple empty sensor (blocked)

State where staple sheet runs out

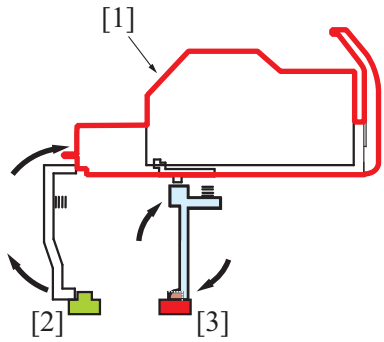

[1]	Staple cartridge (empty)	[2]	Self-priming sensor (unblocked)
[3]	Staple empty sensor (blocked)	-	-

- Even when the staple empty sensor detects the trailing edge of the last staple sheet, the staple sheet (staples: about 20) fed from the cartridge remains at the cartridge's front section. In this case, the actuator of the self-priming sensor is pressed down by the leading edge of the staple sheet.
- If the actuator is pressed down, the self-priming sensor is blocked and machine determines that the staple sheet is fed to the clinch position (staple position).
- Even when staple empty is detected, printing is not disabled. Paper is delivered without being stapled.
- After staple empty is detected, when the staple cartridge is loaded with staple sheets and the stapler is loaded with the cartridge, the actuator of the staple empty sensor is pressed down by the staple sheets.
- When the actuator is pressed down, the staple empty sensor is unblocked and staple empty condition is cleared. At this point, the staple empty sensor detects the staple sheets (unblocked). However, if the leading edge of the staple sheet cannot be detected by the self-priming sensor (unblocked), the clinch operation is repeated up to 20 times to feed the leading edge of the staple sheet to the position (clinch position) where it can be detected by the self-priming sensor.

State where staple sheet is not fed

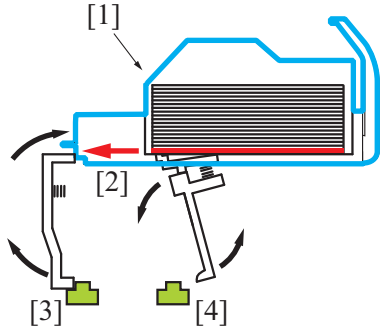

[1]	Staple cartridge (loaded with staple sheets)	[2]	Staple sheet is fed by clinch operation.
[3]	Self-priming sensor (unblocked)	[4]	Staple empty sensor (unblocked)

- If the self-priming sensor cannot detect the leading edge of the staple sheet after clinch operations, machine determines that the staple sheet is not properly fed (staple sheet is not properly set) and the control panel displays the staple empty message.
- If the staple empty message appears even after staple sheets are loaded, check whether the staple sheets is properly set in the staple cartridge. If the cartridge is clogged with a staple sheet, clear the sheet.
- If staple empty occurs, the stapler stays at the staple cartridge replacement position (position where staples can be supplied only by opening the front door).

(a) When the staple cartridge is not loaded

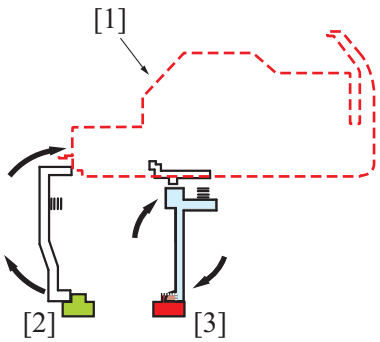

[1]	Staple cartridge (not mounted)	[2]	Self-priming sensor (unblocked)
[3]	Staple empty sensor (blocked)	-	-

- The actuator of the staple empty sensor is raised by the spring force. The staple empty sensor is blocked.
- The actuator of the self-priming sensor is raised by the spring force. The sub priming sensor is unblocked.
- MFP determines that the cartridge is empty and the control panel displays the staple empty message.

9.2.4 Clogged staple detection control

- Stapling operation is performed by lowering of the clincher staple arm and lifting of the staple arm.
- The staple arm position is detected by the staple home sensor located in the stapler.
- The stapler determines that the stapling operation is completed if the staple arm returns to the home position within the specified time after the stapling operation. If the staple arm does not return to the home position after the specified time has passed, the machine determines that staple trouble has occurred and an error message appears on the control panel.

10. RECEIVING SECTION

10.1 Configuration

10.1.1 Configuration outline

In the receiving section, paper transported into the finisher is placed into each tray.

- Main tray:
  - Paper is aligned in the alignment section.
  - The tray's up/down mechanism moves the tray down depending on the amount of paper loaded, so that a large capacity of paper can be placed. The tray also includes the mechanism for detecting the amount of loaded paper.
  - The number of sheets that can be placed on the tray changes depending on whether the saddle stitcher SD-511 is installed or not.

State	Capacity
Standard (Saddle stitcher is not mounted)	3,000 sheets (in the case of plain paper of which size is A4S or smaller) or up to 375 mm *1 in height of stacked paper
Saddle stitcher is mounted	2,000 sheets (in the case of plain paper of which size is A4S or smaller) or up to 250 mm *1 in height of stacked paper

    - *1: If either the number or height of stacked sheets reaches the specified value, "Tray paper full" is determined.
    - For details on the specifications, refer to C.9. FS-534.
- Sub tray:
  - Paper that does not pass the alignment section is transported to the tray.
  - The tray is a fixed type without the up/down mechanism. The tray includes the mechanism for detecting the amount of loaded paper.

Paper	Capacity
Plain paper (less than A4S size)	200 sheets or up to 35 mm *1 in height of stacked paper

    - *1: If either the number or height of stacked sheets reaches the specified value, "Tray paper full" is determined.
    - For details on the specifications, refer to C.9. FS-534.
- 3rd tray:
  - It receives the paper transported from the exit section of the MFP main body.
  - The upper part of the RU section door can be used as the exit tray. The tray includes the mechanism for detecting the amount of loaded paper.

Paper	Capacity
Plain paper (less than A4S size)	100 sheets or up to 22.5 mm *1 in height of stacked paper

    - *1: If either the number or height of stacked sheets reaches the specified value, "Tray paper full" is determined.
    - For details on the specifications, refer to C.9. FS-534.
- Saddle tray:
  - Paper center-stapled in the saddle section is placed in the tray.
  - The tray is a fixed type without the up/down mechanism. The tray does not have the sensor for detecting the amount of loaded paper. (To detect paper full, the number of sets delivered to the tray is counted.)

No. of sheets to center staple/center folding (Plain paper (less than A4S size))	Capacity
1 to 3 sheets	20 copies
4 to 10 sheets	10 copies
11 to 20 sheets	5 copies

    - For details on the specifications, refer to C.12. SD-511.

Overall: Front perspective view

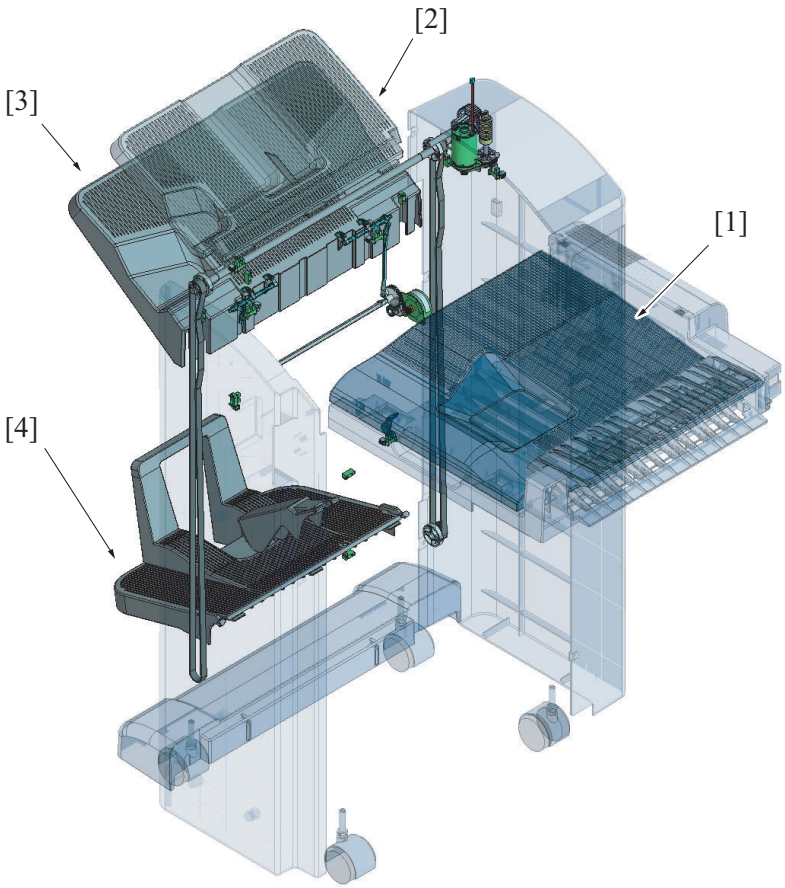

[1]	3rd tray (RU section upper position)*1	[2]	Sub tray
[3]	Main tray	[4]	Saddle tray

10.1.2 Main tray

Main tray section: Front perspective view

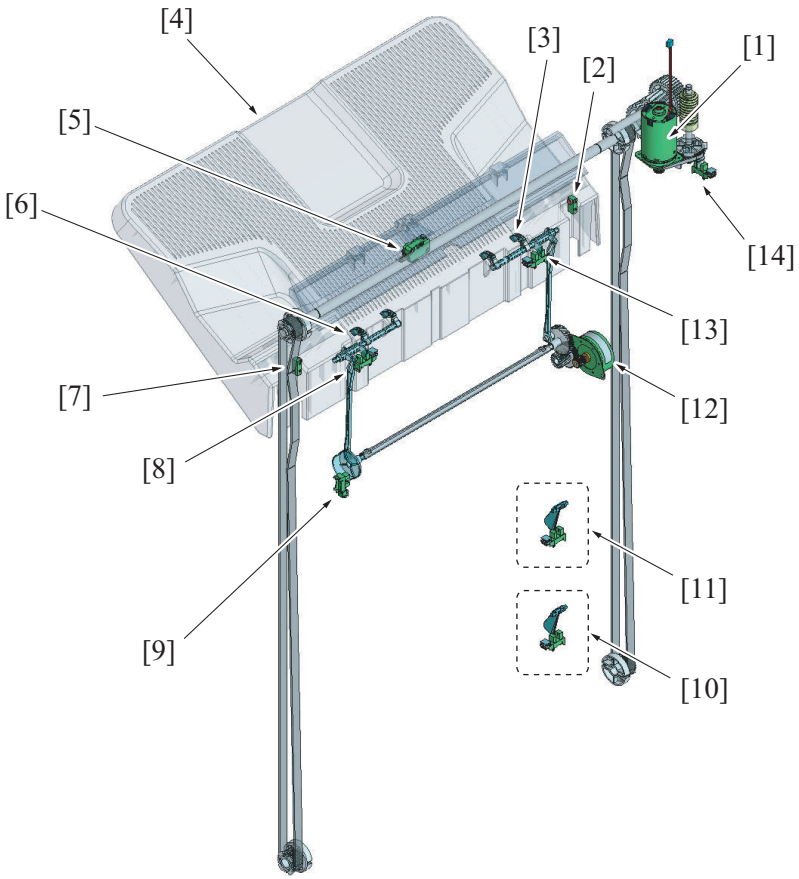

[1]	Main tray up/down motor (M11)	[2]	Main tray upper sensor/out (PS6)
[3]	Paper detection lever/Rr	[4]	Main tray
[5]	Main tray upper position detect switch (SW2)	[6]	Paper detection lever/Fr
[7]	Main tray upper sensor (PS7)	[8]	Main tray upper position sensor/F (PS27)
[9]	Paper delivery control sensor (PS28)	[10]	Main tray full detection sensor (PS29) *1
[11]	Main tray full detection sensor (PS29) *2	[12]	Paper receiving control motor (M12)
[13]	Main tray upper position sensor/R (PS26)	[14]	Stacker motor sensor (PS25)

- *1: Sensor mounted position when the saddle stitcher is not installed.
- *2: Sensor mounted position when the saddle stitcher is installed. By adding the saddle stitcher, the sensor position is changed.

10.1.3 Sub tray

NOTE

- **For configurations of the paper transport path to the sub tray, refer to PG.7.1.1 Paper feed section - sub tray section.**

Sub tray section Front perspective view

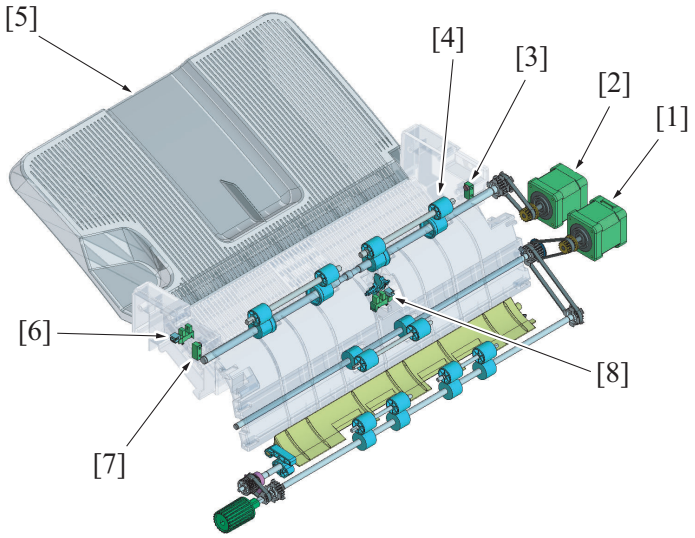

[1]	FNS entry transport motor (M2)	[2]	FNS discharge motor (M3)
[3]	Sub tray full detection sensor/out (PS9)	[4]	Sub tray section exit roller
[5]	Sub tray	[6]	Upper cover open/close detection sensor (PS32)
[7]	Sub tray full detection sensor/in (PS10)	[8]	Sub tray exit sensor (PS8)

10.1.4 3rd tray

NOTE

- **For configurations of the paper transport path to the 3rd tray, refer to O.15.1 Configuration.**

3rd tray section Front perspective view

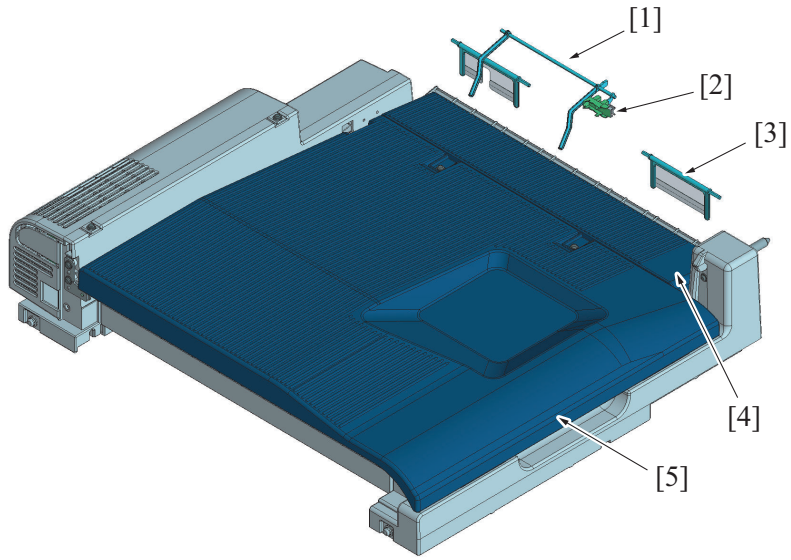

[1]	3rd exit tray full detection actuator	[2]	3rd exit tray full sensor (PS1)
[3]	Paper discharge control	[4]	Paper feed guide plate
[5]	3rd tray (RU section door)	-	-

10.1.5 Saddle tray

NOTE

- **For configurations of the paper transport path to the saddle tray, refer to PG.11.1 Configuration.**

Saddle tray section: Perspective view

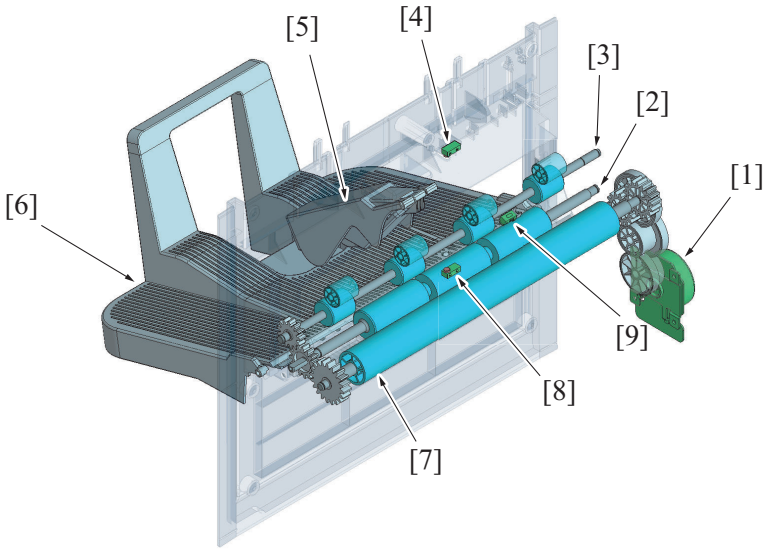

[1]	Center fold roller motor (M5)	[2]	Tri-folding roller
[3]	Saddler section exit roller	[4]	Booklet tray empty detection sensor/in (PS13)
[5]	Paper press	[6]	Saddle tray
[7]	Center folding roller/2	[8]	Booklet tray empty detection sensor/out (PS14)
[9]	Fold exit sensor (PS12)	-	-

10.2 Drive

The driving source of the main tray section is the main tray up/down motor and the paper receiving control motor, and the following parts are driven.

Driving source	Driving parts	Function
Main tray up/down motor (M11)	Main tray	• Normal rotation: The main tray is lowered depending on the number of sheets delivered into the main tray. • Reverse rotation: After paper is removed, the main tray is lifted to the home position.
Paper receiving control motor (M12)	Paper detection lever	The height of stacked paper (amount of stacked paper) delivered to the main tray is detected.

10.2.1 Main tray section

Front perspective view

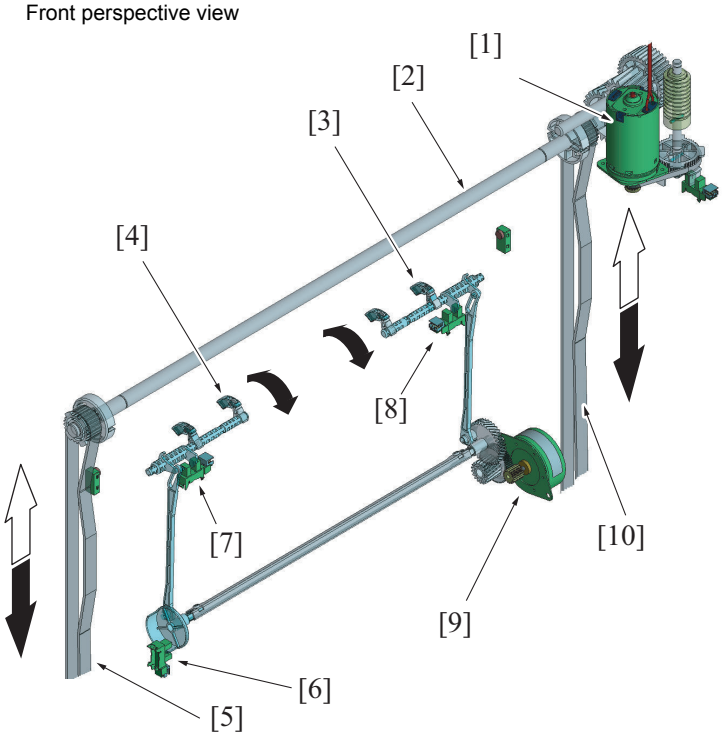

[1]	Main tray up/down motor (M11)	[2]	Main tray driving shaft
[3]	Paper detection lever/Rr	[4]	Paper detection lever/Fr
[5]	Main tray drive belt/Fr	[6]	Paper delivery control sensor (PS28)
[7]	Main tray upper position sensor/F (PS27)	[8]	Main tray upper position sensor/R (PS26)
[9]	Paper receiving control motor (M12)	[10]	Main tray drive belt/Rr

Front view

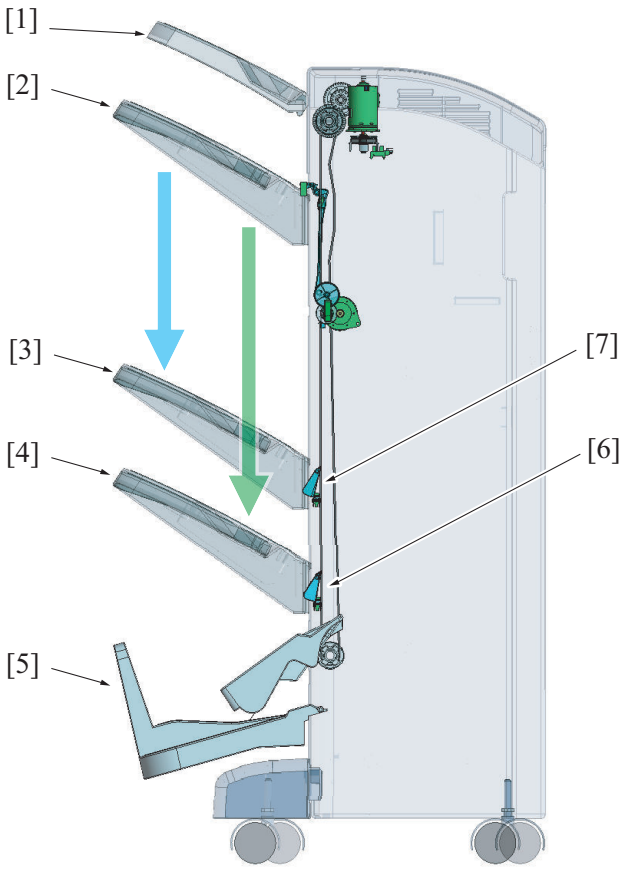

[1]	Sub tray	[2]	Main tray (home position)
[3]	Main tray (main tray full position) *1	[4]	Main tray (main tray full position) *2
[5]	Saddle tray	[6]	Main tray full detection sensor (PS29) *2
[7]	Main tray full detection sensor (PS29) *1	-	-

- *1: Saddle stitcher is mounted
- *2: Standard

(1) Mechanism for protecting main tray drive section

CAUTION

- When the drive connection in the torque limiter is released, the main tray moves down under its own weight.
- To avoid finisher breakage and your injury, before releasing the drive connection in the torque limiter, be sure to support the main tray with your hand.

- The drive connection section of the main tray up/down drive mechanism has a torque limiter to prevent breakage.
- There may be an obstacle below the main tray during its downward movement. If the tray touches the obstacle and the force required to stop the lowering operation exceeds the specified value, the teeth of the drive gear rotates in the reverse direction and the driving force cannot be transmitted to the main tray. The torque limiter is used to prevent this situation from causing the breakage of the main tray drive mechanism and the main tray up/down motor.
- The main tray can be moved only upward with your hands. By manually pushing it upward with the force exceeding the specified value, the main tray can be raised. In contrast, as the torque limiter is not provided for the downward movement, the main tray cannot be lowered by pushing it down. If the tray is forcibly pushed downward, the main tray drive mechanism can be damaged.
- If the main tray needs to be manually lowered for maintenance and repair, the tray can be lowered by releasing the drive connection in the torque limiter.

Front perspective view

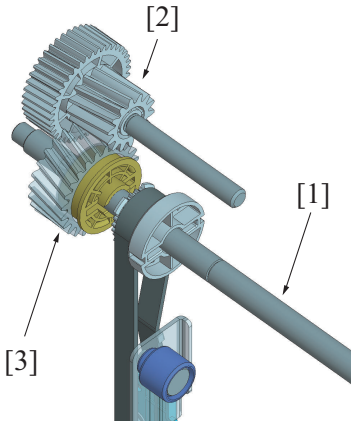

[1]	Main tray driving shaft	[2]	Main tray up/down motor drive connecting gear
[3]	Torque limiter	-	-

Method for releasing the drive connection

1. Remove the rear cover.
2. Support the main tray with your hand so that it does not fall down.
3. Slide the area of the torque limiter, located on the main tray driving shaft, as shown to the front side of the main unit. The connection of the drive gears is released and the main tray is lowered.

Side view

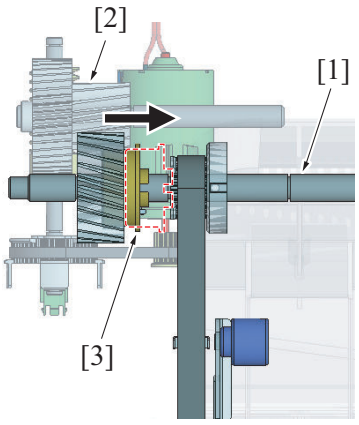

[1]	Main tray driving shaft	[2]	Main tray up/down motor drive connecting gear
[3]	Torque limiter	-	-

10.2.2 Sub tray section

NOTE

- **For information on the drive in the sub tray (between transport section and sub tray section), refer to PG.7.2 Drive in the transport section.**

10.2.3 3re tray section

NOTE

- **The 3rd tray does not have drive parts which requires drives source such as drive motor.**

10.2.4 Saddle tray section

NOTE

- **For information on the drive in the sub tray (between transport section and sub tray section), refer to PG.11.2.1 Drive in the transport section.**

10.3 Operation

10.3.1 Sub tray exit mechanism

- Paper transported from the RU section is delivered to the sub tray by the sub tray exit roller via the FNS paper feed roller, FNS transport roller, and sub tray vertical transport roller.
- To transport paper to the sub tray, the paper path switching gate also operates.
- The sub tray exit roller is driven by the FNS discharge motor.

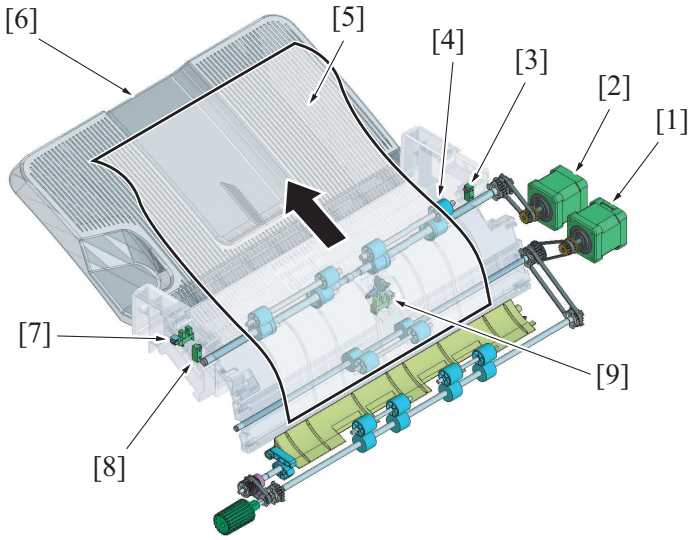

[1]	FNS entry transport motor (M2)	[2]	FNS discharge motor (M3)
[3]	Sub tray full detection sensor/out (PS9)	[4]	Sub tray section exit roller
[5]	Paper	[6]	Sub tray
[7]	Upper cover open/close detection sensor (PS32)	[8]	Sub tray full detection sensor (PS10)
[9]	Sub tray exit sensor (PS8)	-	-

10.3.2 Main tray paper level detection control

- The height of paper stacked on the main tray is always controlled to the specified level, by lowering the main tray depending on the amount of paper delivered to the tray.
- The paper level is detected by the main tray upper position sensors/Fr and /Rr. Based on the detection results, the main tray height is controlled.
- The top end of the paper detection lever is lifted when the paper detection lever drive gear makes a half-turn. When the paper receiving control motor makes another half-turn, the end of the lever presses down the top of the trailing edge of the paper stacked on the main tray. Depending on the number of the sheets stacked or the height of the exit tray, the position of the paper detection lever changes.
- When the paper detection lever is at the home position, the main tray upper position sensor is unblocked. When the top end of the lever is lifted, the main tray upper position sensor is blocked. If the amount of stacked paper increases while the end of the lever presses down the top of the trailing edge of the paper stacked on the main tray, the paper detection lever becomes unable to return to the home position and the main tray upper position sensor is blocked. This causes machine to determine that the height of stacked paper exceeds the specified height. In this case, the main tray up/down motor is rotated and the main tray is lowered until the main tray upper position sensor is unblocked. When the main tray is lowered to the main tray full detection sensor, MFP determines that the main tray is full and the control panel displays the main tray full message.
- When main tray full is detected, the control panel displays the warning message. In this state, any main tray related configurations and jobs that use the main tray cannot be performed. The warning screen is cleared by removing the paper on the main tray. By removing the paper, the paper detection lever is lowered. This causes machine to determine that the paper is removed and the “main tray full” message disappears.
- When the paper detection lever drive gear makes a turn, paper receiving control motor stops. The position of the paper detection lever drive gear is detected by the paper delivery control sensor.
- The paper level detection control is performed each time when paper is delivered to the tray to always monitor the height of paper. This control also serves as the function of preventing paper stacked on the tray from being disturbed by the paper delivered next.

Front view

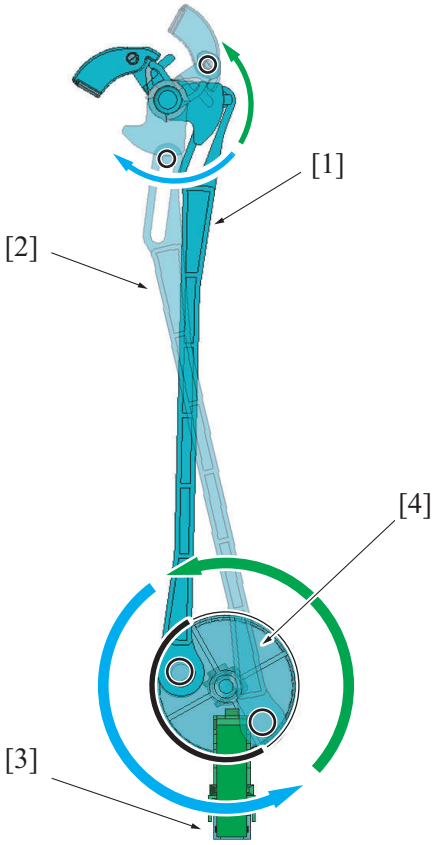

[1]	Paper detection lever (home position)	[2]	Paper detection lever (upper position)
[3]	Paper delivery control sensor (PS28)	[4]	Paper detection lever drive gear

(1) Paper detection lever tip enlarged picture

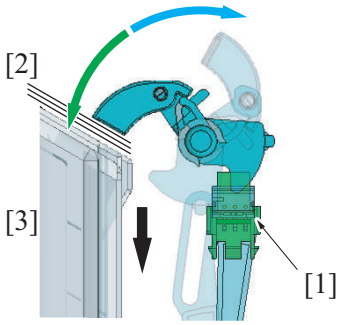

[1]	• Main tray upper position sensor/F (PS27) • Main tray upper position sensor/R (PS26)	[2]	Paper
[3]	Main tray	-	-

(2) Front view

Front view

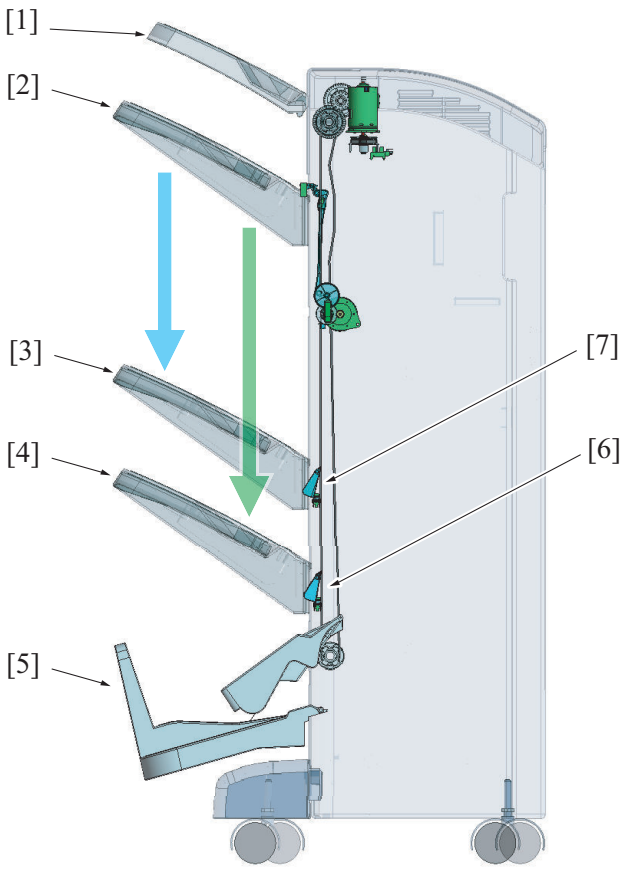

[1]	Sub tray	[2]	Main tray (home position)
[3]	Main tray (main tray full position) *1	[4]	Main tray (main tray full position) *2
[5]	Saddle tray	[6]	Main tray full detection sensor (PS29) :2
[7]	Main tray full detection sensor (PS29) *1	-	-

- *1: Saddle stitcher is mounted
- *2: Standard

(3) Amount of paper placed on the main tray

- The amount of paper placed on the main tray is different depending on the mode.

(a) Amount of paper placed on the main tray in sort or group mode

- When either the number or height of stacked sheets reaches the specified value, the main tray full is detected.

Number of stacked sheets

Paper size	Paper type	
	• Thin paper • Plain paper • Recycled paper • Basis weight: 52 g/m^2 to 90 g/m^2 (13 $^{13}/_{16}$ lb to 23 $^{15}/_{16}$ lb)	• Envelope • OHP film • Label • Letterhead • Thick paper (91 g/m^2 to 300 g/m^2, 24 $^{3}/_{16}$ lb to 79 $^{13}/_{16}$ lb)
• A5/A5S or less • Invoice/Invoice S or less	500 sheets	20 sheets
• A4S or less, B5/B5S or greater • Letter S or less	3,000 sheets	
• B4S or greater • Legal S or greater	1,500 sheets	

Height of stacked sheets

Paper length (FD length)	Height of stacked sheets	
	Standard	Saddle stitcher is mounted
• A4S or less • Letter S or less	375 mm (14.8 inch)	250 mm (9.8 inch)
• B4S or greater • Legal S or greater	187.5 mm (7.4 inch)	187.5 mm (7.4 inch)

- The height of stacked paper is detected by the paper detection lever.

(b) Amount of paper placed on the main tray in sort offset or group offset mode

- When either the number or height of stacked sheets reaches the specified value, the main tray full is detected.

Number of stacked sheets

Paper size	Paper type	
	• Thin paper • Plain paper • Recycled paper (52 g/m^2 to 90 g/m^2 (13 $^{13}/_{16}$ lb to 23 $^{15}/_{16}$ lb))	Thick paper (91 g/m^2 to 300 g/m^2, 24 $^3/_{16}$ lb to 79 $^{13}/_{16}$ lb)
• Less than B5	500 sheets	20 sheets
• A4/A4S • B5 • Letter/Letter S	3,000 sheets	
• B5S • B4 or greater • Legal	1,500 sheets	

Height of stacked sheets

Paper size	Height of stacked sheets	
	Standard	Saddle stitcher is mounted
• A4S or less • Letter S or less	375 mm (14.8 inch)	250 mm (9.8 inch)
• B4S or greater • Legal S or greater	187.5 mm (7.4 inch)	187.5 mm (7.4 inch)

- The height of stacked paper is detected by the paper detection lever.

(c) Amount of paper placed on the main tray in staple mode

- When either the number or height of stacked sheets reaches the specified value, the main tray full is detected.

Number of stacked sheets

No. of sheets to be stapled	Paper size	
	• Thin paper • Plain paper • Recycled paper (52 g/m^2 to 90 g/m^2 (13 $^{13}/_{16}$ lb to 23 $^{15}/_{16}$ lb))	Thick paper (91 g/m^2 to 300 g/m^2, 24 $^3/_{16}$ lb to 79 $^{13}/_{16}$ lb)
2 to 9 sheets	100 copies	20 copies
10 to 20 sheets	50 copies	
21 to 30 sheets	30 copies	
31 to 40sheets	25 copies	
41 or greater	20 copies	

Height of stacked sheets

Paper size	Height of stacked sheets	
	Standard	Saddle stitcher is mounted
• A4S or less • Letter S or less	375 mm (14.8 inch)	250 mm (9.8 inch)
• B4S or greater • Legal S or greater	187.5 mm (7.4 inch)	187.5 mm (7.4 inch)

- The height of stacked paper is detected by the paper detection lever.

10.3.3 Main tray upper detection mechanism

- The main tray includes the upper limit detection mechanism. The mechanism is to avoid malfunction and breakage of the main tray up/down mechanism that may be caused by the tray being lifted higher than the specified position.
- While paper is stacked on the main tray, if the main tray moves up and the top of the stack pushes the alignment plate up, the main tray upper position detect switch cover is raised and the main tray upper position detect switch is pressed. This causes the main tray up/down motor to stop rotating and the main tray to stop moving upward.

NOTE

- **In the case of small paper of which width is shorter than the distance formed between the alignment plates when the alignments are at home position, the paper may directly pushes up the main tray upper position detect switch cover. In that case, the main tray upward movement is also stopped.**
- **While the main tray is moving upward, if user press the main tray upper position detect switch cover by mistake, the main tray upward movement is also stopped. In this case, when the main tray upper position detect switch cover is released, if the top surface of the main tray does not reach the specified height, the main tray moves up again. When the top surface of the main tray reaches the specified height, the upward operation stops.**
- **For details of the main tray up/down operation, refer toPG.10.3.2 Main tray paper level detection control.**

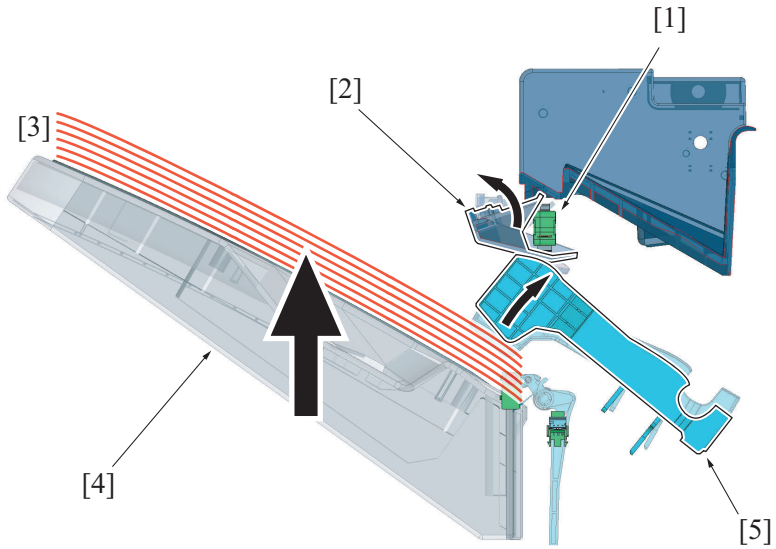

[1]	Main tray upper position detect switch (SW2)	[2]	Main tray upper switch cover
[3]	Paper	[4]	Main tray
[5]	Alignment plate	-	-

10.3.4 Tray full detection mechanism

(1) Main tray

- The main tray has two types of paper detection mechanism. When paper full is detected in either way, the warning message appears on the control panel. In this state, any main tray related configurations and jobs that use the main tray cannot be performed. The warning screen is cleared by removing paper from the main tray.

(a) Paper full detection mechanism 1

- When machine determines that the amount of paper stacked on the main tray exceeds the specified height, the paper detection lever causes the main tray up/down motor to rotate to lower the main tray to the specified position. When the main tray is lowered to the position of the main tray full detection sensor, the main tray full is determined.
  For details of main tray up/down control, refer to PG.10.3.2 Main tray paper level detection control.

(b) Paper full detection mechanism 2

- When multiple stapled sets of sheets are placed on the tray, the edge of the sheets may be higher than upper limit of the area that can be detected by the paper detection lever, and the height of the stack edge may exceed the specified value. To avoid this, the main tray upper sensor is mounted.
- When the paper delivered to the main tray blocks light from the main tray upper sensor, the main tray up/down motor is rotated and the main tray is lowered to the specified position. When the main tray is lowered to the main tray full detection sensor, the main tray full is determined.
  For details of main tray up/down control, refer toPG.10.3.2 Main tray paper level detection control.

Left side view

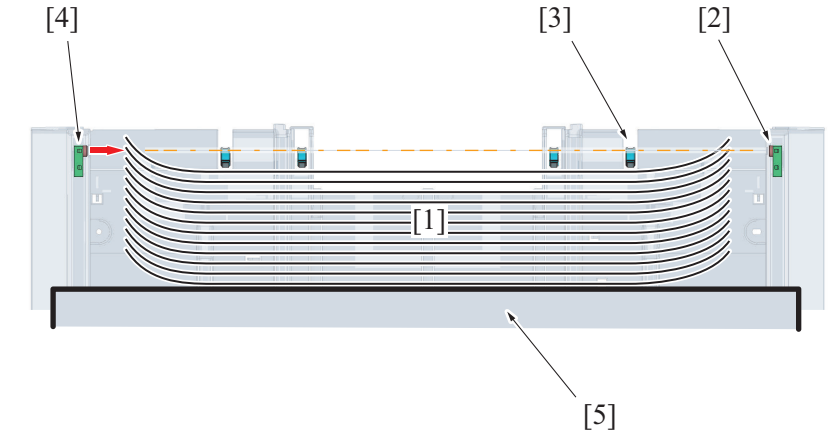

[1]	Paper	[2]	Main tray upper sensor (PS7)
[3]	Paper detection lever	[4]	Main tray upper sensor/out (PS6)
[5]	Main tray	-	-

(2) Sub tray

- When the specified amount of paper is delivered to the sub tray, the light from the sub tray full detection sensor is blocked by the stacked paper an the exit tray full condition is detected.
- When the sub tray full is detected, the warning message appears on the control panel. In this state, any sub tray related configurations and jobs that use the sub tray cannot be performed. The warning screen can be cleared by removing the paper on the sub tray.

Front view

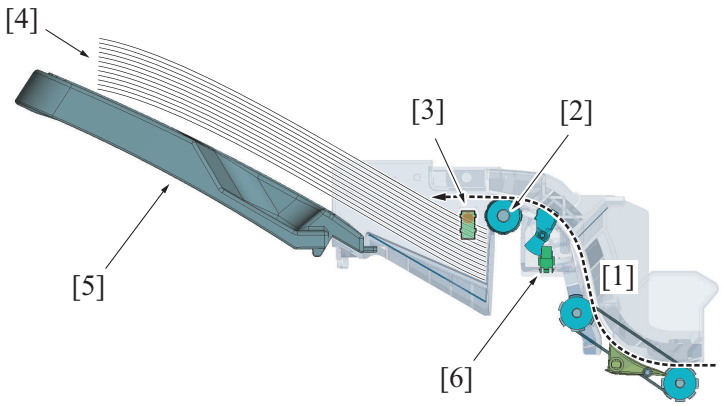

[1]	Sub tray paper transport route	[2]	Sub tray section exit roller
[3]	• Sub tray full detection sensor/out (PS9) • Sub tray full detection sensor/in (PS10)	[4]	Paper
[5]	Sub tray	[6]	Sub tray exit sensor (PS8)

(3) 3rd tray

- When predetermined quantity of paper is discharged to the 3rd tray, the 3rd exit tray full sensor actuator will be pushed up by the discharged paper. When the actuator is pushed up to the predetermined position, the 3rd exit tray full sensor will be unblocked by the actuator to detect the exit tray full.
- The warning message will be displayed on the operation panel when the 3rd tray full is detected. All setting operations and jobs will be disabled when the warning message is displayed on the screen. The warning message will be released by removing the paper on the 3rd tray.

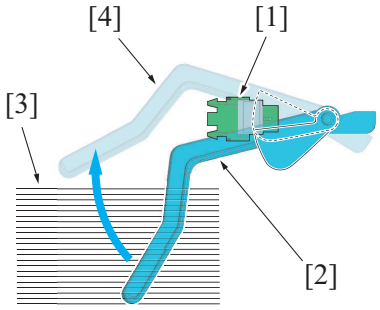

[1]	3rd exit tray full sensor (PS1)	[2]	3rd exit tray full detection actuator (no paper)
[3]	Paper	[4]	3rd exit tray full detection actuator (paper exit tray full)

(4) Saddle tray

- When paper is delivered to the saddle tray, the light from the saddle tray exit sensor is blocked. When the stacked sheets are removed, the sensor light is unblocked.
- After the specified sets of sheets are delivered to the saddle tray, if the light from the saddle tray exit sensor is blocked, a saddle tray full condition is detected.
  NOTE
  - **For a tri-fold job, if paper is present in the saddle tray when the job is started, the saddle tray full is detected, (Even only one set of sheets remains, tray full is detected.)**

- When the saddle tray full is detected, the warning message appears on the control panel. In this state, any saddle unit related configurations and jobs that use the saddle unit cannot be performed. The warning screen is cleared by removing the paper placed on the saddle unit.

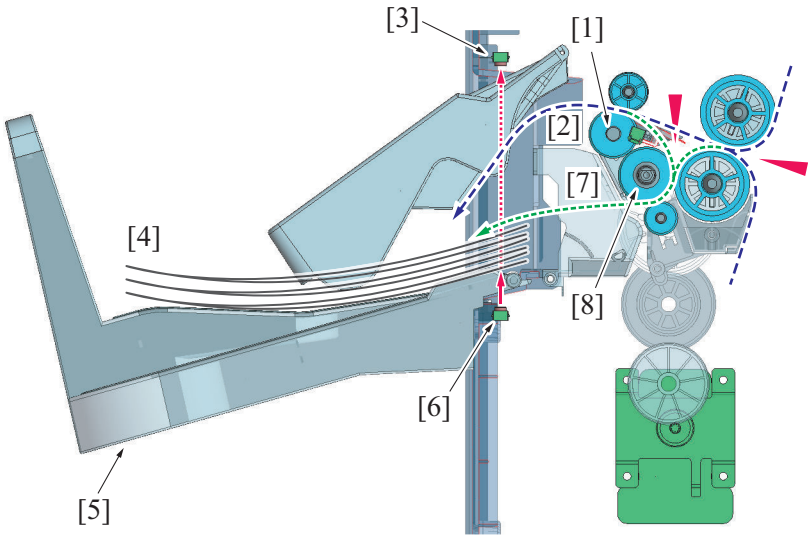

[1]	Saddle section exit roller	[2]	Paper transport route: Center folding
[3]	Booklet tray empty detection sensor/in (PS13)	[4]	Paper
[5]	Saddle tray	[6]	Booklet tray empty detection sensor/out (PS14)
[7]	Paper transport route: Tri-folding	[8]	Tri-folding roller

11. SADDLE SECTION SD-511

11.1 Configuration

Front left side perspective view

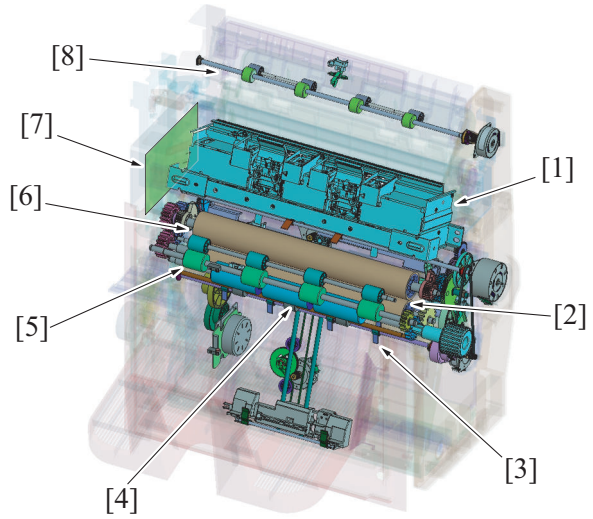

[1]	Stapler unit	[2]	Center folding roller/2
[3]	Center fold section lower paddle	[4]	Tri-folding roller
[5]	Saddle section exit roller	[6]	Center fold roller/1
[7]	SD drive board (SDDB)	[8]	Saddle section paper feed roller

Front right side perspective view

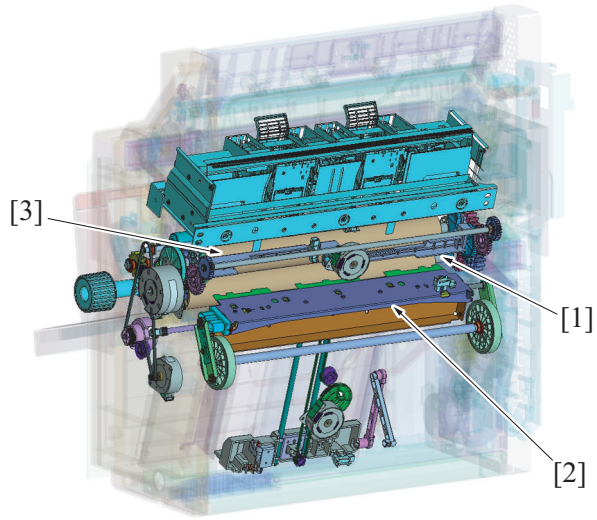

[1]	Center staple alignment plate drive gear/Rr	[2]	Center fold knife
[3]	Center staple alignment plate drive gear/Fr	-	-

Right side view

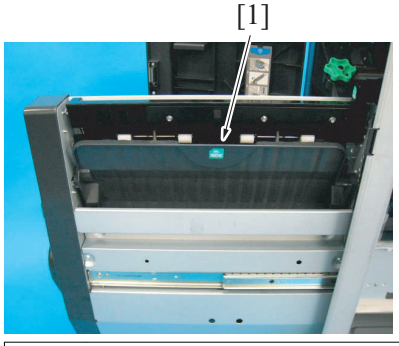

[1]	Jam removal cover (transport section)	-	-

Front left side view

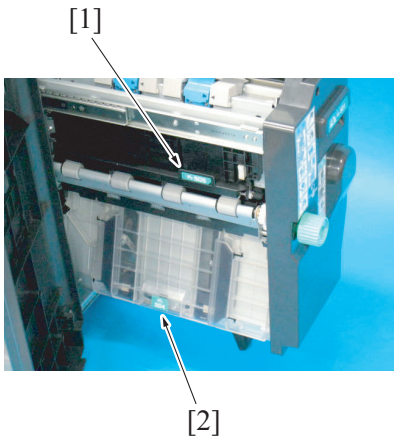

[1]	Jam removal cover (exit section)	[2]	Jam removal cover (alignment section)

11.2 Transport section

11.2.1 Drive

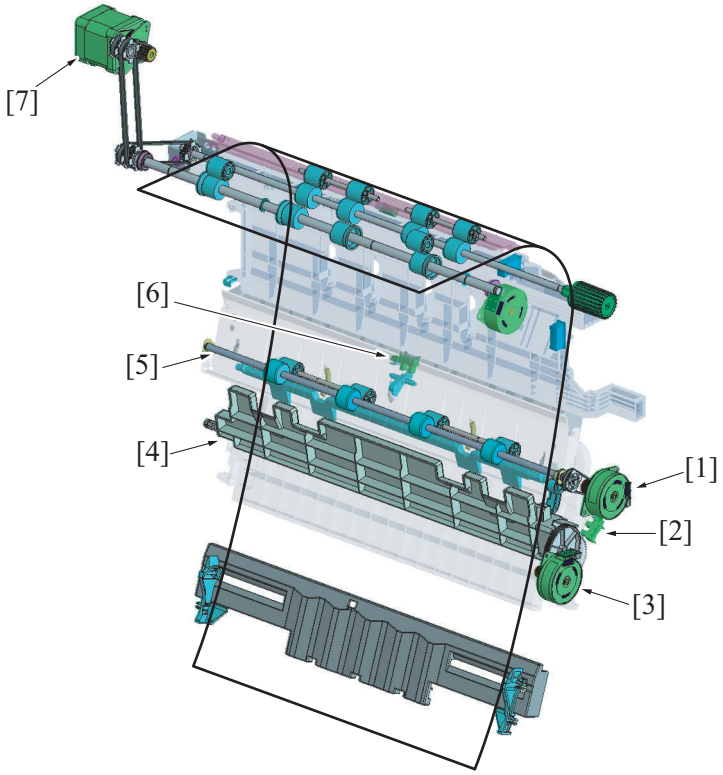

[1]	SD transport motor (M1) *	[2]	Curl cover detection sensor (PS2)
[3]	Paper discharge control motor (M2)	[4]	Curl cover
[5]	SD transport roller	[6]	SD entrance sensor (PS1)
[7]	FNS discharge motor (M3)	-	-

11.2.2 Paper transport

- The FNS discharger motor rotates in a reverse direction, and the paper is transported from the transport section of the finisher to the saddle stitcher.
- The paper then is transported to the alignment section by SD transport roller.
- The SD transport roller rotates when the SD transport motor is driven.

11.2.3 Curl cover

- The paper is transported to the alignment section one–by-one. A paper which is curled may cause paper jam at the entrance of the saddle stitcher.
- In order to prevent this paper jam, the curl cover is installed so that each paper is transported to the alignment section without fail.
- The curl cover is operated by the paper discharge control motor. Paper receiving opens/closes the feeding port inside the saddle unit entrance when the paper discharge control motor rotates in forward/reverse direction.

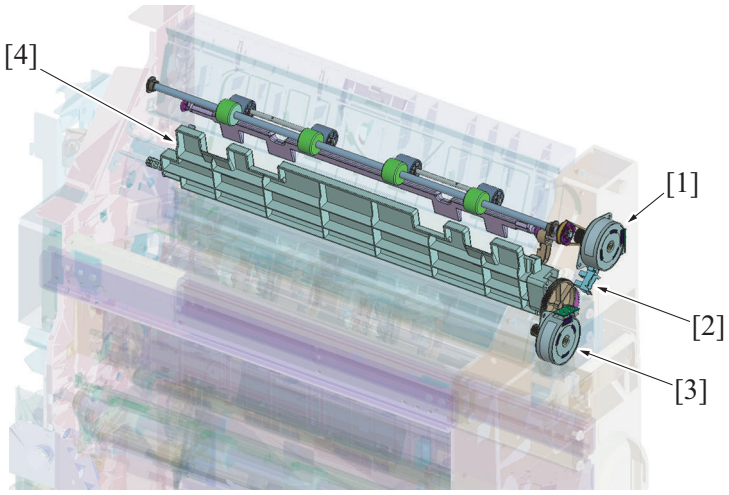

[1]	SD transport motor (M1)	[2]	Curl cover detection sensor (PS2)
[3]	Paper discharge control motor (M2)	[4]	Curl cover

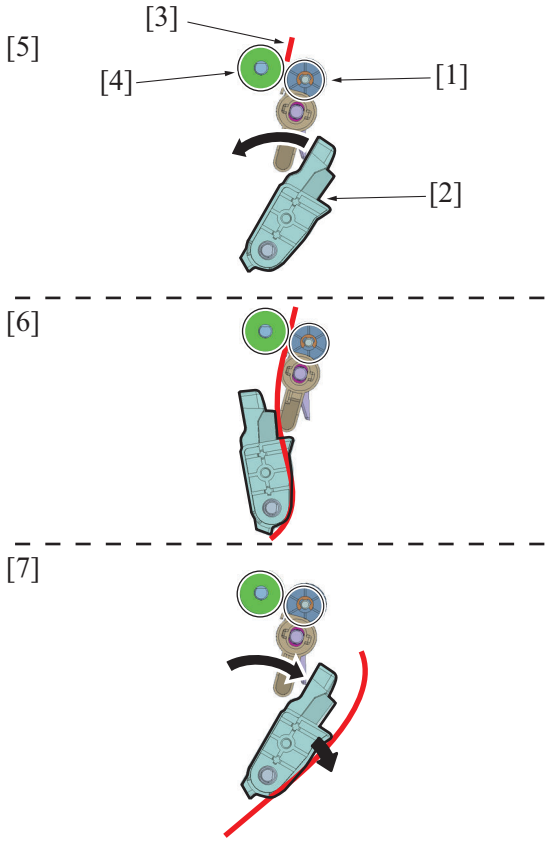

[1]	SD transport roll	[2]	Curl cover
[3]	Paper	[4]	SD transport roller
[5]	Paper transportation from within the finisher	[6]	Curl cover operation
[7]	Next paper standby (moves curl cover to the home position)	-	-

11.3 Alignment section

11.3.1 Drive

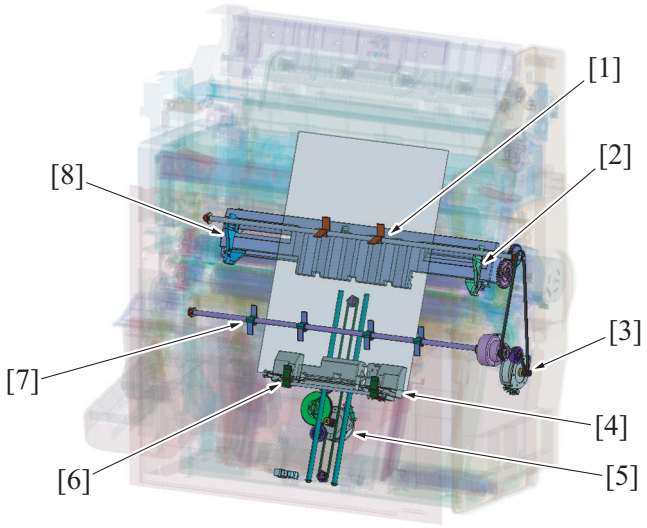

[1]	Center folding section upper paddle	[2]	Alignment plate/Fr
[3]	SD paddle motor (M7)	[4]	Stopper guide
[5]	Stopper drive motor (M4)	[6]	Paper grip
[7]	Center folding section lower paddle	[8]	Alignment plate/Rr

11.3.2 Alignment

- It aligns the paper transported to the alignment section.
- The paper CD alignment is conducted by alignment plate/Fr and alignment plate/Rr. The alignment plate shifts by forward/reverse rotation of the alignment motor to align the paper edge.
- The paper FD alignment is conducted by the stopper guide, center folding section upper paddle and center folding section lower paddle.
- The stopper guide moves up when the stopper drive motor rotates in forward/reverse direction to stop at the position which suits the length of the paper transported. The leading edge of the paper stops by the stopper guide to align the leading edge.
- When the paper is transported, the stopper drive motor rotates in forward/reverse direction to operate the stopper guide drive belt, and moves the stopper guide up/down.
- The center folding section upper paddle and the center folding section lower paddle are installed in order to receive the transported paper to the receiving section without fail.
- The paddle is driven by the SD paddle motor.

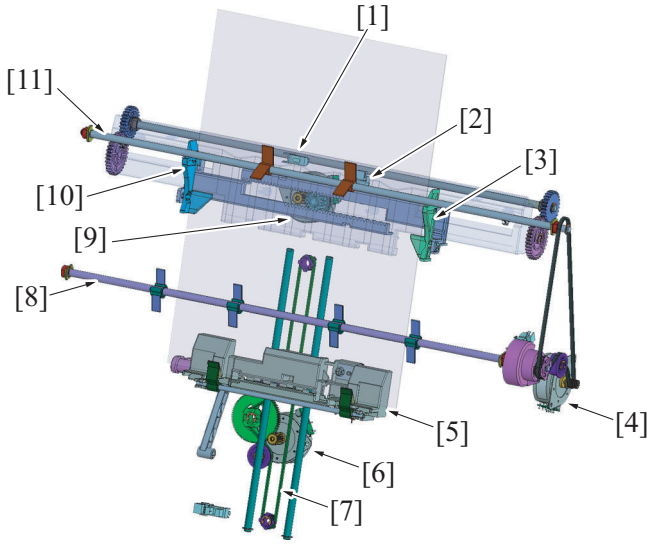

[1]	Center staple/fold stacker paper detect sensor (PS3)	[2]	Alignment home sensor (PS4)
[3]	Alignment plate/Fr	[4]	SD paddle motor (M7)
[5]	Stopper guide	[6]	Stopper drive motor (M4)
[7]	Stopper guide drive belt	[8]	Center folding section lower paddle
[9]	Alignment motor (M3)	[10]	Alignment plate/Rr
[11]	Center folding section upper paddle	-	-

(1) Alignment operation

- When the saddle exit sensor of the finisher detects the leading edge of the paper, the alignment motor starts rotating in the direction to close the alignment plate, and the alignment plate/Fr and the alignment plate/Rr stop at the position where it is slightly wider than the paper width.
- When the specified period of time has passed after the SD entrance sensor detects the trailing edge of the paper, the alignment motor rotates in forward/reverse direction to do oscillation of the alignment plate to align paper.
- The oscillation of the alignment plate is conducted each time a sheet of paper is transported, and the alignment plate is shifted to the standby position after the alignment operation is finished.
- The home position of the alignment plate is detected by the alignment home sensor.

(2) Stopper guide operation

- The stopper guide is moved up according to the paper size.
- The stopper guide moves up and stops at the specified position after the leading edge of the paper passes the saddle exit sensor.

(3) Paddle operation

- The up/down paddle is driven by the SD paddle motor. The up/down paddle is driven when the specified period of time has passed after the leading edge of the paper passed the saddle exit sensor of the finisher.
- The up/down paddle stops after the paper trailing edge passes the finisher's saddle exit sensor and the paddle rotates for the specified number of times.

11.3.3 Stopper guide

- At the stopper guide, paper is aligned in the FD direction. Paper conveyed to the aligning section is conveyed to the specified position.
- The exit grip holds the paper when shifting it to the specified position and when stapling papers.
- The alignment section, staple position and other positions (center folding, saddle folding, tri-folding) have their own up/down stop positions. They are controlled by the pulse number of the stopper drive motor.

(1) Stopper operation

- The stopper drive motor moves the stopper guide up and down in accordance with the paper size. The stopper home sensor detects the home position.

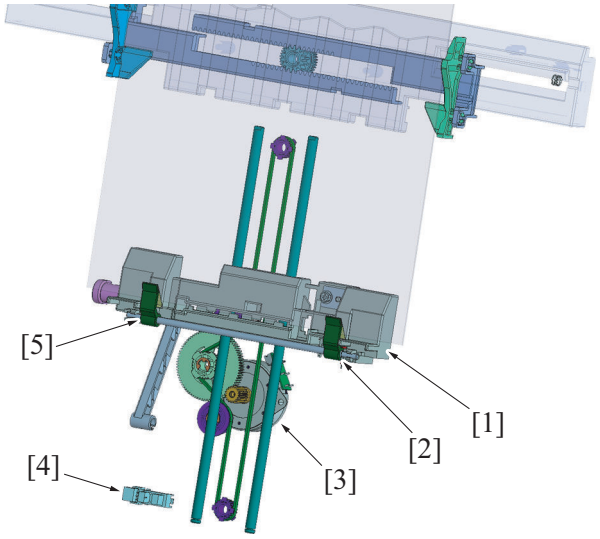

[1]	Stopper guide	[2]	Exit grip/Fr
[3]	Stopper drive motor (M4)	[4]	Stopper home sensor (PS6)
[5]	Exit grip/Rr	-	-

(2) Stopper control

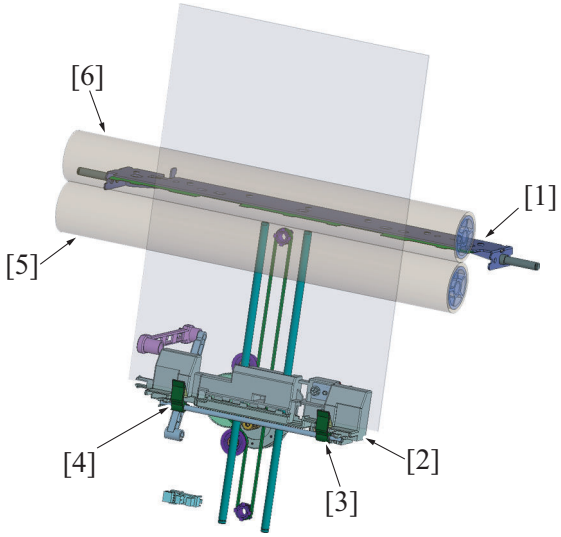

[1]	Center folding knife assy	[2]	Stopper guide
[3]	Exit grip/Fr	[4]	Exit grip/Rr
[5]	Center folding roller/2	[6]	Center folding roller /1

(a) Folding mode

- After a specified period of time since the last sheet of paper was aligned, the stopper solenoid is turned ON and the sheets of paper are held in place.
- After the sheets are held in place, the stopper drive motor rotates to move the stopper guide down and lower the sheets to the folding position.

(b) Saddle stitching mode

- After a specified period of time since the last sheet of paper was aligned, the stopper solenoid is turned ON and the sheets of paper are held in place.
- After the sheets are held in place, the stopper drive motor rotates to move the stopper guide down and lower the sheets to the saddle stitching position.
- After a specified period of time since stapling operation was completed, the alignment motor opens the alignment plates and the stopper drive motor starts rotating to move the stopper guide further down and lower the paper to the folding position.

(c) Tri-folding mode

- After a specified period of time since the last sheet of paper was aligned, the stopper solenoid is turned ON and the sheets of paper are held in place.
- After the sheets are held in place, the stopper drive motor rotates to move the stopper guide down and lower the sheets to the 1st folding position in the tri-folding.

11.4 Stapler

11.4.1 Drive

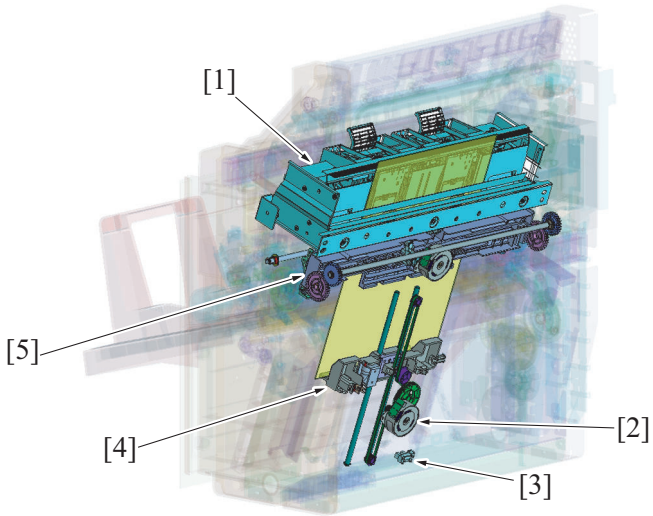

[1]	Stapler unit	[2]	Stopper drive motor (M4)

[3]	Stopper home sensor (PS6)	[4]	Stopper guide
[5]	Alignment tray	-	-

11.4.2 Operation

- The stapling operation is performed by the stapler motor.

(1) Stapling operation

- During the stapling operation, the stapler motor in the stapler pushes out the paper press section to the clincher via the drive gear to hold the paper for stapling.
  After stapling, the clincher motor in the stapler then bends the staple.
- The drive gear pushes out the pressed potrion of the paper toward the clincher to hold the paper, and then the pin will be pushed out.
- When the pin penetrates the paper batch, the pin will be bent to staple the paper batch at the clincher section.

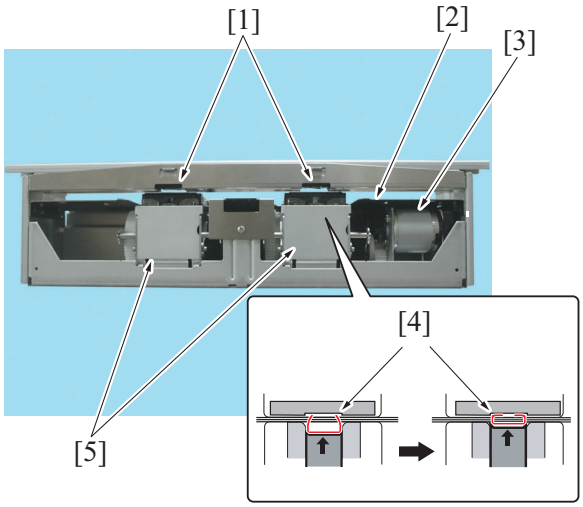

[1]	Clincher	[2]	Drive gear
[3]	Stapler motor	[4]	Staple
[5]	Stapler	-	-

(2) Staple control

(a) Stapling

- After completing the alignment operation of the alignment plate, the staple motor performs the stapling operation.
- The stapling operation is completed when the stapler home position sensor (rear) detects the home position and turn ON.

(b) Clogged staple detection

- When the stapler home position sensor (rear) does not turn ON after the specified period of time after it turned OFF during stapling, it is determined that the staple motor has the trouble, and stops the stapler motor.

(c) Cartridge detection

- The cartridge set switch detects the presence of a cartridge or the incorrect setting of a cartridge.
- When no cartridge is set or it is set incorrectly, the main body displays the error message on its display panel.

(d) Staple detection control

- When the staples run out, the staple empty switch turns ON and the main body displays the error message on its display panel.

11.5 Folding/Saddle stitching

11.5.1 Drive

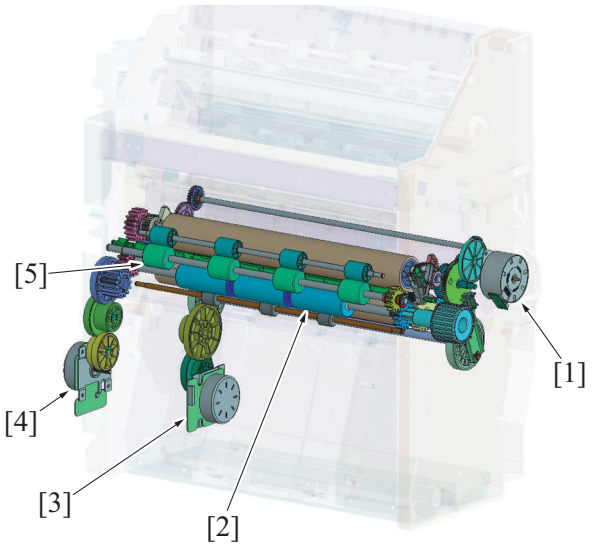

[1]	Center fold guide motor (M8)	[2]	Tri-folding roller
[3]	Center fold knife motor (M9)	[4]	Center fold roller motor (M5)
[5]	Saddle section exit roller	-	-

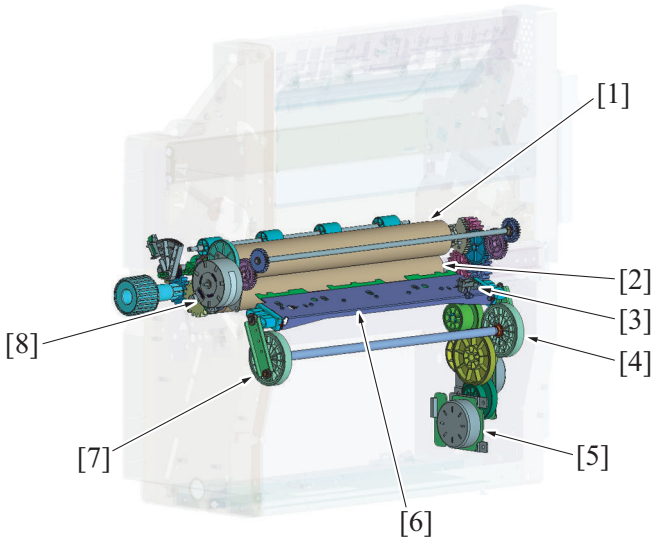

[1]	Center fold roller/1	[2]	Center folding roller/2
[3]	Center fold knife home sensor (PS8)	[4]	Fold drive gear/Rr
[5]	Center fold knife motor (M9)	[6]	Center folding knife assy
[7]	Fold drive gear/Fr	[8]	Center fold guide motor (M8)

11.5.2 Folding knife

- The center fold knife motor drives the folding knife.
- The folding knife is used in the folding/saddle stitching/tri-folding mode.
- In the tri-folding mode, it is used at the 1st folding.

(1) Folding knife operation

- The center fold knife motor rotates the crank shaft a half turn via the gear, and pushes the paper to the nip section with the folding knife.
- The folding rollers draw and fold the paper.
- The position of the stopper guide controls the folding position.

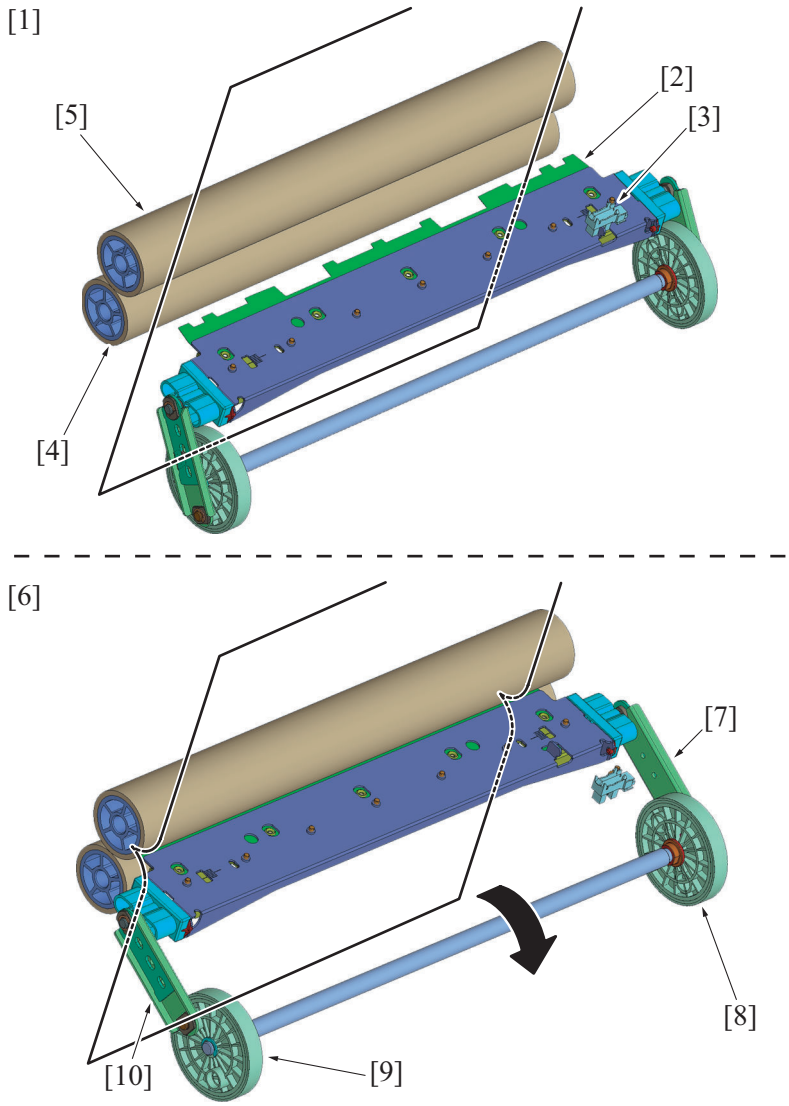

[1]	Before folding	[2]	Folding knife
[3]	Center fold knife home sensor (PS8)	[4]	Center folding roller/2
[5]	Center folding roller/1	[6]	Folding operation
[7]	Crank shaft/Rr	[8]	Fold knife assy drive gear/Rr
[9]	Fold knife assy drive gear/Fr	[10]	Crank shaft/Fr

(2) Folding knife control

- The center fold knife motor turns ON and sticks out the folding knife to the paper after a specified period of time since the stopper guide stops at the folding position.
- The center fold knife motor stops when the folding knife reciprocates after fold operation is completed and the center fold knife home sensor turns OFF.

11.6 Tri-folding

11.6.1 Drive

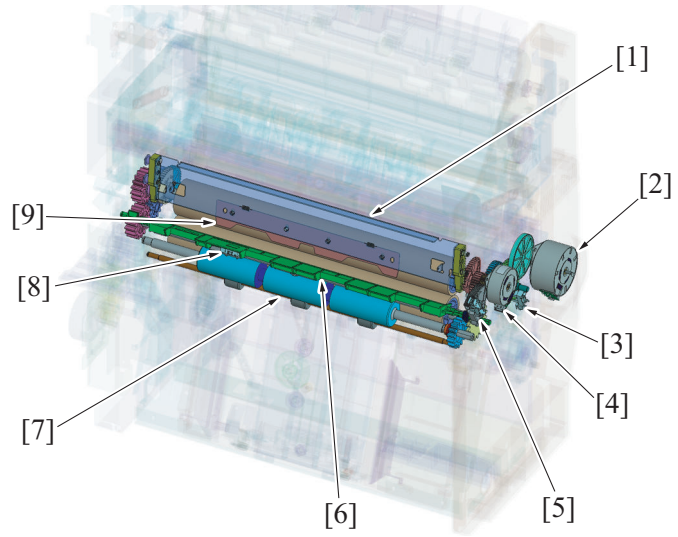

[1]	Tri-folding knife assy	[2]	Center fold guide motor (M8)
[3]	Guide home sensor (PS7)	[4]	Tri-fold guide motor (M6)
[5]	Tri-folding gate home sensor (PS11)	[6]	Center folding change gate
[7]	Tri-folding roller	[8]	Fold exit sensor (PS12)
[9]	Tri-folding knife	-	-

11.6.2 Tri-folding operation

1. When the center fold guide motor drives, the tri-folding gate rotates. The edge of the paper to which the first fold was applied at the center folding section, will be transported to the tri-folding path.
2. When the tri-folding guide motor drives, the tri-folding knife assy drive gear rotates to move down the tri-folding knife assy. The paper to which the first fold is applied at the center folding section will be pushed out to the tri-folding roller.
3. The paper is pulled into the tri-folding roller to tri-fold the paper.
4. When tri-folding is finished, the tri-folding gate will return to the home position. The home position of the tri-folding gate is detected by the tri-folding gate home sensor.

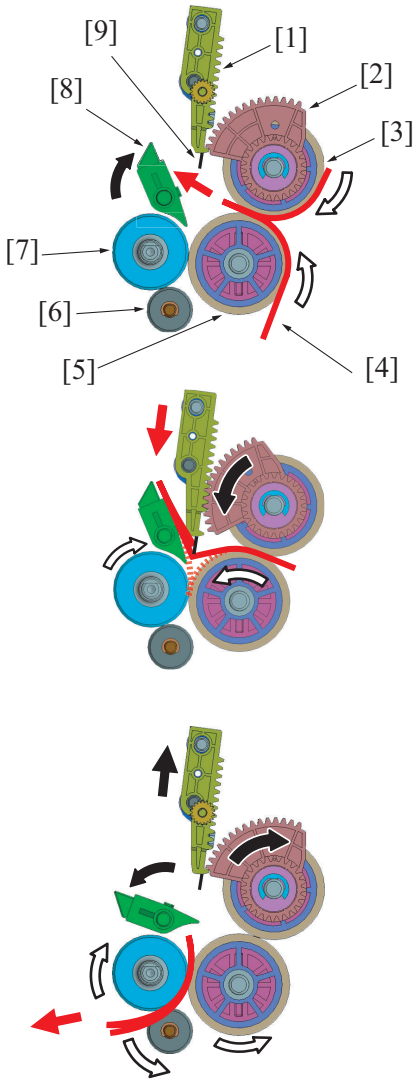

[1]	Tri-folding knife assy	[2]	Tri-folding knife assy drive gear
[3]	Center folding roller/1	[4]	Paper
[5]	Center folding roller/2	[6]	Tri-folding roll
[7]	Tri-folding roller	[8]	Tri-folding gate
[9]	Tri-folding knife	-	-

11.7 Exit section

11.7.1 Drive

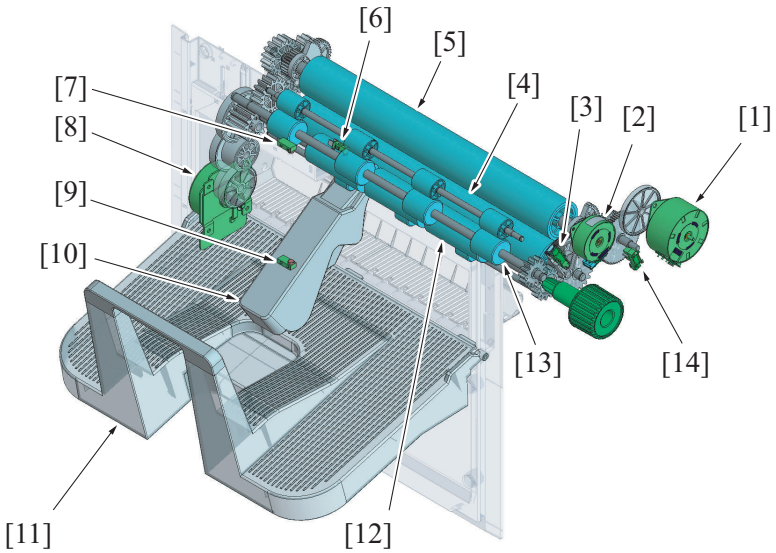

[1]	Center fold guide motor (M8)	[2]	Tri-fold guide motor (M6)
[3]	Tri-folding gate home sensor (PS11)	[4]	Center folding roller/2
[5]	Center folding roller/1	[6]	Fold exit sensor (PS12)
[7]	Booklet tray empty detection sensor/in (PS13)	[8]	Center fold roller motor (M5)
[9]	Booklet tray empty detection sensor/out (PS14)	[10]	Paper press
[11]	Saddle tray	[12]	Tri-folding roller
[13]	Saddle section exit roller	[14]	Guide home sensor (PS7)

11.7.2 Paper exit

- Center folded, saddle folded, or tri-folded paper is discharged to the saddle tray.
- The paper that is center folded and saddle folded is sent though the upper route, and the tri-folded paper is sent through the lower route to be discharged.
- The paper is discharged by driving the exit roller and the tri-fold roller. Both rollers are driven by the center fold roller motor.

(1) Paper exit for center fold / saddle fold

- The center fold roller motor is driven after the center fold or the saddle fold, and discharges the paper to the saddle tray by the paper exit roller.

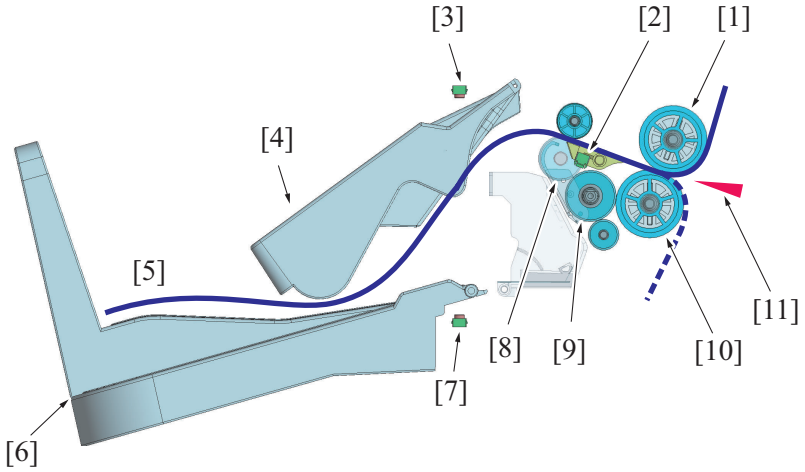

A3EPEPGC607AA

[1]	Center folding roller/1	[2]	Fold exit sensor (PS12)
[3]	Booklet tray empty detection sensor/in (PS13)	[4]	Paper press
[5]	Paper transport route	[6]	Saddle tray
[7]	Booklet tray empty detection sensor/out (PS14)	[8]	Saddle section exit roller
[9]	Tri-folding roller	[10]	Center folding roller/2
[11]	Folding knife	-	-

(2) Paper exit for tri-folding

- Since the paper is tri-folded by the tri-folding roller, the paper is transported through the lower route.

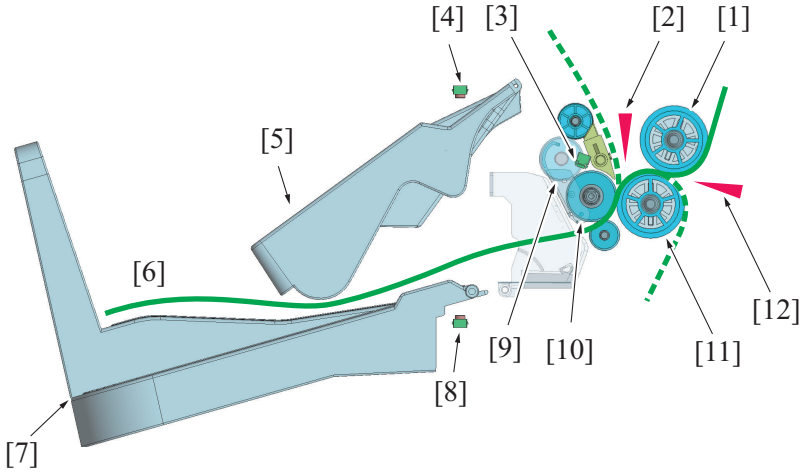

[1]	Center folding roller/1	[2]	Tri-folding knife
[3]	Fold exit sensor (PS12)	[4]	Booklet tray empty detection sensor/in (PS13) (PS13)
[5]	Paper press	[6]	Paper transport route
[7]	Saddle tray	[8]	Booklet tray empty detection sensor/out (PS14) (PS14)

[9]	Saddle section exit roller	[10]	Tri-folding roller
[11]	Center folding roller/2	[12]	Folding knife

PH THEORY OF OPERATION EK-606/EK-607/SC-508

1. EK-606

1.1 Configuration

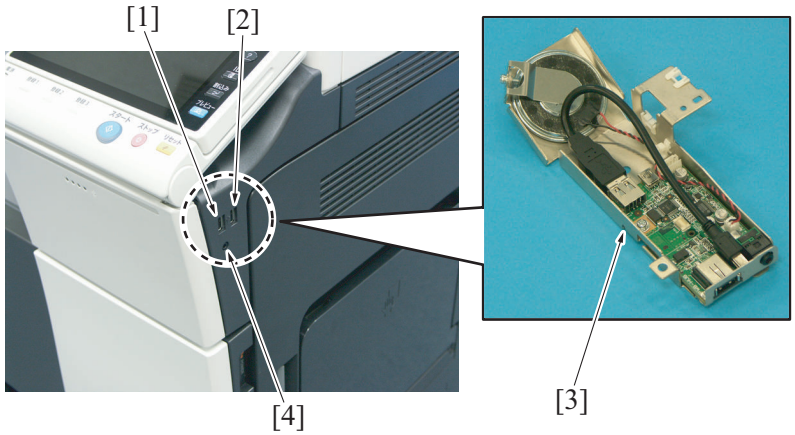

[1]	USB terminal (extension)	[2]	USB terminal (standard)
[3]	Local Interface Kit EK-606	[4]	Voice guidance output terminal

1.2 Operation

- The document can be printed directly from, or saved in, the USB memory.
- Connecting the USB keyboard (dealer option: overseas market only) will permit keyboard input.
- To use the voice guidance function, i-Option LK-104 v3 and Upgrade Kit UK-204 are required.

2. EK-607

2.1 Configuration

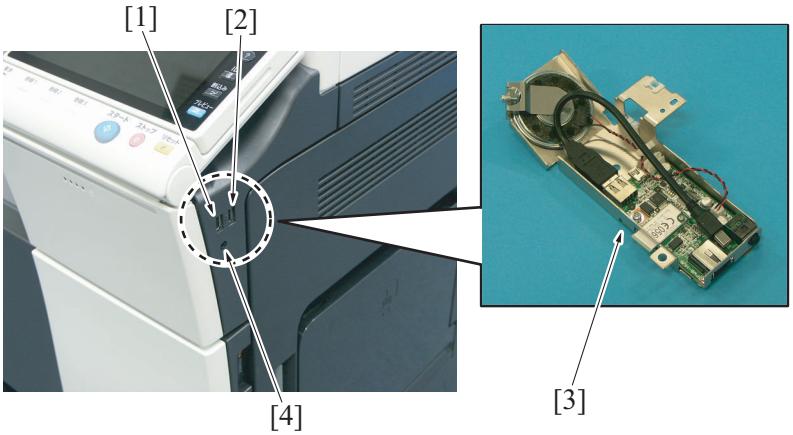

[1]	USB terminal (extension)	[2]	USB terminal (standard)
[3]	Local Interface Kit EK-607	[4]	Voice guidance output terminal

2.2 Operation

- The document can be printed directly from, or saved in, the USB memory.
- Connecting the USB keyboard (dealer option: overseas market only) will permit keyboard input.
- The local interface kit is mounted when the voice guidance function, and functions interacting with the portable phone or PDA (portable data terminal), compatible with Bluetooth, are to be used. It has a built-in speaker and Bluetooth communication receiver.
- To use the voice guidance function, i-Option LK-104 v3 and Upgrade Kit UK-204 are required.
- Using Bluetooth, the user can print files directly from the portable phone, download and print PDFs or other files from the portable phone, or save them in a box.
- If an XHTML file is downloaded from the portable phone, an image file can be downloaded from the URL described in XHTML, and printed as an image onto a location specified in the XHTML document.



[1]	Portable phone, PDA	[2]	Local Interface Kit EK-607

3. SC-508

3.1 Configuration

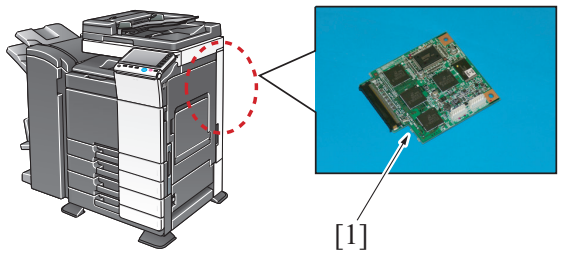

[1]	Security Kit SC-508 *	-	-

- *: When DF-701 is mounted, it is necessary to install two security kits to the machine for each front side scanning and back side scanning.

3.2 Operation

- The security kit offers the copy guard (copy prohibited) and password copy functions in addition to the conventional copy protect function. The copy guard security pattern or password copy security pattern printed on the original, is detected to thereby prevent unauthorized copies from being produced.
- The copy guard security pattern and password copy security pattern can be detected only by the Konica Minolta machine mounted with the copy guard and password copy functions.

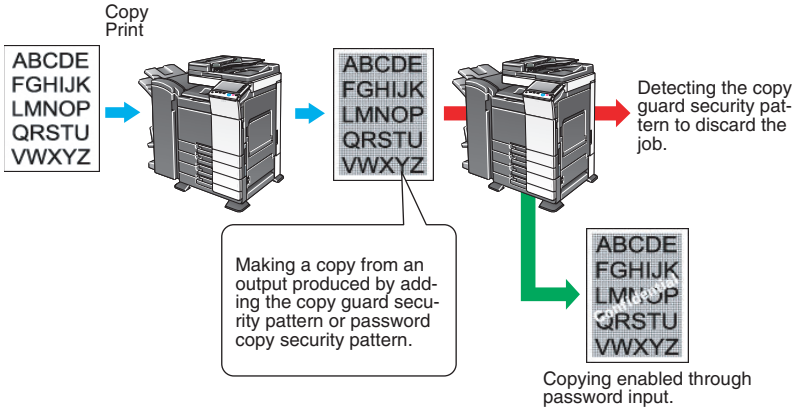

PI THEORY OF OPERATION UK-208/UK-209

1. CONFIGURATION

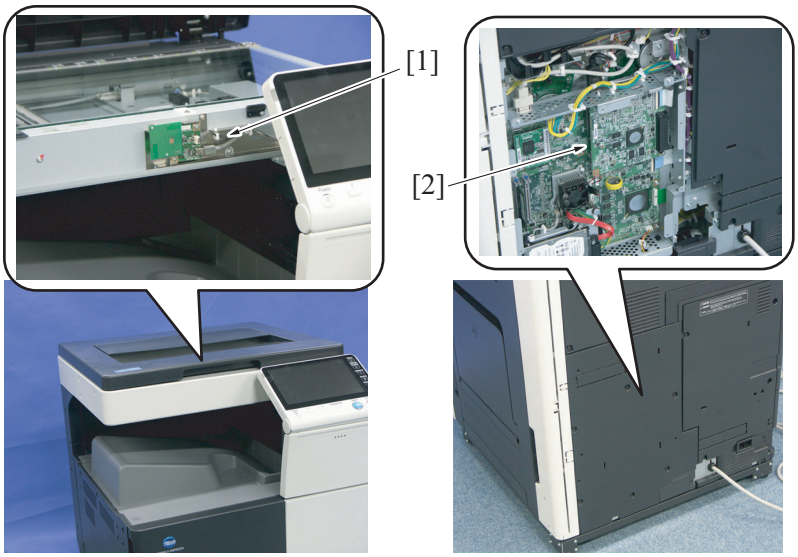

[1]	Upgrade kit (UK-208)	[2]	Upgrade kit (UK-209) *

*: When the dual scan document feeder DF-701 is installed, no installation of the upgrade kit UK-209 is required.

2. OPERATION

2.1 Outline

- Pressing the power key on the control panel allows you to release the setting for returning from the ErP Auto Power Off mode. You also can release it with a remote operation by installing the upgrade kit (UK-208).
- For enabling this machine, the following conditions are required.
  - The MFP must be connected with the network.
  - A wireless LAN access point must be connected over the connected network.
- When the upgrade kit (UK-208) is installed, sending a print instruction enables the MFP to return from the ErP Auto Power OFF mode to make a print.
  However, settings shall be made from the menu of the printer driver.

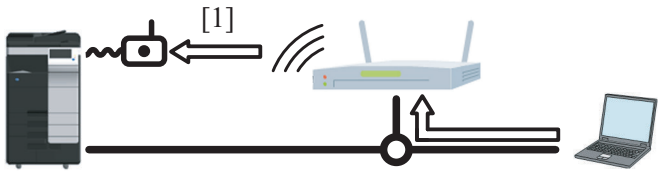

[1]	Instruction for returning from ErP Auto Power OFF	-	-

- Installing upgrade kit UK-208, together with upgrade kit UK-209, allows you to use an Android device or iOS device to return from the ErP Auto Power OFF mode with a remote operation.
  However, when DF-701 is installed, since the dual scan image processing board (UK-209) has been installed, the upgrade kit (UK-209) is not required.
- For using the Android device or iOS device, the following settings are required.
  - The upgrade kit (UK-209) must be installed.
  - The software SW192 must be set effectively.
  - The required settings in [Utility (Administrator Settings)] -> [Network Settings] -> [Extended Network Settings] must be configured.
  - The specified application must be installed on the Android device or iOS device.

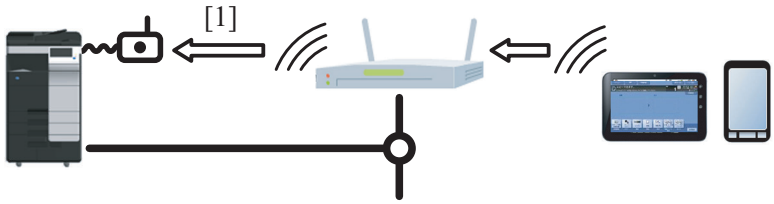

[1]	Instruction for returning from ErP Auto Power OFF	-	-

2.2 Connection metting

2.2.1 Default setting

NOTE

- **Refer to the installation manual for how to setup UK-208/UK-209.**
- **Be sure to check the user's network environment before configuring above settings.**

(1) Service Mode settings

1. Select [Service Mode] -> [Network Settings] -> [2nd Network Settings] -> [2nd network card settings].
2. Select [Set], then select [OK].
3. Select [System 1].
4. Select [Marketing Area].
5. Select [Wireless LAN Destination].
6. Select the target area.
   I.11.14.1 Marketing Area
7. Turn OFF and ON the main power.
8. Select [Service Mode] -> [Network Settings] -> [2nd Network Settings] -> [Operating Mode].
9. Select [Access Point Mode], then select [OK].
10. Turn OFF and ON the main power.

(2) Administrator settings

1. Select [Menu] -> [Utility] -> [Administrator Settings] -> [Network Settings] -> [3/3 Extended Network Settings] -> [Operating Mode].
2. Select [Awake from Erp Only].
   If [Awake from Erp Only] is not selected, the machine cannot return from the Erp mode.
3. Select [Wireless LAN Adapter], then configure settings for the wireless LAN access point.
4. Select [Device Setting], then check the MAC address of the upgrade kit (UK-208).

(3) Printer driver settings

- To return from the Erp Auto Power OFF mode during printing, configure the settings on the printer driver.

1. Open the property screen of the printer.

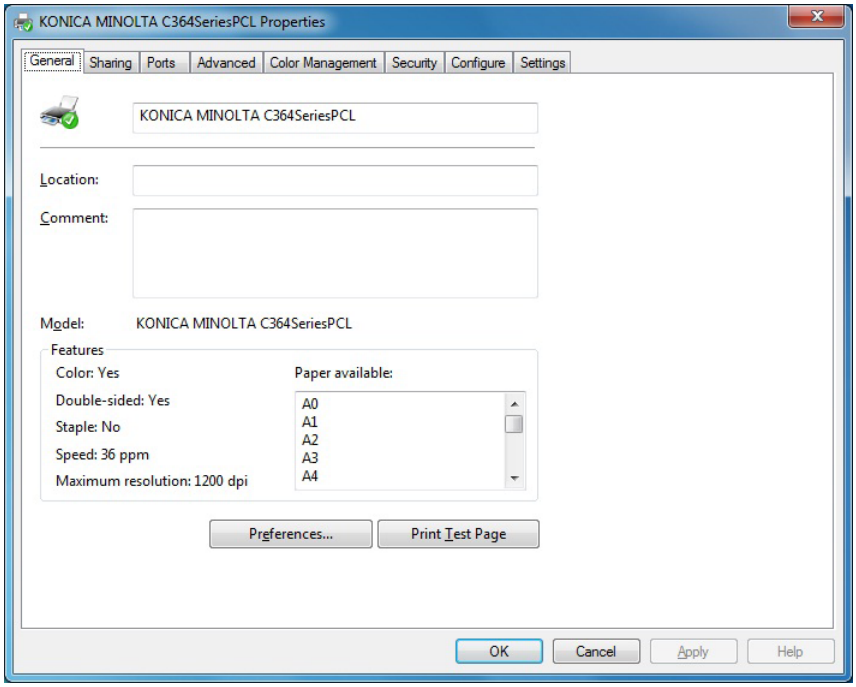

2. Select the [Settings] tab, then select [Wake-On-Lan Settings...].

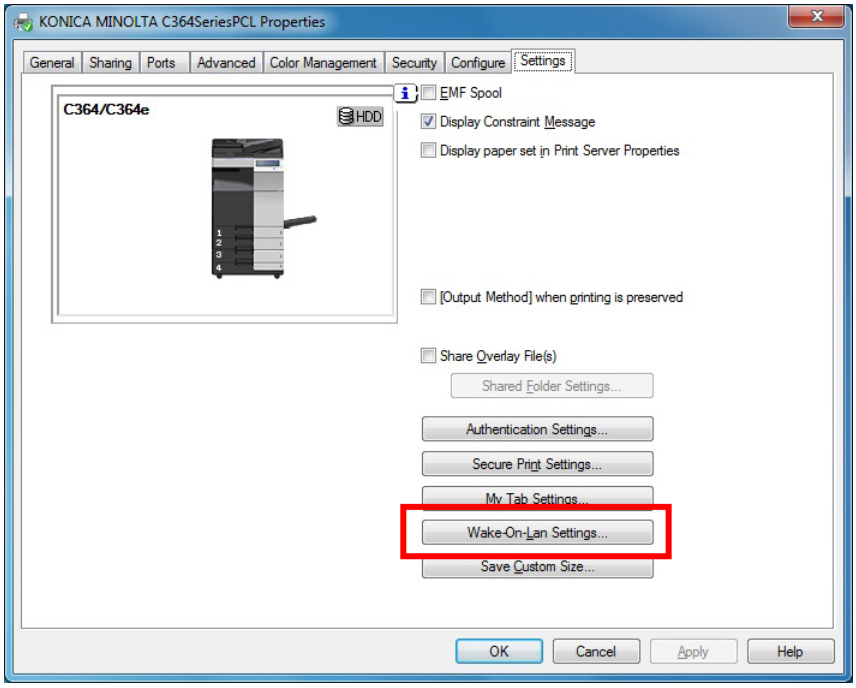

3. Select [Awake before print from Power Saving Mode], then select [OK].

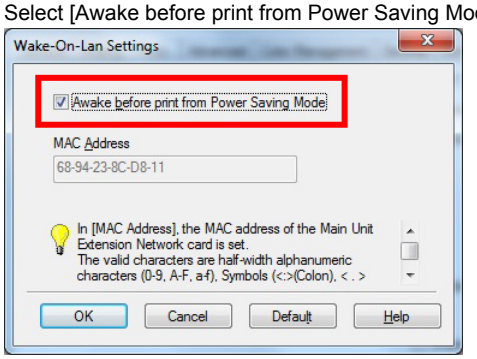

PJ THEORY OF OPERATION FK-508/FK-511

1. COMMUNICATION CONTROL

1.1 FIF bits of DIS, DTC and DCS

NOTE

- **Considered to be A4 width when the DIS recording paper width is invalid (1, 1).**
  Becomes a FIF error when the DCS recording paper width is invalid (1, 1).
- **Considered to be unlimited when the DIS recording paper length is invalid (1, 1).**
  Considered to be unlimited when the DCS recording paper length is invalid (1, 1).
  The DCS recording paper length in a machine is made to be of the same length as that in a remote station and is sent.
- **Considered to be 2400bps when the DIS transmission speed is an undefined value.**
  Becomes a FIF error when the DCS transmission speed is an undefined value.
- **Considered to be 40ms instruction when the MSLT of DCS is an undefined value.**
- **Considered to have mm ability when DIS inch ability and mm ability are both set to OFF.**
  Considered to be 200*100 pels/inch when the DCS resolution receives the inch instruction at 3.851/mm.
  Becomes a FIF error when more than one of bit41, 42 and 43 are set to on in the resolution of DCS.
- **Becomes a FIF error when DCS receives the MMR instruction without ECM.**
- **Becomes a FIF error when DCS receives the file transfer (BFT) instruction without ECM.**
- **Becomes a FIF error when DCS shows an instruction which exceeds the ability of the machine.**
- **FIF of DIS/DTC is not sent if last octet is 0.**
  DCS sends FIF whose length is the same as that of the machine.
- **When undefined signals are received, they are received and ignored in consideration of the future expansion. (not an error)**

1.1.1 FIF data configuration list (DIS/DTC)

(1) Octet 4

bit	Function	Contents	Default
1	T.37 Internet fax (Simple mode)		0
2	Reserved		0
3	T.38 real time Internet fax		0
4	Third generation mobile network		0
5	Reserved		0
6	V.8 ability		0
7	ECM frame	1: 64 octet 0: 256 octet	0
8	Reserved		0

(2) Octet 5

bit	Function	Contents	Default
9	Ready for polled transmission	1: polled transmission documents exist 0: no polled transmission documents	@
10	Receiver ability	1: Reception is possible. 0: Reception is impossible.	@
11	Transmission speed ability	Refer to *1.	1
12			1
13			0
14			1
15	R8*7.71/mm and / or 200*200 pels/25.4 mm		1
16	Two-dimensional coding ability	1: MR 0: MH	1

@) Changes to 0 or 1 according to a status of devices.

***1: Transmission speed ability (bit 11, 12, 13 and 14)**

11	12	13	14	Contents	Transmission speed
0	0	0	0	V27 ter fall back mode	24
0	1	0	0	V27 ter	48, 24
1	0	0	0	V29	96, 72
1	1	0	0	V27 ter & V29	96, 72, 48, 24
1	1	0	1	V27 ter & V29 & V17	144, 120, 96, 72, 48, 24

(3) Octet 6

bit	Function	Contents	Default
17	Recording paper width ability	bit 17,18 0,0=A4 0,1=A3 1,0=B4	0

bit	Function	Contents	Default
18		1,1=Invalid	1
19	Recording paper length ability	bit 19,20 0,0=A4 0,1=Unlimited 1,0=B4 1,1=Invalid	0
20			1
21	Minimum scan line time ability	Refer to *2.	1
22			0
23			0
24	Expansion field		1

***2: Minimum scan line time ability (bit 21, 22 and 23)**

21	22	23	Contents	
0	0	0	3.851/mm --- 20 ms	7.71/mm --- 20 ms
0	0	1	3.851/mm --- 40 ms	7.71/mm --- 40 ms
0	1	0	3.851/mm --- 10 ms	7.71/mm --- 10 ms
0	1	1	3.851/mm --- 10 ms	7.71/mm --- 5 ms
1	0	0	3.851/mm --- 5 ms	7.71/mm --- 5 ms
1	0	1	3.851/mm --- 40 ms	7.71/mm --- 20 ms
1	1	0	3.851/mm --- 20 ms	7.71/mm --- 10 ms
1	1	1	3.851/mm --- 0 ms	7.71/mm --- 0 ms

(4) Octet 7

bit	Function	Contents	Default
25	Reserved		0
26	Non-compression mode		0
27	Error correction mode (ECM) ability	1: with ECM 0: without ECM	1
28		0: fixed	0
29	Reserved		0
30	Reserved		0
31	T.6 coding (MMR) ability	1: with MMR 0: without MMR	1
32	Expansion field		1

(5) Octet 8

bit	Function	Contents	Default
33	Field not valid		0
34	Multi-selective polling	1: Ability 0: No ability	0
35	Polled sub-address		0
36	T.43 coding ability		0
37	Plain Interleave		0
38	32K ADPCM voice coding		0
39	Reserved		0
40	Expansion field		1

(6) Octet 9

bit	Function	Contents	Default
41	R8*15.41/mm		1
42	300*300 pels/25.4 mm		0
43	R16*15.41/mm and / or 400*400 pels/25.4 mm		1
44	inch ability		1
45	mm ability		1
46	Minimum scan line time ability of high resolution	0: T15.4=T7.7 1: T15.4=1/2T7.7	0
47	Selective polling		1
48	Expansion field		1

(7) Octet 10

bit	Function	Contents	Default
49	Sub address ability		1
50	Password		1
51	Ready for data file transmission (polling)		0
52	Reserved		0
53	BFT transfer ability		0
54	DTM transfer ability		0
55	EDI transfer ability		0
56	Expansion field		0

(8) Octet 11

bit	Function	Contents	Default
57	BTM transfer ability		0
58	Reserved		0
59	Character or mixed mode documents ready for Tx (polling)		0
60	Character mode ability		0
61	Reserved		0
62	Mixed mode ability		0
63	Reserved		0
64	Expansion field		0

(9) Octet 12

bit	Function	Contents	Default
65	Processible mode (T.505)		0
66	Digital network ability		0
67	Full-duplex communication ability	1: Full-duplex 0: Half-duplex	0
68	JPEG coding ability		0
69	Full color mode		0
70		0: Fixed	0
71	12 bits / pixel component		0
72	Expansion field		1

(10) Octet 13

bit	Function	Contents	Default
73	No sub sampling (1:1:1)		0
74	Custom illuminance		0
75	Custom gamut range		0
76	North America Letter (215.9*279.4) ability		0
77	North America Legal (215.9*355.6) ability		0
78	Single progression sequential coding (T.85) basic ability		1
79	Single progression sequential coding (T.85) optional LO ability		@
80	Expansion field		0

@) Changes to 0 or 1 according to a status of devices.

(11) Octet 14

bit	Function	Contents	Default
81	HKM key management capability		0
82	RSA key management capability		0
83	Override capability		0
84	HFX40 cipher capability		0
85	Alternative cipher number 2 capability		0
86	Alternative cipher number 3 capability		0
87	HFX40-I hashing capability		0

bit	Function	Contents	Default
88	Expansion field		1

(12) Octet 15

bit	Function	Contents	Default
89	Alternative hashing system number 2 capability		0
90	Alternative hashing system number 3 capability		0
91	Reserved		0
92	T.44 (Mixed raster content)		0
93	T.44 (Mixed raster content)		0
94	T.44 (Mixed raster content)		0
95	Page length maximum strip size for T.44 (Mixed raster content)		0
96	Expansion field		1

(13) Octet 16

bit	Function	Contents	Default
97	Color/gray-scale 300 pels/25.4 mm x 300 lines/25.4 mm or 400 pels/25.4 mm x 400 lines/25.4 mm resolution		0
98	100 pels/25.4 mm x 100 lines/25.4 mm for color/gray scale		0
99	Simple phase C BFT negotiations capability		0
100	Extended BFT negotiations capability		0
101	Internet selective polling address (ISP)		0
102	Internet routing address (IRA)		0
103	Reserved		0
104	Expansion field		1

(14) Octet 17

bit	Function	Contents	Default
105	600 pels/25.4 mm x 600 lines/25.4 mm		1
106	1200 pels/25.4 mm x 1200 lines/25.4 mm		0
107	300 pels/25.4 mm x 600 lines/25.4 mm		0
108	400 pels/25.4 mm x 800 lines/25.4 mm		0
109	600 pels/25.4 mm x 1200 lines/25.4 mm		0
110	Color/gray-scale 600 pels/25.4 mm x 600/25.4 mm resolution		0
111	Color/gray-scale 1200 pels/25.4 mm x 1200/25.4 mm resolution		0
112	Expansion field		0

(15) Octet 18

bit	Function	Contents	Default
113	Double sided printing capability (alternate mode)		0
114	Double sided printing capability (continuous mode)		0
115	Black and white mixed raster content profile (MRCbw)		0
116	T.45 (run length color encoding)		0
117	Shared date memory capacity	bit 117,118 0,0=Disable 0,1= Level 1=1.0 Mbytes 1,0= Level 2=2.0 Mbytes 1,1= Level 3=unlimited (i.e. 32 Mbytes or more)	0
118			0
119	Reserved		0
120	Expansion field		0

(16) Octet 19

bit	Function	Contents	Default
121	Flow control capability for T.38 communication		0
122	K > 4		0

bit	Function	Contents	Default
123	Internet aware T.38 mode fax device		0
124	T.89 (Application profiles for ITU-T T.88)	Refer to *3.	0
125			0
126			0
127	sYCC-JPEG coding		0

***3: T.89 (Application profile for ITU-T T.88)**

124	125	126	Contents
0	0	0	Not used
0	0	1	Profile 1
0	1	0	Profile 2
0	1	1	Profile 3
1	0	0	Profile 2 and 3
1	0	1	Reserved
1	1	0	Reserved
1	1	1	Reserved

1.1.2 FIF data configuration list (DCS)

(1) Octet 4

bit	Function	Contents	Default
1	T.37 Internet fax (Simple mode)		0
2	Reserved		0
3	T.38 Real time Internet fax		0
4	Third generation mobile network		0
5	Reserved		0
6	Invalid		0
7	Invalid		0
8	Reserved		0

(2) Octet 5

bit	Function	Contents	Default
9		0: fixed	0
10	Reception command		1
11	Transmission speed instruction	Refer to *1.	@
12			@
13			@
14			@
15	R8*7.71/mm or 200*200 pels/25.4 mm	1: 7.71/mm 0: 3.851/mm	@
16	Two-dimensional coding instruction	1: MR 0: MH	@

@) Changes to 0 or 1 according to a status of devices.

***1: Transmission speed appointment (bit 11, 12, 13 and 14)**

11	12	13	14	Contents
0	0	0	0	24/V27 ter
0	1	0	0	48/V27 ter
1	0	0	0	96/V29
1	1	0	0	72/V29
0	0	0	1	144/V17
0	1	0	1	120/V17
1	0	0	1	96/V17
1	1	0	1	72/V17

(3) Octet 6

bit	Function	Contents	Default
17	Recording paper width instruction	bit 17,18 0,0=A4	@

bit	Function	Contents	Default
18		0,1=A3 1,0=B4 1,1=Invalid	@
19	Recording paper length instruction	bit 19,20 0,0=A4 0,1=Unlimited 1,0=B4 1,1=Invalid	@
20			@
21	Minimum scan line time instruction	Refer to *2.	@
22			@
23			@
24	Expansion field		@

@) Changes to 0 or 1 according to a status of devices.

***2: Minimum scan line time instruction (bit 21, 22 and 23)**

21	22	23	Contents
0	0	0	20 ms
0	0	1	40 ms
0	1	0	10 ms
1	0	0	5 ms
1	1	1	0 ms

(4) Octet 7

bit	Function	Contents	Default
25	Reserved		0
26	Non-compression mode		0
27	Error correction mode (ECM) instruction	1: with ECM 0: without ECM	@
28	Frame size instruction	1: 64 octet 0: 256 octet	@
29	Reserved		0
30	Reserved		0
31	T.6 coding (MMR) instruction	1: with MMR 0: without MMR	@
32	Expansion field		@

@) Changes to 0 or 1 according to a status of devices.

(5) Octet 8

bit	Function	Contents	Default
33	Field Not valid		0
34		0: fixed	0
35		0: fixed	0
36	T.43 Coding		0
37	Plain Interleave		0
38	32K ADPCM Voice coding		0
39	Reserved		0
40	Expansion field		@

@) Changes to 0 or 1 according to a status of devices.

(6) Octet 9

bit	Function	Contents	Default
41	R8*15.41/mm		@
42	300*300 pels/25.4 mm		@
43	R16*15.41/mm or 400*400 pels/25.4 mm		@
44	inch/mm instruction	1: mm setting 0: inch setting	@
45	Arbitrary		0
46	Arbitrary		0
47		0: fixed	0
48	Expansion field		@

@) Changes to 0 or 1 according to a status of devices.

(7) Octet 10

bit	Function	Contents	Default
49	Sub address transmission		@
50	Password (SID) transmission		@
51		0: fixed	0
52	Reserved		0
53	BFT transfer		@
54	DTM transfer		0
55	EDI transfer		0
56	Expansion field		@

@) Changes to 0 or 1 according to a status of devices.

(8) Octet 11

bit	Function	Contents	Default
57	BTM transfer		0
58	Reserved		0
59		0: fixed	0
60	Character mode		0
61	Reserved		0
62	Mixed mode		0
63	Reserved		0
64	Expansion field		@

@) Changes to 0 or 1 according to a status of devices.

(9) Octet 12

bit	Function	Contents	Default
65	Processible mode (T.505)		0
66	Digital network ability		0
67	Full-duplex communication instruction	1: Full-duplex 0: Half-duplex	0
68	JPEG coding		0
69	Full color mode		0
70	Default Huffman table use		0
71	12 bits / pixel component		0
72	Expansion field		@

@) Changes to 0 or 1 according to a status of devices.

(10) Octet 13

bit	Function	Contents	Default
73	No sub sampling (1:1:1)		0
74	Custom illuminance		0
75	Custom gamut range		0
76	North America Letter (215.9*279.4)		0
77	North America Legal (215.9*355.6)		0
78	Single progression sequential coding (T.85) basic		@
79	Single progression sequential coding (T.85) optional LO		@
80	Expansion field		@

@) Changes to 0 or 1 according to a status of devices.

(11) Octet 14

bit	Function	Contents	Default
81	HKM key management selected		0
82	RSA key management selected		0
83	Override mode selected		0
84	HFX40 cipher selected		0
85	Alternative cipher number 2 selected		0
86	Alternative cipher number 3 selected		0

bit	Function	Contents	Default
87	HFX40-I hashing selected		0
88	Expansion field		@

@) Changes to 0 or 1 according to a status of devices.

(12) Octet 15

bit	Function	Contents	Default
89	Alternative hashing system number 2 selected		0
90	Alternative hashing system number 3 selected		0
91	Reserved		0
92	T.44 (Mixed raster content)		0
93	T.44 (Mixed raster content)		0
94	T.44 (Mixed raster content)		0
95	Page length maximum strip size for T.44 (Mixed raster content)		0
96	Expansion field		@

@) Changes to 0 or 1 according to a status of devices.

(13) Octet 16

bit	Function	Contents	Default
97	Color/gray-scale 300 pels/25.4 mm x 300 lines/25.4 mm or 400 pels/25.4 mm x 400 lines/25.4 mm resolution		0
98	100 pels/25.4mm x 100 lines/25.4 mm for color/gray scale		0
99	Simple phase C BFT negotiations capability		0
100		0: Fixed	0
101		0: Fixed	0
102	Internet routing address (IRA) Transmission		0
103	Reserved		0
104	Expansion field		@

@) Changes to 0 or 1 according to a status of devices.

(14) Octet 17

bit	Function	Contents	Default
105	600 pels/25.4 mm x 600 lines/25.4 mm		@
106	1200 pels/25.4 mm x 1200 lines/25.4 mm		0
107	300 pels/25.4 mm x 600 lines/25.4 mm		0
108	400 pels/25.4 mm x 800 lines/25.4 mm		0
109	600 pels/25.4 mm x 1200 lines/25.4 mm		0
110	Color/gray-scale 600 pels/25.4 mm x 600/25.4 mm resolution		0
111	Color/gray-scale 1200 pels/25.4 mm x 1200/25.4 mm resolution		0
112	Expansion field		0

@) Changes to 0 or 1 according to a status of devices.

(15) Octet 18

bit	Function	Contents	Default
113	Double sided printing selected (alternate mode)		0
114	Double sided printing selected (continuous mode)		0
115		0: Fixed	0
116	T.45 (run length color encoding)		0
117	Shared date memory required	bit 117,118 0,0=not used 0,1= Level 1=1.0 Mbytes 1,0= Level 2=2.0 Mbytes 1,1= Level 3=unlimited (i.e. 32 Mbytes or more)	0
118			0
119	Reserved		0
120	Expansion field		0

(16) Octet 19

bit	Function	Contents	Default
121	Flow control capability for T.38 communication		0
122	K > 4		0
123	Internet aware fax device operating in T.38 mode		0
124	T.89 (Application profiles for ITU-T T.88)	Refer to *3.	0
125			0
126			0
127	sYCC-JPEG coding		0

***3: T.89 (Application profile for ITU-T T.88)**

124	125	126	Contents
0	0	0	Not used
0	0	1	Profile 1
0	1	0	Profile 2
0	1	1	Profile 3
1	0	0	Invalid
1	0	1	Reserved
1	1	0	Reserved
1	1	1	Reserved

1.2 Modem fallback sequence

- Fallback sequences of TCF and CTC are shown as follows:

1.2.1 V17, V29, and V27 ter

Ability of a remote station	TCF fallback sequence
V27 ter/V29	96/V.29 -> 72/V.29 -> 48/V.27 ter -> 24/V27 ter
V27 ter/V29/V33 V17	144/V.17 -> 120/V.17 -> 96/V.17 -> 72/V.17 -> 48/V.27 ter -> 24/V27 ter

- On the transmission side: If PPR is received four times, a modem is set in the fallback state.
- On the reception side: In case of sending PPR, when the number of error frames exceeds the FP value, a modem is set in the fallback state.

1.2.2 V34

- Line quality is always water by modem. Optimum speed is automatically selected on-the-fly.

1.3 V8/V34 sequence

1.3.1 V34

(1) Outline

- The 33.6kbps data transmission method and protocol including the V8 protocol. As for each of full-duplex and half-duplex, startup handshake until data transmission starts is divided into four phases, phase1 to 4, and signals used in each phase are regulated.

(2) Features

- Full-duplex (echo canceler method) / Half-duplex method are regulated (for data / FAX respectively)
- 2400, 3000 and 3200 symbols / sec (mandatory) and 2743, 2800 and 3429 symbols / sec (option) QAM synchronous transmission at each symbol rate
- Communication at each signal rate of 33600, 31200, 28800, 26400, 24000, 21600, 19200, 16800, 14400, 12000, 9600, 7200, 4800 and 2400 bps
- Four-dimensional-symbol trellis coding
- A 200bps sub channel which can be used as an asynchronous second channel (option)
- Negotiation in which characteristics of a line is measured before transmission starts and the maximum communication speed is achieved by finely adjusting the transmission parameter, based on the result of measurement (carrier / frequency / equalizer / symbol rate / level, etc.)
- Data transmission in the super frame with the hierarchical structure

1.3.2 Sample of a signal procedure at sending two pages

(1) Beginning of communications to beginning of 1st page transmission

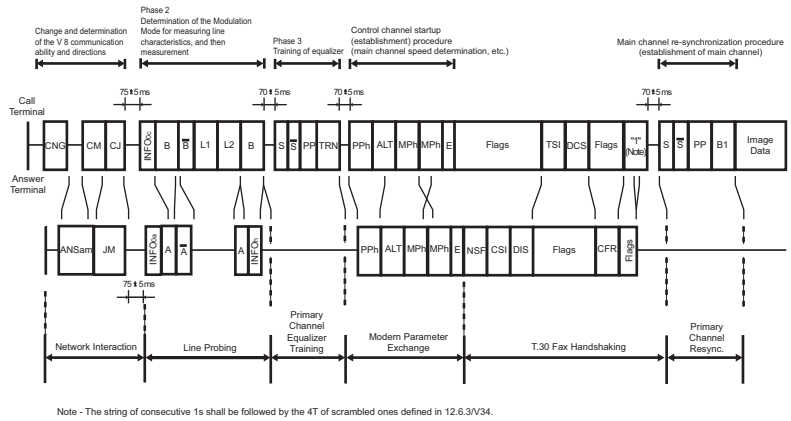

Note - The string of consecutive 1s shall be followed by the 4T of scrambled ones defined in 12.6.3/V34.

(2) Signals between pages

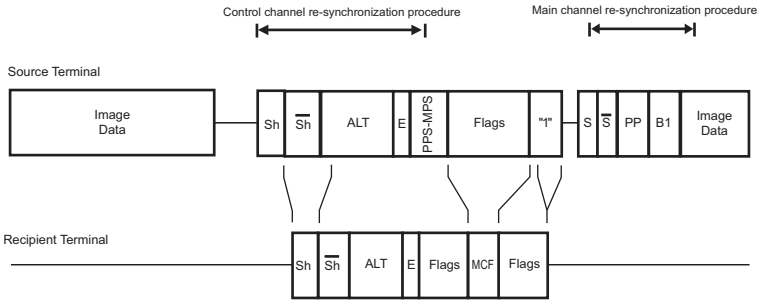

(3) 2nd page transmission termination to communication termination

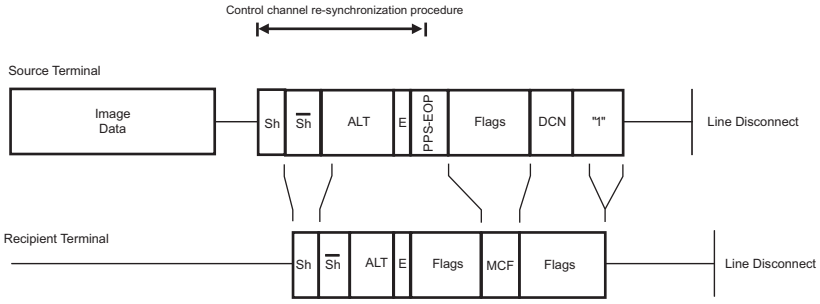

Note - Some terminals may disconnect the line immediately after sending DCN without sending consecutive 1s.

1.3.3 Procedure details

(1) Phase 1 (V8) ....Beginning of connection between a calling modem and a called modem

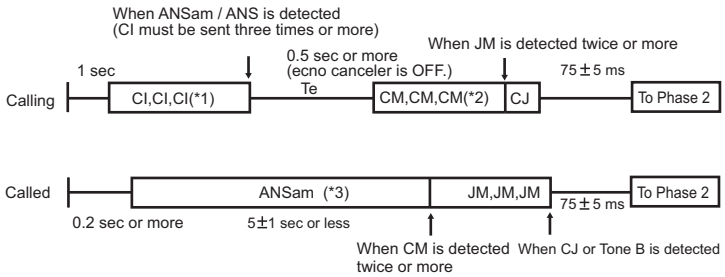

- *1: One of no signals / C1 / CNG (T.30) / CT (V.25)
- *2: V.34 full-duplex ability in the modulation mode bit is ON.
- *3: ANSam of phase inversion is sent. Phase inversion is an option in case of supporting only half-duplex. When CM or valid signal from the calling side is not detected, the procedure is moved to T.30, etc. after 75 ± 5 ms interval.

(a) Signal Definition

Signal type	Meaning	Signal direction call called	Signal speed	Timing of transmission
CI (Call indicator)	Function display on the calling side	→	V21(L) (300 bps)	Start: after 0.4 seconds after line connection from ON condition (in the following format) Stop: when 3 period or more has passed after ANSam / ANS is detected 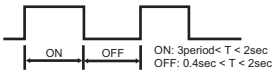
	[Comments] • CI is a signal to carry call function. • The calling side send CI, CT (Call Tone - V25) or CNG. • CI transmission and detection are optional. • The ON minimum time (=3 Period) is of duration of three CI signals in the following format.			
ANSam (Modified Answer Tone)	V.8 procedure on the called side	←	-	When 0.2 seconds or more has passed after reception
	[Comments] • Essential for a called machine which supports the V8 procedure. • 2100 Hz sine wave is phase-inverted by 400 +/-25 ms periods, then amplitude modulated by 15 +/-0.1 Hz sine wave • Average value of modulation factor (x) 0.8 +/- .01 < x < 1.2 +/- .01 • Average transmission power compliant to V2 • 2100 +/- 200 Hz external power is smaller than the average power by 24 dB or more.			
CM (Call Menu)	Modulation mode etc. on the calling side	→ (300 bps)	V.21(L)	Start: Te (0.5 sec. ≤ Te ≤ 1 sec.) has passed after CI transmission stops Stop: When two or more JM are detected
	[Comments] • CM is a signal which carries call function, modulation modes, protocols and GSTN access. • The first information category is call function. • Protocols and GSTN access category are added when the calling side has ability and when needed to inform to a remote station.			
CJ	CM termination	→ (300 bps)	V.21(L)	When CM is completed
	[Comments] • START bit (0) and STOP bit (1) are added to 1 octet of all bit 0. • Signal format Start bit: 0 — b0 b1 b2 b3 b4 b5 b6 b7: 0 0 0 0 0 0 0 0 — Stop bit: 1			
JM (Joint Menu)	Display of common ability on both calling and called sides	← (300 bps)	V.21(H)	Start: When two or more same CM are received Stop: When CJ is received or receives a signal matching the selected Modulation Mode from the calling side
	[Comments] • JM is a response signal to CM and of the same format as the received CM. • The fist information category is Call Function as same as CM. • Modulation mode sets the common bit on calling and called sides and sends by the same octet as received CM. • When there is no common ability, all bits are set to 0 and send by the same octet as received CM. • The minimum item No. is selected from the common bits to determine the actual Modulation Mode. • Protocol is added when it is included in received CM and needed to instruct. • GSTN access is added when it is included in received CM and needed to instruct. • Bit 6 is set to ON when needed to show ability. Bit 5 is set to the same one as received CM			

(b) Signal format

1. Preamble: a signal added before each signal when CI, CM and JM signals are sent.
   - Format: 1111111111 +0000000001 (for CI)
   - Format: 1111111111 +0000001111 (for CM and JM)
2. Common format among each signal CI, CM and JM
   - Start Bit (=0) is put at the top and Stop Bit (=1) is put at the end of each octet.

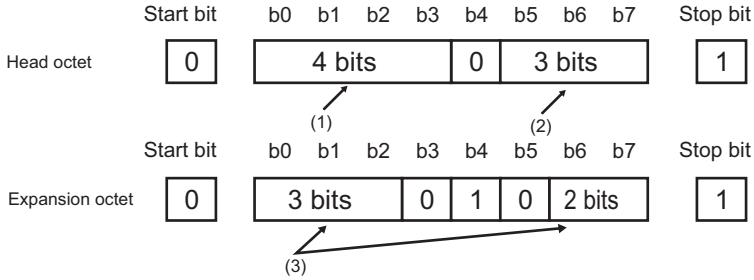

- (1): Category tag (tags which represent information types)

Bit assignment					Meaning (information type)	Included signal
b0	b1	b2	b3			
1	0	0	0	...	Call Func	Top of CM, JM / CI
1	0	1	0	...	Modulation Mode	CM / M
0	1	0	1	...	Protocols	CM / M
1	0	1	1	...	GSTN access	CM / M
0	1	1	0	...	PCM modem ability	CM / JM

- (2): Option bit (Differs depending on category tags. See "PJ.1.3.4 Common signal bit definition".)
- (3): Additional option bit (Differs depending on category tags. See "PJ.1.3.4 Common signal bit definition".)

1.3.4 Common signal bit definition

(1) Call function (1 octet)

Top octet

b0	b1	b2	b3	b4	b5	b6	b7	Meaning
1	0	0	0	0				(Call Function category tag)
					0	0	0	Defined by ITU-T
					1	0	0	PSTN multi-media terminal
					0	1	0	V18 text phone
					1	1	0	Video tex
					0	0	1	FAX transmission from the calling terminal
					1	0	1	FAX reception in the calling terminal
					0	1	1	Data transmission / reception
					1	1	1	Expansion octet = with call function represented by next octet

(Other than the above = Reserved)

(2) Modulation mode (3 octets)

1st octet

b0	b1	b2	b3	b4	b5	b6	b7	Meaning	Item No.
1	0	1	0	0				(Modulation mode category tag, b4 = 0 is first octet)	
					0/1			PCM modem ability disabled/enabled	
						0/1		V34 full-duplex ability disabled/enabled	1
							0/1	V34 half-duplex ability disabled/enabled	2

2nd octet

b0	b1	b2	b3	b4	b5	b6	b7	Meaning	Item No.
			0	1	0			(b3, 4 and 5=0, 1, 0 means expanded oct.)	
0/1								V32bis / V32 ability disabled / enabled	3
	0/1							V22bis / V22 ability disabled / enabled	4
		0/1						V17 ability disabled / enabled	5
						0/1		V29 half-duplex ability disabled / enabled (used in T.30)	6
							0/1	V27ter ability disabled / enabled	7

3rd octet

b0	b1	b2	b3	b4	b5	b6	b7	Meaning	Item No.
			0	1	0			(b3, 4 and 5=0, 1, 0 means expanded oct.)	
0/1								V26ter ability disabled / enabled	8
	0/1							V26bis ability disabled / enabled	9

b0	b1	b2	b3	b4	b5	b6	b7	Meaning	Item No.
		0/1						V23 full-duplex ability disabled / enabled	10
						0/1		V23 half-duplex ability disabled / enabled	11
							0/1	V21 ability disabled / enabled	12

(3) Protocols (1 octet)

Protocols (1 octet)

b0	b1	b2	b3	b4	b5	b6	b7	Meaning
0	1	0	1	0				(Protocols category tag)
					1	0	0	V42 LAPM protocol
					1	1	1	Protocol represented by expanding octet

(4) GSTN access (1 octet)

GSTN access (1 octet)

b0	b1	b2	b3	b4	b5	b6	b7	Meaning
1	0	1	1	0				(GSTN access category tag)
					0/1			Celluler connection in the calling side
						0/1		Celluler connection in the called side
							0/1	0: Analog network connection 1: Digital network connection

(5) PCM modem capability (1 octet)

b0	b1	b2	b3	b4	b5	b6	b7	Meaning
1	1	1	0	0				(PCM modem category tag)
					0/1			V.90 analog modem capability
						0/1		V.90 digital modem capability
							0/1	V.91 capability

1.3.5 Phase 2 (Probing) ..... V.34 basic setting

- Exchange of modulation ability
- Measurement of line characteristics (bi-direction)
- Determination and exchange of compensation values to line characteristics (compensation values of maximum data rate, transmission level, pre-emphasis (*))
  - *: linear equalizer for compensating amplitude distortion

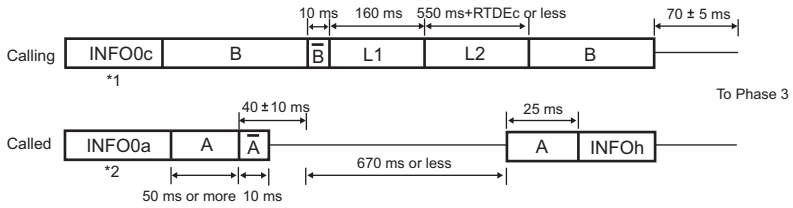

A	2400 Hz tone signal output from the called side (Level is a set value -1dB). 1800 Hz guard tone (Level is a set value -7dB) is output simultaneously from the called side.
$\bar{A}$	2400 Hz tone signal output from the called side (Phase inversion of A). 1800 Hz guard tone.
B	1200 Hz tone signal output from the called side
$\bar{B}$	1200 Hz tone signal output from the calling side (Phase inversion of B)
INFO 0x	Binary signal for indicating auto modulation option signal (x=a/c: a: called side, c: calling side)
L1, L2	Signal for conditioning line characteristics (tone synthesis at the interval of 150 Hz from 150 to 3750 Hz (except for 900, 1200, 1800 and 2400 Hz)) L1: 160ms, Level= Set value+6dB L2: Maximum 550ms+TRDEx, Level = Set value
INFO h	Binary signal for indicating parameters used in Phase 3 (training of main channel equalizer). This signal is sent from a modem receiving main channel data to a transmitting modem.

- *1: INFO 0c Bit28 OFF
- *2: INFO 0a Bit28 OFF

<INFO 0x Bit Assignment>

Bits (LSB-MSB)	Value	Meaning
0-3	1111	Fill Bits

Bits (LSB-MSB)	Value	Meaning
4-11	01110010	Bit string for frame synchronization
12	0/1	2743 symbol / sec support
13	0/1	2800 symbol / sec support
14	0/1	3429 symbol / sec support
15	0/1	Ability to transmit at low carrier frequency at 3000 symbol / sec
16	0/1	Ability to transmit at high carrier frequency at 3000 symbol / sec
17	0/1	Ability to transmit at low carrier frequency at 3200 symbol / sec
18	0/1	Ability to transmit at high carrier frequency at 3200 symbol / sec
19	0/1	3429 symbol / sec transmission
20	0/1	Ability to lower the transmission level than a preset value
21-23	0 to 5	Maximum tolerance of symbol rates between transmission and reception 0: 2400, 1:2743, 2:2800, 3:3000, 4:3200, 5:3429 symbol / sec
24	0/1	1=INFO 0 is sent from the CME modem
25	0/1	1664 signal point (33.6 K) ability
26-27	0 to 3	Clock source transmission 0: internal, 1: external, 2: synchronous to the reception clock, 3: Reserved
28	0/1	1=Correct INFO 0 frame is received during error recovery
29-44		CRC
45-48	1111	Fill Bits

<INFO h Bit Assignment>

Bits (LSB-MSB)	Value	Meaning
0-3	1111	Fill Bits
4-11	01110010	Bit string for frame synchronization (transmitted from the left side)
12-14	0 to 7	Output reduction width demanded by the reception modem (dB) When *the modem on the transmitting side can not reduce output* at INFO 0, the value is set to 0.
15-21	0 to 127	The length of TRN which the modem of the transmitting side send in the Phase 3 (x 35 ms)
22	0/1	High carrier is user for data mode Tx.
23-26	0-10	Pre-emphasis filer index No.which is used for data transmission
27-29	0-5	Symbol rate of data transmission 0: 2400 ... 5: 3429 (symbol / sec)
30	0/1	Selection of parameters used for TRN. 4 points / 16 points
31-46		CRC
47-50	1111	Fill Bits

1.3.6 Phase 3 .....Training of the main channel equalizer

- Band division full-duplex method
- Transmission and reception of Phase 3 signals (S, $\overline{S}$, PP, TRN) are executed by using parameter values which are determined by exchanging INF Oh. (symbol rate, carrier frequency, pre-emphasis filter and transmission level)

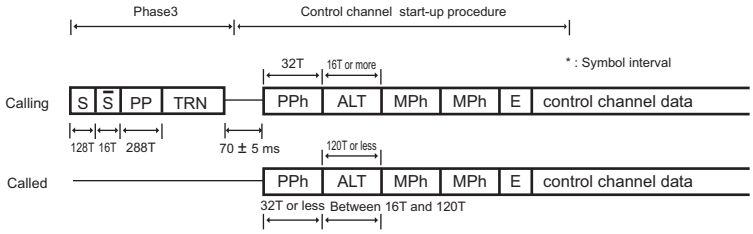

- The speed of the following signals (Phase 3) are determined by INFOh. (The following signals are used in the main channel in the half-duplex procedure.)

S	Signal which sends alternately 0 point and a point which rotated 0 point counterclockwise by 90 degrees
$\overline{S}$	Signal which sends alternately a point which rotated 0 point counterclockwise by 180 degrees and a point which rotated 0 point counterclockwise by 270 degrees
PP	Special signal which is sent from a remote station for adjusting an equalizer
TRN	Training signal. (Symbol rate and duration are determined in INFOh.)

(1) Control channel signal

- The following signals are used for establishing the control channel or re-synchronization and retrain. (peculiar to half-duplex procedure)

Modulation method	1200 / 2400bps QAM modulation (600 ± 0.01 symbols / sec). However, training and synchronous signals are 1200bps. Calling modem: Carrier (=1200Hz ± 0.01% (level = set value)) Called modem: Carrier (=2400Hz ± 0.01% (level = set value-1dB)) + Guard tone (=1800Hz ± 0.01% (level = set value-7dB))

Sh	Signal which sends alternately 0 point and a point which rotated 0 point counterclockwise by 90 degrees (the same as S)
$\overline{Sh}$	Signal which sends alternately a point which rotated 0 point counterclockwise by 180 degrees and a point which rotated 0 point counterclockwise by 270 degrees (the same as S)
AC	Signal which send alternately 0 point and a point which rotated 0 point by 180 degrees
PPh	Special signal which is sent from a remote station for adjusting an equalizer (used when the initial of the control channel and re-synchronization are executed)
ALT	Signal which scrambled alternate signals of 0 and 1 (1200bps)
MPh	Binary signal used for exchanging parameters of the modulation method when data is actually sent and received by using the main channel (Both type 0 and type 1 (type 0+pre-recording coefficient) must be received.) (When type 0 is received, pre-recording coefficient is considered to be 0 and never functions.)
E	“1”, binary of 20 bit, which represents the beginning of user data transmission on the control channel

(2) MPh (type 0) bit assignment

Bits (LSB-MSB)	Value	Meaning
0-16	All bit 1	Bit string for frame synchronization
17	0	Start bit
18	0	MP signal type
19	0	Reserved
20-23	1 to 14	Maximum transmission rate from the calling modem to the called modem (x 2400) *1
24-26	0,0,0	Reserved
27	0/1	Control channel data transmission rate which is selected by the opposed transmitter 1200bps / 2400 bps
28	0	Reserved
29-30		Trellis coding device selection *2 (00: 16 state, 10: 32 state, 01: 64 state and 11: Reserved)
31	0/1	Non-linear encoder parameter selection for the terminal transmitter of a remote station *2 (0: φ=0, 1: φ0.3125)
32	0/1	Parameter (shaping) selection when the data rate is determined within each symbol rate *2 (0: Minimum, 1: Expanded)
33	0	Reserved
34	0	Start bit
35-49		Communication speed mask (0/1=Ability of both modems disabled / enabled) (Bit35=2400 bps ... Bit46=28.8 kbps, Bit47=31.2 kbps, Bit48=33.6 kbps and Bit49=Reserved)
50	0/1	Use of control channel imbalance data rate No / Yes
51	0	Start bit
52-67	0	Reserved
68	0	Start bit
69-84		CRC
85-87	0,0,0	Fill Bits

- *1: 13 and 14 are used when the opposed modem supports up to 1664 points
- *2: Set to 0 on the transmitting modem.

(3) MPh (type 1) bit assignment

Bits (LSB-MSB)	Value	Meaning
0-16	All bit 1	Bit string for frame synchronization
17	0	Start bit
18	1	MP signal type
19	0	Reserved
20-23	1 to 14	Maximum transmission rate from the calling modem to the called modem (x 2400) *1
24-26	0,0,0	Reserved
27	0/1	Control channel data transmission rate which is selected by the opposed transmitter 1200bps / 2400 bps
28	0	Reserved
29-30		Trellis coding device selection *2 (00: 16 state, 10: 32 state, 01: 64 state and 11: Reserved)
31	0/1	Non-linear encoder parameter selection for the terminal transmitter of a remote station *2 (0: φ =0, 1: φ0.3125)
32	0/1	Parameter (shaping) selection when the data rate is determined within each symbol rate *2 (0: Minimum, 1: Expanded)
33	0	Reserved
34	0	Start bit

Bits (LSB-MSB)	Value	Meaning
35-49		Communication speed mask (0/1=Ability of both modems disabled / enabled) (Bit35=2400 bps ... Bit46=28.8 kbps, Bit47=31.2 kbps, Bit48=33.6 kbps and Bit49=Reserved)
50	0/1	Use of control channel imbalance data rate No / Yes
51	0	Start bit
52-67		Pre-coding coefficient h(1) Real
68	0	Start bit
69-84		Pre-coding coefficient h(1) Imaginary
85	0	Start bit
86-101		Pre-coding coefficient h(2) Real
102	0	Start bit
103-118		Pre-coding coefficient h(2)Imaginary
119	0	Start bit
120-135		Pre-coding coefficient h(3) Real
136	0	Start bit
137-152		Pre-coding coefficient h(3)Imaginary
153	0	Start bit
154-169		Reserved
170	0	Start bit
171-186		CRC
187	0	Fill Bits

- *1: 13 and 14 are used when the opposed modem supports up to 1664 points
- *2: Set to 0 on the transmitting modem.

1.3.7 Re-synchronization procedure / Startup procedure

- A procedure required to switch control channel and main channel in the half-duplex procedure
- A procedure which includes another modulation parameter exchanging is especially called the startup procedure. (used for changing the communication speed)

(1) Startup procedure

- Control channel startup procedure (By exchanging MPh, the communication speed is changed.)
- “Control channel re-synchronization procedure” is not used.

(2) Re-synchronization procedure

- Control channel re-synchronization.
- See signals related to control channels for signal names and change method.

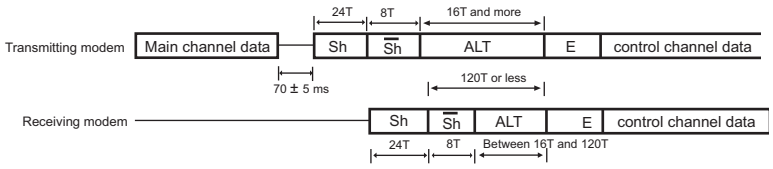

Main channel re-synchronization procedure and Turn-off

- The receiving modem re-synchronizes the main channel by using the PP signal. After B1, starts receiving Primary Data.
- The transmitting modem sends the scrambled 1’s for 35ms after Primary Data transmission has been completed.
- Both modems move to the control channel re-synchronization procedure or the control channel startup procedure.

S	Signal which sends alternately 0 point and a point which rotated 0 point counterclockwise by 90 degrees
$\overline{S}$	Signal which sends alternately a point which rotated 0 point counterclockwise by 180 degrees and a point which rotated 0 point counterclockwise by 270 degrees
PP	Special for adjusting an equalizer
B1	High-speed signal of one frame length which is sent at the end of a series of startup sequence in the selected modulation parameter.

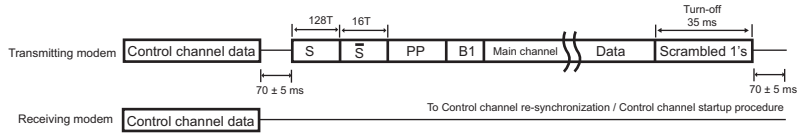

1.3.8 Others

(1) Minimum reception signal level (RLSD) (half-duplex mode only)

- The reception circuit is turned to ON when the signal becomes 43 dBm or more.

- When the signal becomes 48 dBm or less, the reception circuit is turned OFF within 20 to 25ms after it has exceeded the thresh old.

(2) Data frame structure

- All data transmitted in V.34 (after the Phase 4) is treated in the following frame format.
  - J: The number of data frames within one super frame
  - P: The number of mapping frames within one data frame

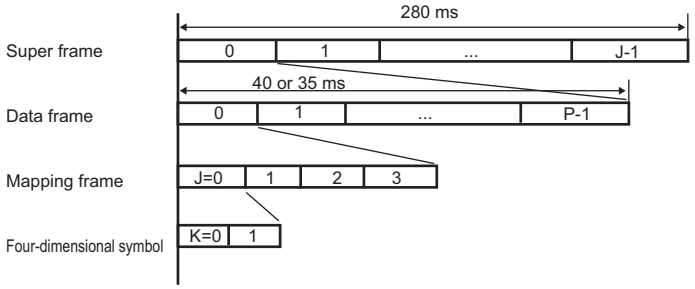

Modulation Speed	J	P
2400 baud	7	12
2743 baud	8	12
2800 baud	7	14
3000 baud	7	15
3200 baud	7	16
3429 baud	8	15

2. FUNCTION

2.1 Telephone function

2.1.1 TEL/FAX switching

(1) Outline

- A function to switch telephone and FAX automatically after reception. Depends on Country spec.

(2) Operation

1. When CNG is not detected for 2 seconds (or 4 seconds, following parameter) after line seizure, this function sends voice response message 1 and continues CNG detection.
2. If voice response 1 is sent and CNG detection is continued for 4 seconds but could not be detected, external ringer is sent to the externally installed phone.
3. When CNG is not detected for a given period (Default is 20 seconds. Changeable by address parameters), this function stops external ringer transmission and becomes fax reception after the voice response message 2 is sent.
4. This function detects OFF-HOOK of the external telephone during external ringer transmission only.
5. When OFF-HOOK of the external telephone is detected during external ringer transmission, the line is connected to the external telephone. Even if you use the telephone, you can manually switch to the fax reception after that.
6. When CNG is detected during the above-mentioned external ringer transmission, External ringer transmission is stopped and the fax reception starts.

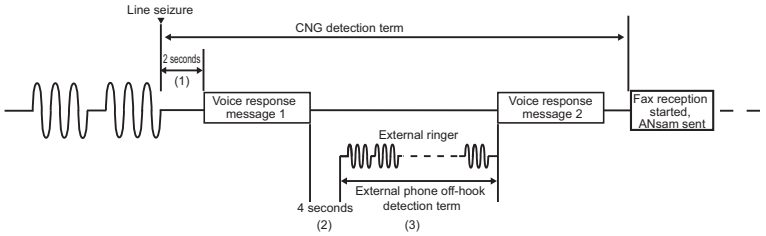

No.	FP	Meaning and purpose	Address	Value	Default	Note
1	Tel-Fax switching	External telephone off-hook detection function	0x0e0095 bit5	0: No 1: Normal (RBT transmission)	0	Those with a Administrator Settings
2	RBT transmission time	External ringer transmission time (3) (in steps of 1 second)	0x0e00eb	unit: 1000 ms, HEX	0x14 (20 sec.)	A serviceman setting by address setting
3	Tel-Fax switching parameter	Time from vocal response to RBT transmission (CNG detection waiting time 2)	0x0e0095 bit7	0: 2 sec 1: 4 sec	0	Same as the above
4	Tel-Fax switching parameter	Time from reception to voice response transmission (CNG detection waiting time 1)	0x0e0095 bit6	0: 4 sec 1: 2 sec	0	Same as the above
5	Tel-Fax switching parameter	TEL/FAX switching ON response details	0x0e0095 bit3	0: Voice response + RBT transmission 1: RBT transmission only	0	Same as the above

2.2 F-code

- F-code is a function to realize confidential transmission / bulletin board polling / relay transmission by using SUB, SEP and SID signals.
- To be more specific, a machine which can open “a box” on the memory is called “a F code compliant center machine” and a machine which can access to a center machine by using the F code function is called “a F-code compliant machine.” The center machine can have plural “boxes” and they are used as the confidential box, bulletin board box and relay box respectively.

Function	Outline	Signals to be used			Use (Meaning)	Required function	Remarks
		SUB	SEP	SID			
Confidential transmission	Sent to the center machine which opens a confidential box by appointing the confidential box No. (The center machine has memory reception to the confidential box.)	Used	Not	Optional	SUB = Appointment of a confidential box SID = Password	Registration = Message adding	Each box No. = Contents of a signal (20 digits or less)
Bulletin board polling	By appointing a box No. in the center machine which opens a bulletin board, contents are polled.	Not	Used	Not	SUB = Appointment of a bulletin board box	Registration = Message overwriting With a mode which is not deleted by polling	

Function	Outline	Signals to be used			Use (Meaning)	Required function	Remarks
		SUB	SEP	SID			
Relay transmission	Requesting relay to the relay machine which opens a relay box (No.) in which a broadcasting transmission remote station is registered.	Used	Not	Used	SUB = Appointment of a relay box (No.) SID = Password		

2.2.1 Signal format

(1) Contents of signals

Item / Signal Name	SUB/SEP	SID
Characters	0 to 9 only (* and # must not be used.)	0 to 9, * and #
Contents	Box No.	Password
No. of digits	Arbitrary between 1 and 20	
Space between digits	Prohibited	
Others	Impossible to designate more than one box	

(a) FIF (SUB/SEP/SID) common

- The last digit is left-justified. The remaining are filled with space (0x20)

eg.) 12345

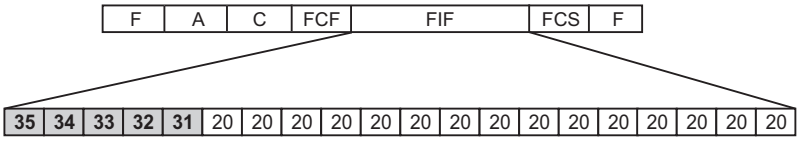

(2) DIS/DTC/DCS bit condition

Bit No.	Meaning	DIS/DTC	DCS
47	Selective polling ability	DIS = ON when SEP reception is possible DTC = ON when SEP is transmitted	0: fixed
49	Sub address ability / function	ON when SUB reception is possible	ON when SUB transmission is possible
50	Password / sender ID	DIS = ON when SID reception is possible DTC = ON when SID is transmitted	ON when SID is transmitted

2.2.2 F-code confidential transmission

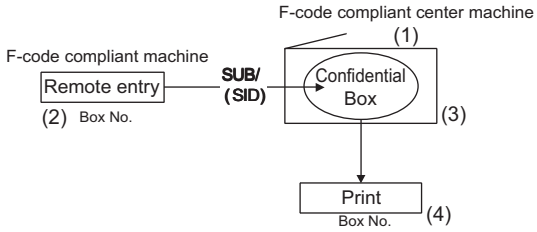

1. The confidential box is registered in the center machine.
   - Registration of confidential box No. and name
   - Registration of communication password
   - Registration of box password
2. Transmission operation on the transmitting side
   - Specification of confidential box No.
3. Reception in the center machine
   - Automatic output of confidential communication report
4. Printing in the center machine
   - Output by entering an access protect No.

(1) BOX specifications

Confidential box No.	Represented by a nine digit number. Operationally between 1 and 999999999. You can not open the same box number as the bulletin board No. which has been already opened.
Communication password	Possible to use.

Confidential BOX name	Possible to resister up to 20 characters.
Erased at printing	Erased on every page after output.
Box password	Represented by eight digit number between 00000000 and 99999999.
No. of files in confidential box	100 files at the maximum including bulletin board.

(2) Example of the protocol sequence

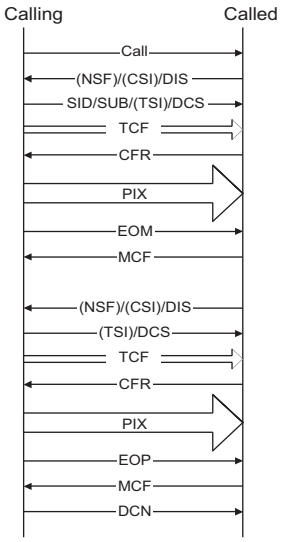

2.2.3 F-code bulletin board polling

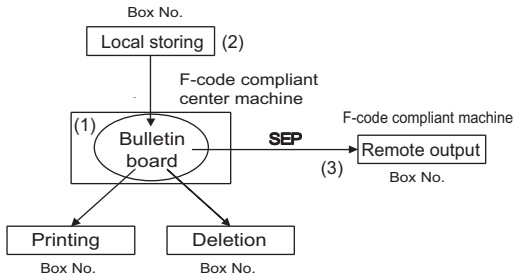

1. Registration of the bulletin board box in the center machine
   - Registration of the bulletin board No. and name
2. Storing documents in the bulletin board
3. Operations for polling reception on the compliant machine
   - Appointment of bulletin board No.

(1) BOX specifications

Bulletin board box No.	Represented by a nine digit number. Operationally between 1 and 999999999. You can not open the same box number as the confidential box which has been already opened.
Bulletin board password	No
Bulletin board box name	Yes 10 character max
Erased at printing	Not erased when printed.
Erased at polling	Not erased when polled.
Access protect No.	No
No. of document registration to the bulletin board box	Only once. If already exist, it is overwritten.

(2) Example of protocol sequence

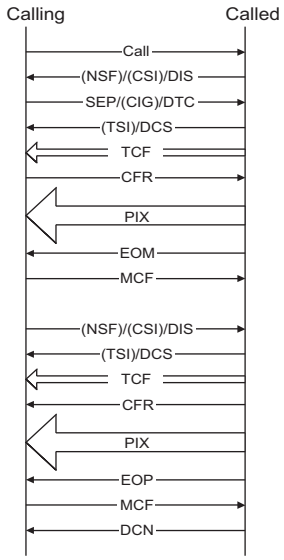

2.2.4 F-code relay transmission

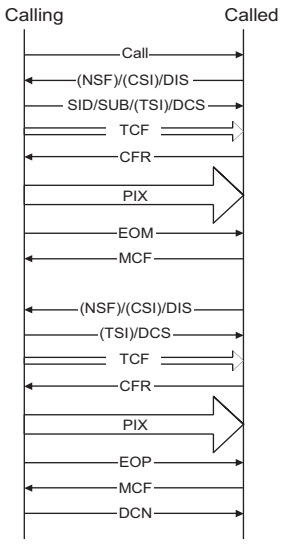

NOTE

- **This machine is only relay requests and do not function as a relaying station.**

1. The relay box is registered in the relaying station.
   - Registering relay box No., relay password and relay group No.
2. Registration of group
   - Registering final destinations in the group No.
3. Transmission operation in the relay requesting station
   - Instructs relay box no. and relay password.
4. Transmission to the final remote stations registered in the group
5. Possible to printed relayed documents on the relaying station (depends on the parameter setting)

(1) BOX specifications

Relay box	Possible to register up to 5.
Relay box No.	Any box number that can range between 1 and 999999999
Relay password	Any 8-digit number
Relay BOX name	To be assignable
Access protect No.	No
Final destination designation	Possible only to register in the relay box by appointing the group.
File erasure after transfer	Always erased
Conditions to erase box by operations	Only when there are no files of received messages in the relay box, box can be erased.

(2) Protocol sequence example

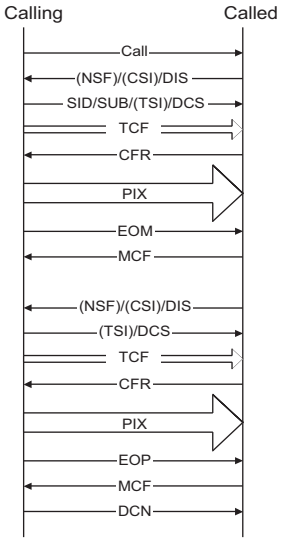

2.3 Transmission function

2.3.1 Original scan mode

- The original scan mode is roughly classified by the regular original scan and the irregular original scan.

Regular original	Irregular original	Mode selection
Normal mode	Irregular mode	Default setting
Mixed original mode		Scan setting

(1) Scan mode default setting

- The scan mode can be set by [Service Mode] -> [FAX] -> [Line1] -> [System] -> [Scan Setting]. The default is the irregular mode.

	Paper size detection	Default	Frame erasure
Irregular mode	Trailing edge detection	Yes	Trailing edge erasure may not be done.
Normal mode	DF paper size sensor	Automatically selected when using the page related application function (book transmission, etc.).	Frame erasure of all sides

2.4 Reception function

2.4.1 Reduction / division of reception

- Parameters related to reduction / division are set on the [Utility] -> [Administrator Settings] -> [Fax Settings] -> [TX/RX Settings]. There are two parameters as follows:
  - "Min. Reduction for RX Print": 96, 95, 94, ..., 87: a
  - "Print Separate Fax Pages": ON, OFF: b
- The reception recording mode is determined by the above-mentioned parameters, a and b.

(1) Auto reduction reception mode

- a = Don't care (except 100)
- b = OFF
- The received documents are automatically reduced in the range of 35 to 96 %.

(2) Page division recording reception mode

- a = 96, 95, ..., 87
- b = ON
- Documents are reduced to three reduction rate (90 %, 86 %, or 82 %) determined by the width of received documents and the selected recording paper. When they are still larger than a paper size, they are reduced to a value in "a" for the division recording.
  - 90% = Fixed value
  - 86%, 82% = Reduction rate determined by the main scanning direction
- The paper selection and division are determined in accordance with the following figure.

(3) Paper selected for division printing, magnification

(a) A4SEF width at reception

Original length=Received original size*(1/a)	Optimum paper	Selected paper size / Division operation							
		Priority 1	Priority 2	Priority 3	Priority 4	Priority 5	Priority 6	Priority 7	Priority 8
152mm or less	A5LEF	A5LEF / a %	A5SEF / 69 %	A4SEF / a %	A4LEF / a %	B5SEF / 84 %	B5LEF / a %	B4SEF / a %	A3SEF / a %
153 to 311mm	A4SEF	A4SEF / a %	A4LEF / a %	B4SEF / a %	A3SEF / a %	-	-	-	-
312 to 384mm	B4SEF	B4SEF / a %	B5LEF / a %	B5SEF / 84 %	A3SEF / a %	A4LEF / a %	A4SEF / a %	-	-
Over 384mm	A3SEF	A3SEF / a %	A4LEF / a %	B5SEF / 84 %	-	-	-	-	-

- a : Set magnification

(b) B4SEF width at reception

Original length=Received original size *(1/a)	Optimum paper	Selected paper size / Division operation							
		Priority 1	Priority 2	Priority 3	Priority 4	Priority 5	Priority 6	Priority 7	Priority 8
189mm or less	B5LEF	B5LEF / a %	B5SEF / 71 %	B4SEF / a %	A4SEF / 82 %	A4LEF / a %	A3SEF / a %	-	-
189 to 384mm	B4SEF	B4SEF / a %	B5LEF / a %	B5SEF / 71 %	A3SEF / a %	A4LEF / a %	A4SEF / 82 %	-	-
Over 384mm	A3SEF	A3SEF / a %	A4LEF / a %	A4SEF / 82 %	-	-	-	-	-

- a : Set magnification

(c) A3SEF width at reception

Original length=Received original size *(1/a)	Optimum paper	Selected paper size / Division operation							
		Priority 1	Priority 2	Priority 3	Priority 4	Priority 5	Priority 6	Priority 7	Priority 8
219mm or less	A4LEF	A4LEF / a %	A4SEF / 69 %	B4SEF / 85 %	A3SEF / a %	-	-	-	-
Over 219mm	A3SEF	A3SEF / a %	A4LEF / a %	A4SEF / 69 %	-	-	-	-	-

- a : Set magnification

2.4.2 Cassette / paper selection

- The cassette and paper selection is performed by using two parameters of the [Utility] -> [Administrator Settings] -> [Fax Settings] -> [TX/RX Settings].
  - "Print Paper Selection": Auto Select, Fixed Size, Priority Size: a
  - "Tray Selection for RX Print": Auto, Tray 1, Tray 2, Tray 3 and Tray 4: b

NOTE

- **When "b" is fixed to tray 1, 2, 3 or 4, "a" becomes invalid.**
- **Only when "b" is set to Auto, "a" becomes valid.**
- **Only A3, B4 and A4 sizes can be selected for the fixed size and preferential size modes.**
- **Bypass cannot be specified as fix-tray.**
- **Page dividing function becomes invalid when the tray is fixed.**

2.4.3 Compulsory memory reception

- The function to enable to print out by operations without printing out documents at reception in the FAX communications.

(1) Related settings

(a) Compulsory memory reception function

- Set in the [Service Mode] -> [FAX] > [Line1] -> [System] -> [Display Setting].
- When this setting is set to "OFF", display and actions related to the Compulsory memory reception are not performed. In addition, you can not perform operations. If this setting is not set, the following Compulsory memory reception function used is also set to disabled.

(b) Compulsory memory reception function use

- Set in the [Utility] -> [Administrator Settings] -> [Fax Settings] -> [Function Settings] -> [Memory RX Setting].
- When this setting is set to "NO", the compulsory memory reception actions are not performed at reception. In addition, you can not display, erase and print the compulsory memory reception documents. The compulsory memory reception documents are displayed on the main menu irrelevant to this setting.

(c) Compulsory memory reception password

- Within eight digits (eight-digit number)
- Set in the [Utility] -> [Administrator Settings] -> [Fax Settings] -> [Function Settings] -> [Memory RX Setting].
- This setting is required to display, delete or print the compulsory memory reception documents.

(2) Operation

(a) Necessary conditions for this function

- When there is the compulsory memory reception function, and it is used, the compulsory memory reception action is performed.

(b) Line seizure

- It is possible to receive up to 500 compulsory memory reception jobs including the normal reception and the substitute reception. When 500 compulsory memory reception jobs are received, machine will not catch the line. (Except the case that the polled transmission documents and bulletin board documents are registered.)

(c) Reception

- When the reception is performed in the compulsory memory reception mode, printing is not performed even with recording paper and the reception is performed in memory as the compulsory memory reception documents.
- The same as in the polled reception and manual reception.
- The auto forwarding setting is neglected in this mode, and the compulsory memory reception is performed.
- When SUB is received, related applications will start.

(d) Setting change

- When there are received compulsory memory reception documents, even if the compulsory memory reception setting is set to invalid in the utility mode, the compulsory memory reception file is not printed.
- For printing, the compulsory memory reception setting is required to be set to “ON.”

2.4.4 Closed reception (Junk FAX)

- The closed reception function used only at the time of the reception by using the F-code SID signal.

NOTE

- **You can not use this function with the F-code communications.**

(1) Closed reception function

- Set in the [Service Mode] -> [FAX] -> [Line1] -> [System] -> [Display Setting].

(2) Closed reception function use

- Set in the [Utility] -> [Administrator Settings] -> [Fax Settings] -> [Function Settings] -> [Closed Network RX].
- When this setting is set to “No”, the closed reception actions are not performed at reception.

(3) Closed reception password

- Four digits (Utility Mode setting, 0 to 9)
- Set in the [Utility] -> [Administrator Settings] -> [Fax Settings] -> [Function Settings] -> [Closed Network RX].

Q PARTS GUIDE MANUAL (1st Edition)

INFORMATION FOR PARTS GUIDE MANUAL

To find correct Parts No., refer to the “HOW TO MAKE THE BEST USE OF THIS MANUAL” in the following page.

NOTICE

- This parts guide manual is 1st edition and will not be updated. Please ask your parts administrator about the newest parts information.

HOW TO MAKE THE BEST USE OF THIS MANUAL

1. When you order, please check the proper figures beforehand that are on Our Parts Guide Manual, and order with the appropriate figures.
2. For screws, Nuts, Washers, retaining rings and Pins which are used in this model, one letter is shown on the Standard parts column of Parts list and exploded diagrams.
3. In order to maintain safety of the product, some specific parts composed of this product are set up as "essential safety parts".
4. The assigned parts number for the "essential safety parts" is indicated as "SP00-****".
   When replacing these parts, follow precautions for disassembling and installing which are listed in the Service Manual.
   Do not use any parts that are not set up as
5. ♣ means that there are exclusive parts for each destination.
   Please check the appropriate destination when you order.
6. Revision Mark
   Marked as ▲ on the illustration shows that the revision has been made.
7. All rights reserved. (any reprints or quotations are prohibited.)
   Use of this parts guide manual should be strictly supervised to avoid disclosure of confidential information.

SYSTEM OUTLINE

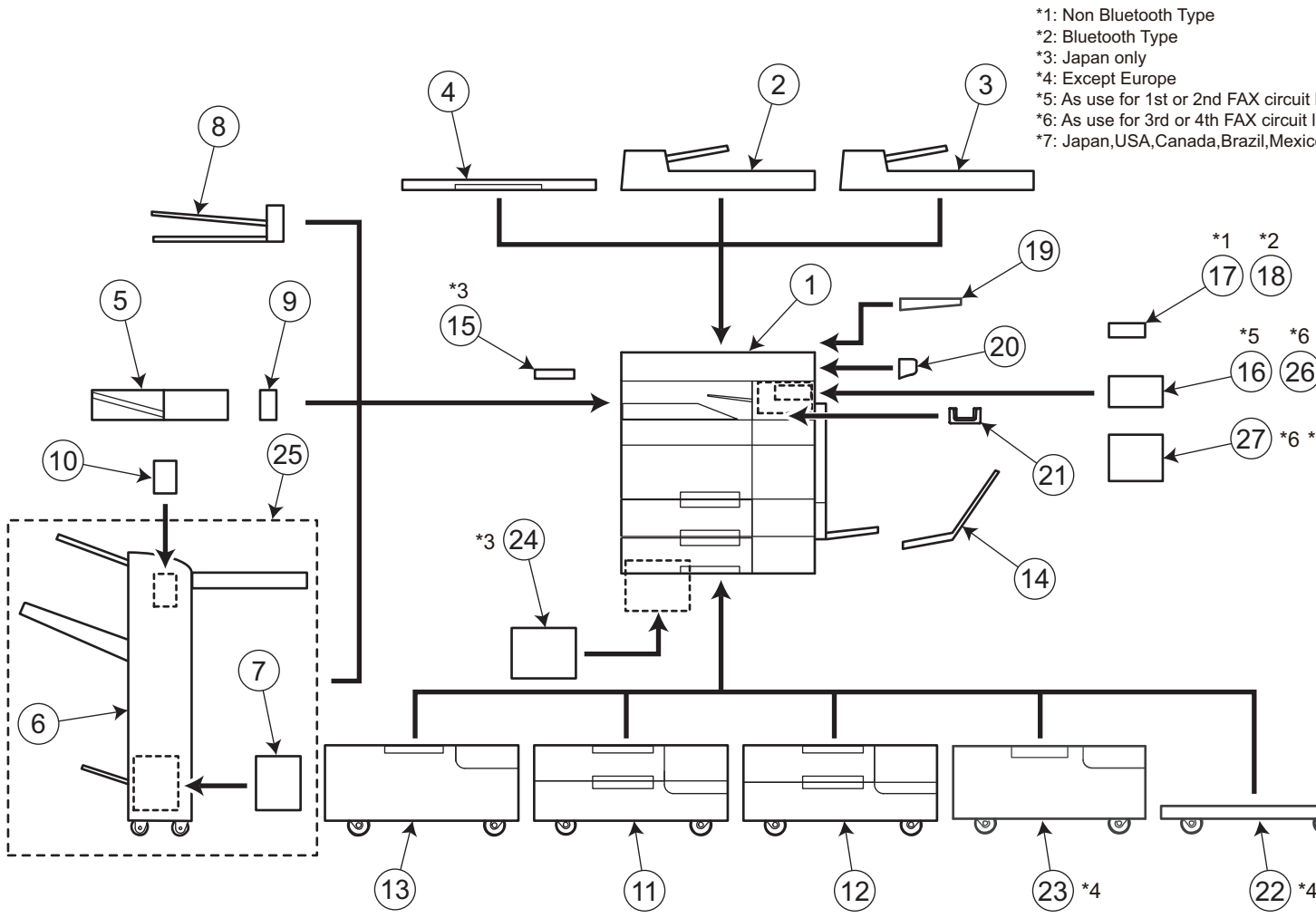

No.	Description	Model
1	Digital MFP B/W	bizhub 224e/bizhub 284e/bizhub 364e
2	Document Feeder	DF-624
3	Document Feeder	DF-701
4	Original Cover	OC-511
5	Finisher/Sorter	FS-533
6	Finisher/Sorter	FS-534
7	Saddle Unit	SD-511
8	Job Separator	JS-506
9	Punch Unit	PK-519
10	Punch Unit	PK-520
11	Paper Feeder	PC-110
12	Paper Feeder	PC-210
13	Paper Feeder	PC-410
14	Mount Kit	MK-730
15	Heater	HT-510
16	Fax Kit	FK-511
17	Local IF Kit	EK-606
18	Local IF Kit	EK-607
19	Working Table	WT-506
20	Other Option	KP-101
21	Mount Kit	MK-735
22	Desk	DK-705
23	Desk	DK-510
24	Other Option	MK-719

25	Finisher/Sorter	FS-534SD
26	Fax Kit	FK-508
27	Other Option	MK-728

1. DIGITAL MFP B/W (bizhub 224e/284e/364e)

DIAGRAMS OF MAIN PARTS SECTION

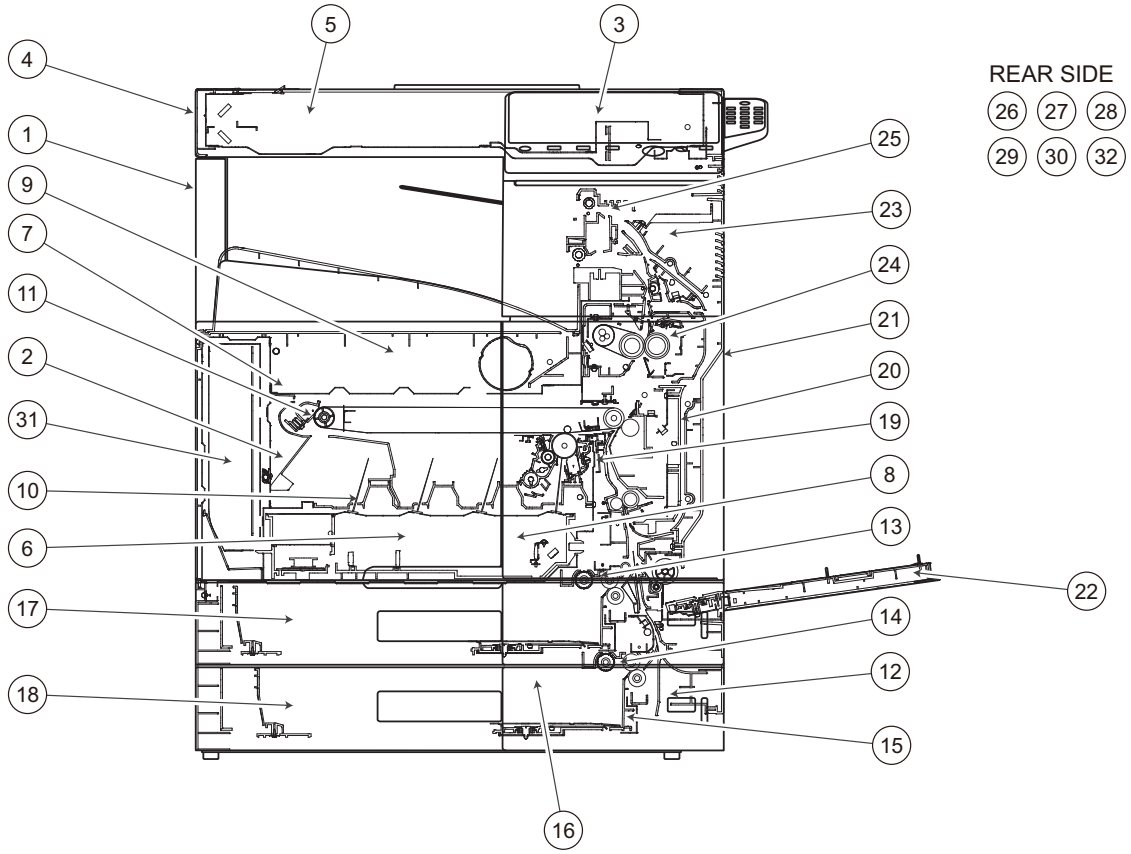

[1]	EXTERNAL PARTS	[2]	INNER COVER SECTION
[3]	OPERATION PANEL SECTION	[4]	IR COVER SECTION
[5]	SCANNER SECTION	[6]	PH UNIT
[7]	TONER SUPPLY SECTION	[8]	WASTE TONER BOX SECTION
[9]	ERASE LAMP SECTION	[10]	DV LOCK LEVER SECTION
[11]	TRANSFER UNIT	[12]	PAPER FEED SECTION
[13]	1ST PAPER FEED SECTION	[14]	2ND PAPER FEED SECTION
[15]	CASSETTE RAIL SECTION	[16]	PAPER SIZE DETECTION SECTION
[17]	1ST CASSETTE SECTION	[18]	2ND CASSETTE SECTION
[19]	CONVEYANCE SECTION	[20]	VERTICAL TRANSPORT SECTION
[21]	VERTICAL CONVEYANCE DOOR SECTION	[22]	BYPASS TRAY SECTION
[23]	REVERSAL UNIT	[24]	FUSING SECTION
[25]	PAPER EXIT SECTION	[26]	MAIN DRIVE/ PAPER FEED DRIVE SECTION
[27]	TONER BOTTLE DRIVE SECTION	[28]	FUSING DRIVE SECTION
[29]	OZONE DUCT SECTION	[30]	HIGH VOLTAGE SECTION
[31]	MAIN POWER SUPPLY SECTION	[32]	LECTRICAL COMPONENTS
[33]	WIRING	[34]	WIRING ACCESSORIES AND JIGS
[35]	CCESSORY PARTS	-	-

1.1 EXTERNAL PARTS

1.1.1 P1

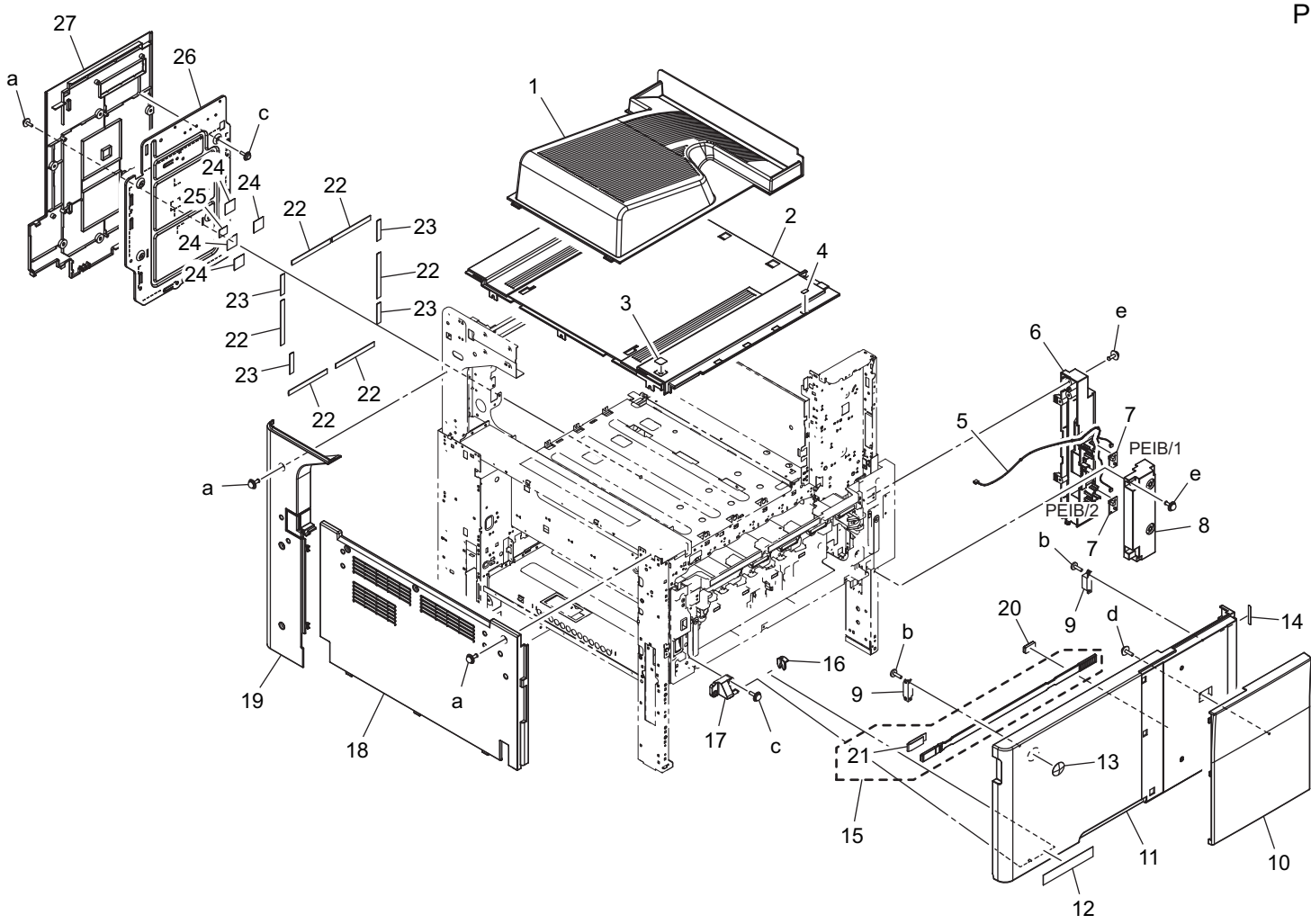

Page	Key	Parts No.	Description	Service Manual	Destinations	Class	Quantity
1	1	A161161001	Tray			C	1
1	2	A161160103	Cover /Upper			C	1
1	3	A0ED163000	Seal			C	1
1	4	A0ED940700	Label Toner 2			D	1
1	5	A161N10K00	Indicating Wiring			D	1
1	6	A161160403	Cover			C	1
1	7	A00JH00D00	PWB Assembly LED1	Tray 1 empty indicator board (PEIB/1) Tray 2 empty indicator board (PEIB/2)		C	2
1	8	A161160300	Cover			C	1
1	9	4475260302	MAGNET CATCH			D	2
1	10	A161161301	Open/close Cover /Front			C	1
1	11	A161160205	Open/close Cover /Front			C	1
1	12	A61F940100	Label bizhub 364e		{364e}	C	1
1	12	A61G940100	Label bizhub 284e		{284e}	C	1
1	12	A61H940100	Label bizhub 224e		{224e}	C	1
1	13	A00J945500	Logo Mark			C	1
1	14	A161940400	Label			C	1
1	15	A5C1R71600	Cleaning Material			C	1
1	16	56AA40490	SHAFT STOPPER 4			C	1
1	17	A161165602	Support Shaft			C	1
1	18	A161160702	Cover /Left			C	1
1	19	A161160801	Cover /Left			C	1

1	20	A161164902	Cushion			C	1
1	21	A00J106202	Cleaning Pad			C	1
1	22	A61F130300	Seal			D	6
1	23	A61F130400	Seal			D	4
1	24	A0P0264800	Tape			D	4
1	25	A61D148200	Seal			D	1
1	26	A5C1132301	Shield Plate			C	1
1	27	A5C1160601	Cover			C	1
1	a	V116030804	Screw			V	
1	b	V149030803	screw			V	
1	c	V153030803	Screw			V	
1	d	V153031004	screw			V	
1	e	V116030803	Screw			V	

1.1.2 P2

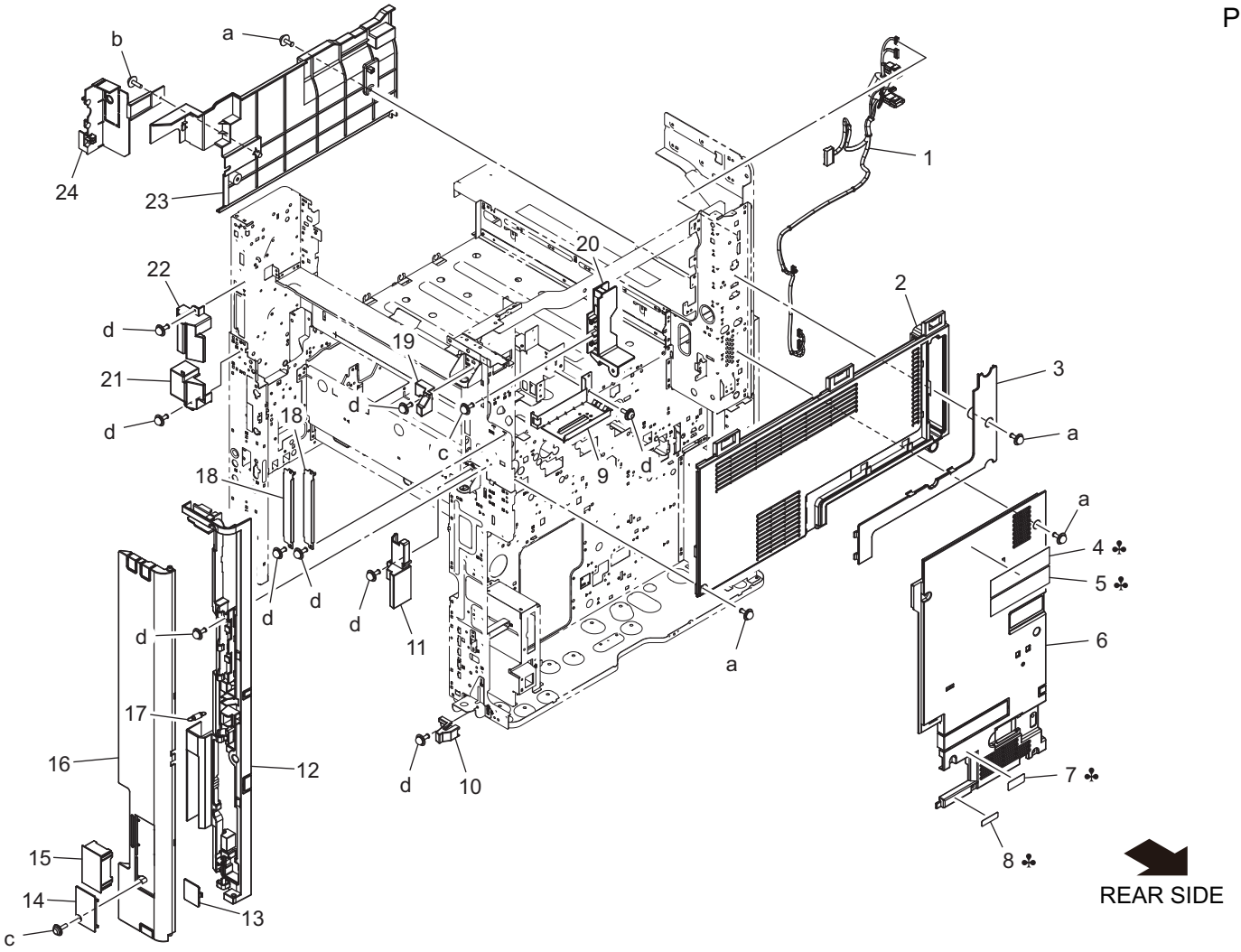

Page	Key	Parts No.	Description	Service Manual	Destinations	Class	Quantity
2	1	A5C1N10M00	FNS Relay harness			D	1
2	2	A161162102	Cover			C	1
2	3	A161163501	Cover			C	1
2	4	A2X0945700	Label		A,A1	C	1
2	5	A2X0945000	Label		C	C	1
2	6	A161166302	Cover			C	1
2	7	A02E149900	Label		A,A1	C	1
2	8	A00J945201	Label 220-240V 0.65A		C,D1,D3,E,F2,G1,I,K	C	1
2	9	A5C1133700	Ground Plate			D	1
2	10	A161164800	Regulating Part /Lower			D	1

2	11	A161164702	Regulating Part /Middle			D	1
2	12	A5C1161800	Cover			C	1
2	13	A161164401	Cover			C	1
2	14	A5C1166501	Cover			C	1
2	15	A161166400	Cover			C	1
2	16	A5C1160901	Cover			C	1
2	17	A161163900	Pulling Coil spring			C	1
2	18	A161139800	Cover			D	2
2	19	A161164600	Regulating Part /Upper			D	1
2	20	A5C1132001	Guide			D	1
2	21	A161161201	Cover			D	1
2	22	A161162900	Cover			D	1
2	23	A161162201	Cover			C	1
2	24	A161162801	Cover			C	1
2	a	V116030804	Screw			V	
2	b	V153030804	screw			V	
2	c	V153030803	Screw			V	
2	d	V116030803	Screw			V	

1.2 INNER COVER SECTION

1.2.1 P3

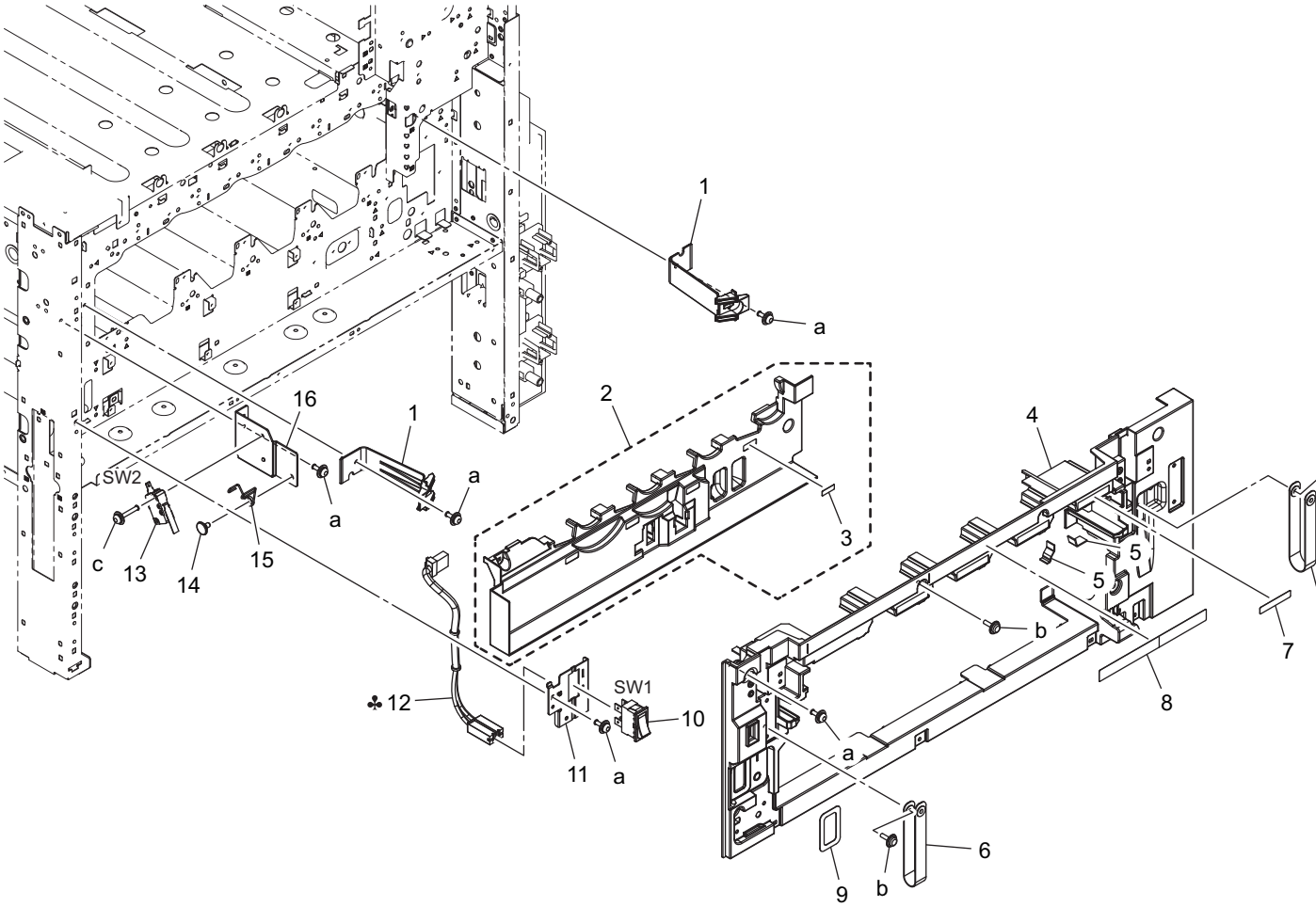

Page	Key	Parts No.	Description	Service Manual	Destinations	Class	Quantity
3	1	A161165700	Fixing Claw			D	2
3	2	A61FR71300	Cover /Front (2nd) Assy			C	1
3	3	A161943000	Label			C	1
3	4	A161165007	Cover /Front			C	1

3	5	A161165300	Protection Part			C	2
3	6	A0ED162401	Band			D	2
3	7	A161942500	Label DR/K			D	1
3	8	A61F942600	Label			D	1
3	9	A161942000	Label			D	1
3	10	4038M60000	SEESAW-SWITCH	Main power switch (SW1)		C	1
3	11	A161135100	Mounting Plate			D	1
3	12	A161N12A00	AC Wiring /A		A,A1	D	1
3	12	A61FN12A00	AC Wiring /A		B,C,D1,D3,E,F2,G1,G2,I,K	D	1
3	13	9J06M60100	MICRO SWITCH	Front door switch (SW2)		C	1
3	14	4038228702	SHOULDER SCREW			C	1
3	15	A161151300	Torsion Coil spring			D	1
3	16	A161151100	Mounting Plate			D	1
3	a	V116030803	Screw			V	
3	b	V153030803	Screw			V	
3	c	V116031603	Screw			V	

1.3 OPERATION PANEL SECTION

1.3.1 P4

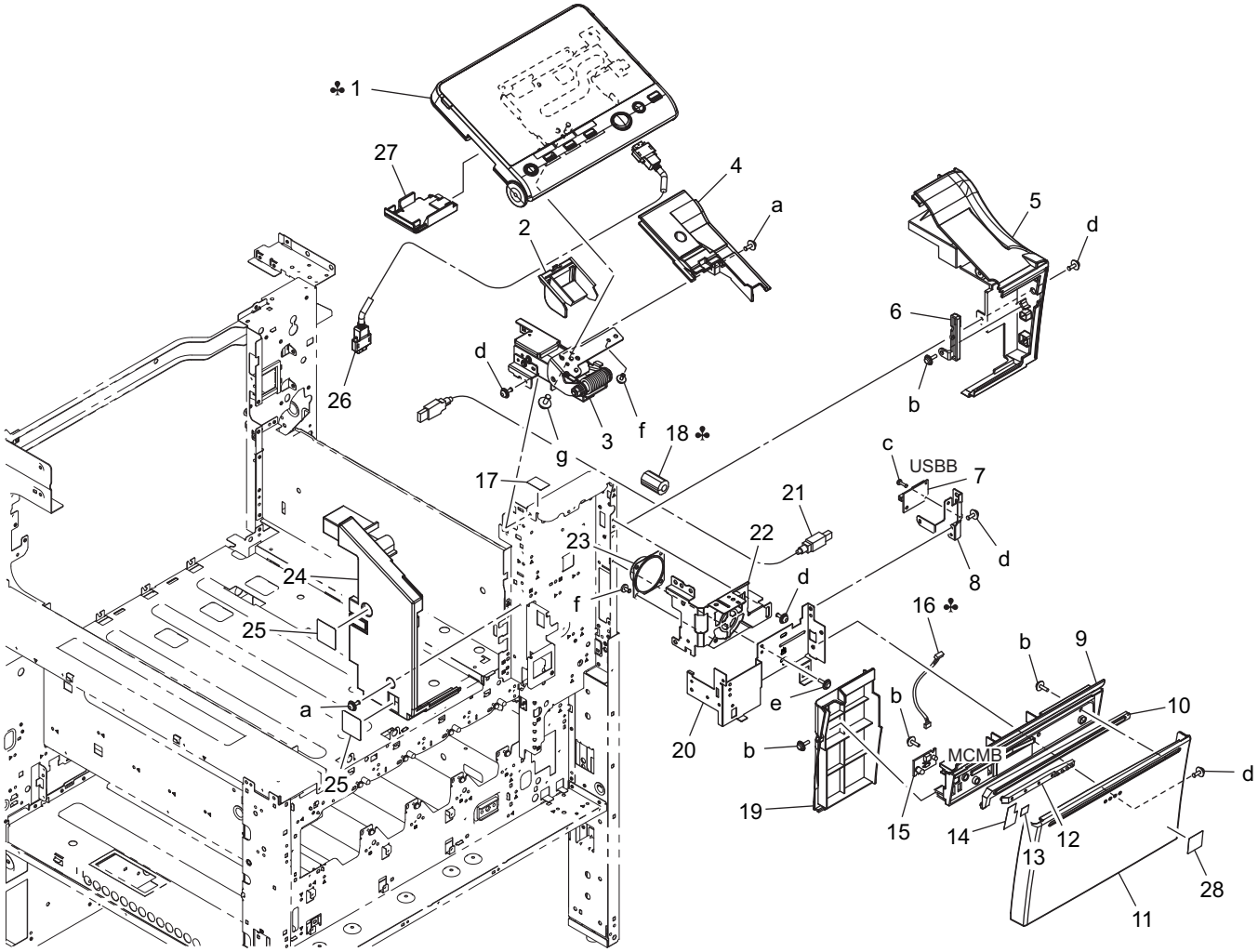

Page	Key	Parts No.	Description	Service Manual	Destinations	Class	Quantity
4	1	A61FM70003	Panel assembly	Control panel unit	A,A1	I	1
4	1	A61FM70103	Panel assembly	Control panel unit	B,D1,D3,E,F2,G1,G2,I,K	I	1
4	1	A61FM70203	Panel assembly	Control panel unit	C	I	1
4	2	A161190900	Cover			C	1
4	3	A5C1R70911	Mounting Plate Assy			C	1
4	4	A161162604	Cover			C	1

4	5	A161161503	Cover			C	1
4	6	A161164000	Cover			D	1
4	7	A0P0H02500	PWB assembly(PWB-UCN ASSY)	USB board (USBB)		D	1
4	8	A161138002	Mounting Plate			D	1
4	9	A5C1167800	Light blocking Cover			D	1
4	10	A161167000	Lens			D	1
4	11	A161161702	Cover			C	1
4	12	A161167100	Lens			D	1
4	13	A161167400	Light blocking Sheet /2			D	1
4	14	A161167300	Light blocking Sheet /1			D	1
4	15	A161H00U01	PWB Assembly(PWB-LED ASSY)			C	1
4	16	A5C1N10B00	Indicating Wiring/3		A,A1,B,G2	D	1
4	16	A5C1N10D00	Indicating Wiring/4		C,D1,D3,E,F2,G1,I,K	D	1
4	17	A5C1122600	Spacer			D	1
4	18	A5C1M92000	Ferrite core		C,D1,D3,E,F2,G1,I,K	D	1
4	19	A161161900	Cover			D	1
4	20	A161164104	Mounting Plate			D	1
4	21	A0P0N15300	Cable			C	1
4	22	A5C1137303	Mounting Plate			D	1
4	23	A0P0M73100	Speaker			D	1
4	24	A161161401	Cover			C	1
4	25	A161162400	Seal			C	2
4	26	A5C1N15601	Interface Cable			D	1
4	27	A55V161201	Cover			C	1
4	28	A011946200	Label Emperon			D	1
4	a	V116030804	Screw			V	
4	b	V153030803	Screw			V	
4	c	V111020603	screw			V	
4	d	V116030803	Screw			V	
4	e	V137030803	screw			V	
4	f	V126030603	screw			V	
4	g	V125041003	Screw			V	

1.4 IR COVER SECTION

1.4.1 P5

P

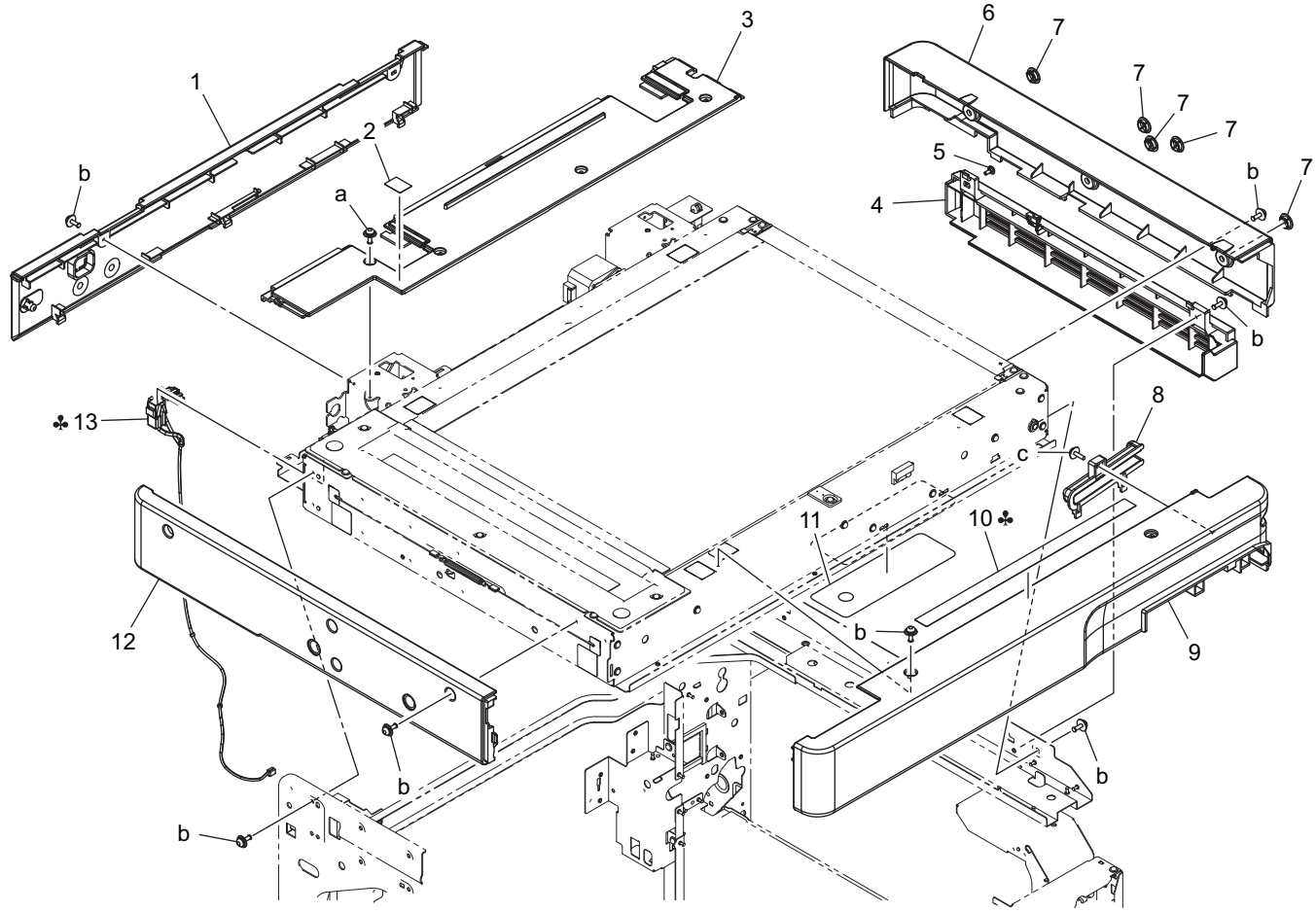

Page	Key	Parts No.	Description	Service Manual	Destinations	Class	Quantity
5	1	A161170203	Read Cover /Rear			C	1
5	2	A161940602	Label			D	1
5	3	A161170701	Read Cover			C	1
5	4	A161170602	Read Cover			C	1
5	5	A00J169300	Shoulder screw			C	1
5	6	A161170400	Read Cover /Right			C	1
5	7	A02E167700	Cover			C	5
5	8	A161170800	Holder			D	1
5	9	A161170100	Read Cover /Front			C	1
5	10	A121944700	Label Prohibit		B,G2	C	1
5	10	A3EW944600	Label		A,A1	C	1
5	11	A161282100	Ground Sheet			D	1
5	12	A161170300	Read Cover /Left			C	1
5	13	A161N11C01	Scanner Relay harness / 100V		A,A1	D	1
5	a	V116030804	Screw			V	
5	b	V116030803	Screw			V	
5	c	V153030803	Screw			V	

1.5 SCANNER SECTION

1.5.1 P6

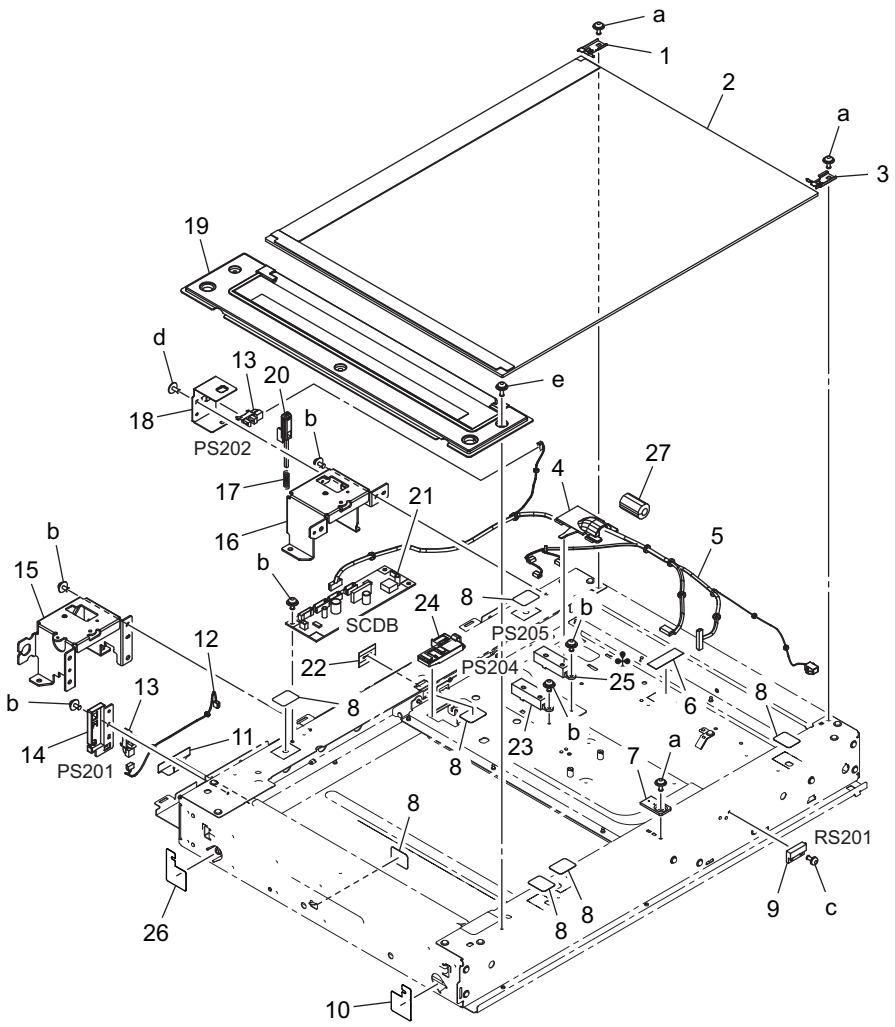

Page	Key	Parts No.	Description	Service Manual	Destinations	Class	Quantity
6	1	A161268300	Holding Plate			D	1
6	2	A161R72200	Original Glass Assy			C	1
6	3	A161268200	Holding Plate			D	1
6	4	A161281600	Guide			D	1
6	5	A161N14100	Scanner Wiring /1			D	1
6	6	4036307501	TAPE			D	1
6	7	A00J265300	Regulating Plate			C	1
6	8	4581162501	SEAL			C	7
6	9	A1UDM50200	Lead Switch	Original cover sensor (RS201)		C	1
6	10	A5C1263300	Seal			C	1
6	11	A161263000	Seal			D	1
6	12	A161N14201	Scanner Wiring /2			D	1
6	13	A108M50100	Photo interrupter	Scanner home sensor (PS201) Angle sensor (PS202)		B	2
6	14	A161262200	Cover			D	1
6	15	A161261902	Frame			D	1
6	16	A161262002	Frame			D	1
6	17	A161280300	Compressing Coil spring			C	1
6	18	A161280112	Mounting Plate			D	1
6	19	A161R72300	Slit Glass Assy			C	1
6	20	A161280211	Lever			D	1
6	21	A5C1H01A11	PWB Assembly(PWB-ID)	Scanner drive board (SCDB)		I	1
6	22	A161281300	Seal			D	1

6	23	A161M50A00	APS Photo reflector	Original size sensor/1 (PS204)		C	1
6	24	A161281100	Guide			D	1
6	25	A161M50A00	APS Photo reflector	Original size sensor/2 (PS205)	D1,D3,E,F2,G1,I,K	C	1
6	26	A5C1263400	Seal			C	1
6	27	A61FM90200	Ferrite core			D	1
6	a	V121030604	Screw			V	
6	b	V116030603	Screw			V	
6	c	V115030603	Screw			V	
6	d	V137030603	screw			V	
6	e	V116030804	Screw			V	

1.5.2 P7

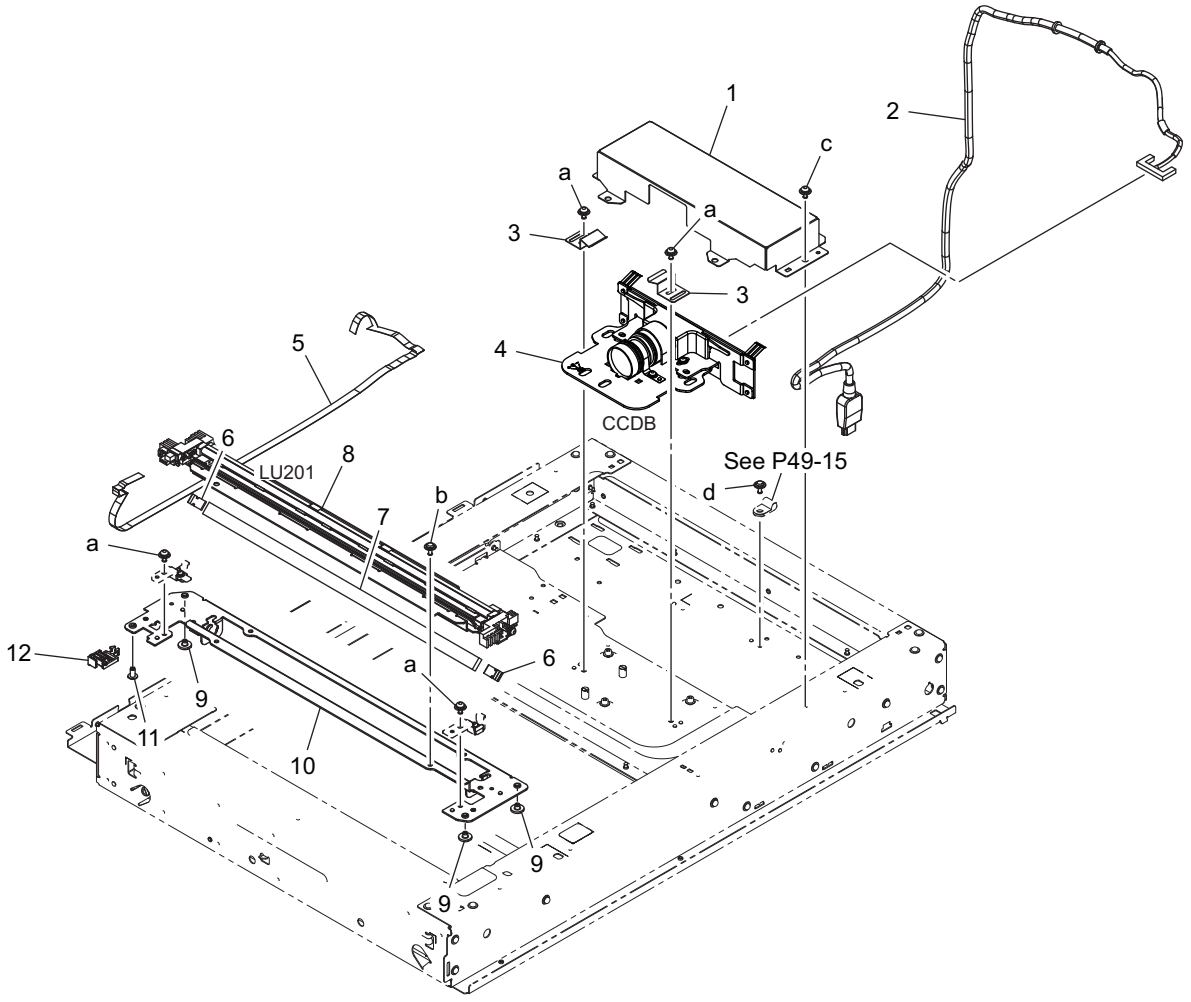

Page	Key	Parts No.	Description	Service Manual	Destinations	Class	Quantity
7	1	A161278600	Cover			D	1
7	2	A5C1N14400	CCD Cable			D	1
7	3	A161278900	Plate spring			D	2
7	4	A61FR72100	CCD Lens Assy	CCD board (CCDB)		I	1
7	5	A161N14000	Scanner Wiring /4			D	1
7	6	A0ED271300	Plate spring			D	2
7	7	A0ED271200	Mirror			D	1
7	8	A61FM31100	Lamp	LED exposure unit (LU201)		C	1
7	9	A161271000	Bushing			D	3
7	10	A161270102	Frame			D	1
7	11	A161271100	Bushing			D	1
7	12	A161270600	Guide			D	1
7	a	V116030603	Screw			V	

7	b	V137030603	screw			V	
7	c	V127030516	screw			V	
7	d	V137030804	screw			V	

1.5.3 P8

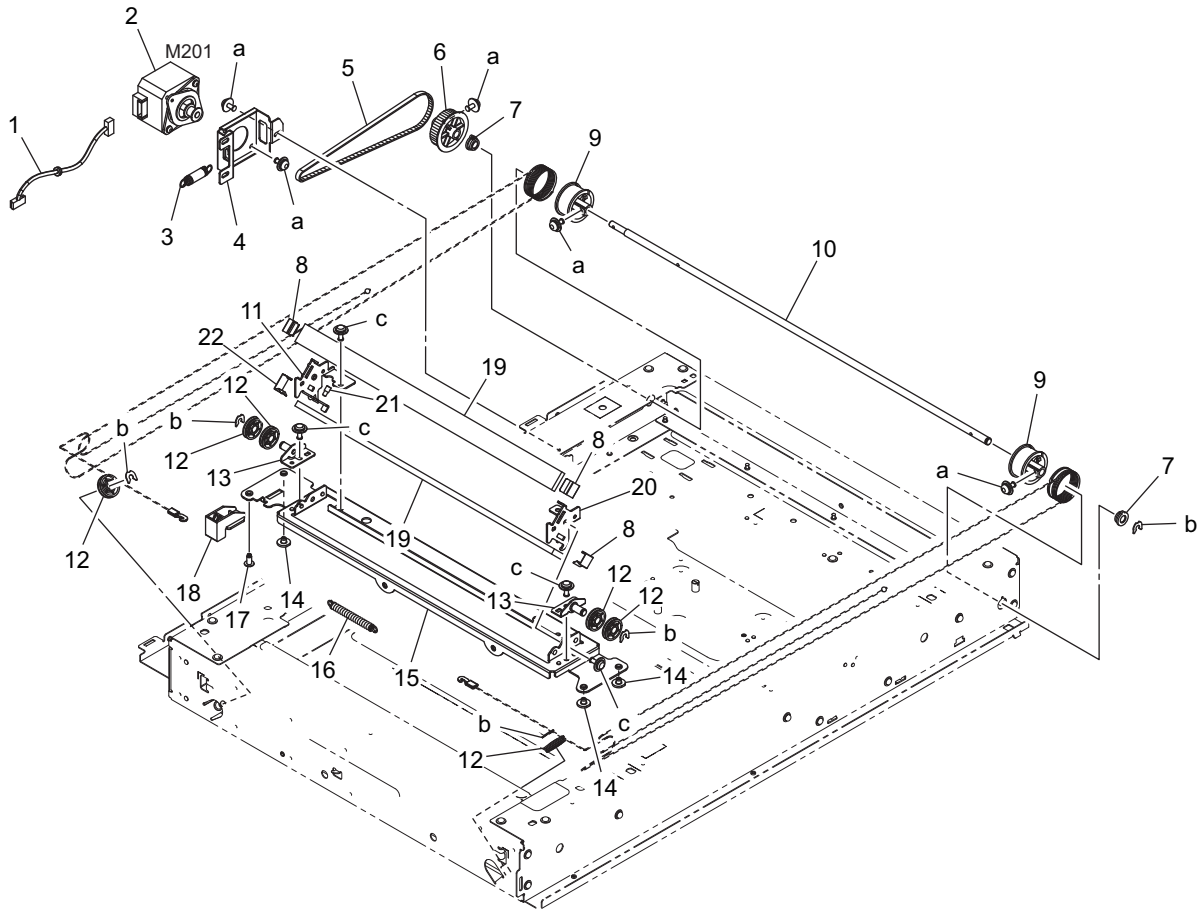

Page	Key	Parts No.	Description	Service Manual	Destinations	Class	Quantity
8	1	A5C1N14300	Scanner Wiring			D	1
8	2	A5C1M10A00	Stepping motor	Scanner motor (M201)		C	1
8	3	A161275700	Pulling Spring			D	1
8	4	A161276000	Mounting Plate			D	1
8	5	A161275600	Timing belt 335L			D	1
8	6	A161275500	Pulley 103T			D	1
8	7	A161276500	Bearing			D	2
8	8	A0ED274400	Plate spring			D	3
8	9	A161275300	Pulley			D	2
8	10	A161275400	Shaft			D	1
8	11	A161273701	Mounting Plate			D	1
8	12	A0ED273600	Pulley			C	6
8	13	A161273401	Mounting Plate			D	2
8	14	A161271000	Bushing			D	3
8	15	A161273100	Frame			D	1
8	16	A0ED276301	Pulling Spring			D	1
8	17	A161271100	Bushing			D	1
8	18	A161273500	Guide Part			D	1
8	19	A0ED274300	Mirror			D	2
8	20	A161273800	Mounting Plate			D	1

8	21	A161274600	Adjusting Screw			C	1
8	22	A161274500	Plate spring /1			D	1
8	a	V116030603	Screw			V	
8	b	V218040086	E ring			V	
8	c	V137030603	screw			V	

1.6 PH UNIT

1.6.1 P9

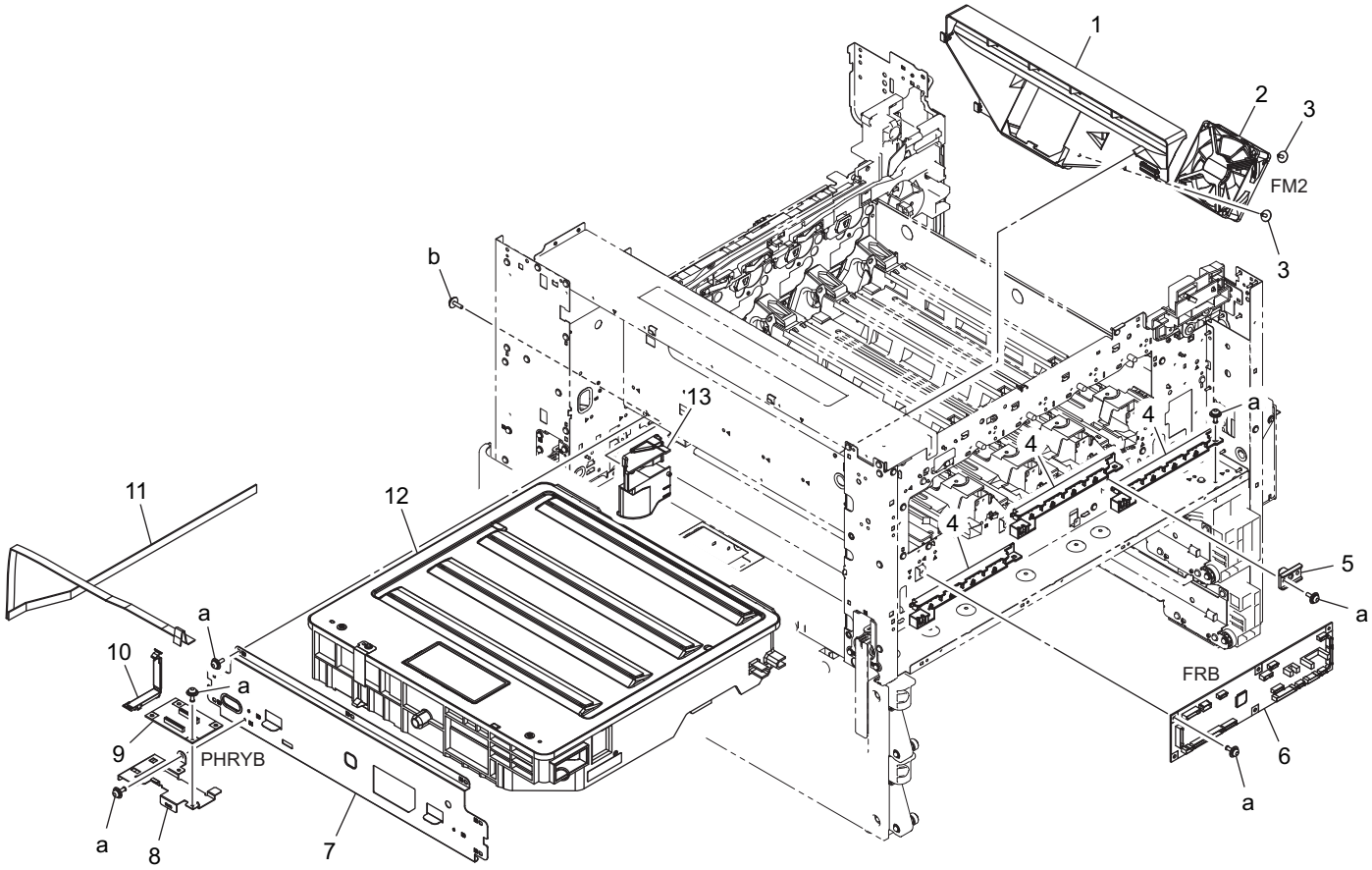

Page	Key	Parts No.	Description	Service Manual	Destinations	Class	Quantity
9	1	A61F140200	Duct			D	1
9	2	4139M10000	FAN MOTOR			B	1
9	3	4163529301	SCREW			C	2
9	4	A5C1135300	Guide			D	3
9	5	A161105400	Positioning Plate			D	1
9	6	A61FH00500	PWB Assembly(PWB-FR)	Front side board (FRB)		I	1
9	7	A161101802	Mounting Plate			D	1
9	8	A161130301	Mounting Plate			D	1
9	9	A61FH00800	PWM Assembly (PWB-VD2)	PH relay board (PHRYB)		C	1
9	10	A161137802	Holder			D	1
9	11	A61FN11900	Flatcable			C	1
9	12	A61FR70300	Print Head Assy	PH unit		I	1
9	13	A161147401	Duct			D	1
9	a	V116030803	Screw			V	
9	b	V153030803	Screw			V	

1.7 TONER SUPPLY SECTION

1.7.1 P10

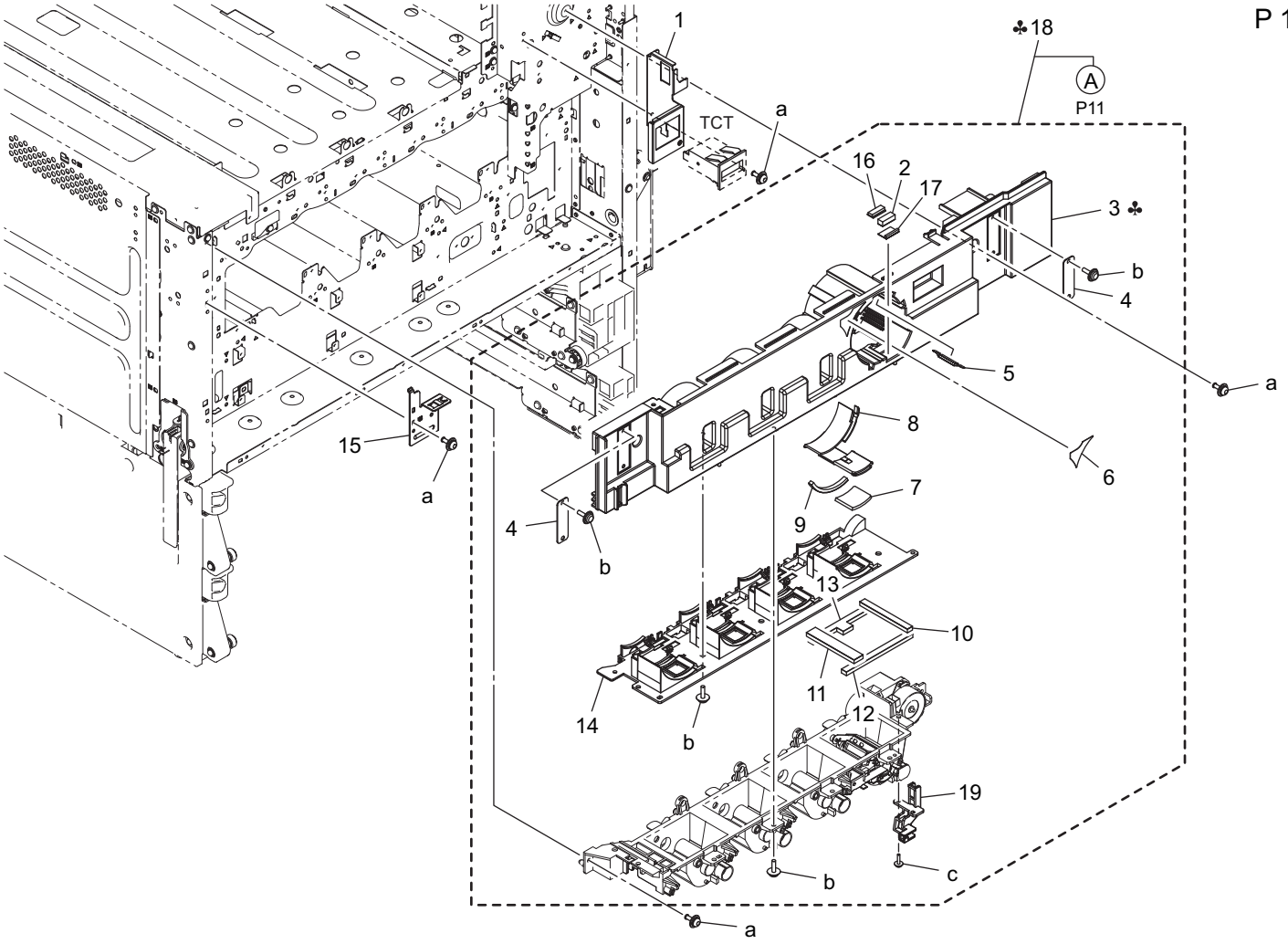

Page	Key	Parts No.	Description	Service Manual	Destinations	Class	Quantity
10	1	A5C1120700	Reinforce Plate			D	1
10	2	A161403701	Seal			D	1
10	3	A61F402001	Cover		A,A1	D	1
10	3	A61F405102	Cover		B,G2	D	1
10	3	A61F405202	Cover		C	D	1
10	3	A61F405300	Cover		D1,D3,E,F2,G1,I,K	D	1
10	4	4038101401	SUCTION PLATE			D	2
10	5	A161403901	Spacer			D	1
10	6	A0ED940600	Label Toner 1			D	1
10	7	A161402502	Seal			D	1
10	8	A161402402	Shutter			D	1
10	9	A161403800	Seal			D	1
10	10	A161403500	Seal			D	1
10	11	A161403600	Seal			D	1
10	12	A61F403300	Seal			D	1
10	13	A61F403400	Seal			D	1
10	14	A161402114	Cover			D	1
10	15	A161135502	Mounting Plate			D	1
10	16	A161404001	Seal /1			D	1
10	17	A161404100	Seal /2			D	1
10	18	A61FR70400	Sub Hopper Assy		A,A1	I	1
10	18	A61FR70500	Sub Hopper Assy		B,G2	I	1
10	18	A61FR70600	Sub Hopper Assy		C	I	1

10	18	A61FR72000	Sub Hopper Assy		D1,D3,E,F2,G1,I,K	I	1
10	19	A61F400000	Holder			D	1
10	a	V116030803	Screw			V	
10	b	V153030803	Screw			V	
10	c	V153031004	screw			V	

1.7.2 P11

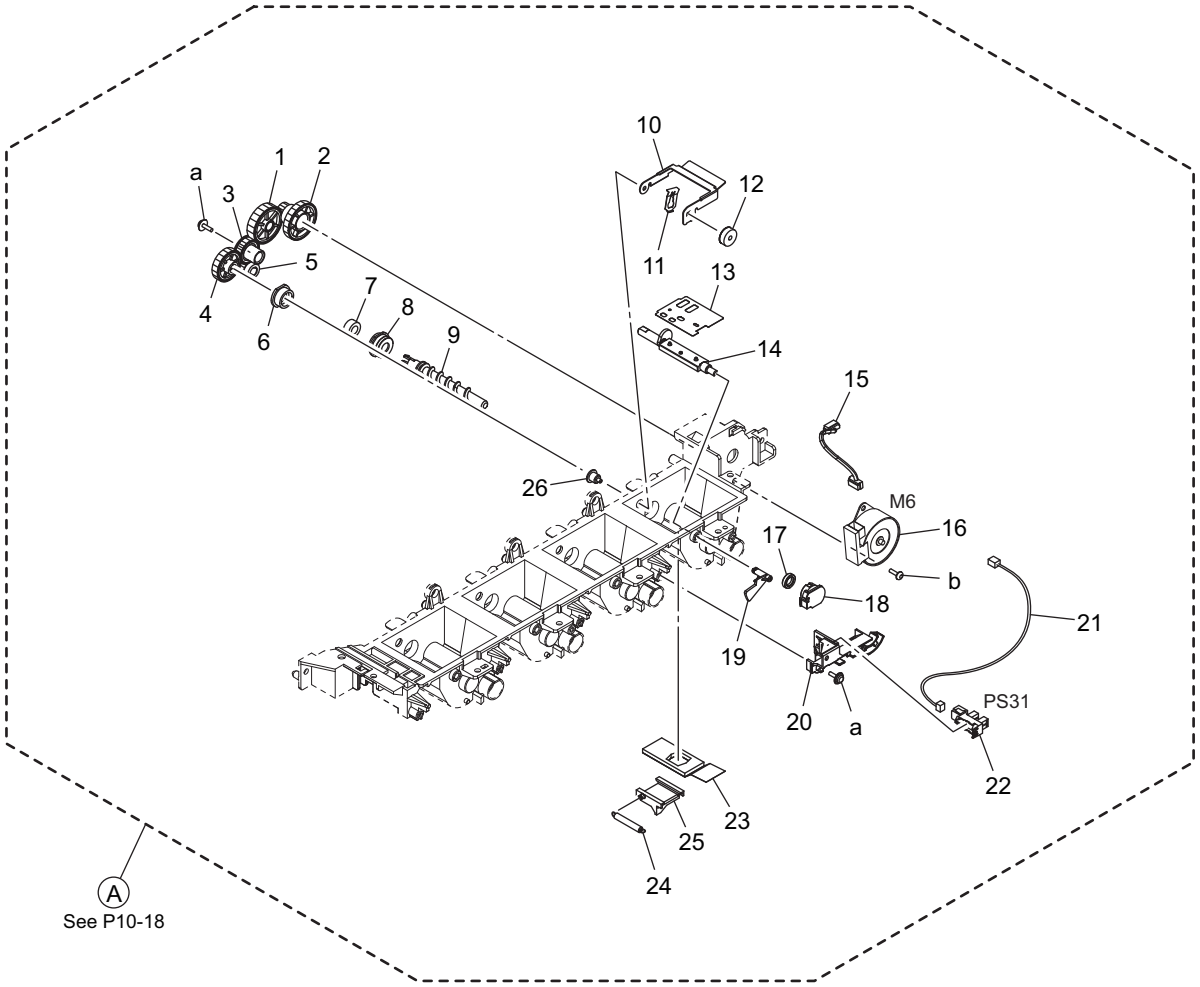

Page	Key	Parts No.	Description	Service Manual	Destinations	Class	Quantity
11	1	A161401400	Gear 43T			C	1
11	2	A161401300	Gear 17/65T			C	1
11	3	A161401200	Gear 28T			C	1
11	4	A161401100	Gear 36T			C	1
11	5	A161401000	Gear 18T			C	1
11	6	4163510201	BUSHING			C	1
11	7	4576536301	SEAL			D	1
11	8	A161403100	Holder			C	1
11	9	A161400100	Screw			C	1
11	10	A161400401	Detecting Plate			D	1
11	11	A161404200	Fixing Plate			D	1
11	12	A161400601	Detecting Seal			D	1
11	13	A161400300	Agitating Part			D	1
11	14	A161400200	Agitating Shaft			D	1
11	15	A161N12801	Toner Drive harness /K			D	1
11	16	A5C1M10400	Stepping motor			C	1
11	17	4333501201	SEAL			D	1
11	18	A161403000	Bushing			D	1

11	19	A161404300	Detecting Actuator			D	1
11	20	A161400701	Mounting Plate			D	1
11	21	A61FN10F00	Toner Detection harness			D	1
11	22	A108M50100	Photo interrupter	Toner empty sensor/K (PS31)		B	1
11	23	A161403200	Seal			D	1
11	24	4036534801	TENSION SPRING			C	1
11	25	A0ED401000	Shutter			D	1
11	26	A161400800	Pin			D	1
11	a	V153030803	Screw			V	
11	b	V145030803	screw			V	

1.8 WASTE TONER BOX SECTION

1.8.1 P12

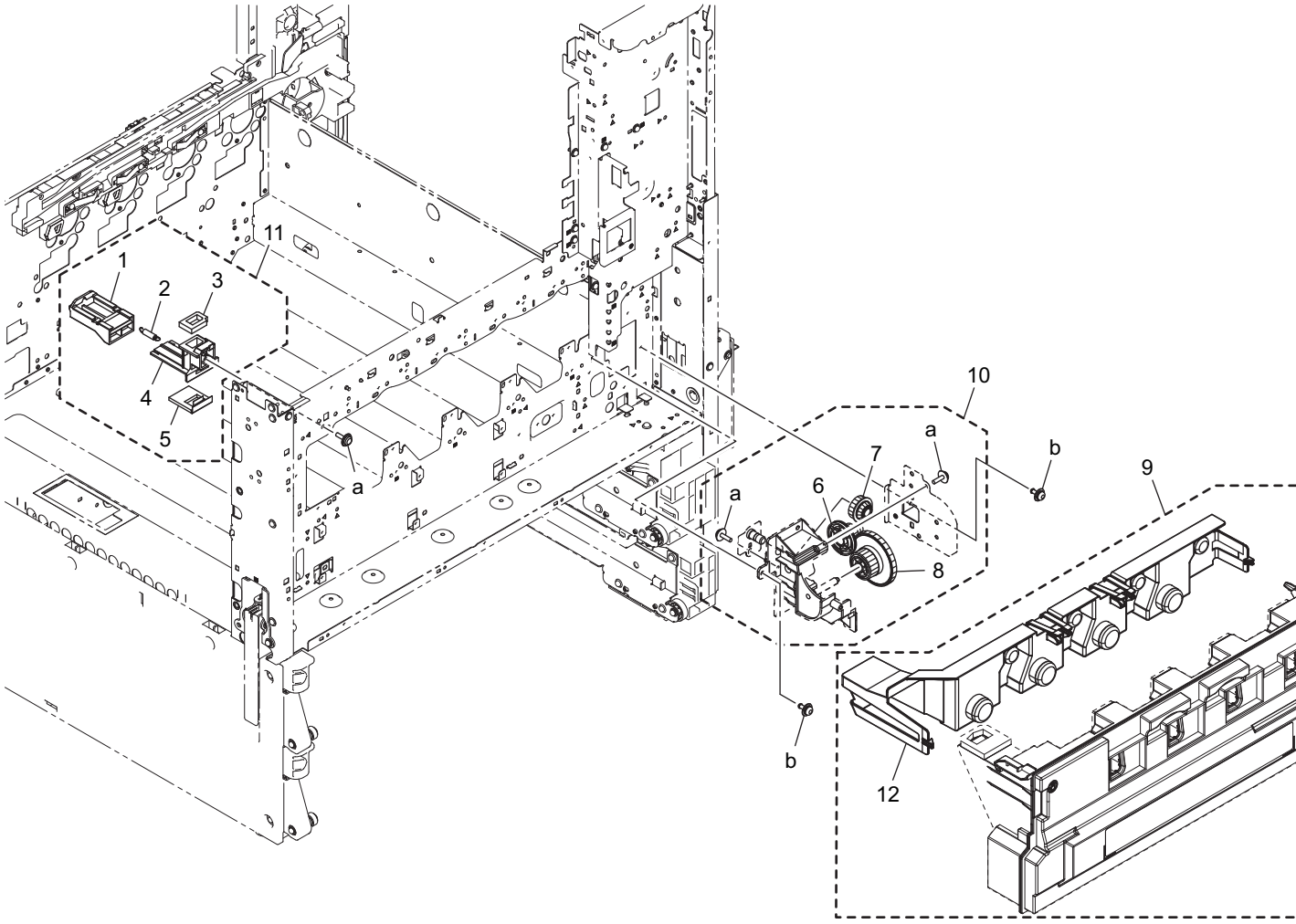

Page	Key	Parts No.	Description	Service Manual	Destinations	Class	Quantity
12	1	A0ED363100	Shutter			D	1
12	2	A0ED363200	Pulling Coil spring			D	1
12	3	A0ED363400	Seal			D	1
12	4	A0ED363000	Pipe			D	1
12	5	A0ED363301	Seal			D	1
12	6	A161245100	Gear 16/40T			D	1
12	7	A0ED245000	Gear 20/20T			D	1
12	8	A161245400	Gear 16/51T			D	1
12	9	A4NNWY1	WASTE TONER BOX			A	1
12	10	A161F21002	Waste Toner Driva			C	1
12	11	A0EDF36001	Waste Toner Pipe			C	1
12	12	A161362000	Cover			C	1

12	a	V153030803	Screw			V	
12	b	V125030818	Screw			V	

1.9 ERASE LAMP SECTION

1.9.1 P13

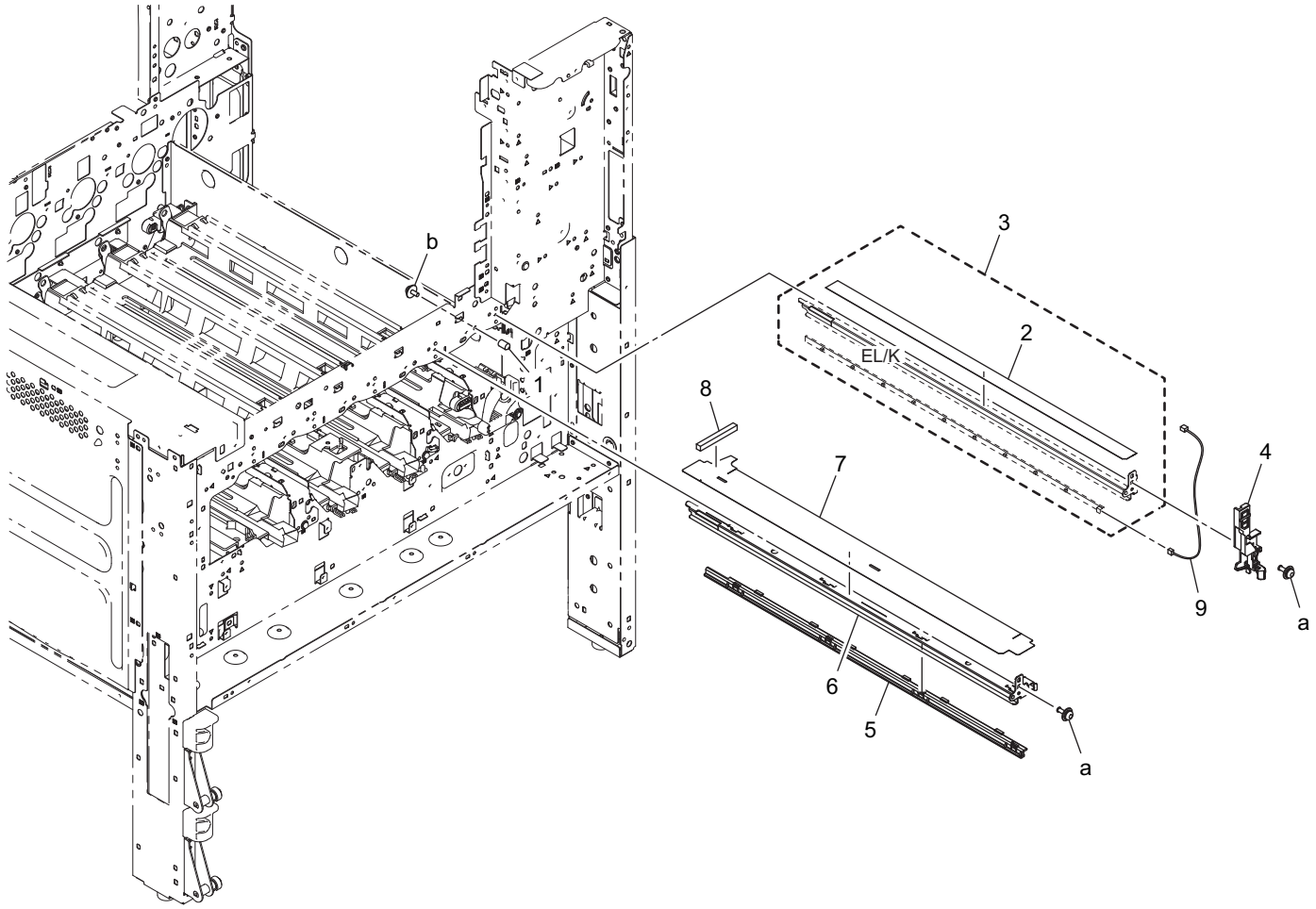

Page	Key	Parts No.	Description	Service Manual	Destinations	Class	Quantity
13	1	A0ED103100	Pin			D	1
13	2	A161107400	Light blocking Part	Erase LED/K (EL/K)		C	1
13	3	A161R70011	Eraser (Black) Assy			C	1
13	4	A61F130001	Holder			D	1
13	5	A0ED105400	Rail			D	1
13	6	A161105600	Rail			D	1
13	7	A5C1105500	Light blocking Part			D	1
13	8	A161107100	Seal			D	1
13	9	A61FN11V00	Neutralizing Wiring			D	1
13	a	V116030803	Screw			V	
13	b	V116030603	Screw			V	

1.10 DV LOCK LEVER SECTION

1.10.1 P14

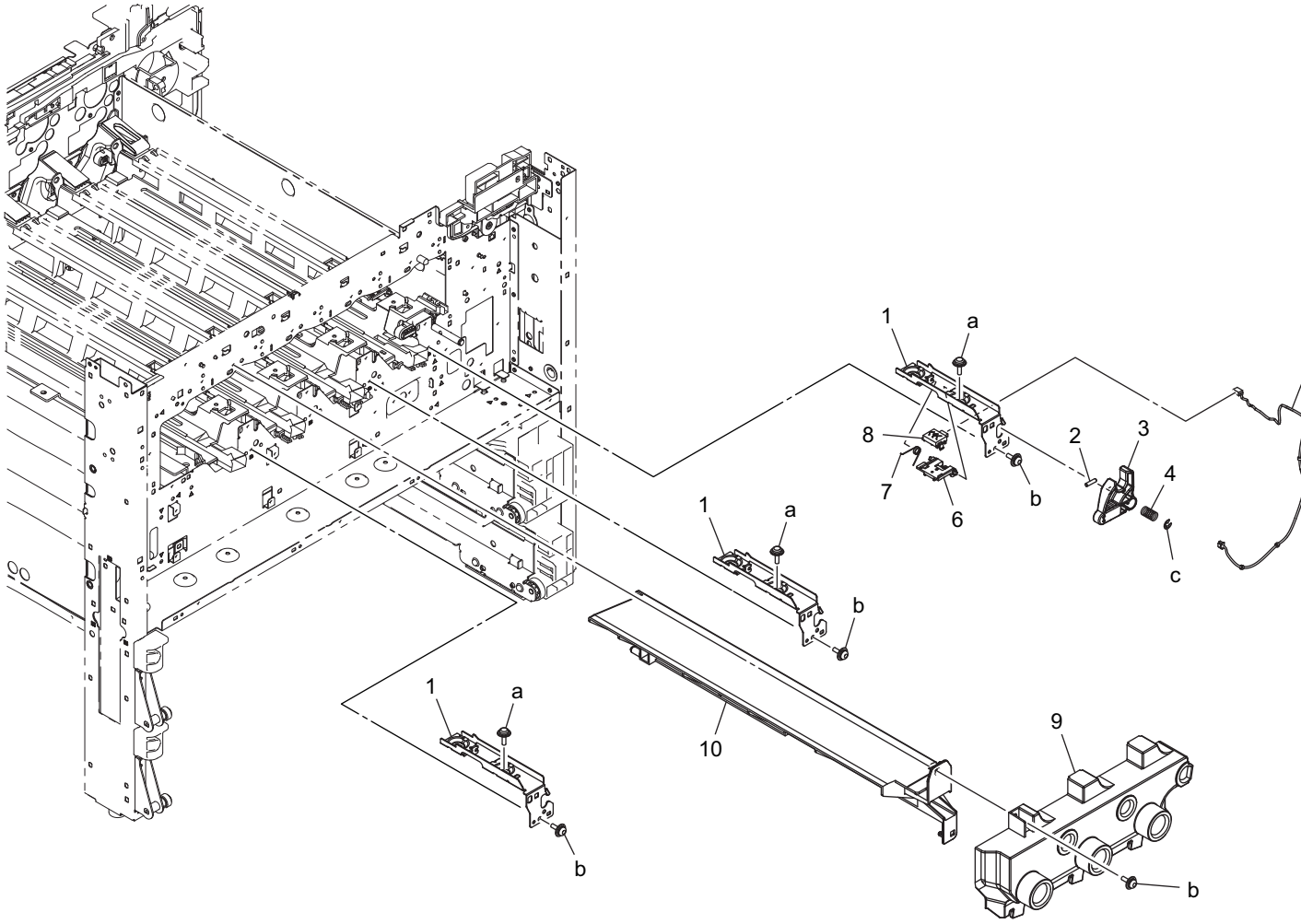

Page	Key	Parts No.	Description	Service Manual	Destinations	Class	Quantity
14	1	A5C1115200	Reinforce Plate			D	3
14	2	56AA17471	PIN B 3X12			C	1
14	3	A161116202	Release Lever			D	1
14	4	A161119500	Compressing Coil spring			D	1
14	5	A61FN10Y00	Photoconductor Wiring			D	1
14	6	A0ED104801	Holder			C	1
14	7	A0ED105700	Torsion Coil spring			D	1
14	8	A0EDM60001	Relay Connector			D	1
14	9	A61F168200	Cover /Inside			D	1
14	10	A61F141100	Cover			D	1
14	a	V153030803	Screw			V	
14	b	V116030803	Screw			V	
14	c	V217040001	E Ring			V	

1.11 TRANSFER UNIT

1.11.1 P15

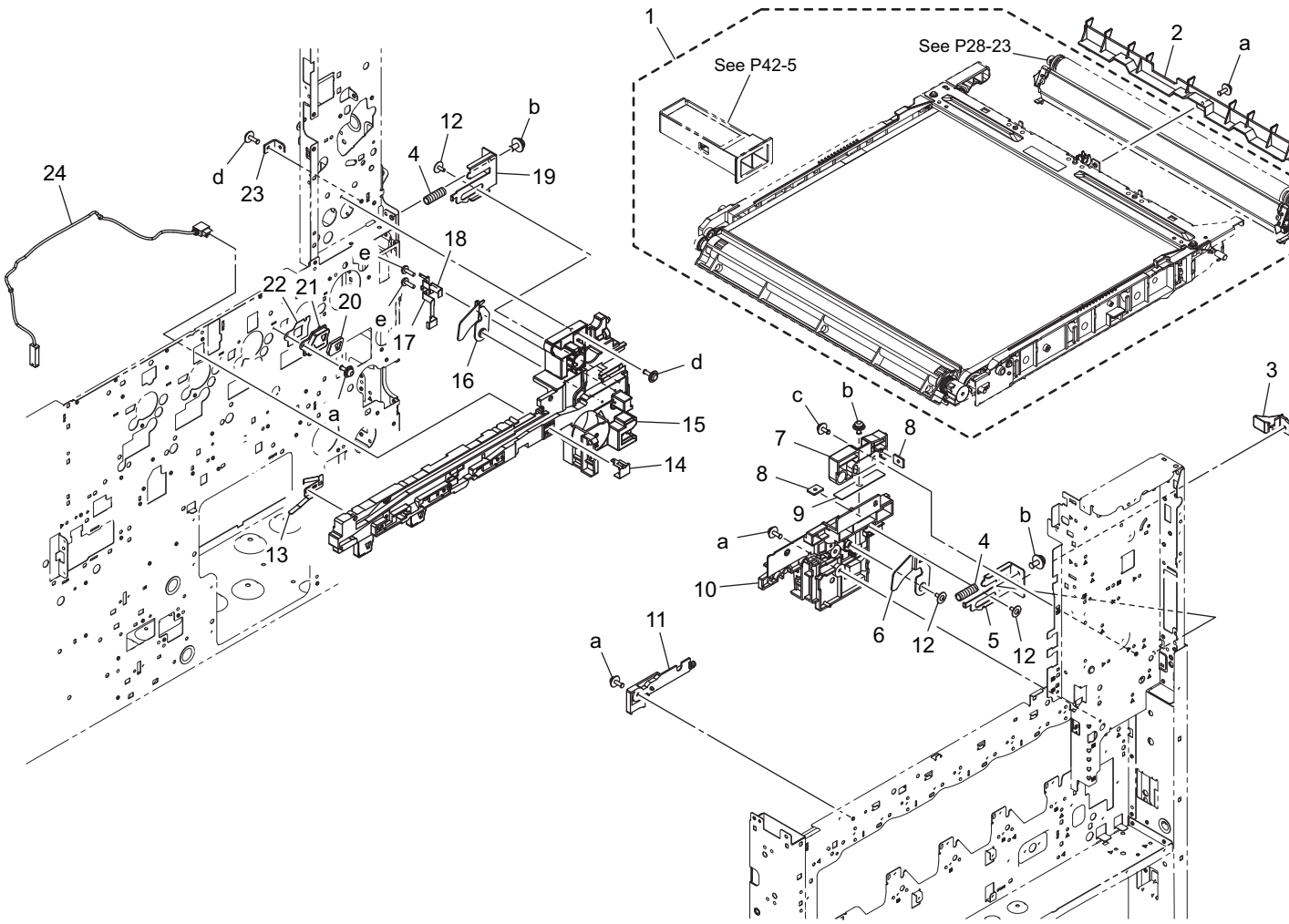

Page	Key	Parts No.	Description	Service Manual	Destinations	Class	Quantity
15	1	A61DR70000	Intermediate Image Transfer Kit			A	1
15	2	A161508400	Guide			C	1
15	3	A161110601	Lock Part			D	1
15	4	A0ED111000	Compressing Coil spring			D	2
15	5	A161112500	Lever /Front			D	1
15	6	A5C1112800	Arm /Front			D	1
15	7	A161110400	Fusing Rail /Front			D	1
15	8	A161112200	Mounting Plate			D	2
15	9	A161112600	Adjusting Plate			D	1
15	10	A161110201	Rail			D	1
15	11	A161110300	Rail			D	1
15	12	4163529301	SCREW			C	3
15	13	A0ED112000	Contact			D	1
15	14	A0ED111400	Contact /K			D	1
15	15	A161110102	Rail			D	1
15	16	A5C1112900	Arm /Rear			D	1
15	17	A161112300	Contact			D	1
15	18	A161112400	Contact			D	1
15	19	A161112100	Lever /Rear			D	1
15	20	A161144801	Seal			C	1
15	21	A161141700	Duct			D	1
15	22	A161146200	Seal			D	1

15	23	A161112700	Mounting Plate			D	1
15	24	A61FN11200	Transfer Wiring			D	1
15	a	V116030803	Screw			V	
15	b	V116040803	Screw			V	
15	c	V125030818	Screw			V	
15	d	V137030803	screw			V	
15	e	V145030803	screw			V	

1.12 PAPER FEED SECTION

1.12.1 P16

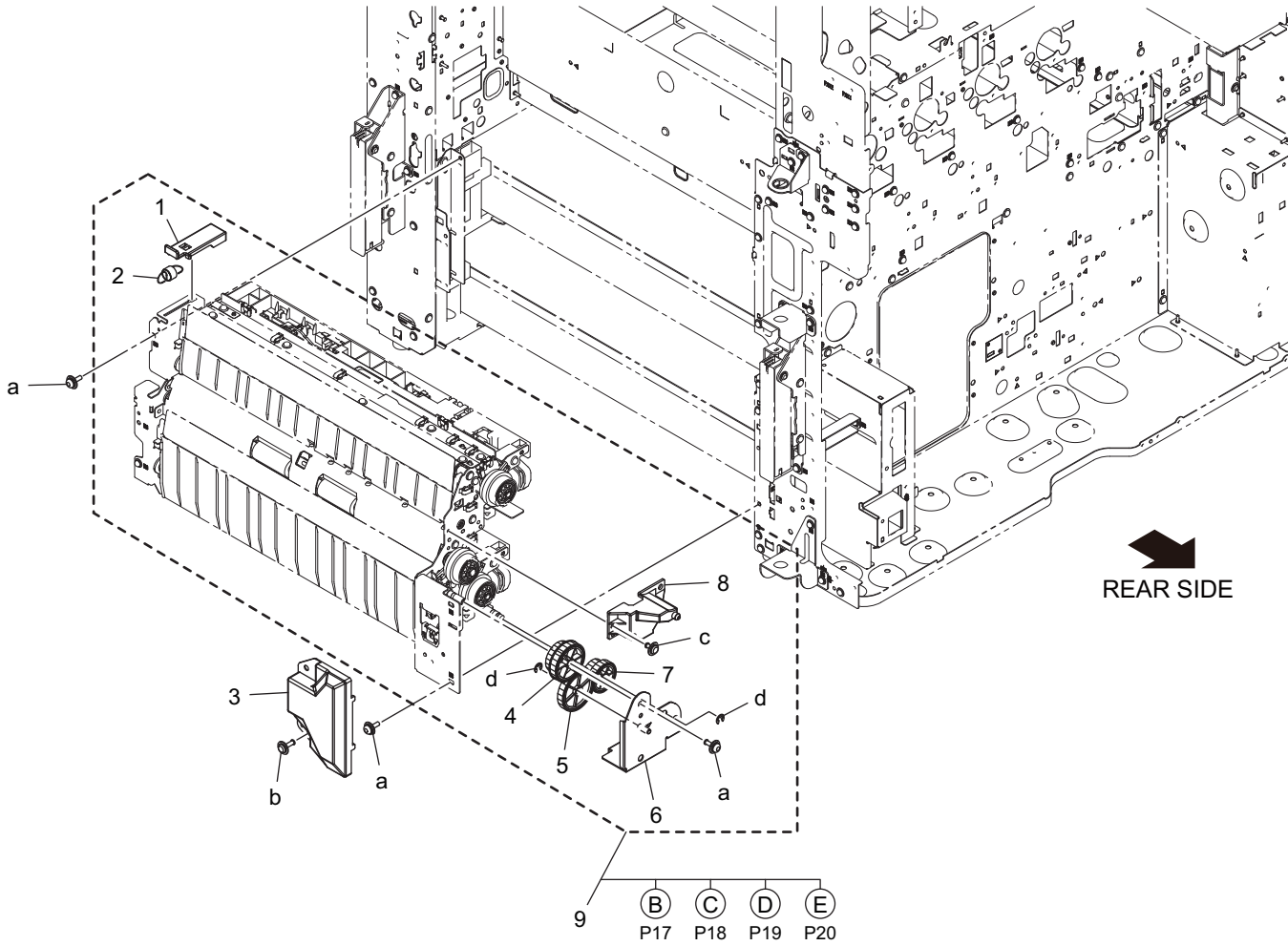

Page	Key	Parts No.	Description	Service Manual	Destinations	Class	Quantity
16	1	A161561100	Holder			D	1
16	2	A161561200	Pulling Coil spring			D	1
16	3	A161579011	Cover			D	1
16	4	A161576300	Gear 27/33T			C	1
16	5	A161576200	Gear 36T			C	1
16	6	A161F56101	Caulking(Hold Plate Drive)			D	1
16	7	A161576100	Gear 21/26T			C	1
16	8	A161565102	Mounting Plate			D	1
16	9	A5C1R70700	Paper Feed Assy			S	1
16	a	V116030803	Screw			V	
16	b	V137030803	screw			V	
16	c	V144030603	Screw			V	
16	d	V217040001	E Ring			V	

1.13 1ST PAPER FEED SECTION

1.13.1 P17

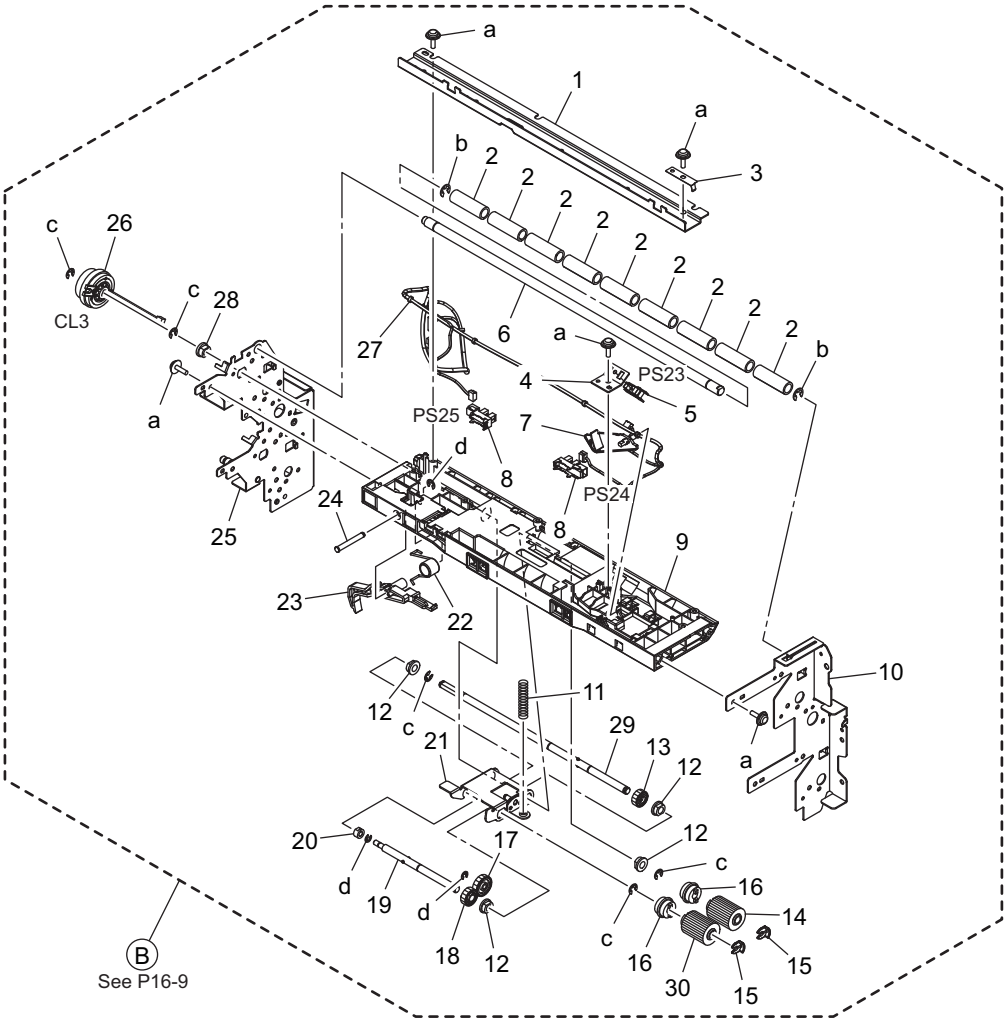

Page	Key	Parts No.	Description	Service Manual	Destinations	Class	Quantity
17	1	A161566000	Reinforce Plate			D	1
17	2	4034352501	ROLLER			C	9
17	3	A161560600	Ground Plate			D	1
17	4	A161560900	Mounting Plate			D	1
17	5	A0EDM50100	Photoreflector	Tray 1 paper feed sensor (PS23)		I	1
17	6	A5C1565500	Shaft			D	1
17	7	A161561600	Actuator			C	1
17	8	A108M50100	Photointerrupter	Tray 1 paper empty sensor (PS24) Tray 1 upper limit sensor (PS25)		B	2
17	9	A161565300	Paper feed Frame			D	1
17	10	A161560101	Frame /Front			D	1
17	11	A161562800	Compressing Coil spring			C	1
17	12	4131300301	BUSHING			C	4
17	13	A161562400	Gear 26T			C	1
17	14	A00J563600	Roller			A	1
17	15	56AA40490	SHAFT STOPPER 4			C	2
17	16	A02E561100	Clutch			C	2
17	17	A161562300	Gear 34T			C	1
17	18	A161562600	Gear 28T			C	1
17	19	A161562000	Shaft			D	1
17	20	A161562500	Bushing			C	1
17	21	A161562101	Holder			D	1
17	22	A161567400	Torsion Spring			C	1

17	23	A161567300	Lever			C	1
17	24	A02E560800	Shaft			D	1
17	25	A161F56014	Caulking(Frame)			D	1
17	26	A02EM20200	Clutch	Tray 1 paper feed clutch (CL3)		B	1
17	27	A161N10P01	Paperfeed Wiring /1			D	1
17	28	A00J663200	Bushing			C	1
17	29	A161560500	Shaft			D	1
17	30	A5C1562200	Roller			A	1
17	a	V153030803	Screw			V	
17	b	V217050001	E ring			V	
17	c	V217040001	E Ring			V	
17	d	V217030001	E Ring			V	

1.13.2 P18

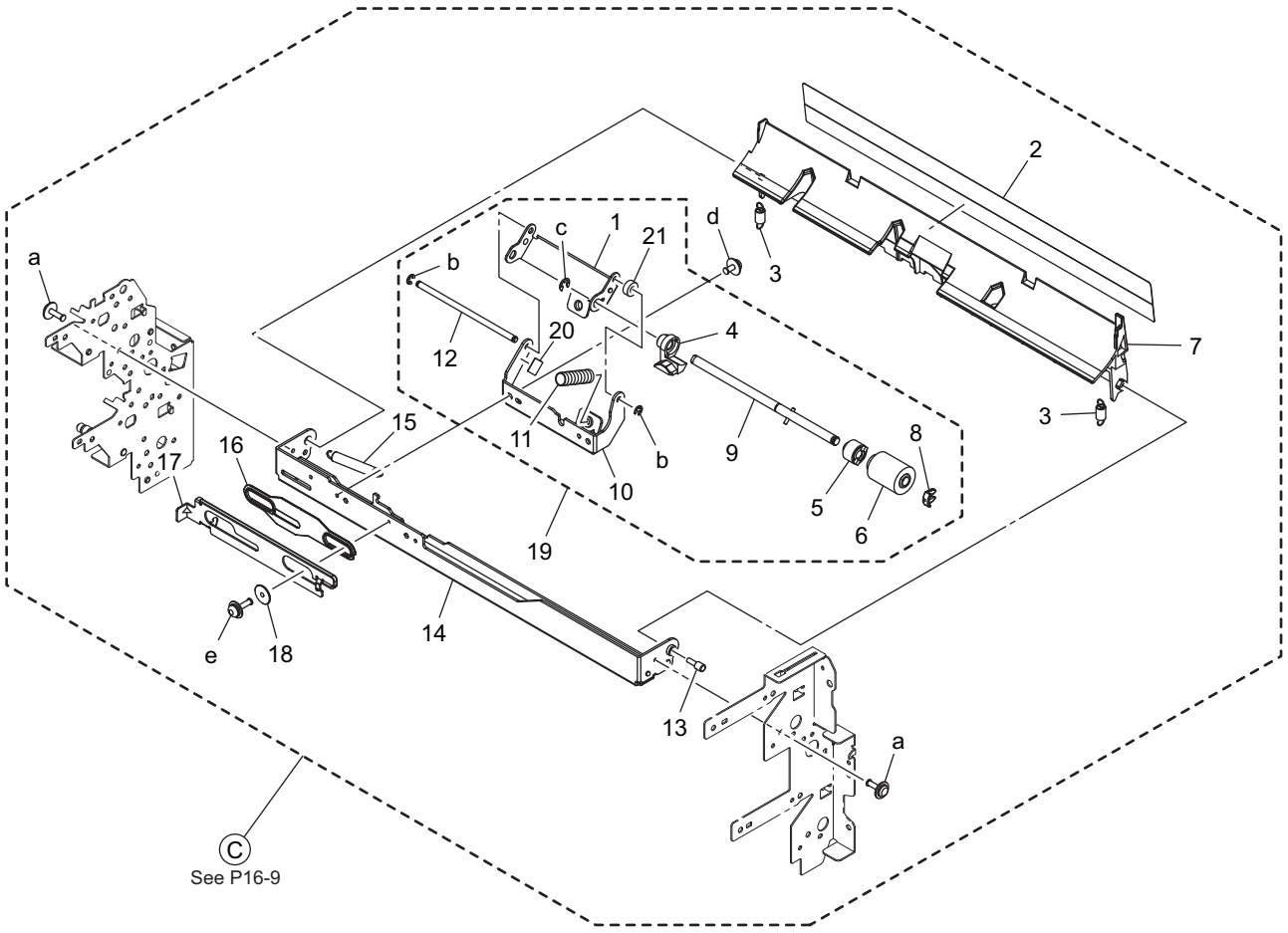

Page	Key	Parts No.	Description	Service Manual	Destinations	Class	Quantity
18	1	A5C1563100	Holder			D	1
18	2	A161568500	Guide			C	1
18	3	A161568600	Pulling Coil spring			C	2
18	4	A5C1563500	Guide			D	1
18	5	A0ED563900	Torque limiter			C	1
18	6	A00J563600	Roller			A	1
18	7	A161568401	Guide Plate			C	1
18	8	56AA40490	SHAFT STOPPER 4			C	1
18	9	A5C1563400	Shaft			D	1
18	10	A161564001	Mounting Plate			D	1
18	11	4030301703	PRESSURE SPRING			C	1

18	12	A161563300	Shaft			D	1
18	13	4532341001	SHOULDER SCREW			D	1
18	14	A161563901	Mounting Plate			D	1
18	15	A161564400	Pulling Coil spring			C	1
18	16	A161564200	Spacer			D	1
18	17	A5C1564100	Lever			D	1
18	18	A161564300	Spacer			D	1
18	19	A5C1R70800	Separation Roller Assy			C	1
18	20	A5C1565600	Sheet			C	1
18	21	4040561000	Spacer			D	1
18	a	V137030803	screw			V	
18	b	V217030001	E Ring			V	
18	c	V217040001	E Ring			V	
18	d	V116030603	Screw			V	
18	e	V116031003	Screw			V	

1.14 2ND PAPER FEED SECTION

1.14.1 P19

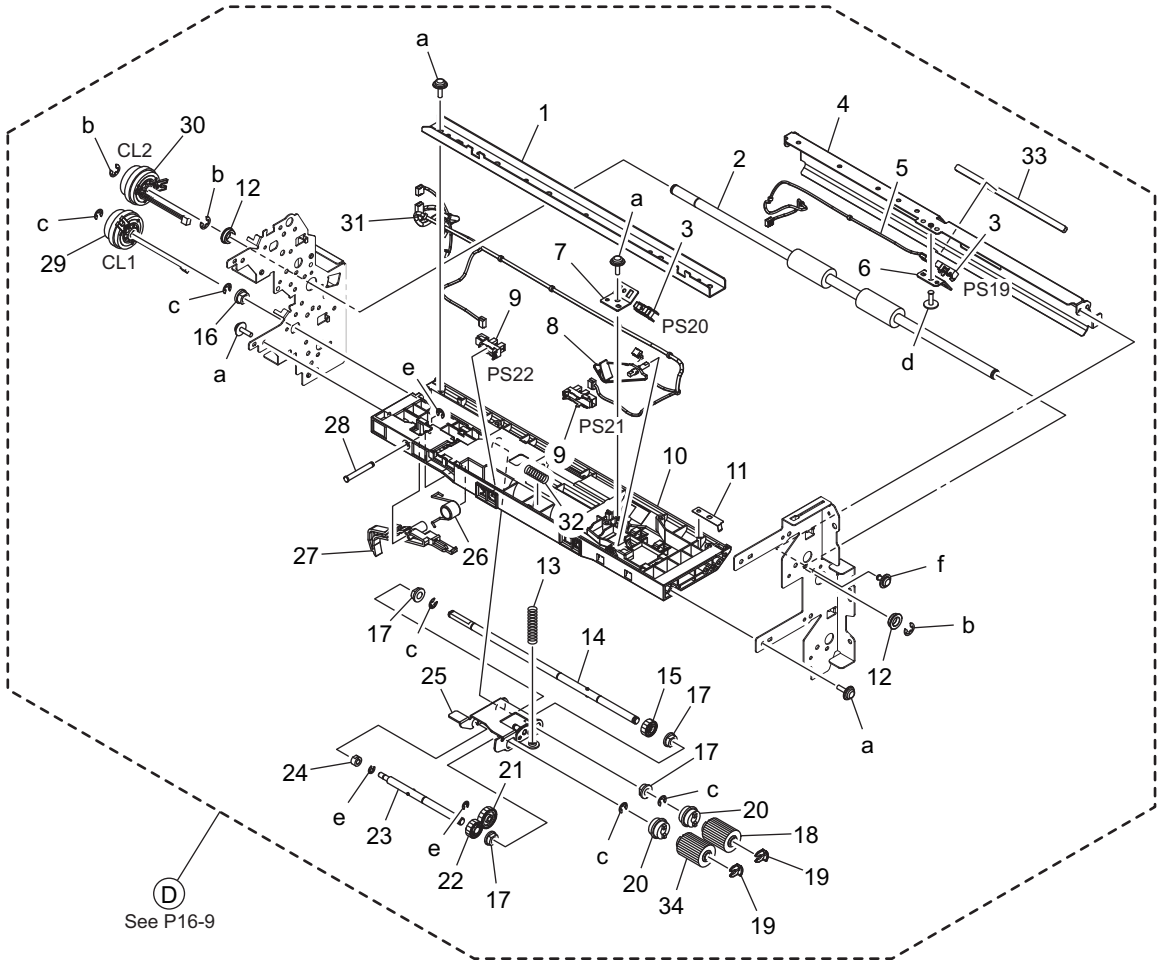

Page	Key	Parts No.	Description	Service Manual	Destinations	Class	Quantity
19	1	A161561000	Reinforce Plate			D	1
19	2	A161578100	Drive Roller			C	1
19	3	A0EDM50100	Photoreflector	Tray 2 vertical transport sensor (PS19) Tray 2 paper feed sensor (PS20)		I	2
19	4	A161578200	Guide Plate			D	1
19	5	A161N12701	Conveyance Detection harness			D	1

19	6	A161571100	Mounting Plate			D	1
19	7	A161560900	Mounting Plate			D	1
19	8	A161561600	Actuator			C	1
19	9	A108M50100	Photointerrupter	Tray 2 paper empty sensor (PS21) Tray 2 upper limit sensor (PS22)		B	2
19	10	A161560300	Paper feed Frame			D	1
19	11	A161560600	Ground Plate			D	1
19	12	A00J617900	Ball Bearing			B	2
19	13	A161562800	Compressing Coil spring			C	1
19	14	A161560500	Shaft			D	1
19	15	A161562400	Gear 26T			C	1
19	16	A00J663200	Bushing			C	1
19	17	4131300301	BUSHING			C	4
19	18	A00J563600	Roller			A	1
19	19	56AA40490	SHAFT STOPPER 4			C	2
19	20	A02E561100	Clutch			C	2
19	21	A161562300	Gear 34T			C	1
19	22	A161562600	Gear 28T			C	1
19	23	A161562000	Shaft			D	1
19	24	A161562500	Bushing			C	1
19	25	A161562101	Holder			D	1
19	26	A161567400	Torsion Spring			C	1
19	27	A161567300	Lever			C	1
19	28	A02E560800	Shaft			D	1
19	29	A02EM20200	Clutch	Tray 2 paper feed clutch (CL1)		B	1
19	30	A02EM20000	Clutch	Tray 2 vertical transport clutch (CL2)		B	1
19	31	A161N10Q02	Paperfeed Wiring /2			D	1
19	32	A161563000	Compressing Coil spring			C	1
19	33	A161578700	Cushion			C	1
19	34	A5C1562200	Roller			A	1
19	a	V153030803	Screw			V	
19	b	V217050001	E ring			V	
19	c	V217040001	E Ring			V	
19	d	V137030803	screw			V	
19	e	V217030001	E Ring			V	
19	f	V144030603	Screw			V	

1.14.2 P20

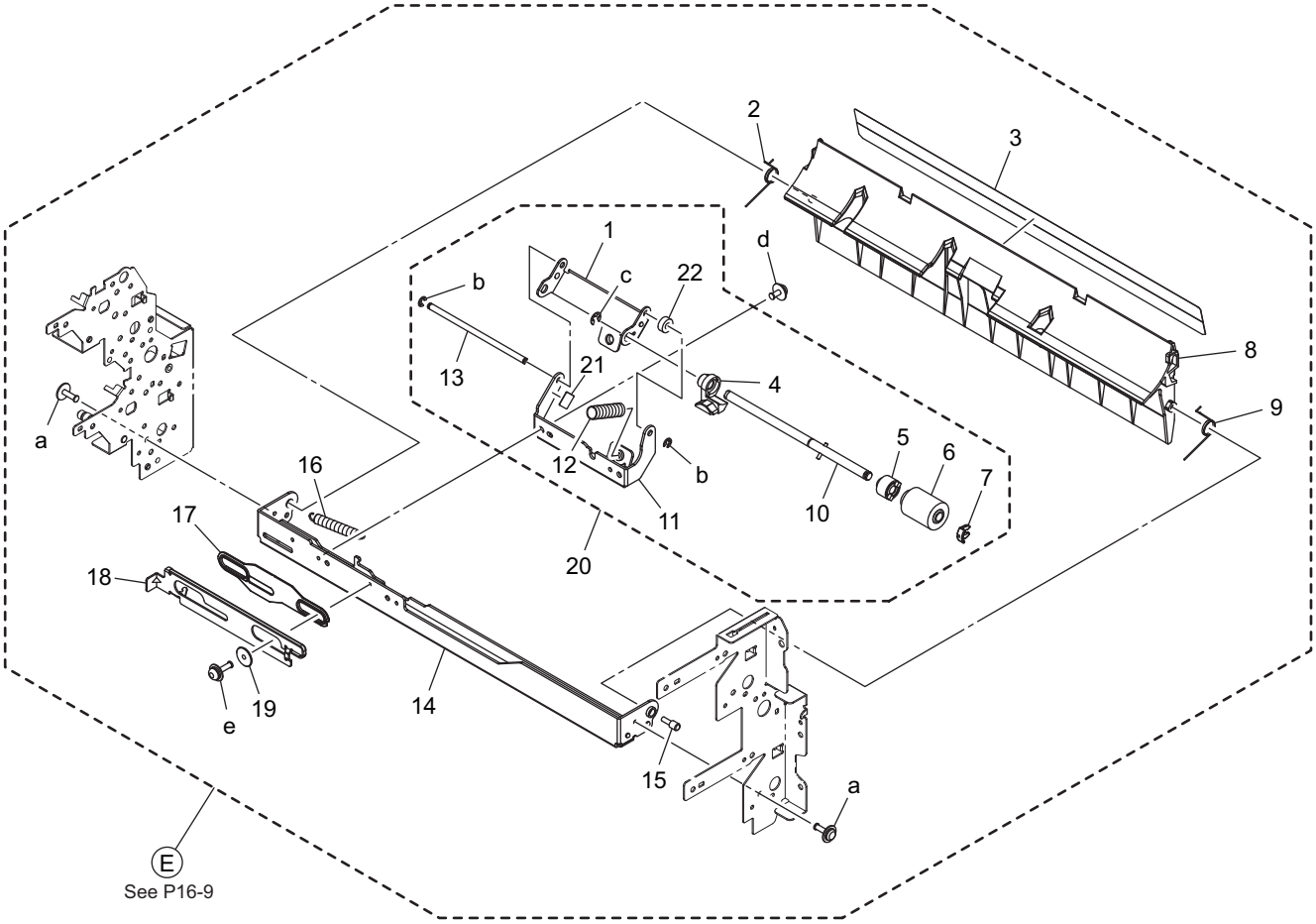

Page	Key	Parts No.	Description	Service Manual	Destinations	Class	Quantity
20	1	A5C1563100	Holder			D	1
20	2	A161568800	Torsion Coil spring			C	1
20	3	A161578500	Guide			C	1
20	4	A5C1563500	Guide			D	1
20	5	A0ED563900	Torque limiter			C	1
20	6	A00J563600	Roller			A	1
20	7	56AA40490	SHAFT STOPPER 4			C	1
20	8	A161578401	Guide Plate			C	1
20	9	A161568700	Torsion Coil spring			C	1
20	10	A5C1563400	Shaft			D	1
20	11	A161564001	Mounting Plate			D	1
20	12	4030301703	PRESSURE SPRING			C	1
20	13	A161563300	Shaft			D	1
20	14	A161563901	Mounting Plate			D	1
20	15	4532341001	SHOULDER SCREW			D	1
20	16	A161564400	Pulling Coil spring			C	1
20	17	A161564200	Spacer			D	1
20	18	A5C1564100	Lever			D	1
20	19	A161564300	Spacer			D	1
20	20	A5C1R70800	Separation Roller Assy			C	1
20	21	A5C1565600	Sheet			C	1
20	22	4040561000	Spacer			D	1
20	a	V137030803	screw			V	
20	b	V217030001	E Ring			V	

20	c	V217040001	E Ring			V	
20	d	V116030603	Screw			V	
20	e	V116031003	Screw			V	

1.15 CASSETTE RAIL SECTION

1.15.1 P21

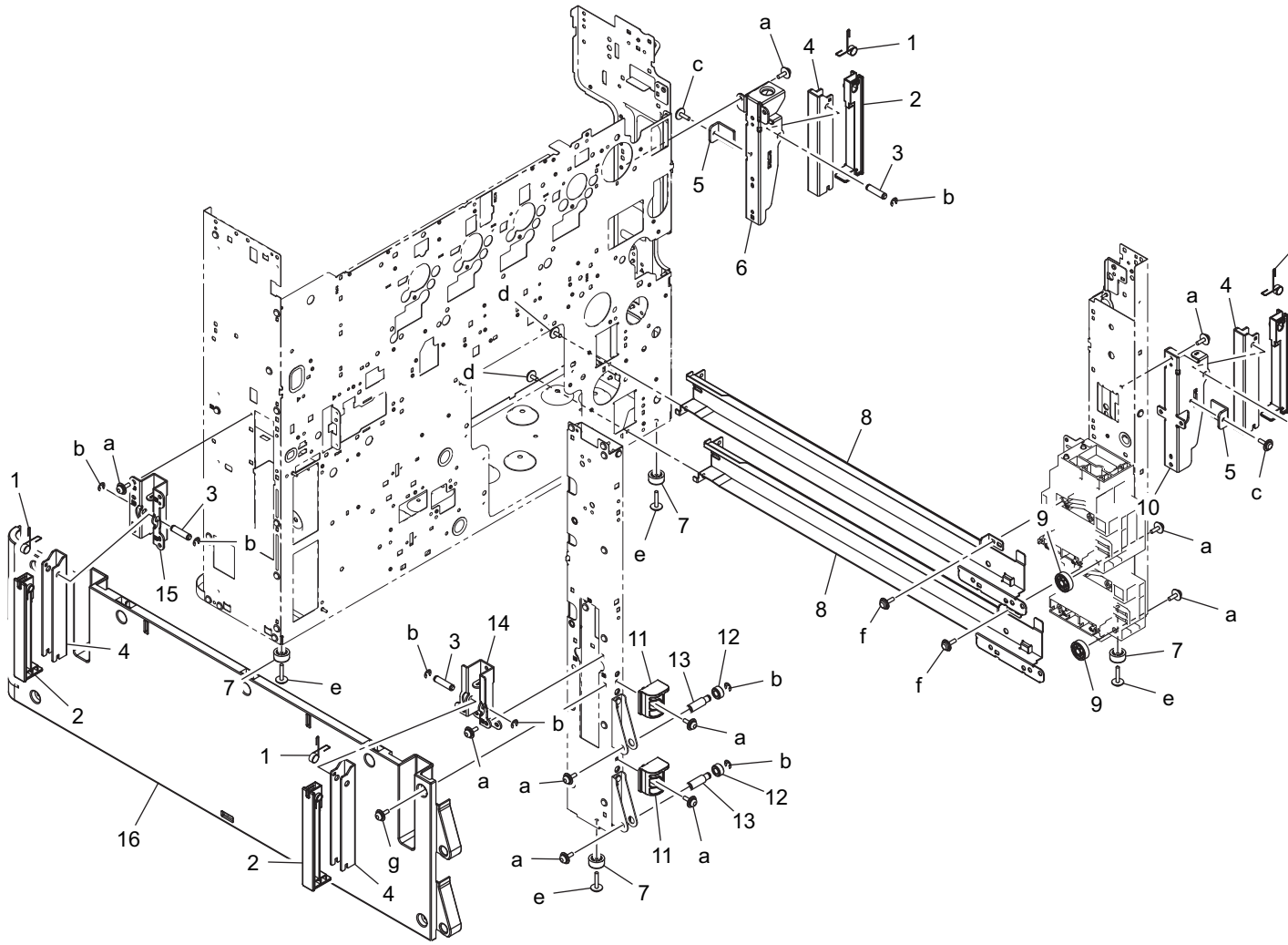

Page	Key	Parts No.	Description	Service Manual	Destinations	Class	Quantity
21	1	A161104300	Torsion Coil spring			D	4
21	2	A161103700	Cover			D	4
21	3	A161104200	Shaft			D	4
21	4	A161101900	Lever			D	4
21	5	A5C1104700	Mounting Plate			D	2
21	6	A5C1104800	Mounting Plate			D	1
21	7	996305501	RUBBER FOOT			C	4
21	8	A5C1101100	Rail			D	2
21	9	A161103901	Roll			D	2
21	10	A5C1104400	Mounting Plate			D	1
21	11	A161102300	Stopper			D	2
21	12	A161623400	Roll			D	2
21	13	A161105200	Shaft			D	2
21	14	A161101600	Mounting Plate			D	1
21	15	A161101700	Mounting Plate			D	1
21	16	A161104002	Holder			D	1
21	a	V116030803	Screw			V	
21	b	V217040001	E Ring			V	
21	c	V137030803	screw			V	

21	d	V144030603	Screw			V	
21	e	V137031203	screw			V	
21	f	V153030803	Screw			V	
21	g	V116030804	Screw			V	

1.16 PAPER SIZE DETECTION SECTION

1.16.1 P22

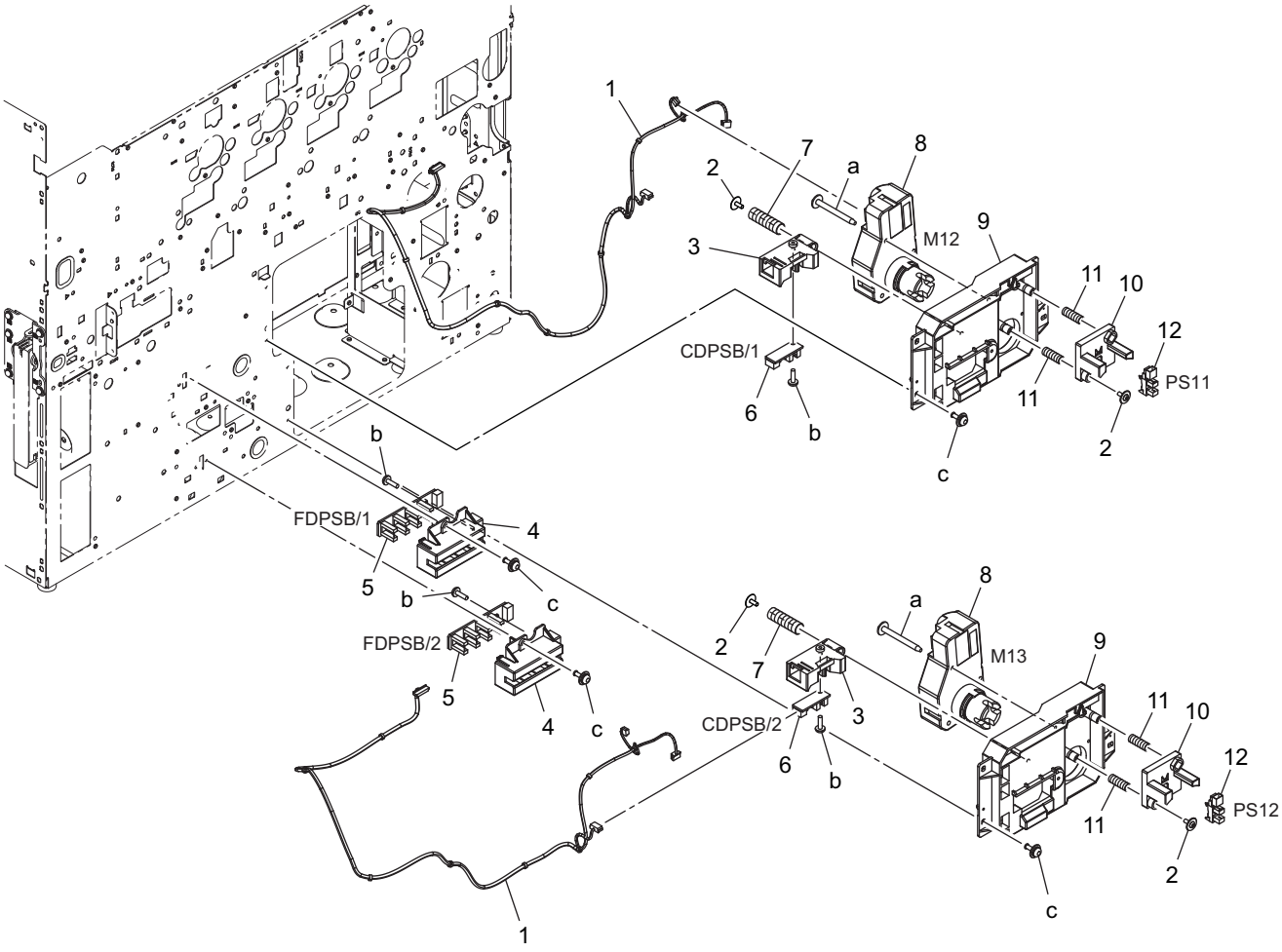

Page	Key	Parts No.	Description	Service Manual	Destinations	Class	Quantity
22	1	A161N10N01	Paper feed Wiring /Rear			D	2
22	2	4163529301	SCREW			C	4
22	3	A5C1627500	Holder			C	2
22	4	A5C1628000	Holder			C	2
22	5	A161M50600	Photointerrupter	Tray 1 FD paper size board (FDPSB/1) Tray 2 FD paper size board (FDPSB/2)		C	2
22	6	A161M50501	Photointerrupter	Tray 1CD paper size board (CDPSB/1) Tray 2 CD paper size board (CDPSB/2)		C	2
22	7	4002311002	Pressure Spring			C	2
22	8	9J06M10300	MOTOR	Tray 1 lift-up motor (M12) Tray 2 lift-up motor (M13)		B	2
22	9	A5C1627100	Holder			D	2
22	10	A5C1627300	Holder			D	2
22	11	A5C1627900	Compressing Coil spring			D	4
22	12	A108M50100	Photointerrupter	Tray 1 paper near empty sensor (PS11)		B	2

				Tray 2 paper near empty sensor (PS12)			
22	a	V153033003	screw			V	
22	b	V145030803	screw			V	
22	c	V116030803	Screw			V	

1.17 1ST CASSETTE SECTION

1.17.1 P23

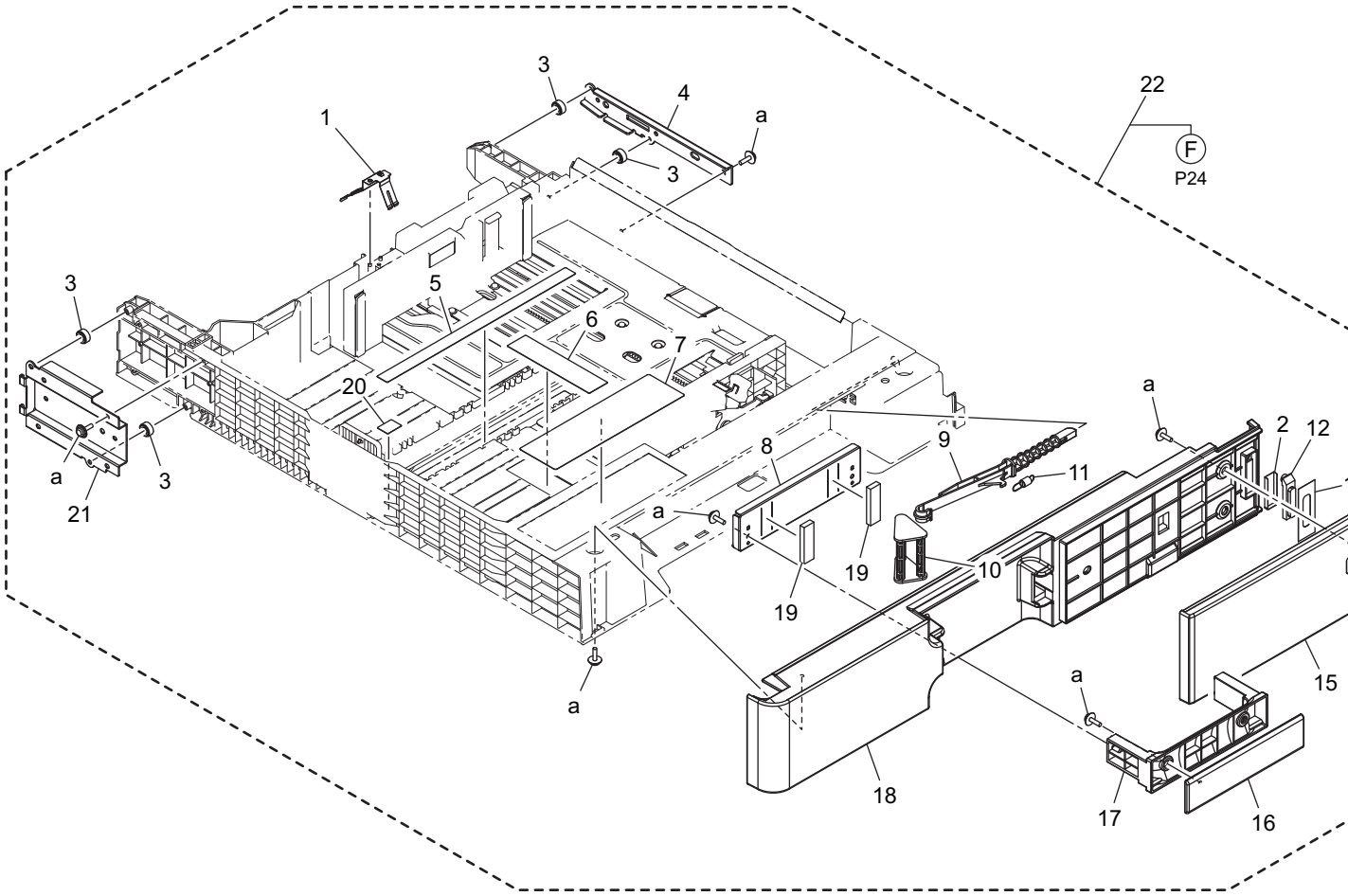

Page	Key	Parts No.	Description	Service Manual	Destinations	Class	Quantity
23	1	A161622100	Ground Plate			D	1
23	2	A161626200	Sheet			D	1
23	3	A161623400	Roll			D	4
23	4	A161623101	Reinforce Plate /Right			D	1
23	5	A00J942202	Label FD			C	1
23	6	A02E941500	Label CD			C	1
23	7	A161943802	Label			C	1
23	8	A161626300	Holder			D	1
23	9	A161626502	Lever			C	1
23	10	A161626601	Lever			C	1
23	11	A161626800	Pulling Coil spring			C	1
23	12	A161626000	Lens			D	1
23	13	A161626100	Light blocking Sheet			D	1
23	14	A161943100	Label 1			C	1
23	15	A161625012	Cover			C	1
23	16	A161625900	Cover			C	1
23	17	A161626900	Handle			C	1

23	18	A161625114	Cover			C	1
23	19	A5C1628100	Cushion			D	2
23	20	A02E941300	Label Fd			C	1
23	21	A161623301	Reinforce Plate /Left			D	1
23	22	A161F6201K	1st Cassette			S	1
23	a	V153030803	Screw			V	

1.17.2 P24

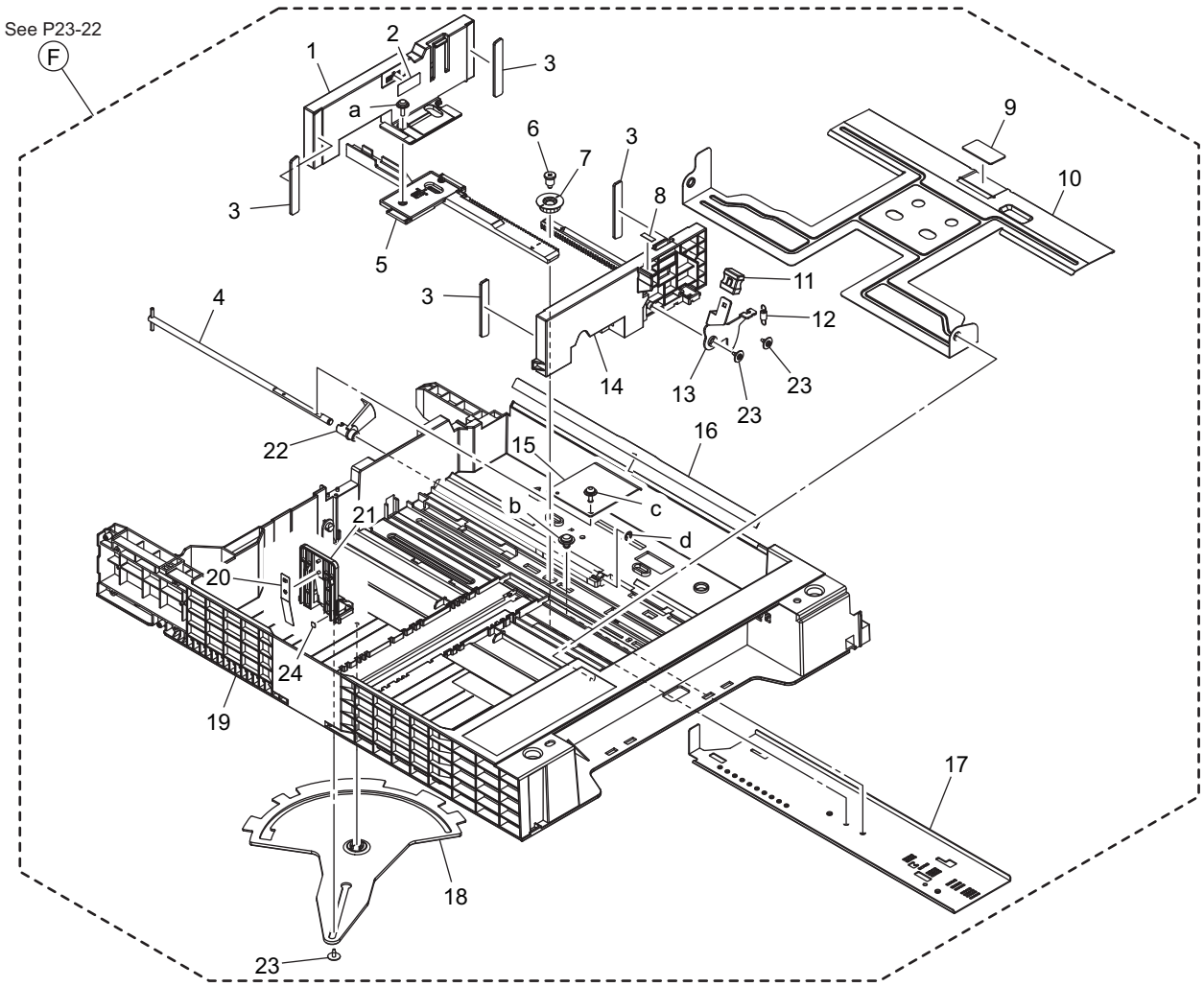

Page	Key	Parts No.	Description	Service Manual	Destinations	Class	Quantity
24	1	A161620903	Regulating Plate /Rear			C	1
24	2	A161943700	Label Max Level			C	1
24	3	A161624100	Cushion			C	4
24	4	A161621600	Lifting Shaft			D	1
24	5	A161621100	Rack			C	1
24	6	A161620600	Shoulder screw			D	1
24	7	A161620701	Gear			D	1
24	8	A161943000	Label			C	1
24	9	4030322601	FRICTION SHEET			C	1
24	10	A161620400	Lifting Plate			D	1
24	11	4037320401	KNOB			C	1
24	12	A0ED621400	Pulling Coil spring			D	1
24	13	A161621300	Lever			D	1
24	14	A161620802	Regulating Plate /Front			C	1
24	15	4030320601	LEVER			D	1
24	16	A0ED620200	Guide			C	1
24	17	A161621900	Mounting Plate			D	1

24	18	A161621411	Lever			C	1
24	19	A161620103	Paper feed Cassette			D	1
24	20	A161621800	Plate spring			C	1
24	21	A161621701	Regulating Plate			C	1
24	22	A0ED620701	Actuator			C	1
24	23	4163529301	SCREW			C	3
24	24	A02E940300	Label			C	1
24	a	V153030803	Screw			V	
24	b	V144040603	SCREW			V	
24	c	V116030803	Screw			V	
24	d	V217040001	E Ring			V	

1.18 2ND CASSETTE SECTION

1.18.1 P25

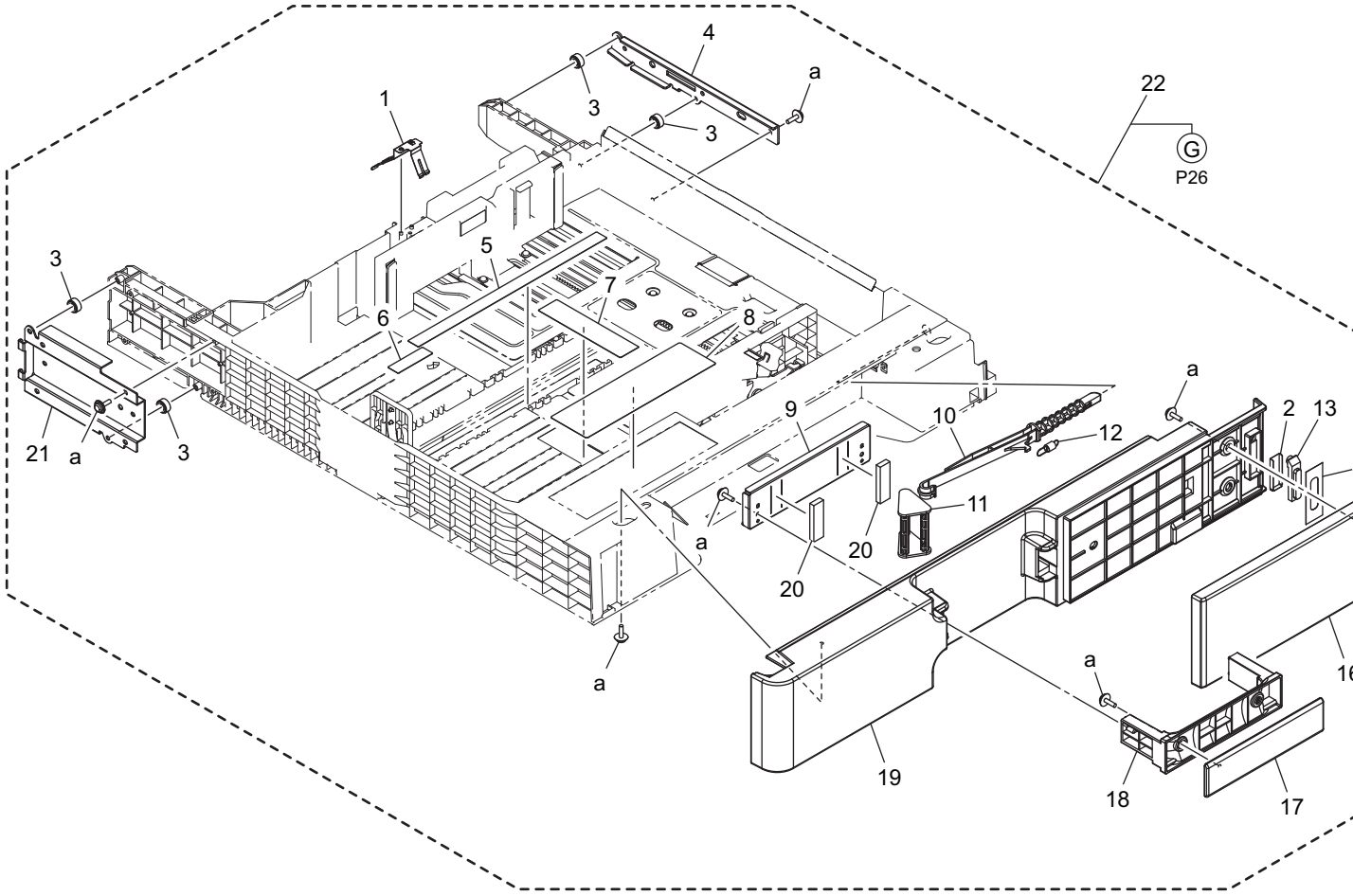

Page	Key	Parts No.	Description	Service Manual	Destinations	Class	Quantity
25	1	A161622100	Ground Plate			D	1
25	2	A161626200	Sheet			D	1
25	3	A161623400	Roll			D	4
25	4	A161633101	Reinforce Plate /Right			D	1
25	5	A00J942202	Label FD			C	1
25	6	A161943500	Label			C	1
25	7	A161943601	Label			C	1
25	8	A161943802	Label			C	1
25	9	A161626300	Holder			D	1
25	10	A161636502	Lever			C	1
25	11	A161626601	Lever			C	1

25	12	A161626800	Pulling Coil spring			C	1
25	13	A161626000	Lens			D	1
25	14	A161626100	Light blocking Sheet			D	1
25	15	A161943200	Label 2			C	1
25	16	A161635012	Cover			C	1
25	17	A161625900	Cover			C	1
25	18	A161626900	Handle			C	1
25	19	A161635115	Cover			C	1
25	20	A5C1628100	Cushion			D	2
25	21	A161633202	Reinforce Plate /Left			D	1
25	22	A161F6301L	2nd Cassette			S	1
25	a	V153030803	Screw			V	

1.18.2 P26

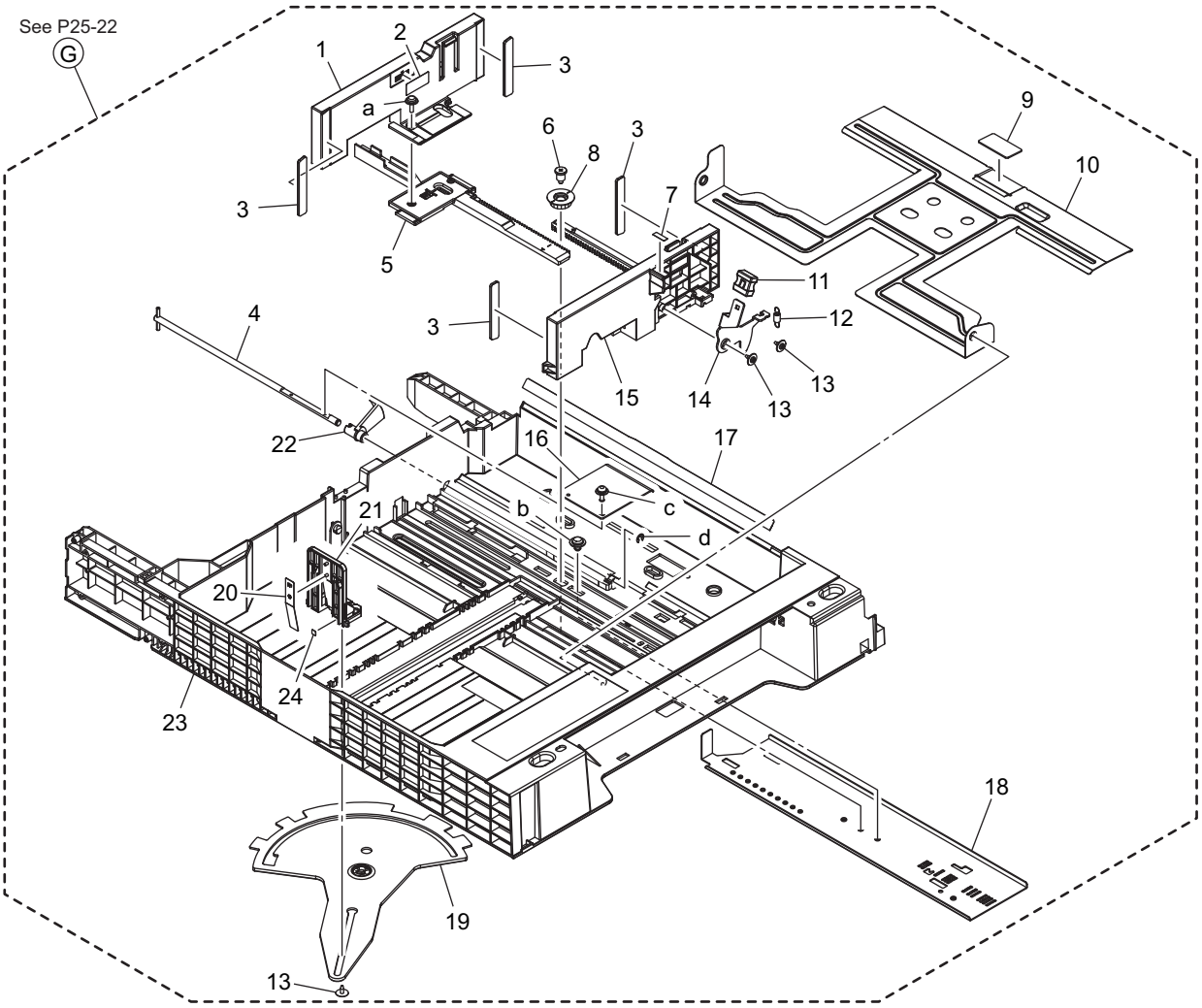

Page	Key	Parts No.	Description	Service Manual	Destinations	Class	Quantity
26	1	A161620903	Regulating Plate /Rear			C	1
26	2	A161943700	Label Max Level			C	1
26	3	A161624100	Cushion			C	4
26	4	A161621600	Lifting Shaft			D	1
26	5	A161621100	Rack			C	1
26	6	A161620600	Shoulder screw			D	1
26	7	A161943000	Label			C	1
26	8	A161620701	Gear			D	1
26	9	4030322601	FRICTION SHEET			C	1
26	10	A161620400	Lifting Plate			D	1
26	11	4037320401	KNOB			C	1

26	12	A0ED621400	Pulling Coil spring			D	1
26	13	4163529301	SCREW			C	3
26	14	A161621300	Lever			D	1
26	15	A161620802	Regulating Plate /Front			C	1
26	16	4030320601	LEVER			D	1
26	17	A0ED620200	Guide			C	1
26	18	A161621900	Mounting Plate			D	1
26	19	A161631411	Lever			C	1
26	20	A161621800	Plate spring			C	1
26	21	A161621701	Regulating Plate			C	1
26	22	A0ED620701	Actuator			C	1
26	23	A161630102	Paper feed Cassette			D	1
26	24	A02E940300	Label			C	1
26	a	V153030803	Screw			V	
26	b	V144040603	SCREW			V	
26	c	V116030803	Screw			V	
26	d	V217040001	E Ring			V	

1.19 CONVEYANCE SECTION

1.19.1 P27

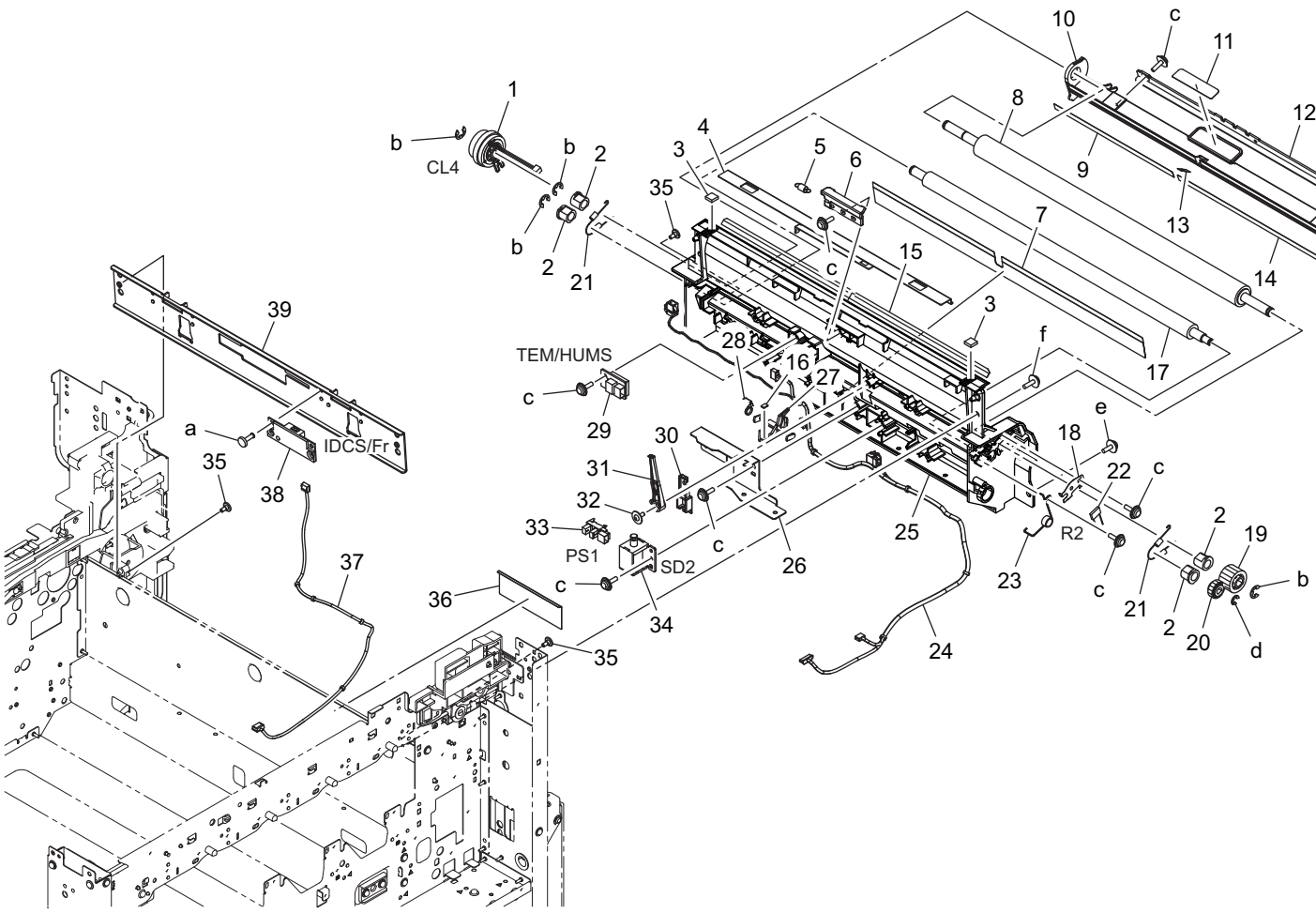

Page	Key	Parts No.	Description	Service Manual	Destinations	Class	Quantity
27	1	A02EM20000	Clutch	Registration clutch (CL4)		B	1
27	2	A161702200	Bushing			C	4
27	3	A161701900	Seal /A			D	2
27	4	A0ED705800	Cover			D	1
27	5	A0ED702800	Pulling Spring			D	1

27	6	A161706001	Holding Shutter			D	1
27	7	A5C1701400	Guide Sheet /B			D	1
27	8	A5C1700101	Roller			C	1
27	9	4038353701	GUIDE			C	1
27	10	A161700600	Guide Plate /Middle			D	1
27	11	A161946300	Label M2			D	1
27	12	A02E712902	Reinforce Plate			D	1
27	13	4038353901	GUIDE			C	1
27	14	A0ED700600	Guide Sheet			D	1
27	15	A161701301	Guide Sheet /A			C	1
27	16	A161702100	Cushion /C			C	1
27	17	A0ED700200	Roller			D	1
27	18	A161700800	Ground Plate /D			D	1
27	19	A0ED700300	Gear 20T			D	1
27	20	A0ED700700	Gear 14T			D	1
27	21	A161702000	Conveyance Spring /A			C	2
27	22	V800500300	FIXED POWER RESISTORS			D	1
27	23	A0ED703200	Torsion Coil spring			D	1
27	24	A161N10D00	Conveyance Detection harness /L			D	1
27	25	A161700107	Guide Plate /Inside			D	1
27	26	A161700300	Mounting Plate /B			D	1
27	27	A161701703	Actuator /T			C	1
27	28	A161701100	Spring /A			C	1
27	29	A0P0M50400	Humidity sensor	Temperature/humidity sensor (TEM/HUMS)		C	1
27	30	A161700700	Arm /2			D	1
27	31	A161700401	Arm /1			D	1
27	32	4163529301	SCREW			C	1
27	33	A108M50100	Photo interrupter	Registration sensor (PS1)		B	1
27	34	A034M20100	Conveyance Solenoid	IDC sensor shutter solenoid (SD2)		C	1
27	35	4011585202	SHOULDER SCREW			C	3
27	36	A161701800	Protection Sheet			D	1
27	37	A61FN12H01	Sensor Wiring			D	1
27	38	A161M50000	Photo sensing	IDC sensor/Fr (IDCS/Fr)		I	1
27	39	A161700901	Reinforce Plate			D	1
27	a	V118030803	screw			V	
27	b	V217060001	E Ring			V	
27	c	V153030803	Screw			V	
27	d	V217040001	E Ring			V	
27	e	V116030803	Screw			V	
27	f	V153031003	screw			V	

1.20 VERTICAL TRANSPORT SECTION

1.20.1 P28

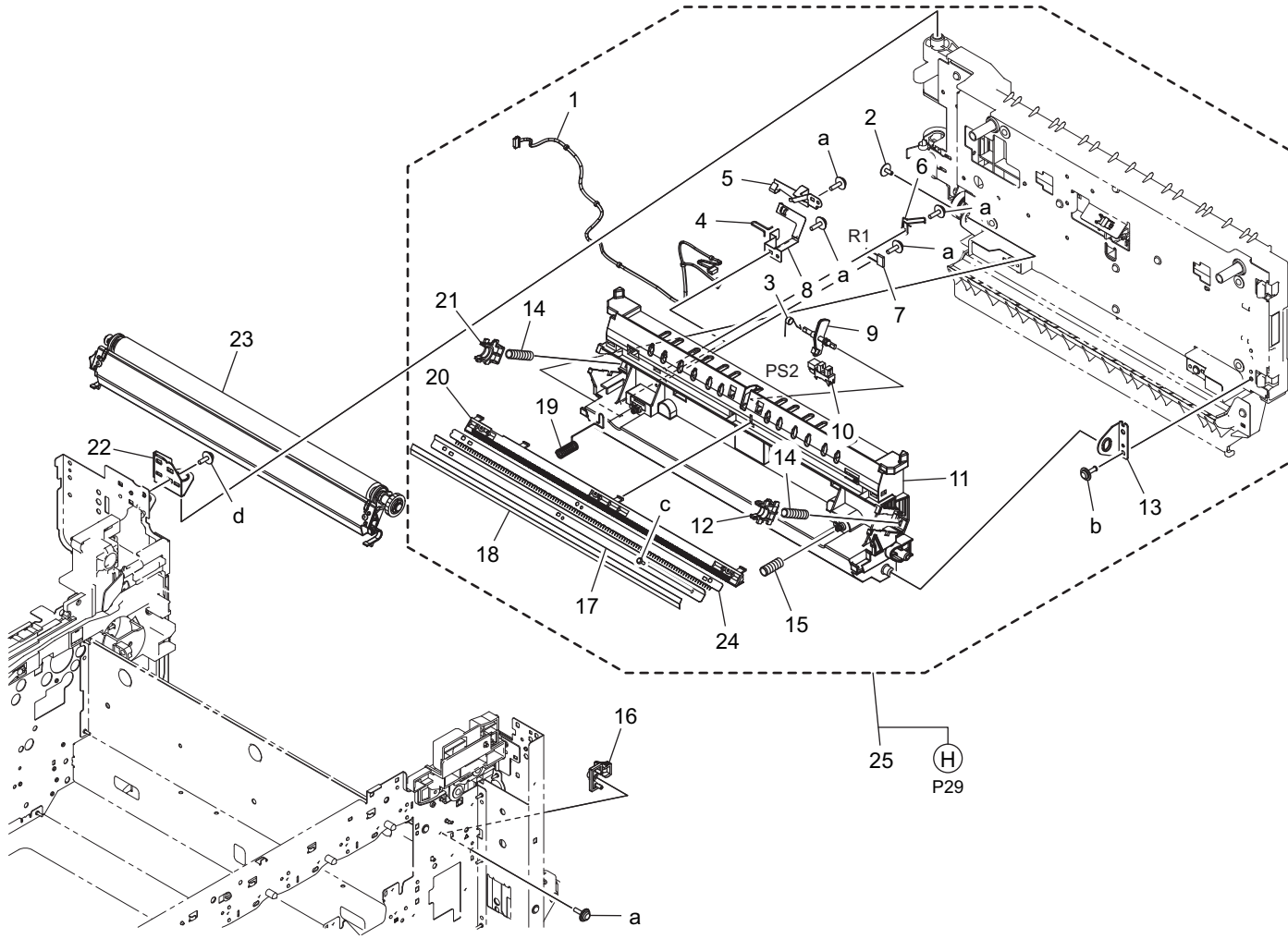

Page	Key	Parts No.	Description	Service Manual	Destinations	Class	Quantity
28	1	A161N10H01	Conveyance Wiring			D	1
28	2	4163529301	SCREW			C	1
28	3	A161712700	Spring /C			D	1
28	4	A161712400	Ground Spring /A			D	1
28	5	A161711100	Ground Plate /C			D	1
28	6	A5C1711000	Ground Spring /B			D	1
28	7	V800500300	FIXED POWER RESISTORS			D	1
28	8	A161710900	Ground Plate /A			D	1
28	9	A0ED703800	Actuator			D	1
28	10	A108M50100	Photointerrupter	Fusing loop sensor (PS2)		B	1
28	11	A161710102	Holder /A			D	1
28	12	A161550700	Transfer Holder /2			C	1
28	13	A161711800	Support Plate /Front			D	1
28	14	A0ED551000	Compressing Coil spring /2			C	2
28	15	A0ED551100	Compressing Coil spring			D	1
28	16	A161712300	Fixing Part /Lower			D	1
28	17	A0ED550900	Mounting Plate			D	1
28	18	A5C1551701	Guide Seal			D	1
28	19	A161712500	Ground Spring /C			D	1
28	20	A161551600	Mounting Plate			D	1
28	21	A161551500	Transfer Holder /2			C	1
28	22	A161104101	Adjusting Plate			D	1

28	23	A161R71400	2nd Image Transfer Roller Assy			A	1
28	24	A0ED550800	Neutralizing Part			D	1
28	25	A61FR71800	Vertical Transport Assy			S	1
28	a	V153030803	Screw			V	
28	b	V137030803	screw			V	
28	c	V162020504	screw			V	
28	d	V116030803	Screw			V	

1.20.2 P29

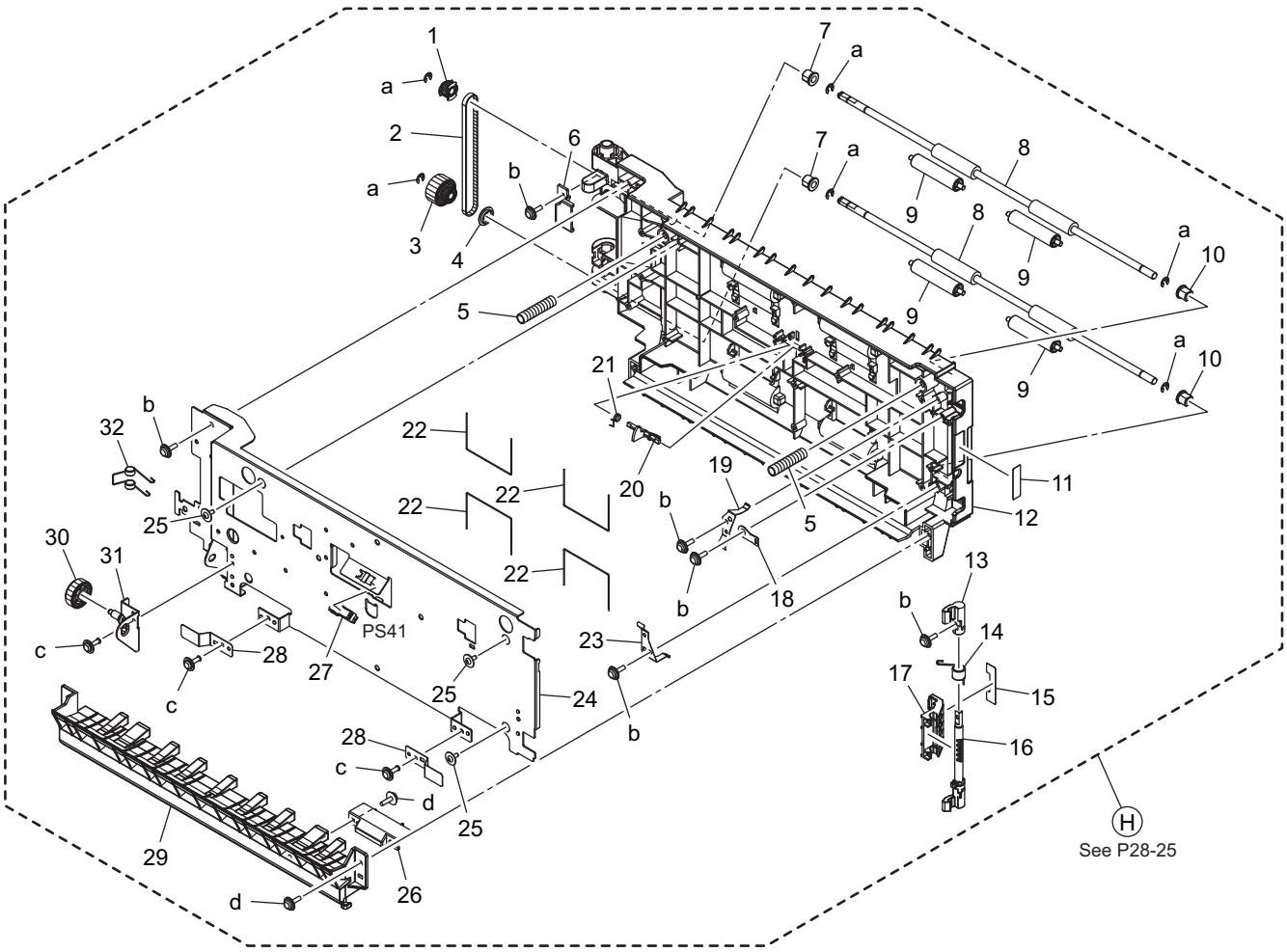

Page	Key	Parts No.	Description	Service Manual	Destinations	Class	Quantity
29	1	A0ED811700	Pulley 22T			C	1
29	2	A161719000	Drive Belt 266L			C	1
29	3	A161709100	Gear 22/23T			D	1
29	4	A0ED811900	Collar			D	1
29	5	A161711200	Pressing Spring			D	2
29	6	A161712600	Cover /C			D	1
29	7	A161713100	Bushing /1			D	2
29	8	A161710500	Roller /A			D	2
29	9	A161825700	Idler Roller /A			D	4
29	10	A02E815200	BUSHING			C	2
29	11	A161946400	Label M6			D	1
29	12	A161710203	Guide Plate /A			D	1
29	13	A161711300	Lock Shaft /A			C	1
29	14	A161711700	Spring /B			C	1
29	15	A161946200	Label M1			D	1

29	16	A5C1711500	Lock Shaft			C	1
29	17	A161711600	Open/close Lever			C	1
29	18	A161714500	Fixing Part			D	1
29	19	A161712000	Ground Plate /D			D	1
29	20	A161713500	Actuator			C	1
29	21	A161712800	Spring /D			D	1
29	22	A161714600	Conveyance Spring /B			D	4
29	23	A161712100	Ground Plate /E			D	1
29	24	A161710404	Mounting Plate			D	1
29	25	4163529301	SCREW			C	3
29	26	A161816300	Lock Plate			D	1
29	27	A108M50100	Photointerrupter	ADU paper passage sensor/2 (PS41)		B	1
29	28	A0ED702400	Plate spring			D	2
29	29	A161710300	Guide Plate /B			D	1
29	30	A161719100	Gear 23T			C	1
29	31	A161711900	Support Plate /Rear			D	1
29	32	A161712900	Ground Spring /D			D	1
29	a	V217040001	E Ring			V	
29	b	V153030803	Screw			V	
29	c	V137030803	screw			V	
29	d	V153031003	screw			V	

1.21 VERTICAL CONVEYANCE DOOR SECTION

1.21.1 P30

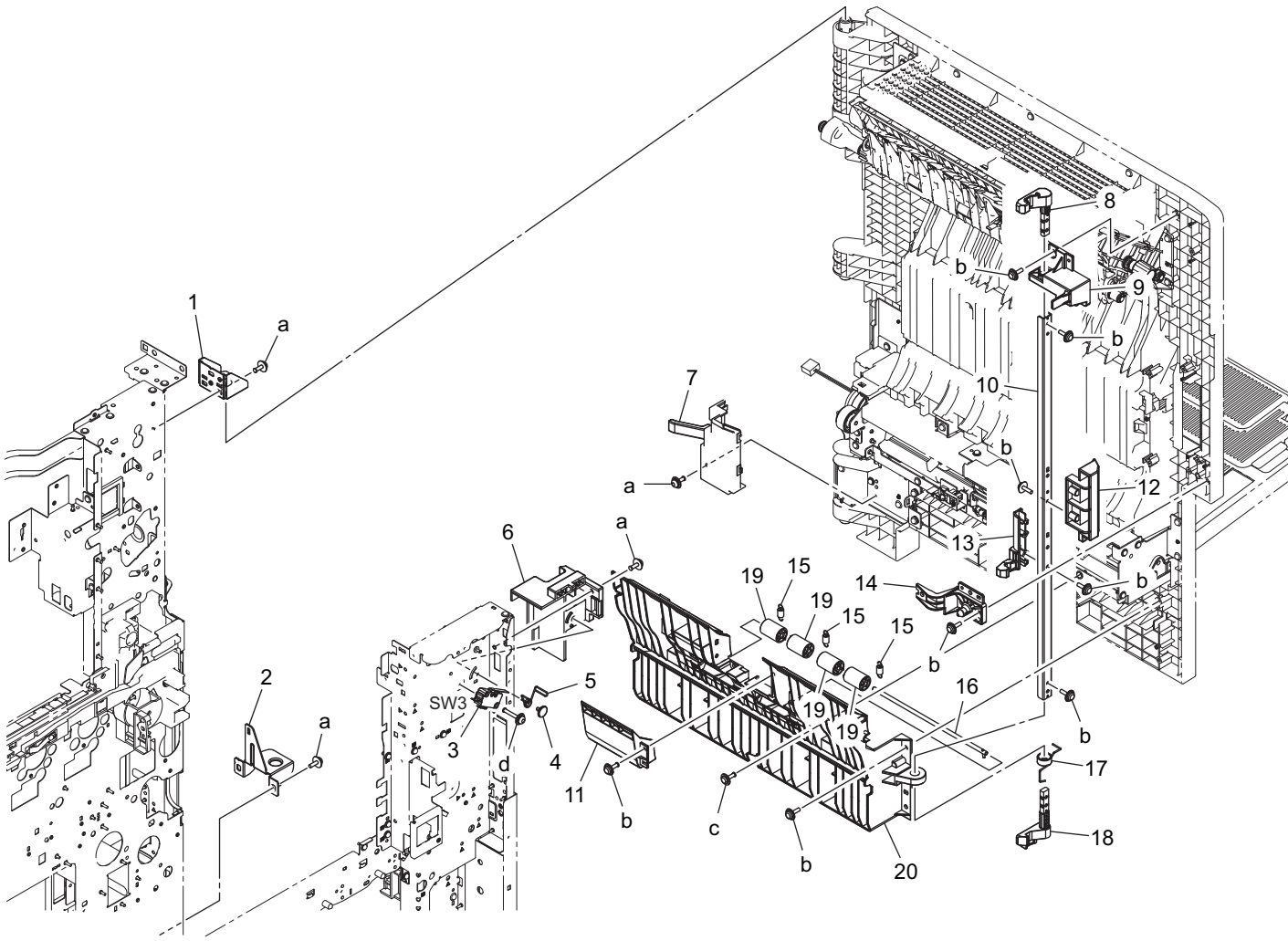

Page	Key	Parts No.	Description	Service Manual	Destinations	Class	Quantity

30	1	A161121300	Adjusting Plate			D	1
30	2	A161102500	Adjusting Plate			D	1
30	3	9J06M60100	MICRO SWITCH	Right door switch (SW3)		C	1
30	4	A161137100	Shoulder screw			D	1
30	5	A161151200	Torsion Coil spring			D	1
30	6	A161121200	Holder			D	1
30	7	A161592900	Wiring Cover /B			D	1
30	8	A0ED712100	Lock Claw			C	1
30	9	A161811500	Support Part /Upper			D	1
30	10	A161811001	Lock Plate			D	1
30	11	A5C1590500	Paper feed Guide			D	1
30	12	A161811100	Open/close Handle			C	1
30	13	A161815201	Lock /Middle			C	1
30	14	A161811302	Lock Part /Lower			D	1
30	15	A161815500	Pulling Spring			C	3
30	16	A161815300	Shaft			D	1
30	17	A161815900	Torsion Coil spring			C	1
30	18	A5C1811600	Lock Claw /Lower			C	1
30	19	A161815400	Roll			C	4
30	20	A161810303	Guide Plate /2			D	1
30	a	V116030803	Screw			V	
30	b	V153030803	Screw			V	
30	c	V137030804	screw			V	
30	d	V116031603	Screw			V	

1.22 BYPASS TRAY SECTION

1.22.1 P31

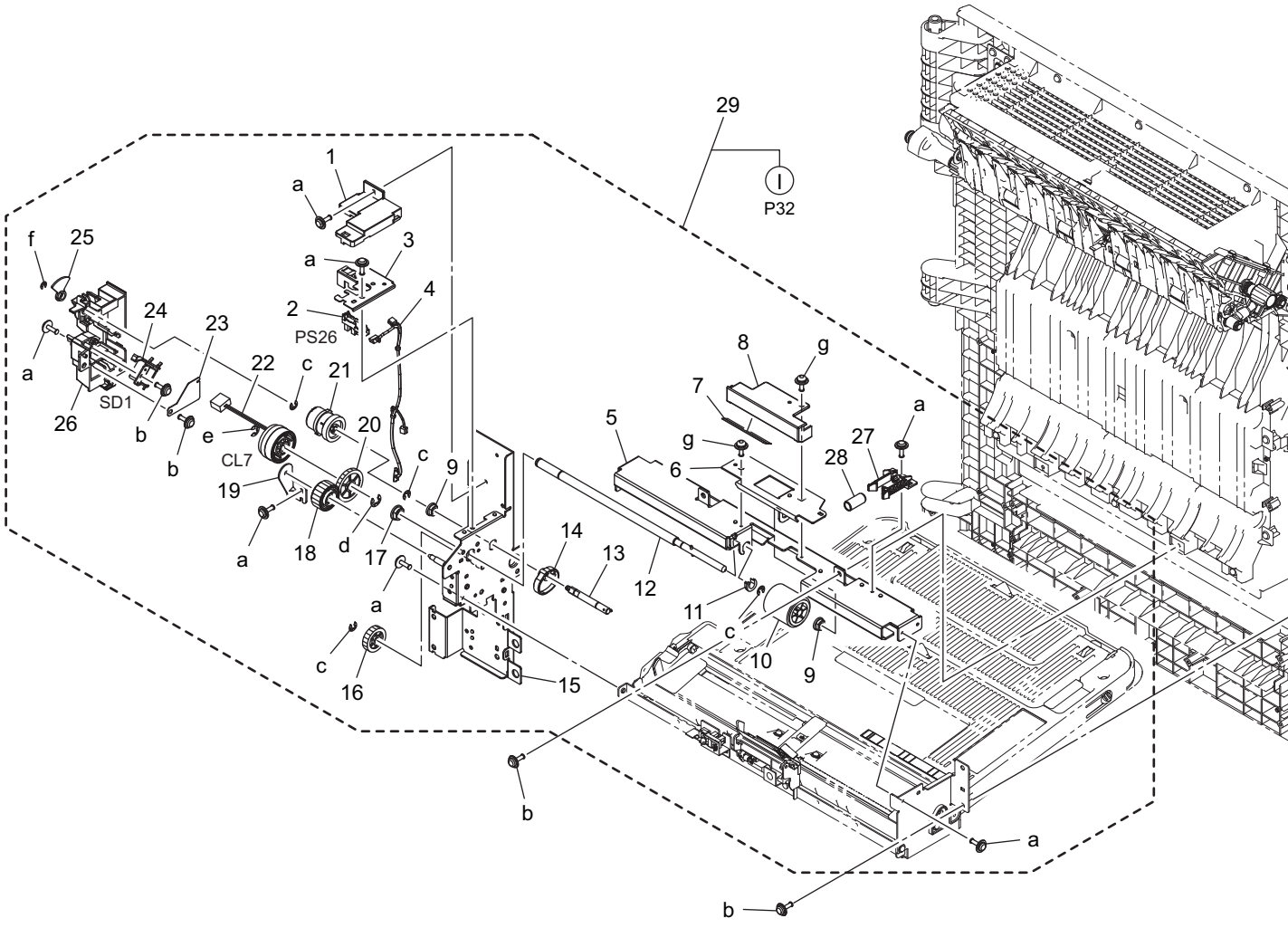

Page	Key	Parts No.	Description	Service Manual	Destinations	Class	Quantity
31	1	A161592801	Wiring Cover /A			D	1
31	2	A108M50100	Photointerrupter	Bypass lift-up position sensor (PS26)		B	1
31	3	A5C1591900	Mounting Plate			D	1
31	4	A161N12200	Paperfeed Drive harness / 1			D	1
31	5	A161590201	Paper feed Frame			D	1
31	6	A161594100	Reinforce Plate			D	1
31	7	A161594700	Guide Sheet			C	1
31	8	A161591700	Auxiliary Guide			D	1
31	9	A02E596300	Bushing			C	2
31	10	A00F623201	Roller			B	1
31	11	A161594400	Slide Stopper			C	1
31	12	A161591500	Paper feed Shaft			D	1
31	13	A161591400	Drive Shaft			D	1
31	14	A161593300	Paper feed Cam			C	1
31	15	A161F59001	Caulking(Mounting Plate Drive Frame)			D	1
31	16	A02E595400	Gear 22T			C	1
31	17	4131353202	BUSHING			C	1
31	18	A161590800	Bypass Gear 24T			C	1
31	19	A161590600	Reinforce Plate			D	1
31	20	A02E596100	Gear 30T			C	1
31	21	A02E595100	Clutch assy			C	1
31	22	A02EM20100	Clutch	Bypass paper feed clutch (CL7)		B	1
31	23	A0ED597800	Cover			D	1
31	24	9J06M20000	SOLENOID	Bypass pick-up solenoid (SD1)		B	1
31	25	A161591300	Light blocking Plate			C	1
31	26	A5C1591200	Drive Cover			D	1
31	27	A161594800	Hold Claw			C	1
31	28	A161594900	Coil spring			C	1
31	29	A61FR71700	Multiple Bypass tray Assy			S	1
31	a	V137030803	screw			V	
31	b	V153030803	Screw			V	
31	c	V217040001	E Ring			V	
31	d	V217060001	E Ring			V	
31	e	V217050001	E ring			V	
31	f	V217030001	E Ring			V	
31	g	V116030803	Screw			V	

1.22.2 P32

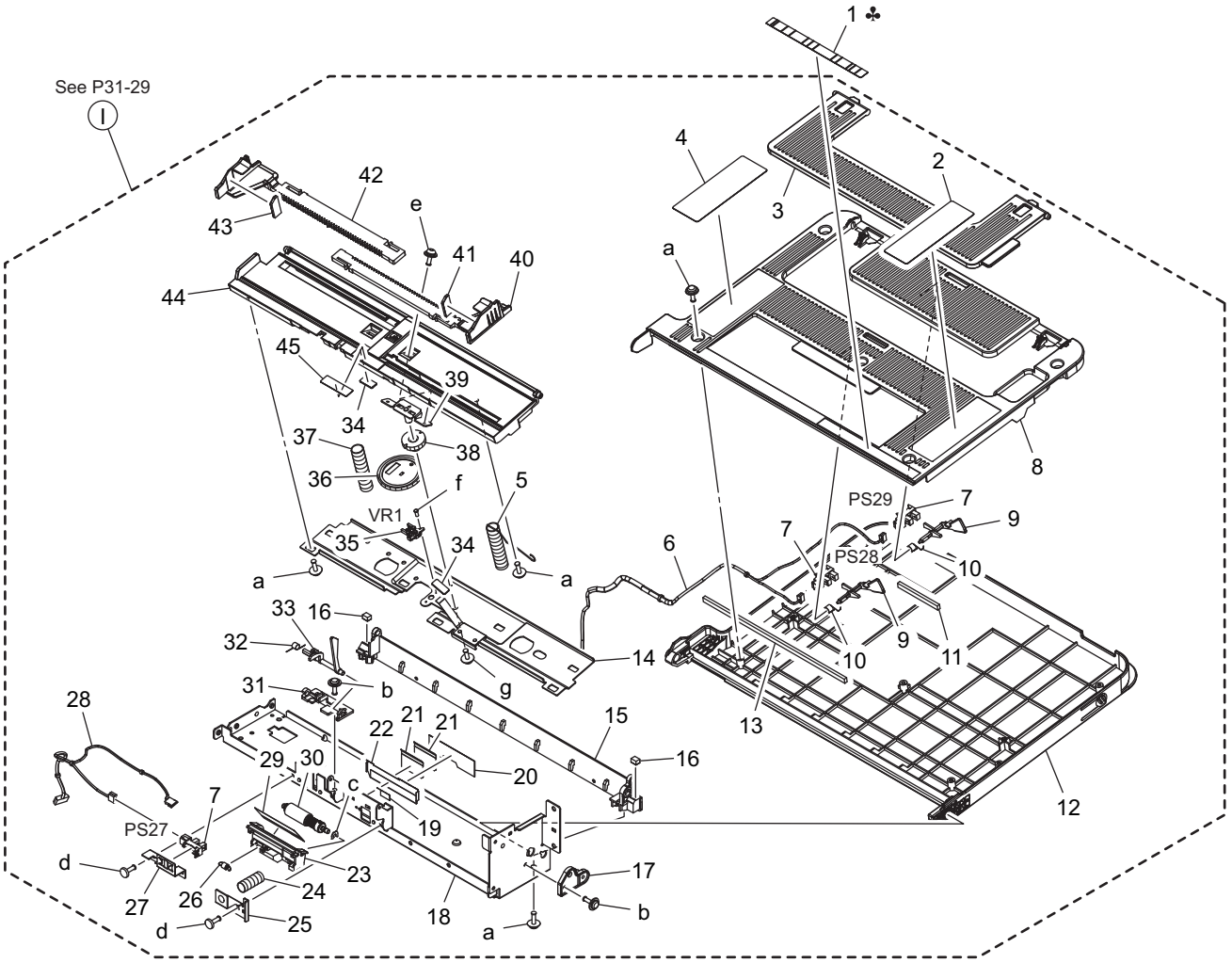

Page	Key	Parts No.	Description	Service Manual	Destinations	Class	Quantity
32	1	A161944101	Label Scale/Metric		A,A1,C,D1,D3,E,F2,G1,I,K	C	1
32	1	A161944201	Label Scale/Inch		B,G2	C	1
32	2	A161944300	Label Paper Supply 1			D	1
32	3	A161592200	Auxiliary Tray			C	1
32	4	A161944400	Label Paper Supply 2			D	1
32	5	A161593600	Compressing Coil spring			C	1
32	6	A161N11Q01	Paperfeed Detection harness /1			D	1
32	7	A108M50100	Photointerrupter	Bypass paper empty sensor (PS27) Bypass FD paper size sensor/1 (PS28) Bypass FD paper size sensor/2 (PS29)		B	3
32	8	A5C1592100	Bypass Tray /Upper			C	1
32	9	A161592400	Actuator			C	2
32	10	A161592501	Torsion Spring			C	2
32	11	A161592600	Holding Cover /2			D	1
32	12	A161592002	Bypass Tray			C	1
32	13	A161592300	Holding Cover			D	1
32	14	A161593701	Mounting Plate			D	1
32	15	A161590303	Support Holder			D	1
32	16	A161594201	Cushion			D	2
32	17	A161591600	Hold Plate			C	1
32	18	A161590101	Bypass Frame			D	1
32	19	A161595600	Slide Guide			C	1

32	20	A161595100	Seal			C	1
32	21	4030340301	GUIDE			C	2
32	22	A161595300	Separating Plate			C	1
32	23	A161595000	Holder			D	1
32	24	4030347501	PRESSURE SPRING			C	1
32	25	A161595400	Hold Plate			D	1
32	26	A161595200	Pulling Coil spring			C	1
32	27	A161591800	Sensor Holder			D	1
32	28	A161N10X00	Paperfeed Detection harness /2			D	1
32	29	A02E597600	Guide			C	1
32	30	4658015106	Roller Assy			A	1
32	31	A161591100	Sensor Holder			D	1
32	32	A161591000	Torsion Spring			C	1
32	33	A161590901	Actuator			C	1
32	34	A161593800	Friction Plate			C	2
32	35	A161M50400	VR	Bypass CD paper size VR (VR1)		D	1
32	36	A161594300	Regulating Gear 41T			C	1
32	37	A161593400	Compressing Coil spring			C	1
32	38	A02E592100	Gear 20T			C	1
32	39	A161R7A000	Caulking Gear Mounting Plate			D	1
32	40	A5C1593100	Regulating Plate /L			C	1
32	41	A161594600	Brake Part /F			C	1
32	42	A5C1593200	Regulating Plate /R			C	1
32	43	A161594500	Brake Part			C	1
32	44	A161593001	Lifting Plate			D	1
32	45	A161594000	Separating Sheet			C	1
32	a	V153030803	Screw			V	
32	b	V137030803	screw			V	
32	c	V218030086	E ring			V	
32	d	V118030803	screw			V	
32	e	V116030804	Screw			V	
32	f	V111170403	screw			V	
32	g	V116030803	Screw			V	

1.23 REVERSAL UNIT

1.23.1 P33

P 33

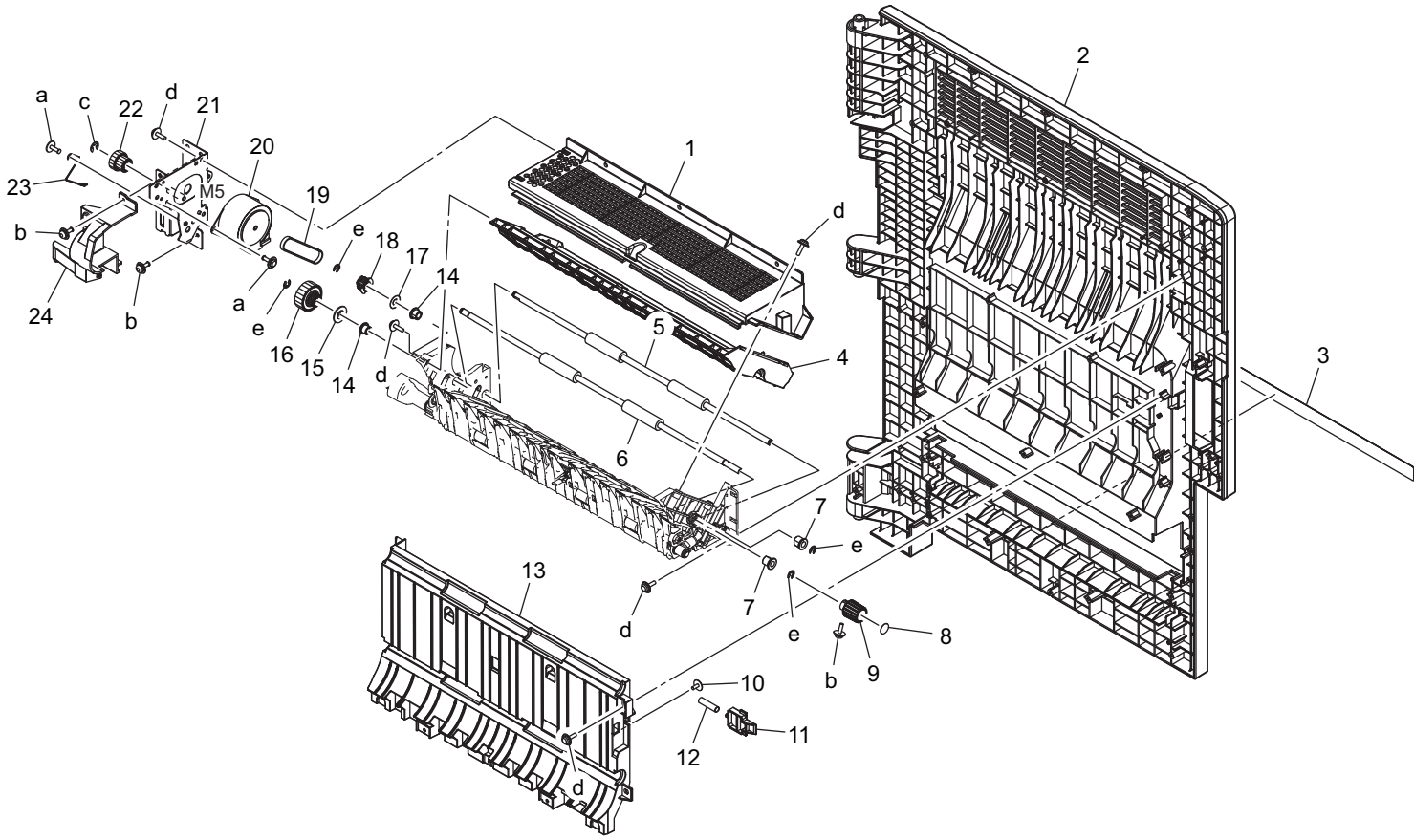

Page	Key	Parts No.	Description	Service Manual	Destinations	Class	Quantity
33	1	A161810701	Cover /Upper			D	1
33	2	A5C1810100	Guide Door /Right			C	1
33	3	A161815100	Cover Door			C	1
33	4	A5C1812200	Guide Plate			D	1
33	5	A161814601	Roller /C			C	1
33	6	A161813701	Roller /B			C	1
33	7	A02E815200	BUSHING			C	2
33	8	A161946100	Label M5			C	1
33	9	A161814700	Knob /A			C	1
33	10	4163529301	SCREW			C	1
33	11	A5C1815700	Open/close Claw			C	1
33	12	A161815800	Swing Spring			C	1
33	13	A5C1810200	Guide Plate /1			D	1
33	14	A161813300	Bushing /A			C	2
33	15	A161813801	Collar /A			C	1
33	16	A5C1819700	Gear 22/29T			C	1
33	17	A161816400	Spacer /A			C	1
33	18	A0ED811700	Pulley 22T			C	1
33	19	A161819000	Drive Belt 156L			C	1
33	20	A0EDM10200	Stepping motor	ADU transport motor (M5)		C	1
33	21	A161F81103	Caulking(Panel Rear)			D	1
33	22	A5C1819600	Gear 16/26T			C	1
33	23	A5C1814300	Contact /B			D	1
33	24	A161814901	Cover /B			D	1
33	a	V137030803	screw			V	
33	b	V116030803	Screw			V	

33	c	V217050001	E ring			V	
33	d	V153030803	Screw			V	
33	e	V217040001	E Ring			V	

1.23.2 P34

P 34

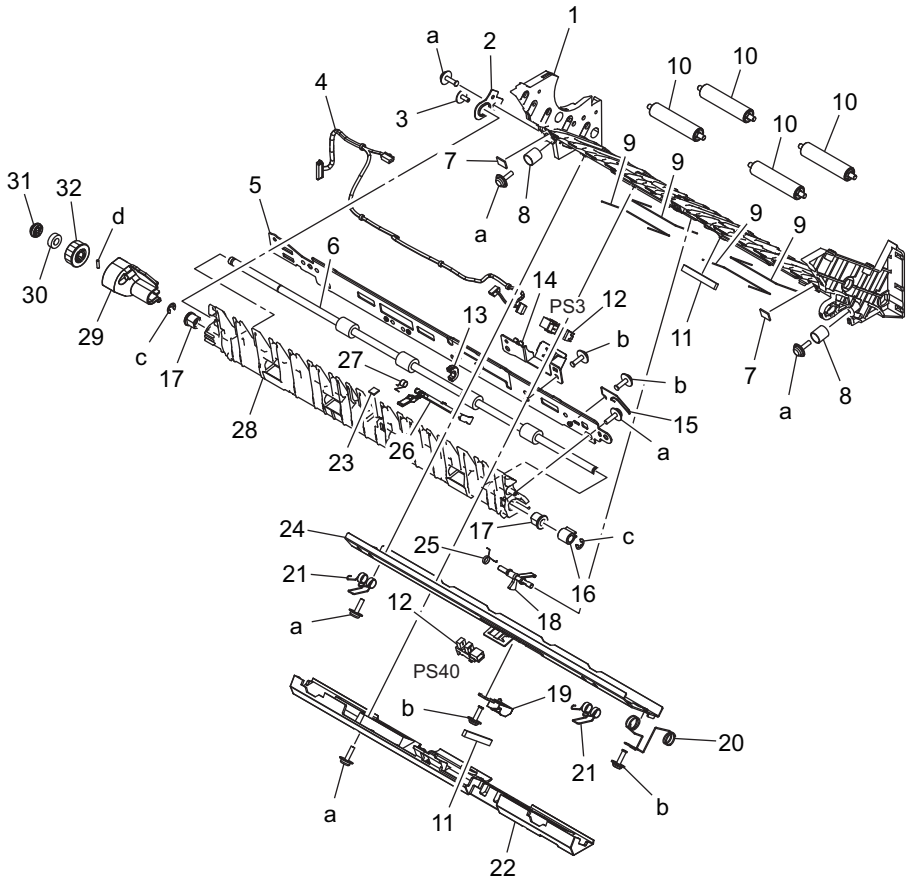

Page	Key	Parts No.	Description	Service Manual	Destinations	Class	Quantity
34	1	A5C1810401	Guide Plate			D	1
34	2	A161814401	Mounting Plate /3			D	1
34	3	4163529301	SCREW			C	1
34	4	A161N12100	Conveyance Drive harness /Upper			D	1
34	5	A161810801	Mounting Plate /2			D	1
34	6	A161810600	Roller /1			C	1
34	7	A161825300	Cushion /A			D	2
34	8	A161813600	Pressing Spring /A			C	2
34	9	A0ED815100	Holding Part			D	4
34	10	A161825700	Idler Roller /A			D	4
34	11	A161825800	Cushion /B			D	2
34	12	A108M50100	Photointerrupter	ADU paper passage sensor/1 (PS40)		B	2
34	13	A161819500	Bushing /C			C	1
34	14	A161825100	Mounting Plate /4			D	1
34	15	A161819400	Contact /C			D	1
34	16	A161814500	Bushing /B			C	1
34	17	A02E815200	BUSHING			C	2
34	18	A161813200	Actuator			C	1
34	19	A161825400	Wiring Part			D	1
34	20	A5C1814200	Contact /A			D	1
34	21	A161813400	Torsion Coil spring			D	2
34	22	A5C1813900	Cover /A			D	1

34	23	A161826000	Cushion /B			D	1
34	24	A5C1810900	Mounting Plate /1			D	1
34	25	A161712800	Spring /D			D	1
34	26	A161813001	Actuator			C	1
34	27	A161813100	Torsion Coil spring			C	1
34	28	A161810503	Guide Plate /4			D	1
34	29	A161825500	Cover /D			D	1
34	30	A5C1825000	Bushing			C	1
34	31	A161825000	Bushing			C	1
34	32	A161819200	Gear 18T			C	1
34	a	V153030803	Screw			V	
34	b	V137030803	screw			V	
34	c	V217040001	E Ring			V	
34	d	V237200850	Pin			V	

1.24 FUSING SECTION

1.24.1 P35

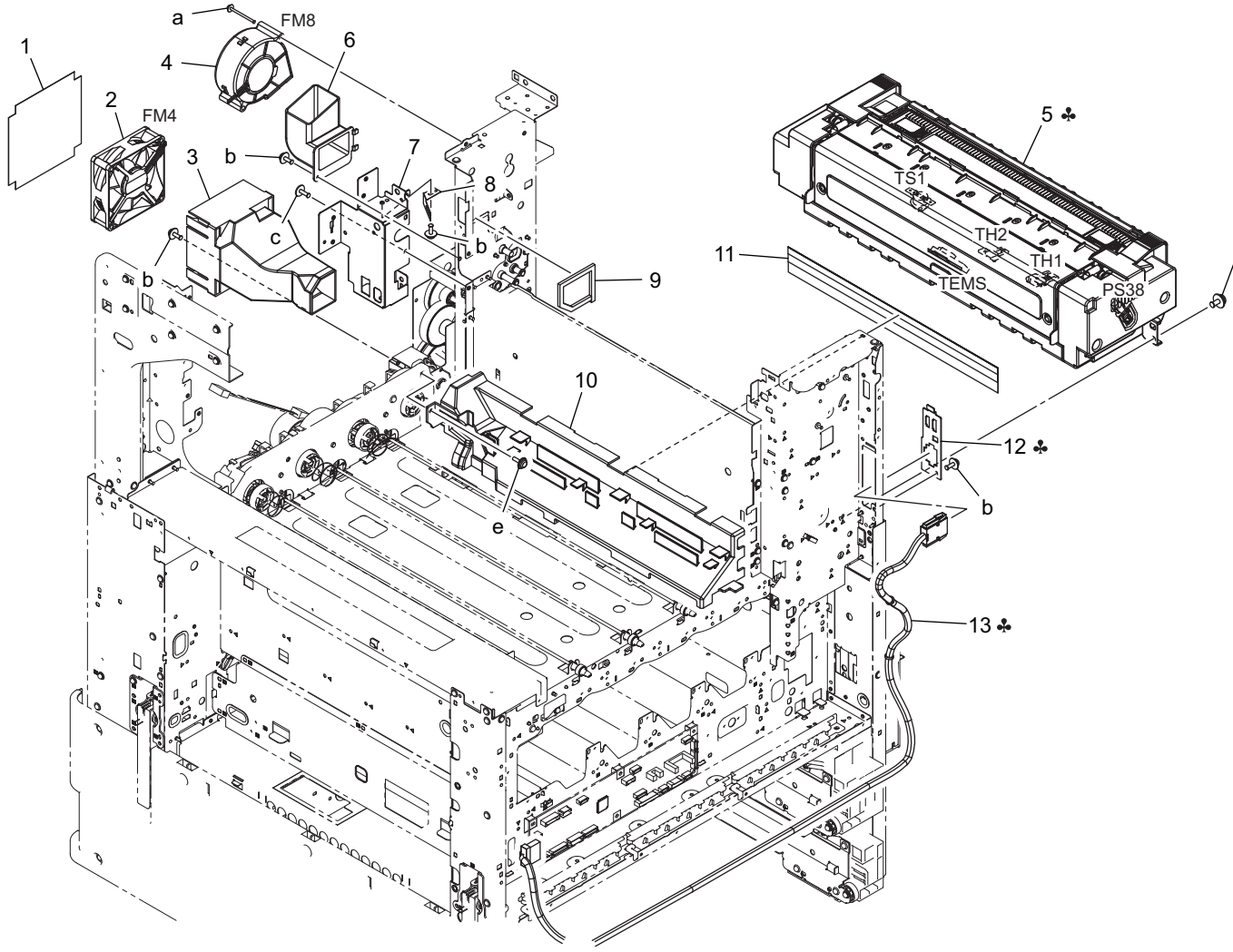

Page	Key	Parts No.	Description	Service Manual	Destinations	Class	Quantity
35	1	A0ED146900	Filter			C	1
35	2	4139M10000	FAN MOTOR	Toner bottle cooling fan (FM4)		B	1
35	3	A161140500	Duct			D	1
35	4	9313110033	FAN MOTOR			C	1
35	5	A161R71744	Fusing Unit 100V		A,A1	A	1
35	5	A161R71844	Fusing Unit 120V		B,G2	A	1
35	5	A61FR71011	Fusing Unit (220-240V)		C,D1,D3,E,F2,G1,I,K	B	1
35	6	A161140300	Duct			D	1

35	7	A161121103	Mounting Plate			D	1
35	8	A161122500	Ground Plate			D	1
35	9	A161121401	Seal /Upper			D	1
35	10	A161140400	Duct			D	1
35	11	A161102700	Seal			D	1
35	12	A161137202	Mounting Plate		A,A1,B,G2	D	1
35	12	A61F137200	Mounting Plate		C,D1,D3,E,F2,G1,I,K	D	1
35	13	A161N10602	Heater Relay harness /1		A,A1	D	1
35	13	A61FN10600	Heater Relay harness		B,G2	D	1
35	13	A61FN11000	Heater Relay harness		C,D1,D3,E,F2,G1,I,K	D	1
35	a	V116033503	Screw			V	
35	b	V116030803	Screw			V	
35	c	V137030803	screw			V	
35	d	V116041003	Screw			V	
35	e	V153030803	Screw			V	

1.25 PAPER EXIT SECTION

1.25.1 P36

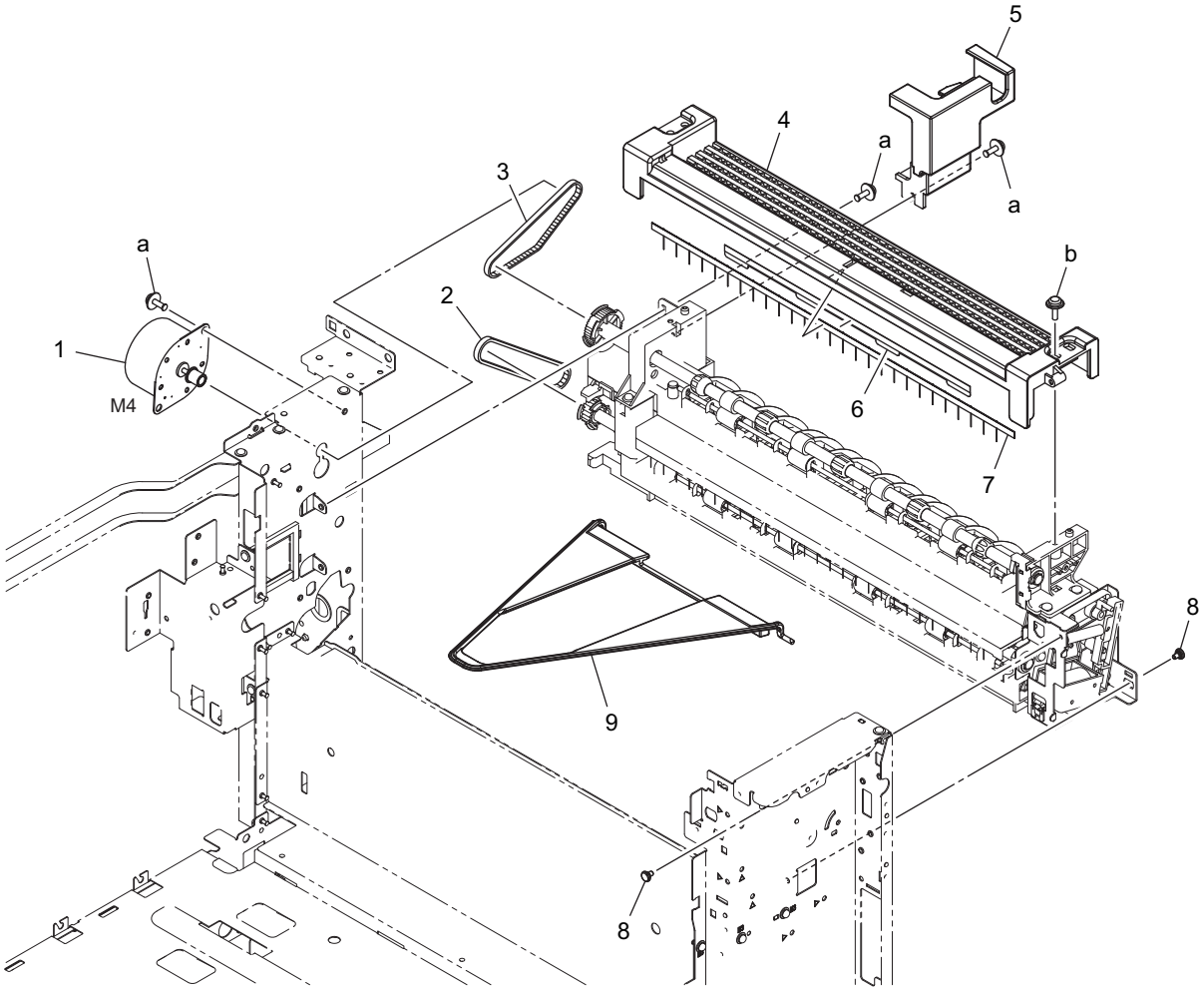

Page	Key	Parts No.	Description	Service Manual	Destinations	Class	Quantity
36	1	A0EDM10300	Stepping motor	Reverse motor (M4)		C	1
36	2	A161891401	Timing belt 231L			D	1
36	3	4640392001	BELT			C	1
36	4	A161895300	Paper exit Cover			D	1
36	5	A161162302	Cover			D	1
36	6	A161894100	Sheet			D	1
36	7	A161894000	Neutralizing Brush			C	1

36	8	A0P0742300	Shoulder screw			C	2
36	9	A161897200	Guide Part			C	1
36	a	V116030803	Screw			V	
36	b	V153030803	Screw			V	

1.25.2 P37

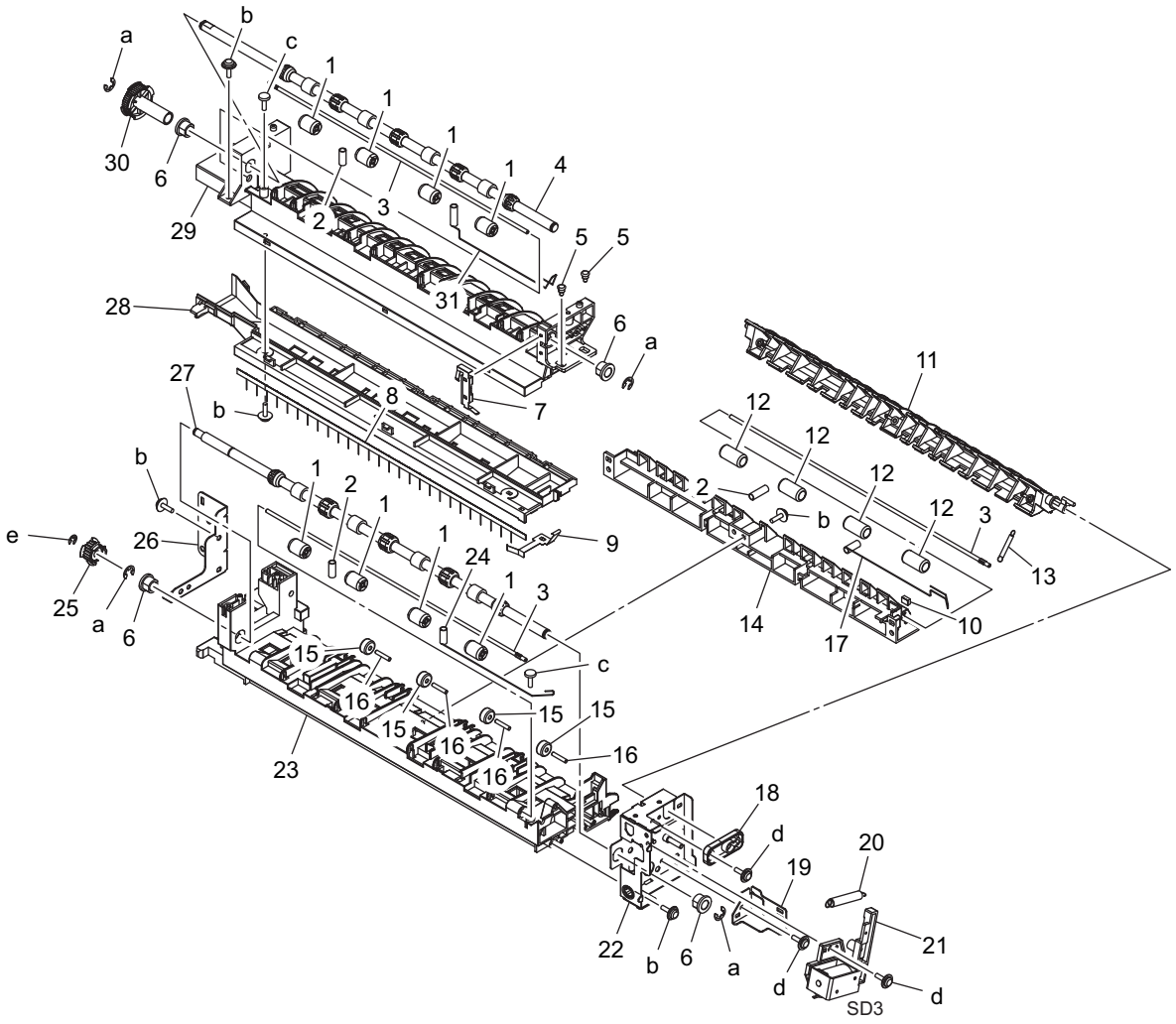

Page	Key	Parts No.	Description	Service Manual	Destinations	Class	Quantity
37	1	4004590301	ROLL			C	8
37	2	A161892400	Spring			C	3
37	3	4025598401	SHAFT			D	3
37	4	A161895400	Roller			C	1
37	5	1164202801	SHOULDER SCREW			D	2
37	6	A0ED891100	Bushing			D	4
37	7	A161895502	Ground Contact /Upper			D	1
37	8	A161894000	Neutralizing Brush			C	1
37	9	A161895600	Ground Contact /Lower			D	1
37	10	A161893600	Cushion			D	1
37	11	A161890401	Guide Lever			D	1
37	12	A0P0901100	Roll			C	4
37	13	A161892100	Spring			C	1
37	14	A161890203	Guide Part /Lower			D	1
37	15	A0ED897700	Collar			C	4
37	16	4036254901	PIN			D	4
37	17	A161900300	Ground Spring			C	1
37	18	A161891000	Bushing			D	1
37	19	A161892300	Mounting Plate			D	1

37	20	A161892000	Spring			D	1
37	21	A161R72600	Solenoid Assy	Gate switch solenoid (SD3)		C	1
37	22	A161F89002	Caulking(Mounting Plate)			D	1
37	23	A161890102	Paper exit Main body			D	1
37	24	A161900100	Ground Spring			C	1
37	25	A161891301	Pulley 18T			D	1
37	26	A161892902	Fixing Part			D	1
37	27	A161890300	Roller			C	1
37	28	A161895212	Paper exit Guide /Lower			D	1
37	29	A161895113	Paper exit Guide /Upper			D	1
37	30	A161895800	Pulley 44T			D	1
37	31	A161900201	Ground Spring			C	1
37	a	V217060001	E Ring			V	
37	b	V153030803	Screw			V	
37	c	V149030803	screw			V	
37	d	V137030803	screw			V	
37	e	V217040001	E Ring			V	

1.26 MAIN DRIVE/ PAPER FEED DRIVE SECTION

1.26.1 P38

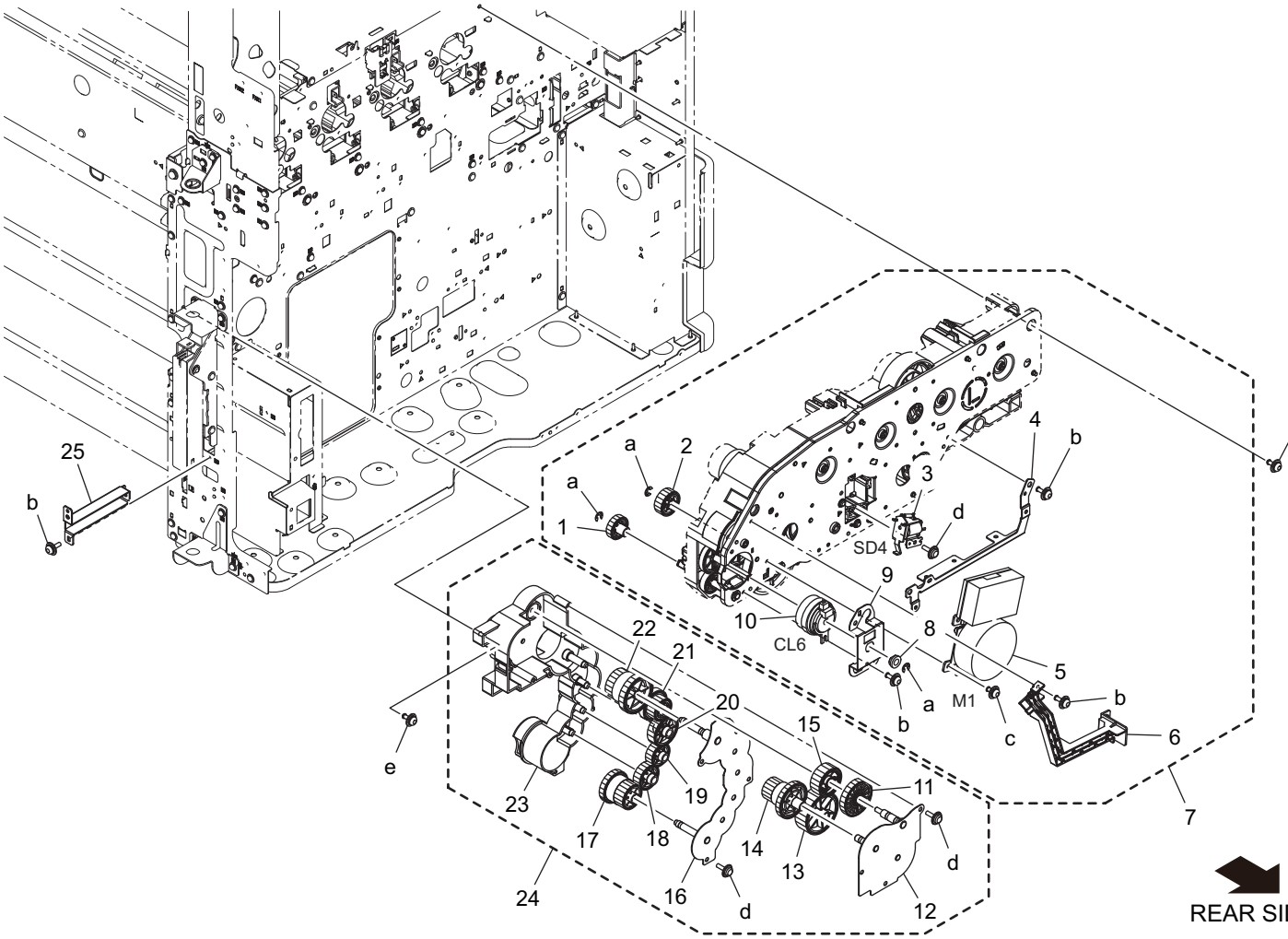

Page	Key	Parts No.	Description	Service Manual	Destinations	Class	Quantity
38	1	A161257800	Gear 20T			C	1
38	2	A161254000	Gear 22T			C	1
38	3	A161M20300	Flapper solenoid			C	1
38	4	A161216101	Mounting Plate			D	1
38	5	A161M10001	brushless Motor /40	Transport motor (M1)		I	1

38	6	A161134701	Guide			D	1
38	7	A61FR70200	Main Drive Assy			C	1
38	8	A161210200	Bushing			D	1
38	9	A161253900	Hold Plate			D	1
38	10	A161M20201	Clutch	ADU transport clutch (CL6)		C	1
38	11	A161253500	Gear 53T			D	1
38	12	A161F21100	Caulking(Hold Plate Paper Feed DriveL)			D	1
38	13	A161253100	Gear 38T			D	1
38	14	A161259800	Gear 19/32T			D	1
38	15	A161253600	Gear 26T			D	1
38	16	A161F21200	Caulking(Hold Plate Paper Feed Drive2)			D	1
38	17	A161220700	Gear 28/28T			D	1
38	18	A161220600	Gear 28T			D	1
38	19	A161220500	Gear 26T			D	1
38	20	A161220400	Gear 35T			D	1
38	21	A161220200	Gear 25/27T			D	1
38	22	A161220100	Gear 26/34T			D	1
38	23	A161221001	Holder			D	1
38	24	A161R70511	Paper Feed Drive Assy			S	1
38	25	A161105500	Reinforce Plate			D	1
38	a	V217040001	E Ring			V	
38	b	V116030803	Screw			V	
38	c	V116030504	Screw			V	
38	d	V153030803	Screw			V	
38	e	V125030818	Screw			V	

1.27 TONER BOTTLE DRIVE SECTION

1.27.1 P39

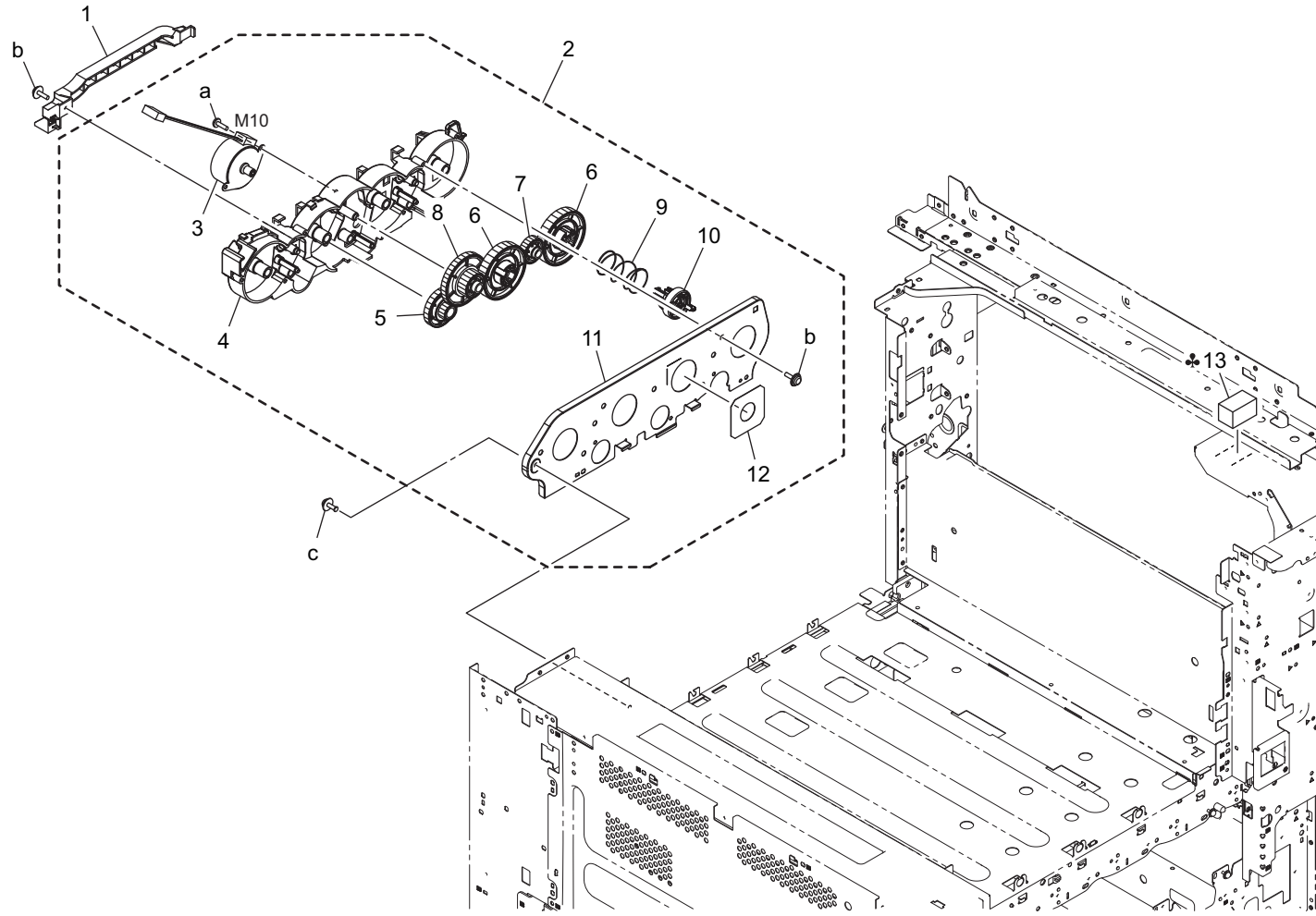

Page	Key	Parts No.	Description	Service Manual	Destinations	Class	Quantity
39	1	A161241600	Guide			D	1
39	2	A61FR71611	Toner Bottle Drive Assy			S	1
39	3	A161M10300	Stepping motor			C	1
39	4	A161240100	Drive Holder			D	1
39	5	A161240300	Gear 18/91T			D	1
39	6	A161240600	Gear 65T			D	2
39	7	A161240500	Gear 29T			D	1
39	8	A161240400	Gear 29/62T			D	1
39	9	4038541202	PRESSURE SPRING			C	1
39	10	A161240700	Joint			C	1
39	11	A161241500	Mounting Plate			D	1
39	12	A61F241800	Seal			D	1
39	13	A61FM90500	Gasket		C,D1,D3,E,F2,G1,I,K	D	1
39	a	V145030803	screw			V	
39	b	V153030803	Screw			V	
39	c	V116030803	Screw			V	

1.28 FUSING DRIVE SECTION

1.28.1 P40

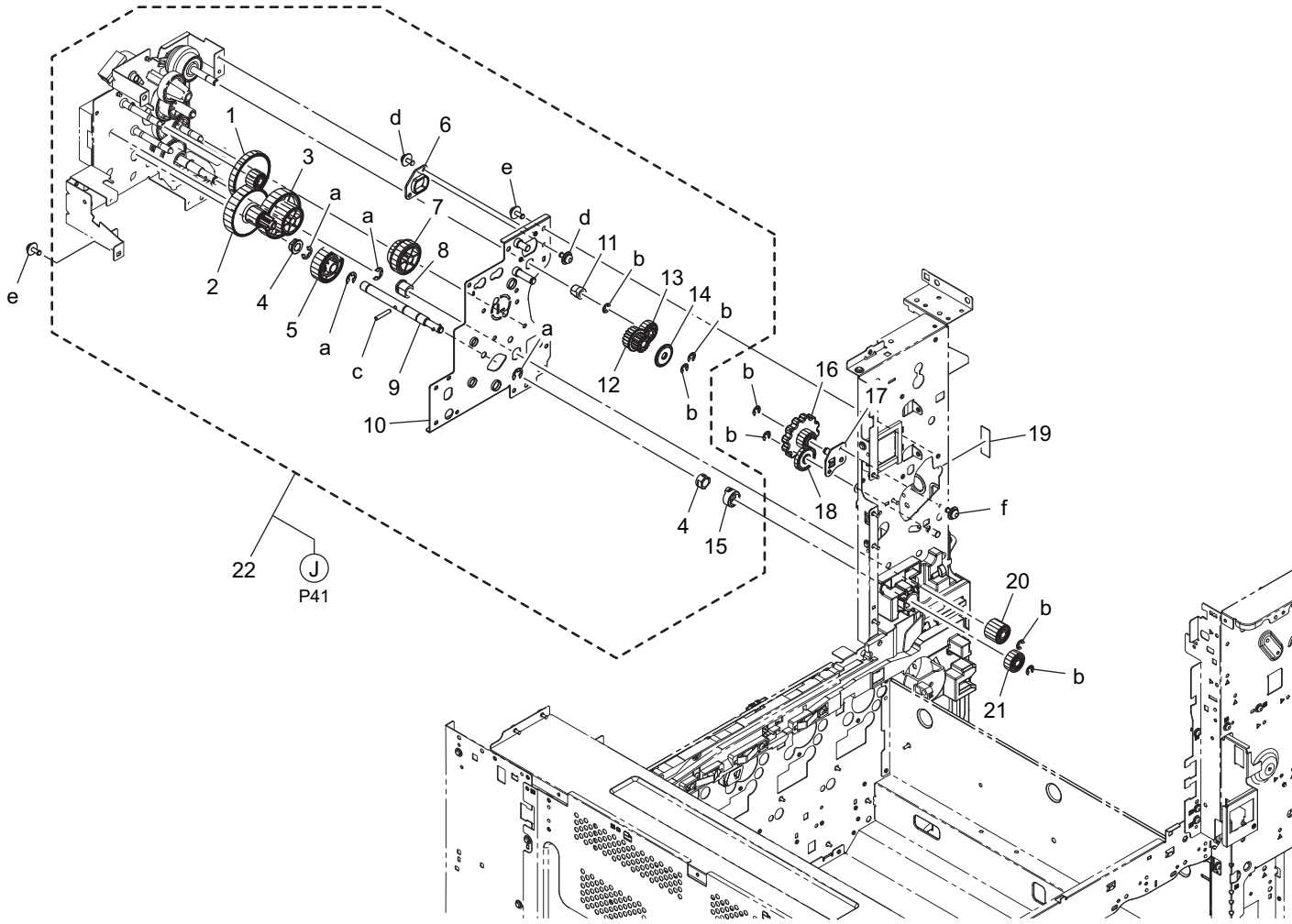

Page	Key	Parts No.	Description	Service Manual	Destinations	Class	Quantity
40	1	A161254200	Gear 18/115T			D	1
40	2	A161254300	Gear 18/57T			D	1
40	3	A161254400	Gear 33/55T			D	1
40	4	A03U812800	Slide Shaft Holder			B	2
40	5	A161254500	Gear 38T			D	1
40	6	A161232200	Bushing			D	1
40	7	A161228800	Gear 22/23T			D	1
40	8	A161702200	Bushing			C	1
40	9	A161256300	Shaft			D	1
40	10	A161F25102	Caulking(Mounting Plate Fuser Drive2L)			D	1
40	11	A161232300	Bushing			D	1
40	12	A5C1231300	Gear 18/18T			C	1
40	13	A161230700	Gear 18T			C	1
40	14	A2XK224100	Collar			D	1
40	15	A161232401	Collar			D	1
40	16	A161122002	Gear 12T			D	1
40	17	A161F10901	Caulking			D	1
40	18	A161121900	Gear 17T			D	1
40	19	A161941100	Label M4			D	1
40	20	A161228701	Gear 16T			C	1
40	21	A161254600	Gear			C	1
40	22	A61FR71500	Fusing Drive Assy			S	1

40	a	V217060001	E Ring			V	
40	b	V217040001	E Ring			V	
40	c	V237301850	Pin			V	
40	d	V116030603	Screw			V	
40	e	V125030818	Screw			V	
40	f	V116030803	Screw			V	

1.28.2 P41

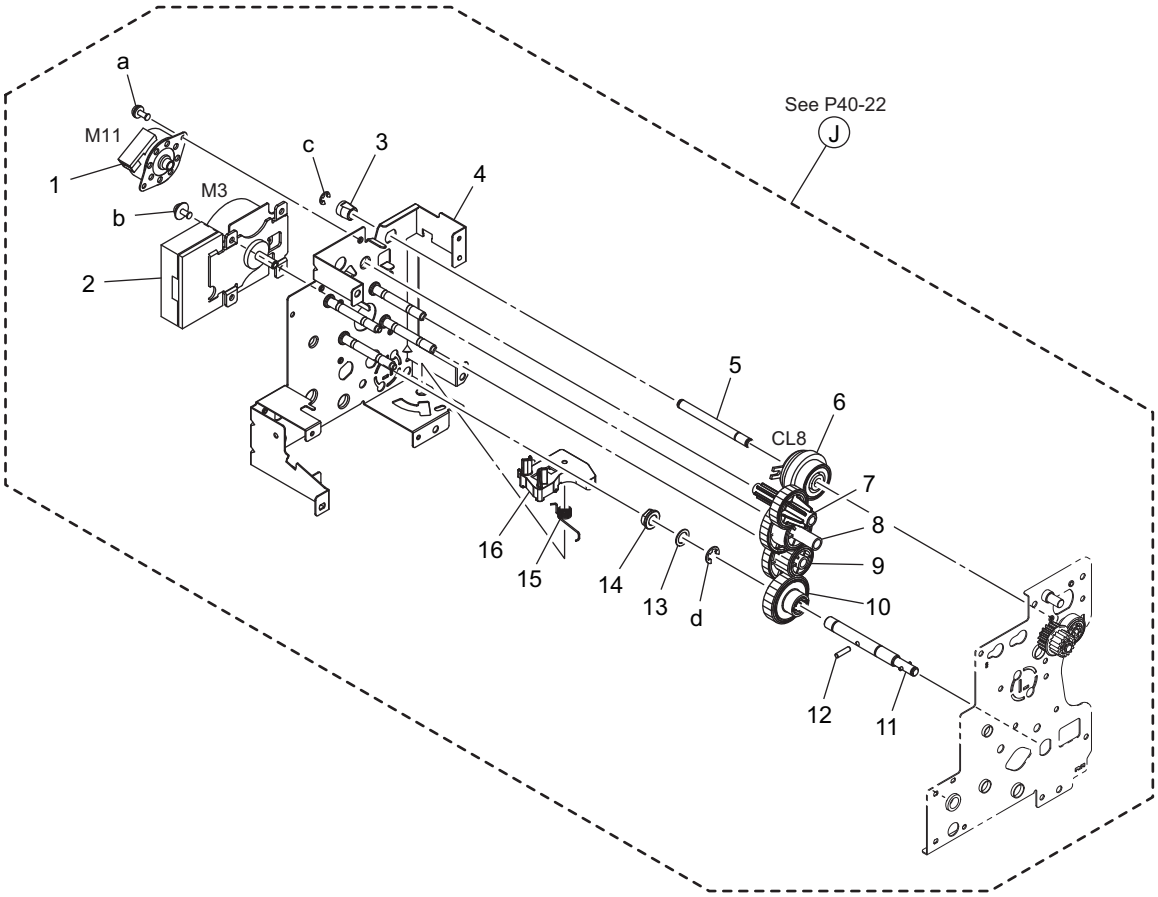

Page	Key	Parts No.	Description	Service Manual	Destinations	Class	Quantity
41	1	A02EM10400	Stepping motor	Fusing pressure motor (M11)		C	1
41	2	A161M10200	brushless Motor /20	Fusing motor (M3)		I	1
41	3	A161232300	Bushing			D	1
41	4	A161F25013	Caulking(Mounting Plate Fuser DriveL)			D	1
41	5	A161231800	Shaft			D	1
41	6	A161M20400	Clutch	Paper exit clutch (CL8)		C	1
41	7	A161230600	Gear 27T			D	1
41	8	A161230500	Gear 24/70T			D	1
41	9	A161228000	Gear 22/70T			D	1
41	10	A161228100	Gear 33T			D	1
41	11	A161228312	Shaft			D	1
41	12	56AA17471	PIN B 3X12			C	1
41	13	A1RF505400	Slide Spacer			D	1
41	14	A03U812800	Slide Shaft Holder			B	1
41	15	A161258501	Torsion Coil spring			D	1
41	16	A161228600	Lever			D	1

41	a	V115030603	Screw			V	
41	b	V116030603	Screw			V	
41	c	V217040001	E Ring			V	
41	d	V217060001	E Ring			V	

1.29 OZONE DUCT SECTION

1.29.1 P42

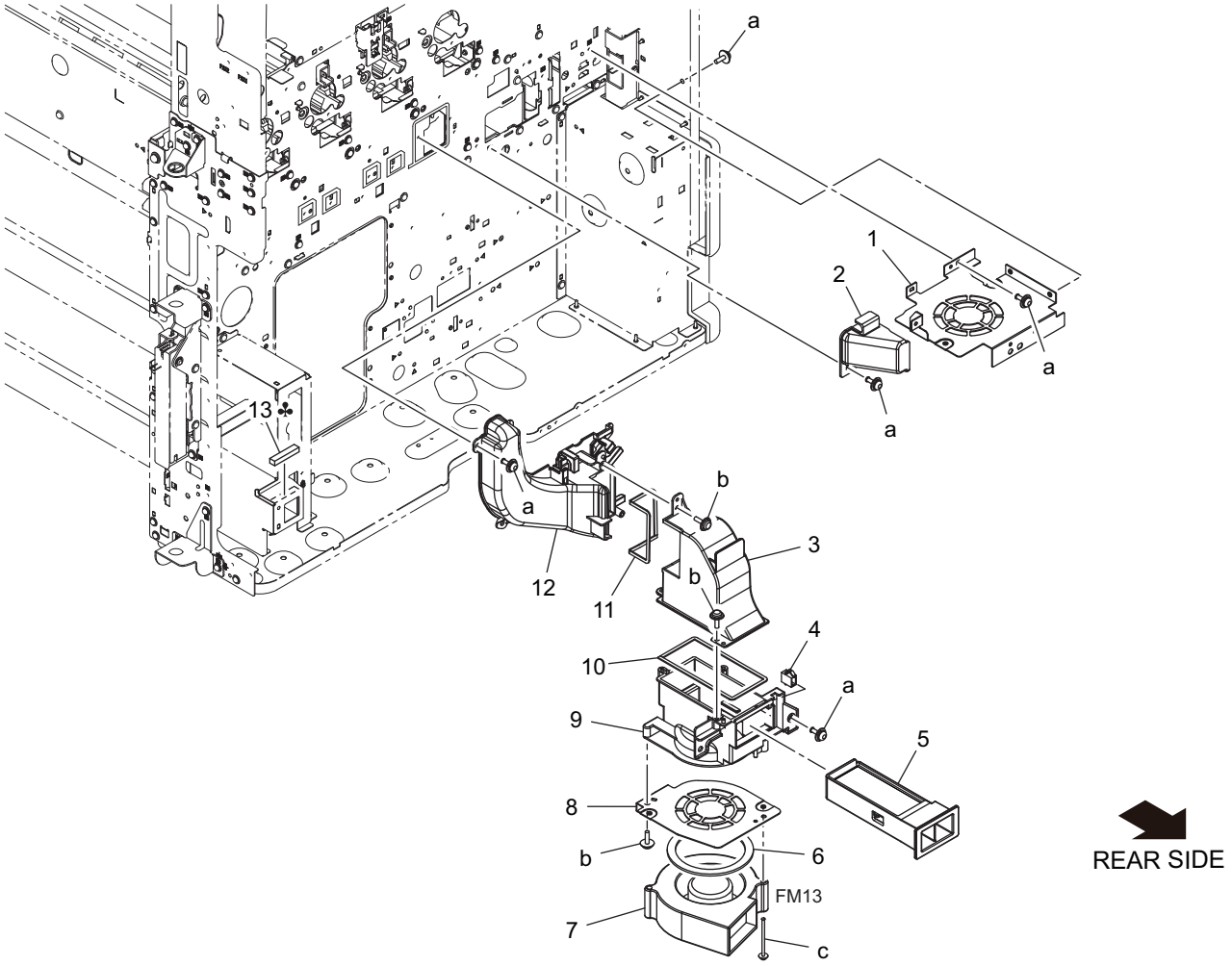

Page	Key	Parts No.	Description	Service Manual	Destinations	Class	Quantity
42	1	A5C1142000	Mounting Plate			D	1
42	2	A161141500	Duct /2			D	1
42	3	A161141902	Duct /2			D	1
42	4	V651010002	connector			D	1
42	5	A161R72700	Ozone Filter Assy			A	1
42	6	A02E117300	Seal			C	1
42	7	9313100072	FAN MOTOR			C	1
42	8	A161142200	Mounting Plate			D	1
42	9	A161147001	Duct /3			D	1
42	10	A161145300	Seal /2			D	1
42	11	A161145201	Seal /1			D	1
42	12	A5C1141800	Duct /1			D	1
42	13	A61FM90A00	Gasket		C,D1,D3,E,F2,G1,I,K	D	1
42	a	V116030803	Screw			V	
42	b	V153030803	Screw			V	
42	c	V116034003	Screw			V	

1.30 HIGH VOLTAGE SECTION

1.30.1 P43

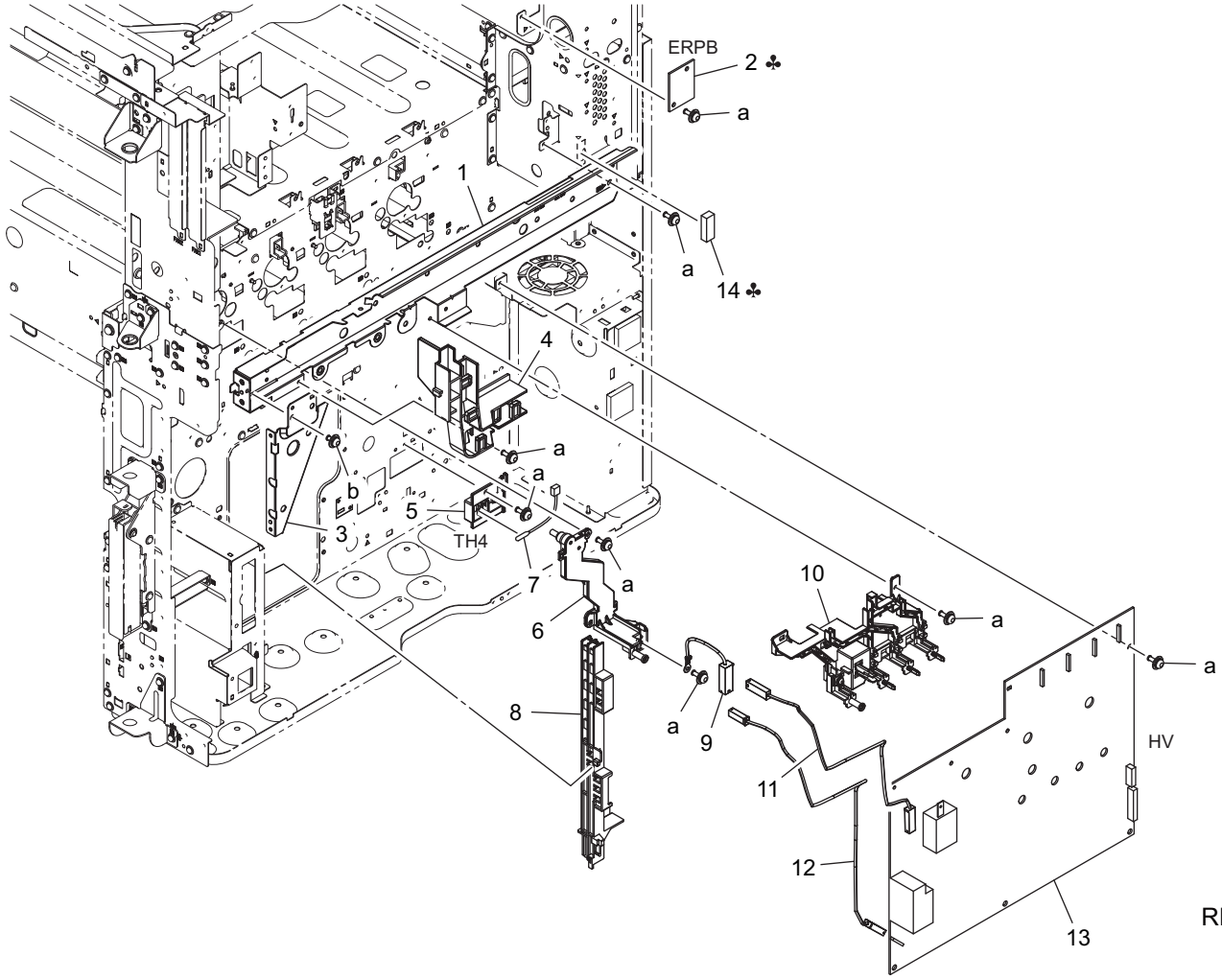

Page	Key	Parts No.	Description	Service Manual	Destinations	Class	Quantity
43	1	A161132504	Mounting Plate			D	1
43	2	A161H00C02	PWB Assembly(PWB-DC ASSY)	ERP board (ERPB)	A,A1	C	1
43	3	A161132800	Reinforce Plate			D	1
43	4	A161132101	Guide			D	1
43	5	A161137701	Holder			D	1
43	6	A161R70211	HV Contact Assy			D	1
43	7	A0P0M50300	Thermistor	Paper temperature sensor (TH4)		C	1
43	8	A5C1134800	Guide			D	1
43	9	A161N12P01	Charging Wiring /K			D	1
43	10	A61FR71200	DV Contact Assy			D	1
43	11	A161N11300	Transfer Wiring /2			D	1
43	12	A161N11K00	Neutralizing Wiring			D	1
43	13	A61FM40600	High voltage unit	High voltage unit (HV)		I	1
43	14	A61FM90800	Gasket		C,D1,D3,E,F2,G1,I,K	D	1
43	a	V116030803	Screw			V	
43	b	V116030603	Screw			V	

1.31 MAIN POWER SUPPLY SECTION

1.31.1 P44

P 4

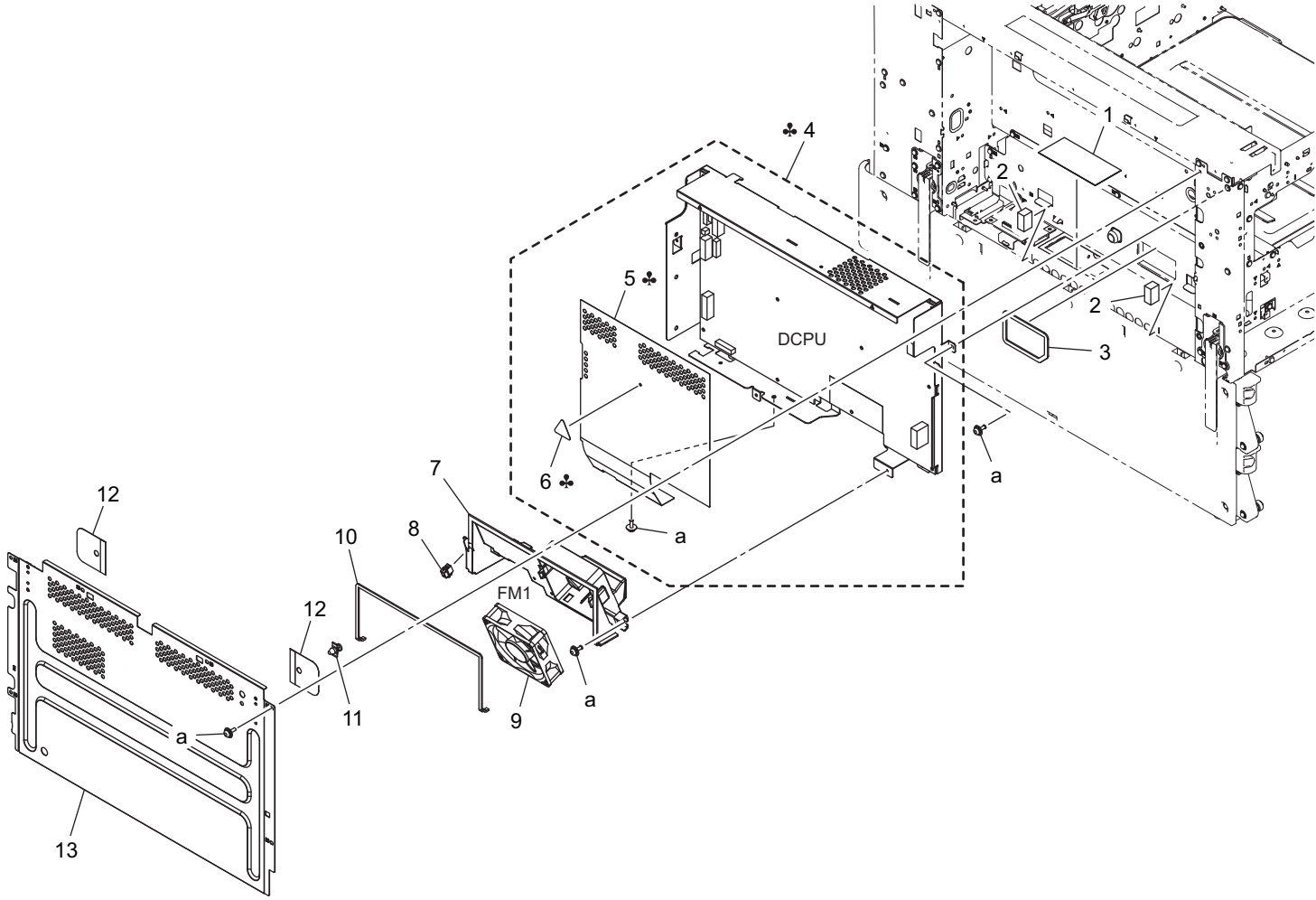

Page	Key	Parts No.	Description	Service Manual	Destinations	Class	Quantity
44	1	A161145000	Filter			C	1
44	2	A161144500	Seal /3			C	2
44	3	A161143601	Seal /3			D	1
44	4	A5C1R70500	Power supply Assy /100V	DC power supply (DCPU)	A,A1	I	1
44	4	A61FR70000	Power supply Assy (100-127V)	DC power supply (DCPU)	B,G2	I	1
44	4	A61FR71900	Power supply Assy (220-240V)	DC power supply (DCPU)	C,D1,D3,E,F2,G1,I,K	I	1
44	5	A5C1130200	Sheet		A,A1	D	1
44	6	A0CR953400	Label		A,A1	C	1
44	7	A161140800	Cooling Duct			D	1
44	8	V651010002	connector			D	1
44	9	4139M10000	FAN MOTOR			B	1
44	10	A161143400	Seal /1			D	1
44	11	V502010026	SUPPORT			D	1
44	12	A61F100600	Sheet			D	2
44	13	A161100603	Cover			D	1
44	a	V116030803	Screw		A,A1	V	

1.32 ELECTRICAL COMPONENTS

1.32.1 P45

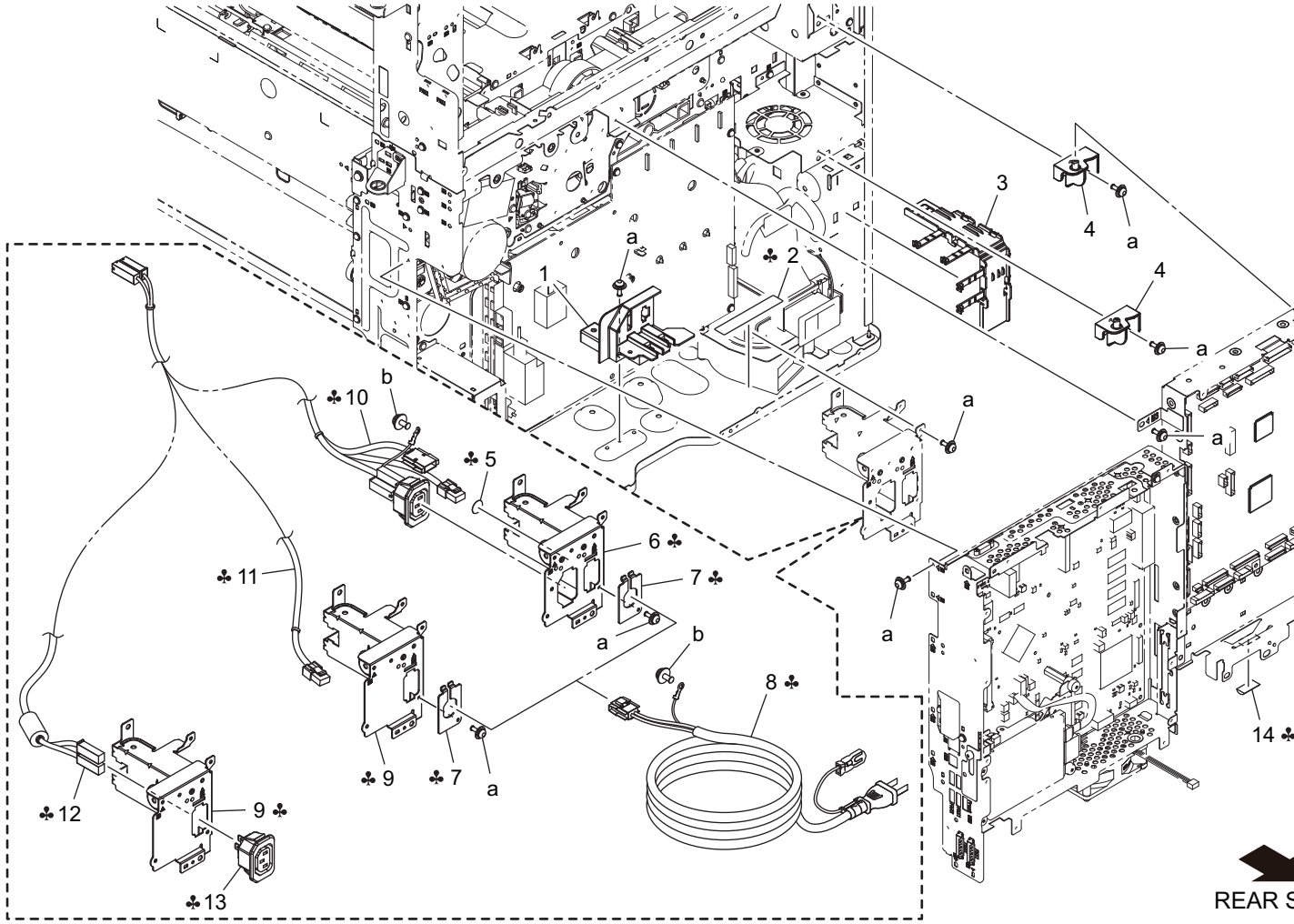

Page	Key	Parts No.	Description	Service Manual	Destinations	Class	Quantity
45	1	A161131401	Holder			D	1
45	2	A61F130700	Tape		C,D1,D3,E,F2,G1,I,K	D	1
45	3	A5C1137800	Holder			D	1
45	4	A5C1130800	Support Shaft			D	2
45	5	9J06730101	LABEL		A,A1	D	1
45	6	A161130502	Mounting Plate		A,A1	D	1
45	7	A0ED135700	Mounting Plate		A,A1,B,G2	D	1
45	8	A0EDN30002	Power source Cord /100V		A,A1	D	1
45	8	A1UDN30001	Power code /120V		B,G2	C	1
45	9	A161130603	Mounting Plate		B,C,D1,D3,E,F2,G1,G2,I,K	D	1
45	10	A161N10002	AC Wiring /100V		A,A1	D	1
45	11	A161N10102	AC Wiring /120V		B,G2	D	1
45	12	A61FN10200	AC Wiring /230V		C,D1,D3,E,F2,G1,I,K	D	1
45	13	A02EN12513	Power supply Wiring		C,D1,D3,E,F2,G1,I,K	D	1
45	14	A61FM90B00	Gasket		C,D1,D3,E,F2,G1,I,K	D	1
45	a	V116030803	Screw		A,A1,B,G2	V	
45	b	V116040803	Screw			V	

1.32.2 P46

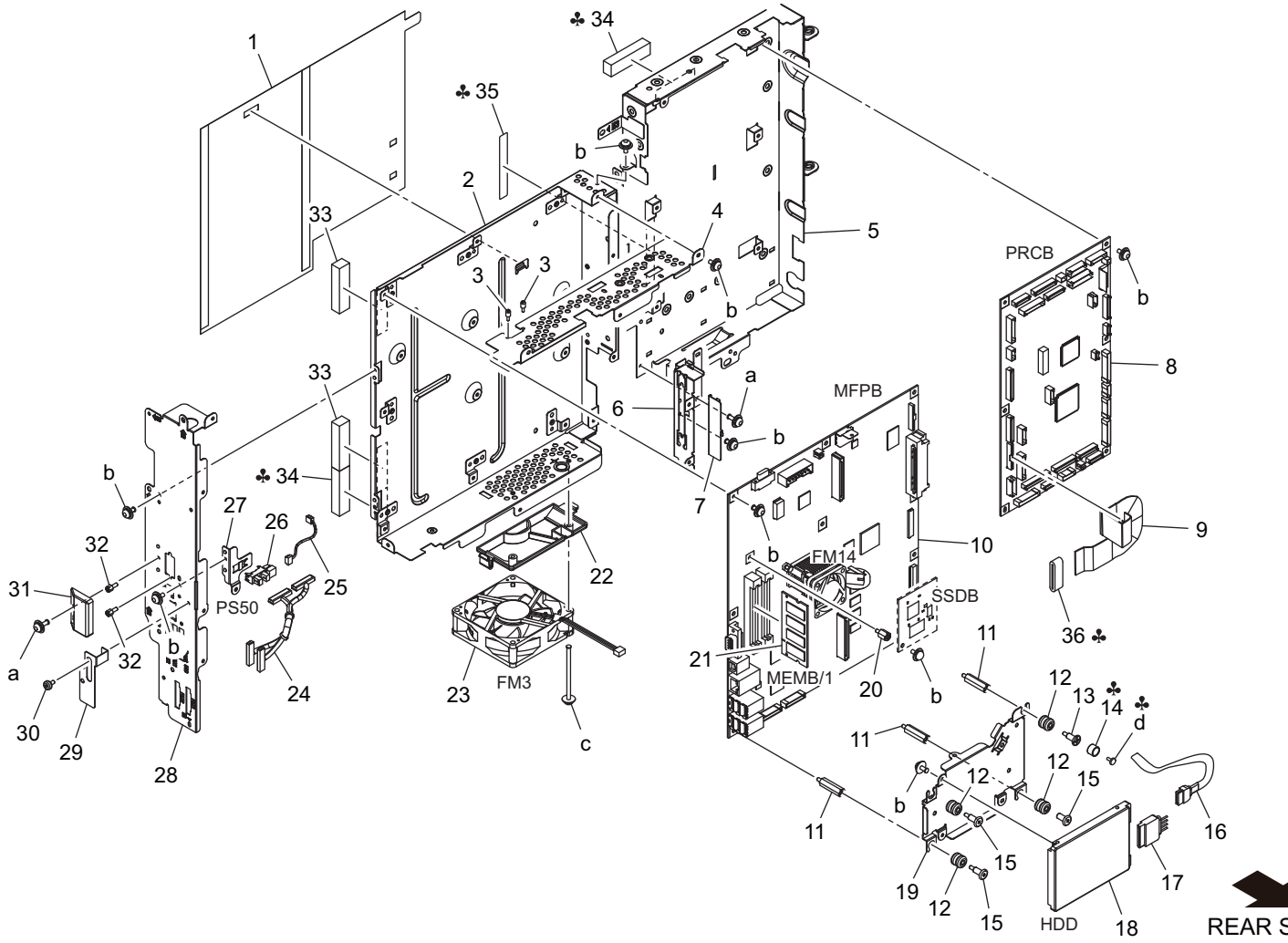

Page	Key	Parts No.	Description	Service Manual	Destinations	Class	Quantity
46	1	A161134500	Sheet			D	1
46	2	A5C1131900	Shield Case			D	1
46	3	A161138601	Shoulder screw			C	2
46	4	A5C1137402	Mounting Plate			D	1
46	5	A5C1131801	Shield Case			D	1
46	6	A5C1138800	Mounting Plate			D	1
46	7	A161137501	Cover			D	1
46	8	A61FH00101	PWM Assembly (PWB-MCL)	Printer control board (PRCB)		I	1
46	9	A5C1N11800	Flatcable			D	1
46	10	A61FH02001	PWB assembly (PWB-MFP)	MFP board (MFPB)		I	1
46	11	A5C1139900	Shoulder screw			D	3
46	12	A0P0144400	Bushing			D	4
46	13	A5C1133800	Shoulder screw			C	1
46	14	A5C1133900	Compressing Coil spring		C,D1,D3,E,F2,G1,I,K	C	1
46	15	A0P0144300	Shoulder screw			D	3
46	16	A0P0N15100	Cable			C	1
46	17	A0P0N15200	Cable			C	1
46	18	A2X0M72C00	HDD	Hard disk (HDD)		I	1
46	19	A161130701	Mounting Plate			D	1
46	20	A161137600	Shoulder screw			D	1
46	21	V865300026	MEMORY MODULES	Memory board/1 (MEMB/1)		C	1
46	22	A161140101	Duct			D	1
46	23	A0EDM10500	Fan motor			C	1

46	24	A161N12602	Control Relay harness			D	1
46	25	A161N11B00	Controller Detection harness			D	1
46	26	A108M50100	Photointerrupter			B	1
46	27	A5C1139400	Mounting Plate			D	1
46	28	A5C1131600	Mounting Plate			D	1
46	29	A161139501	Cover			D	1
46	30	A0P0742300	Shoulder screw			C	1
46	31	A0ED131900	Cover			D	1
46	32	A161137900	Screw			C	2
46	33	A5C1M90000	Gasket			D	2
46	34	A5C1M90000	Gasket		C,D1,D3,E,F2,G1,I,K	D	2
46	35	A61F130800	Seal		C,D1,D3,E,F2,G1,I,K	D	1
46	36	A61FM90100	Ferritecore		C,D1,D3,E,F2,G1,I,K	D	1
46	a	V116030803	Screw			V	
46	b	V116030603	Screw			V	
46	c	V116034003	Screw			V	
46	d	V118030603	screw			V	

1.33 WIRING

1.33.1 P47

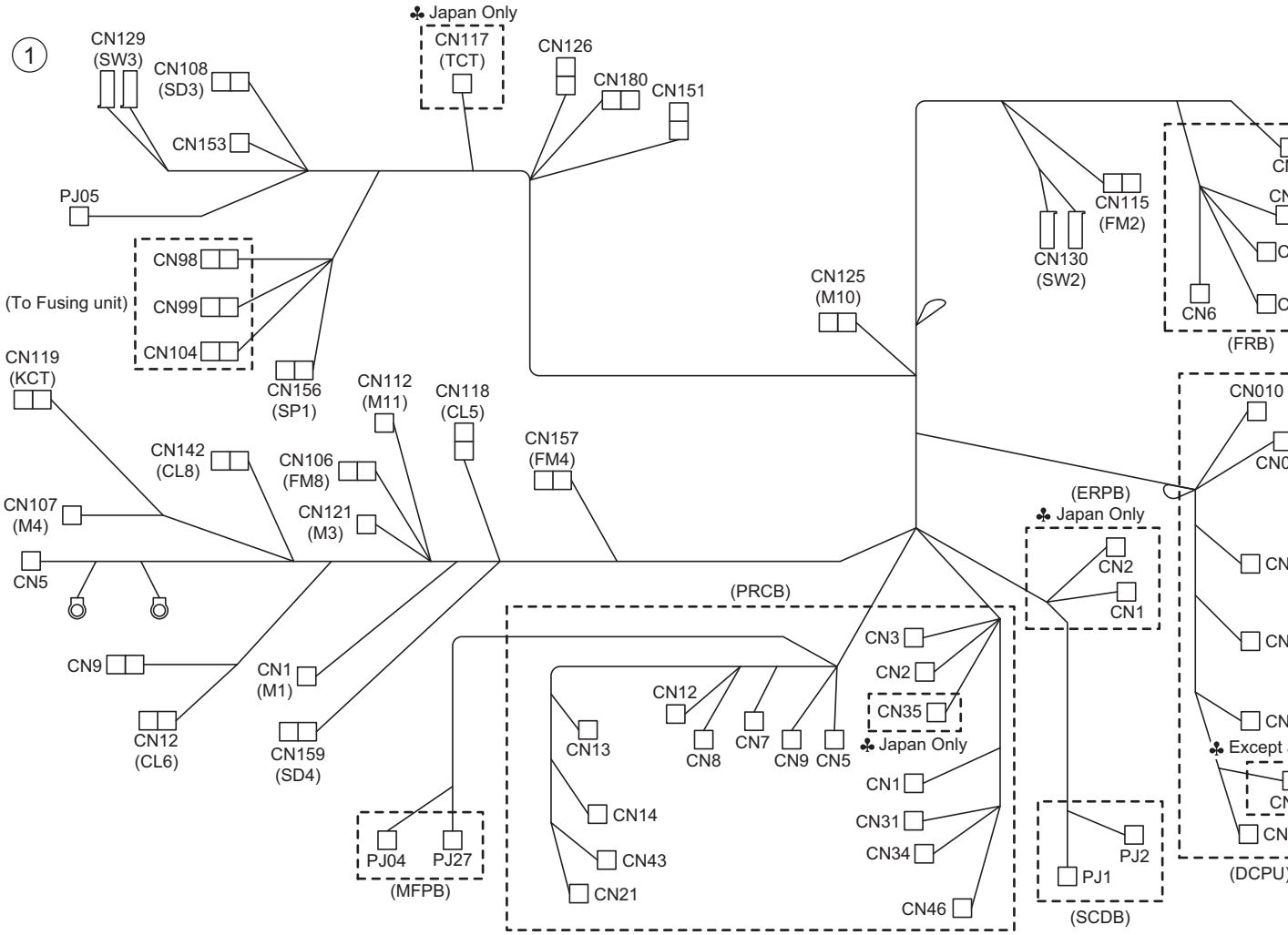

Page	Key	Parts No.	Description	Service Manual	Destinations	Class	Quantity
47	1	A61FN10300	Main body Wiring /Front		A,A1{364e}	D	1
47	1	A61FN10901	Main body Wiring /Front		B,C,D1,D3,E,F2,G1,G2,I,K{364e}	D	1
47	1	A61GN10300	Main body Wiring /Front		A,A1{284e}	D	1

47	1	A61GN10901	Main body Wiring /Front		B,C,D1,D3,E,F2,G1,G2,I,K{284e}	D	1
47	1	A61HN10300	Main body Wiring /Front		A,A1{224e}	D	1
47	1	A61HN10901	Main body Wiring /Front		B,C,D1,D3,E,F2,G1,G2,I,K{224e}	D	1

1.33.2 P48

①

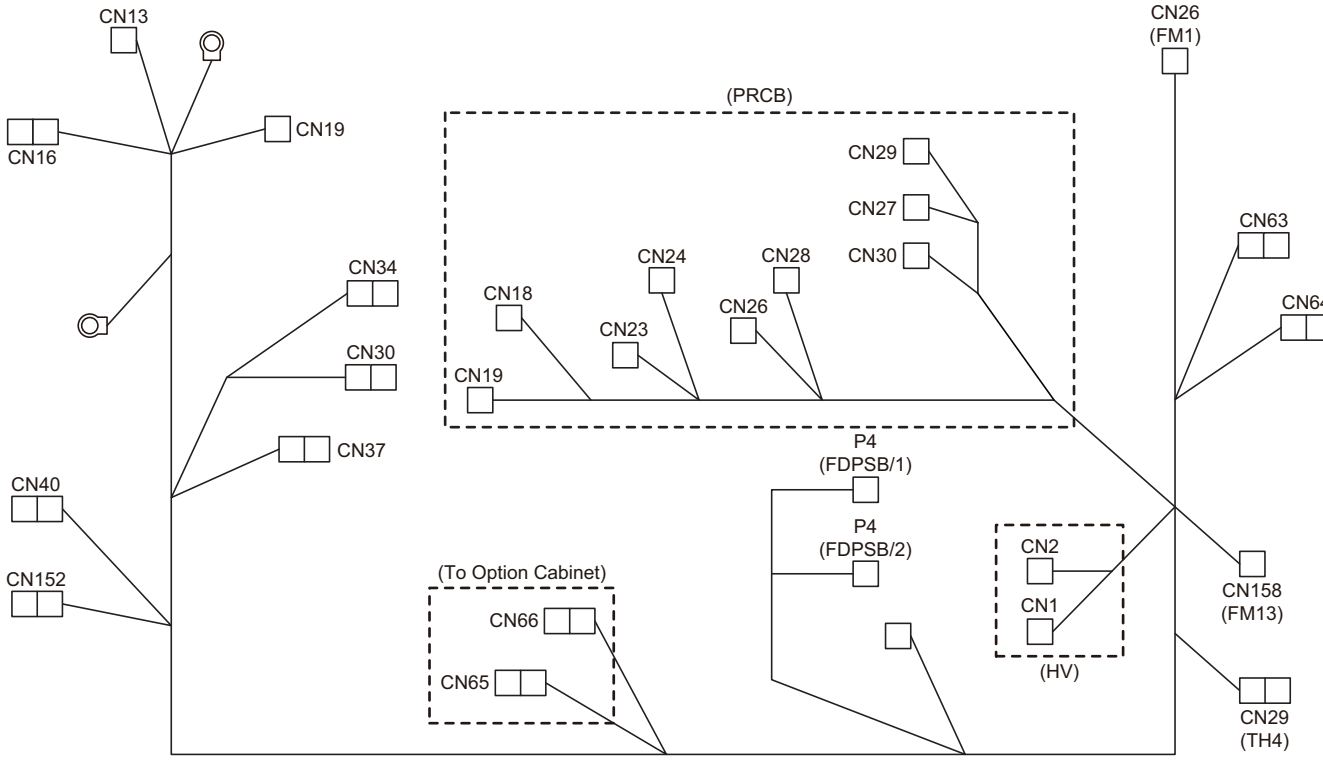

Page	Key	Parts No.	Description	Service Manual	Destinations	Class	Quantity
48	1	A5C1N10A01	Main body Wiring /Rear			D	1

1.34 WIRING ACCESSORIES AND JIGS

1.34.1 P49

1 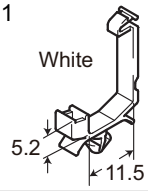	6 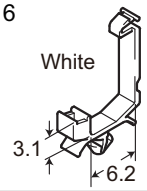	11 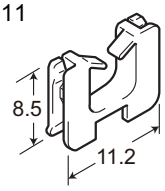	16 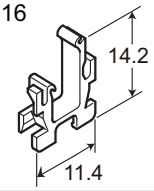	21	26	31	36
2 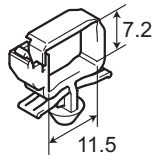	7 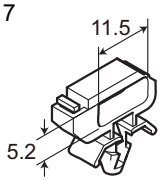	12 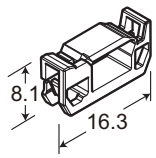	17 ♣ 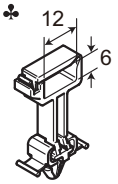	22	27	32	37
3 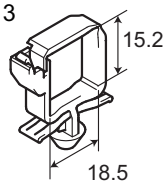	8 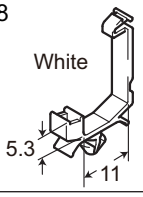	13 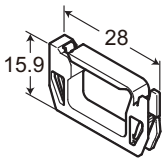	18 ♣ 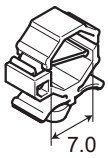	23	28	33	38
4 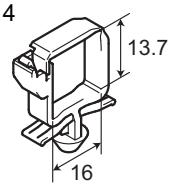	9 ♣ 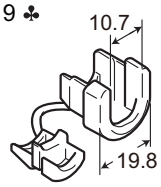	14 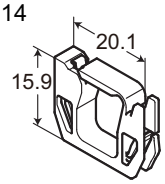	19	24	29	34	39
5 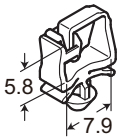	10 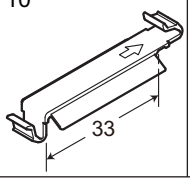	15 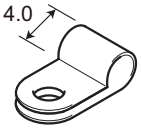	20	25	30	35	40

Page	Key	Parts No.	Description	Service Manual	Destinations	Class	Quantity
49	1	V500010081	Locking Wire Saddle			D	
49	2	V500010082	Locking Wire Saddle			D	
49	3	V500010083	Locking Wire Saddle			D	
49	4	V500010084	Locking Wire Saddle			D	
49	5	V500020098	Mini Locking wire saddle			D	
49	6	V500020099	Mini Locking wire saddle			D	
49	7	V500010052	SADDLE			D	
49	8	V500020100	Mini Locking wire saddle			D	
49	9	V500020052	bushing		A,A1,B,G2	D	
49	10	V500020082	Clamping for FFC			D	
49	11	V570010021	Saddle			D	
49	12	V570010057	Wing Edge Saddle			D	
49	13	V570010059	Wing Edge Saddle			D	
49	14	V570010060	Wing Edge Saddle			D	
49	15	V500020069	Clamp			D	
49	16	V570010050	Locking Edge Saddle			D	
49	17	V500020101	Reuse spacing clamp		B,C,D1,D3,E,F2,G1,G2,I,K	V	
49	18	V500020110	FG Clamp		C,D1,D3,E,F2,G1,I,K	D	

1.35 ACCESSORY PARTS

1.35.1 P50

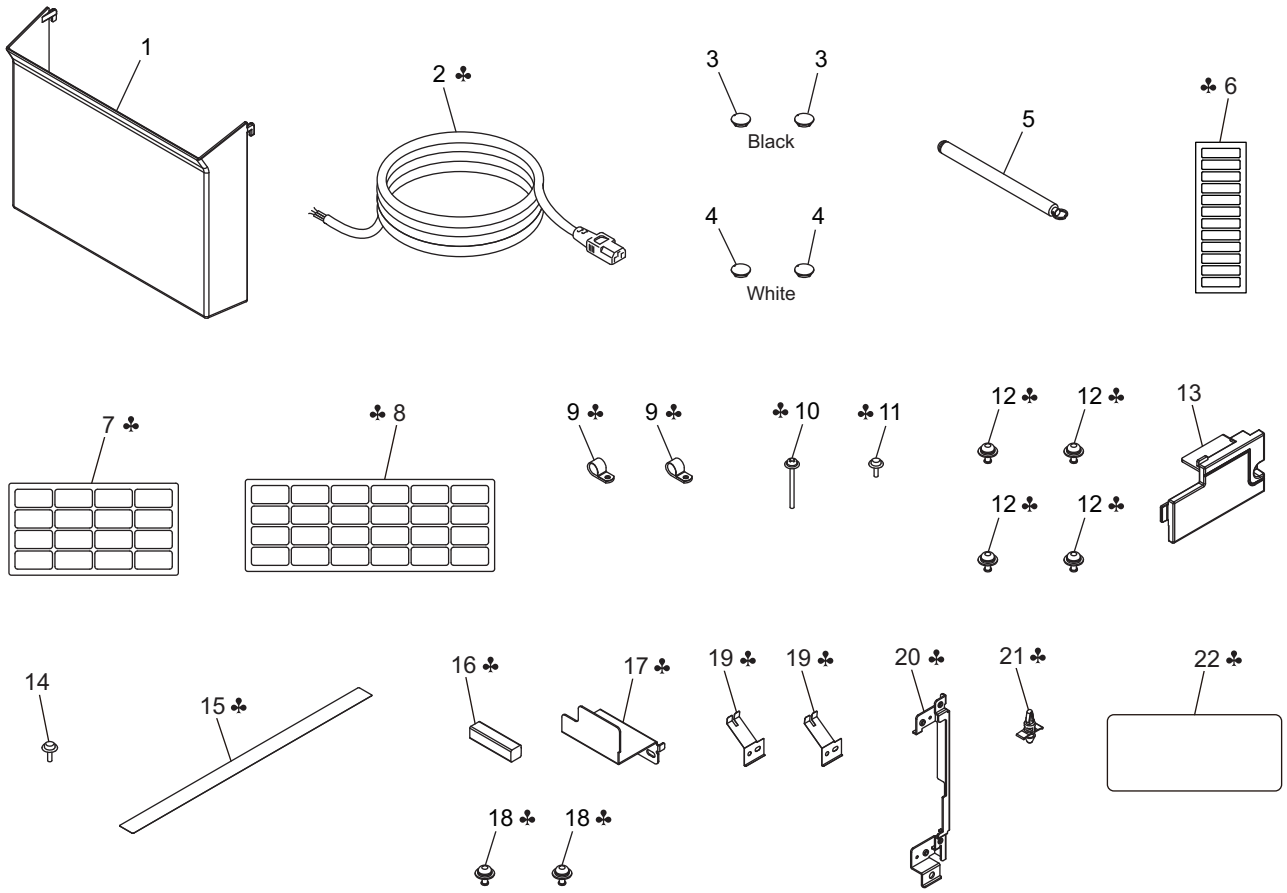

Page	Key	Parts No.	Description	Service Manual	Destinations	Class	Quantity
50	1	A0ED166200	Holder			C	1
50	2	A0EDN30201	Power source Cord /230V		D1,D3,E,F2,G1,I,K	D	1
50	3	A00J169100	Cover			C	2
50	4	A02E167700	Cover			C	2
50	5	A5C1192100	Pen			C	1
50	6	A5C1947000	Label		A,A1	C	1
50	6	A5C1947100	Label		B,D1,D3,E,F2,G1,G2,I,K	C	1
50	7	A161943400	Label Paper Size/Inch		B,G2	C	1
50	8	A161943301	Label Paper Size/Metric		A,A1,C,D1,D3,E,F2,G1,I,K	C	1
50	9	V500020040	clamp		C,D1,D3,E,F2,G1,I,K	D	2
50	10	V116033003	Screw		C,D1,D3,E,F2,G1,I,K	V	1
50	11	V153030803	Screw		C,D1,D3,E,F2,G1,I,K	V	1
50	12	V116030603	Screw		C,D1,D3,E,F2,G1,I,K	V	4
50	13	A161166101	Cover			C	1
50	14	V116030804	Screw			V	1
50	15	A121944700	Label Prohibit		C,D1,D3,E,F2,G1,I,K	C	1
50	16	A61F130600	Seal		C,D1,D3,E,F2,G1,I,K	C	1
50	17	A61F130500	Mounting Plate		C,D1,D3,E,F2,G1,I,K	C	1
50	18	V116040803	Screw		C,D1,D3,E,F2,G1,I,K	V	2
50	19	A61F130200	Ground Plate		C,D1,D3,E,F2,G1,I,K	C	2
50	20	A61F130100	Mounting Plate		C,D1,D3,E,F2,G1,I,K	C	1
50	21	V502010032	spacer		C,D1,D3,E,F2,G1,I,K	D	1

50	22	A1UD947400	Label		A,A1	C	1

1.36 MAINTENANCE LIST

- The items with no Page/Key numbers are not handled as spare parts.

No.	Section	PM Parts Description	Maintenance Cycle (K=1,000)		Parts No.	Destinations	Page/Key	Note
			QTY	Replace				
1	Paper feed section	Tray 1 pick-up roller	1	300k	A5C1562200		P17-30	*2, *4
2		Tray 1 feed roller	1	300k	A00J563600		P17-14	*2, *4
3		Tray 1 separation roller	1	300k	A00J563600		P18-6	*2, *4
4		Tray 2 pick-up roller	1	300k	A5C1562200		P19-34	*2, *4
5		Tray 2 feed roller	1	300k	A00J563600		P19-18	*2, *4
6		Tray 2 separation roller	1	300k	A00J563600		P20-6	*2, *4
7		Manual bypass tray feed roller	1	200k	A00F623201		P31-10	*2, *4
8		Manual bypass tray separation roller assy	1	200k	4658015106		P32-30	*2, *4
9	Processing section	Toner cartridge *1	1	24k	-	bizhub 364e		
10			1	24k	-	bizhub 284e		
11			1	24k	-	bizhub 224e		
18		Drum unit *1	1	120k	-	bizhub 364e		*3
19			1	120k	-	bizhub 284e		*3
20			1	70k	-	bizhub 224e		*3
21		Developing unit	1	570k	-	bizhub 364e		*3
24			1	545k	-	bizhub 284e		*3
27			1	520k	-	bizhub 224e		*3
30		Ozone filter	1	300k	A161R72700	bizhub 364e	P42-5	*3, *5
31			1	280k	A161R72700	bizhub 284e	P42-5	*3, *5
32			1	225k	A161R72700	bizhub 224e	P42-5	*3, *5
33		Waste toner box *1	1	100k	A4NNWY1		P12-9	*6
34	Image transfer section	Transfer belt unit	1	300k	A161R70000	bizhub 364e	P15-1	*3
35			1	280k	A161R70000	bizhub 284e	P15-1	*3
36			1	225k	A161R70000	bizhub 224e	P15-1	*3
37		Transfer roller unit	1	300k	A161R71400	bizhub 364e	P28-23	*3, *5
38			1	280k	A161R71400	bizhub 284e	P28-23	*3, *5
39			1	225k	A161R71400	bizhub 224e	P28-23	*3, *5
40	Fusing section	Fusing unit 100V1	1	570k	A161R71744	bizhub 364e	P35-5	*3
41			1	545k	A161R71744	bizhub 284e	P35-5	*3
42			1	520k	A161R71744	bizhub 224e	P35	*3
43		Fusing unit 120V	1	590k	A161R71844	bizhub 364e	P35	*3
44			1	590k	A161R71844	bizhub 284e	P35	*3
45			1	590k	A161R71844	bizhub 224e	P35	*3
46		Fusing unit 230V	1	600k	A161R71011	bizhub 364e	P35	*3
47			1	600k	A161R71011	bizhub 284e	P35	*3
48			1	600k	A161R71011	bizhub 224e	P35	*3

- *1:The parts can be replaced either by user or service engineer.
- *2:Actual durable cycle (life counter value)
- *3:Field standard yield
- *4:Replace those three parts at the same time.
- *5:The ozone filter and the transfer roller unit are furnished with the transfer belt unit so that all of them are replaced at same time.
- *6:A waste toner full condition is detected with detecting the actual waste toner emissions.

1.37 DESTINATION

Destination No.		Destinations		V	Hz	Model No.
A	A1	JAPAN		100	50/60	A61F001/A61G001/A61H001
	A2	JAPAN				
B		USA, CANADA		120	60	A61F001/A61G001/A61H001
C		EUROPEAN TYPE		220-240	50/60	A61F001/A61G001/A61H001
D	D1	S.E ASIA TYPE	THAILAND, SRI LANKA, SINGAPORE, MALAYSIA, HONG KONG, PAKISTAN, INDIA, BANGLADESH, INDONESIA	220-240	50/60	A61F001/A61G001/A61H001
	D3	OCEAINA TYPE	AUSTRALIA, NEW ZEALAND	220-240	50/60	A61F001/A61G001/A61H001
E		PHILIPPINES		220-240		A61F001/A61G001/A61H001
F	F1	SAUDI ARABIA				
	F2	SAUDI ARABIA		220-240	50/60	A61F001/A61G001/A61H001
G	G1	C.S AMERICA		220-240	50/60	A61F001/A61G001/A61H001
	G2	C.S AMERICA		120	60	A61F001/A61G001/A61H001
H		TAIWAN				
I		JORDAN, LEBANON, SYRIA, SOUTH AFRICA, IRAQ, IRAN, N.YEMEN, CAMEROON, UAE, BAHRAIN, OMAN, QATAR, KUWAIT, KENYA, TUNISIA, IVORY COAST, MOROCCO		220-240	50/60	A61F001/A61G001/A61H001
J		CHINA				
K		KOREA		220-240	50/60	A61F001/A61G001/A61H001

2. DOCUMENT FEEDER (DF-624)

2.1 EXTERNAL PARTS

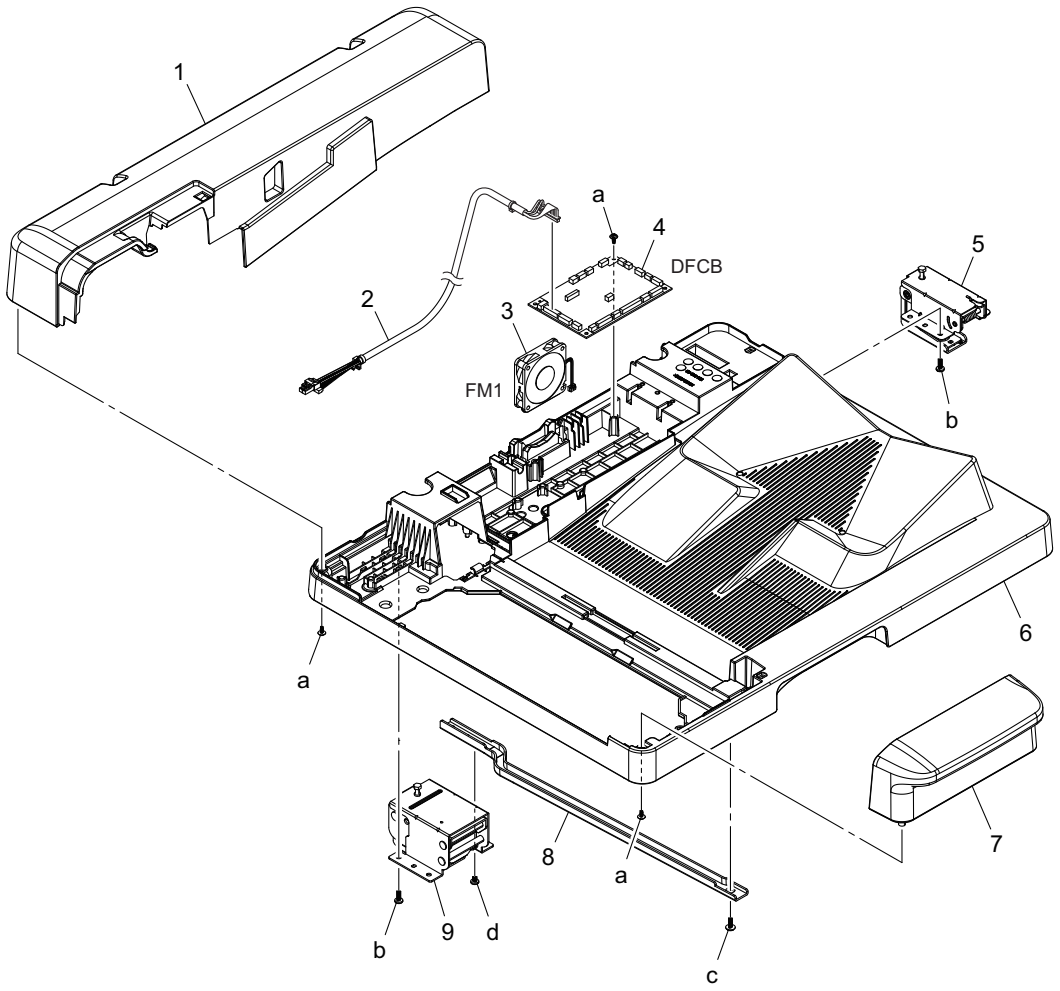

Page	Key	Parts No.	Description	Service Manual	Destinations	Class	Quantity
1	1	A3CFPP3202	Rear Cover			C	1
1	2	A3CFPP6900	Wire Harness Assy			D	1
1	3	9J06M10000	FAN MOTOR	DF cooling fan motor (FM1)		C	1
1	4	A3CFPP5Q00	PW Board Assy	DF control board (DFCB)		I	1
1	5	A3CFPP2701	Hinge-R			C	1
1	6	A3CFPP1S03	Base Frame			D	1
1	7	A3CFPP3302	Front Cover			C	1
1	8	A3CFPP1Y00	Reinforce Plate			D	1
1	9	A3CFPP2602	Hinge-L			C	1
1	a	A3CFPP2G00	Screw			C	
1	b	A143PP0J00	Screw			C	
1	c	A143PP8E01	Screw			C	
1	d	A143PP0H00	Screw			C	

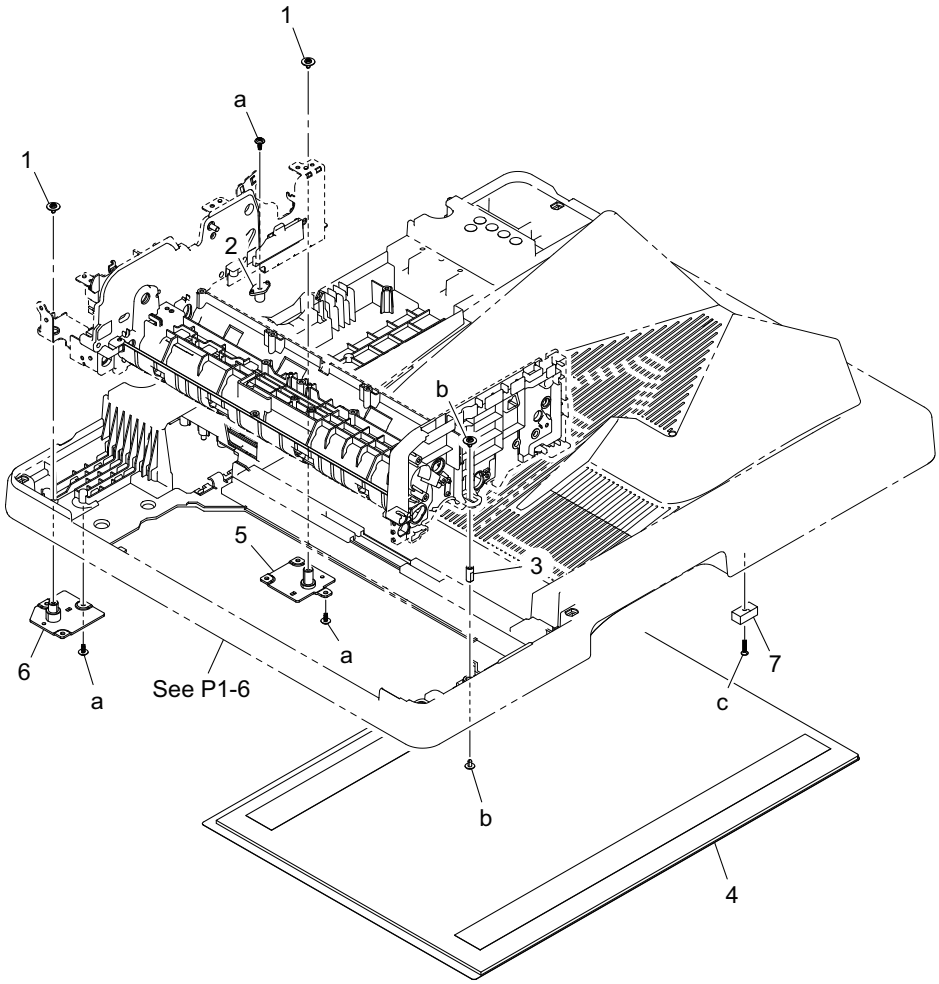

Page	Key	Parts No.	Description	Service Manual	Destinations	Class	Quantity
2	1	A3CFPP6B00	Screw			C	2
2	2	A3CFPP2A01	Shaft			D	1
2	3	A3CFPP2R00	Guide			C	1
2	4	A3CFPP2301	White Sheet			C	1
2	5	A3CFPP2P01	Bracket			D	1
2	6	A3CFPP2N00	Bracket			D	1
2	7	A143PP2901	Magnet			D	1
2	a	A3CFPP2G00	Screw			C	
2	b	A143PP7M00	Screw			C	
2	c	A143PP0C00	Screw			C	

2.2 PAPER FEED TRAY SECTION

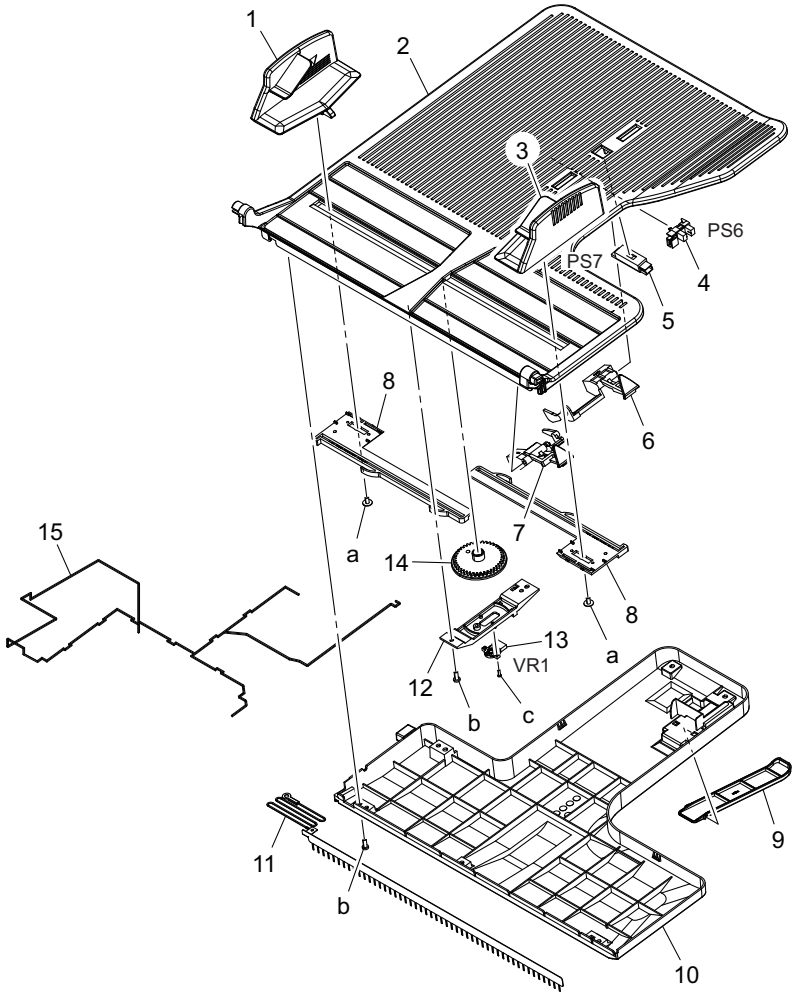

Page	Key	Parts No.	Description	Service Manual	Destinations	Class	Quantity
3	1	A3CFPP5G03	Regulating Plate			C	1
3	2	A3CFPP5B01	Cover			C	1
3	3	A3CFPP5F03	Regulating Plate			C	1
3	4	A108M50100	Photointerrupter	Document length size sensor/1 (PS6)		B	1
3	5	A108M50000	Photoreflector	Document length size sensor/2 (PS7)		B	1
3	6	A3CFPP5C00	Lever			C	1
3	7	A3CFPP5H00	Lever			C	1
3	8	A143PP6F01	Rack			C	2
3	9	A3CFPP5J01	Lever			C	1
3	10	A3CFPP5E02	Tray			C	1
3	11	A3CFPP5D01	Neuralizing Brush			C	1
3	12	A143PP6M01	Holder			D	1
3	13	A143PP6X00	PW Board Assy	Document width size sensor (VR1)		C	1
3	14	A143PP6K01	Gear 40T			C	1
3	15	A3CFPP5X00	Wire Harness Assy			D	1
3	a	A143PP0B00	Screw			C	
3	b	A143PP0A00	Screw			C	
3	c	A143PP8R00	Screw			C	

2.3 PAPER TAKE-UP SECTION

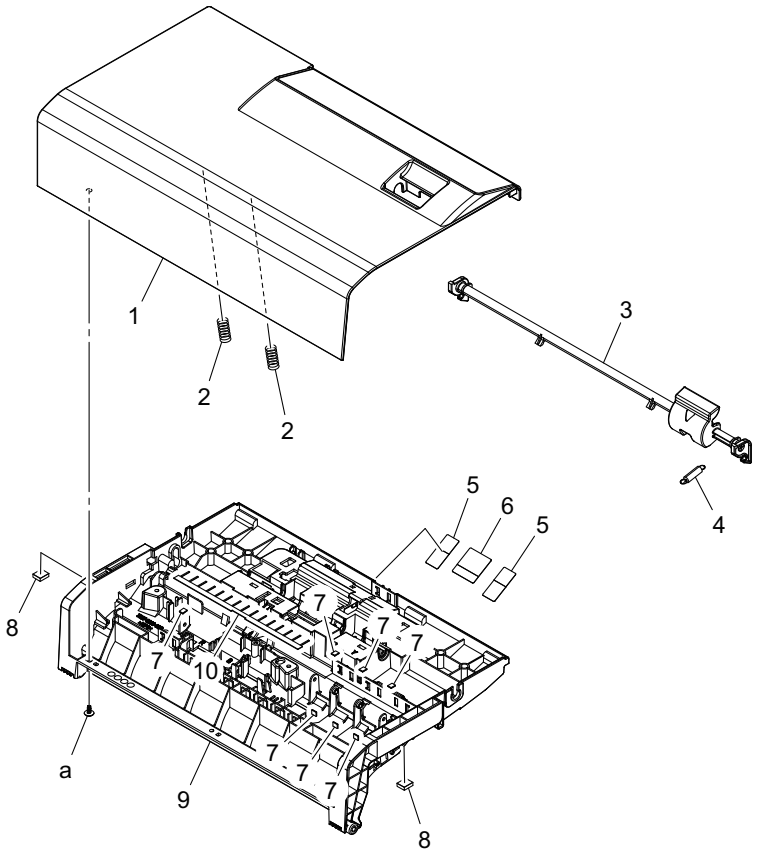

Page	Key	Parts No.	Description	Service Manual	Destinations	Class	Quantity
4	1	A3CFPP4Y02	Left Cover			C	1
4	2	A143PP5F01	Pressure Spring			C	2
4	3	A143PP5R03	Knob			C	1
4	4	A143PP5V00	Tension Spring			C	1
4	5	A143PP6100	Film			C	2
4	6	A3CFPP5300	Film			C	1
4	7	A3CFPP5A00	Sponge			C	7
4	8	A143PP5X00	Sponge			C	2
4	9	A3CFPP5002	Cover			D	1
4	10	A143PP1W00	Neuralizing Brush			C	1
4	a	A3CFPP2G00	Screw			C	

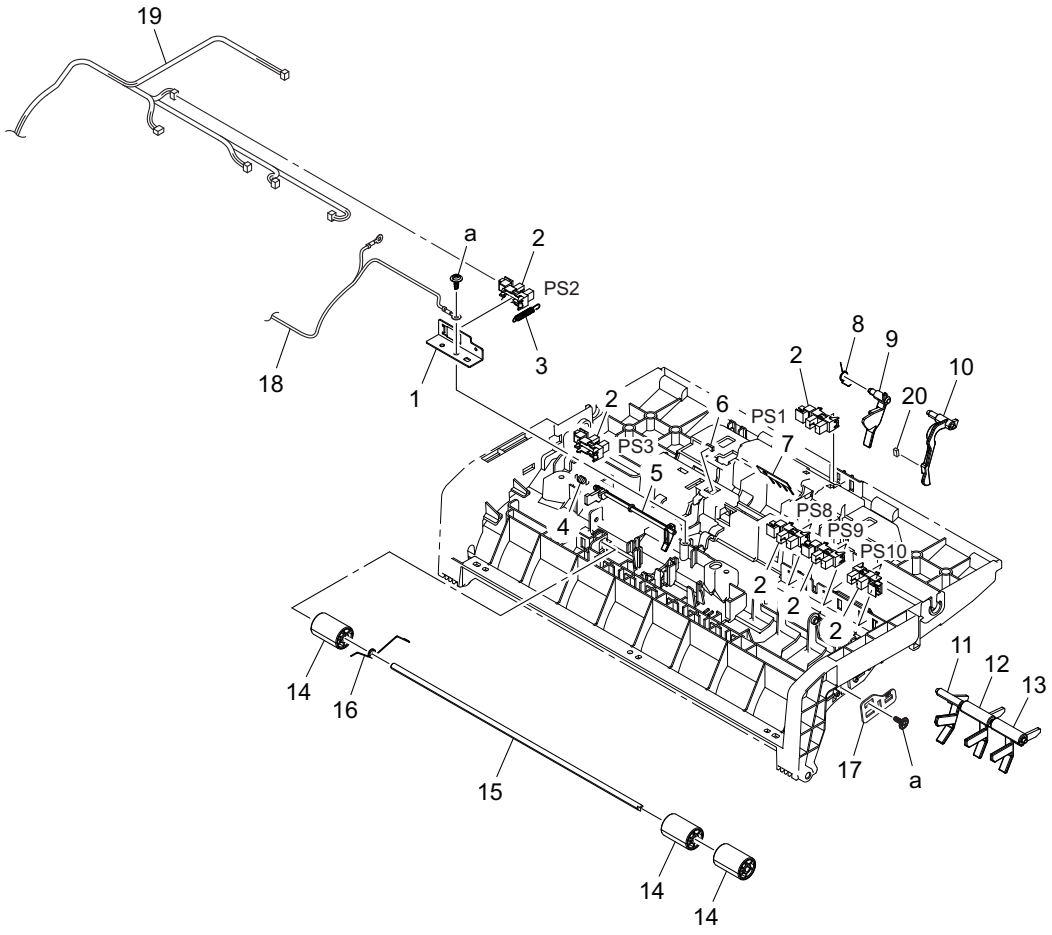

Page	Key	Parts No.	Description	Service Manual	Destinations	Class	Quantity
5	1	A3CFPP5K00	Bracket			D	1
5	2	A108M50100	Photointerrupter	Document empty sensor (PS1) After Separate sensor (PS2) Document registration sensor (PS3) Mixed original sensor/1 (PS8) Mixed original sensor/2 (PS9) Mixed original sensor/3 (PS10)		B	6
5	3	A143PP6900	Tension Spring			C	1
5	4	A143PP1B00	Torsion Spring			C	1
5	5	A3CFPP5L00	Lever			C	1
5	6	A143PP1Y00	Sponge			C	1
5	7	A143PP6800	Neuralizing Brush			C	1
5	8	A3CFPP5200	Torsion Spring			C	1
5	9	A3CFPP4X01	Lever			C	1
5	10	A3CFPP4V00	Lever			C	1
5	11	A143PP5J01	Lever			C	1
5	12	A143PP5K01	Lever			C	1
5	13	A143PP5M01	Lever			C	1
5	14	A3CFPP4T01	Roller			C	3
5	15	A3CFPP4U01	Shaft			D	1
5	16	A3CFPP5400	Torsion Spring			C	1
5	17	A3CFPP6C00	Bracket			D	1
5	18	A143PP7301	Wire Harness Assy			D	1
5	19	A3CFPP5V00	Wire Harness Assy			D	1
5	20	A3CFPP1700	Magnet			D	1
5	a	A3CFPP2G00	Screw			C	

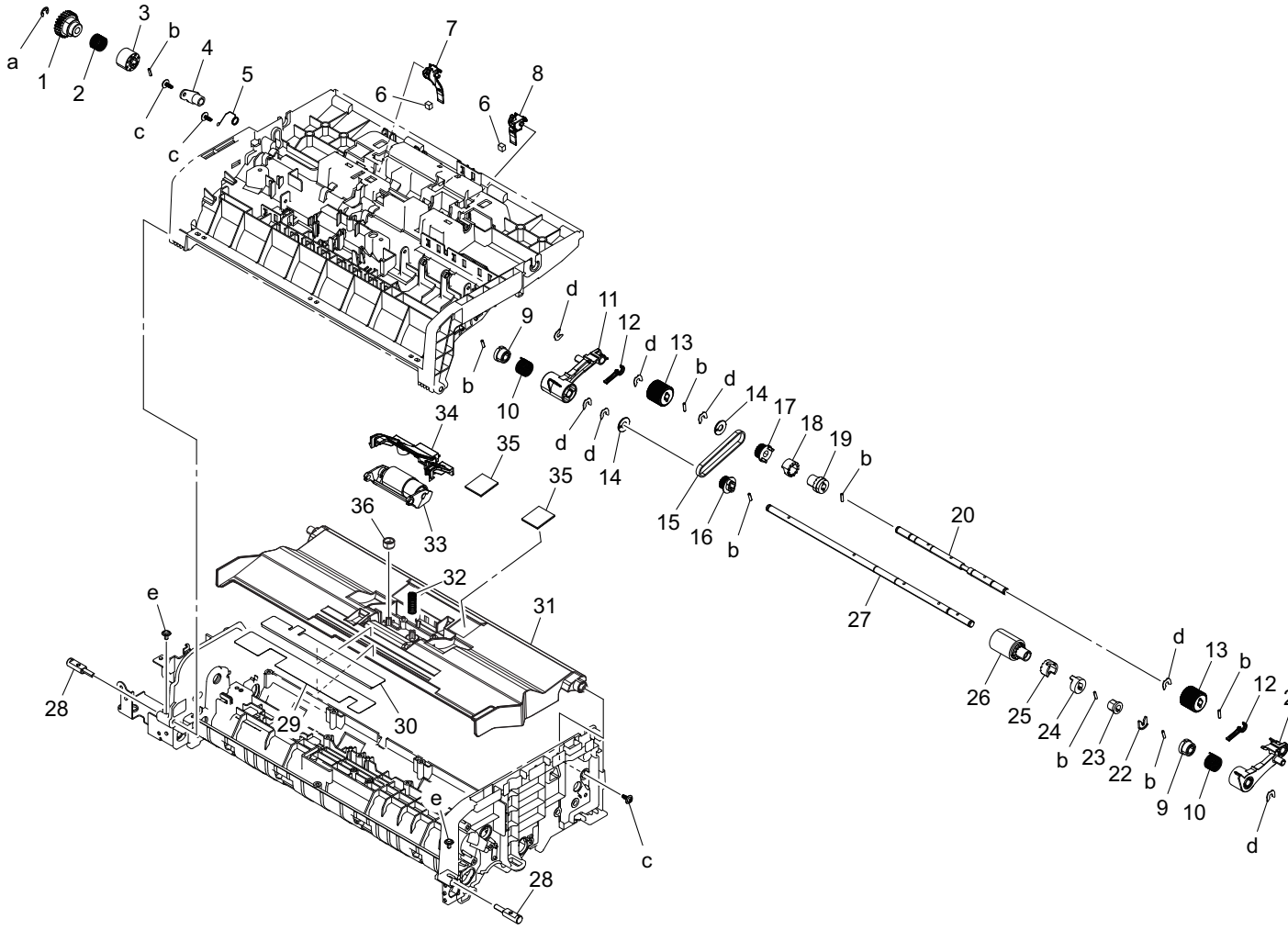

Page	Key	Parts No.	Description	Service Manual	Destinations	Class	Quantity
6	1	A3CFPP4R00	Gear			C	1
6	2	A3CFPP6D00	Torsion Spring			C	1
6	3	A143PP4X01	Holder			C	1
6	4	A3CFPP1J01	Bushing			C	1
6	5	A3CFPP5801	Torsion Spring			C	1
6	6	A143PP9G00	Damper			C	2
6	7	A143PP5U02	Stopper			C	1
6	8	A143PP5T02	Stopper			C	1
6	9	A143PP4T01	Holder			C	2
6	10	A3CFPP5602	Torsion Spring			C	2
6	11	A143PP4V02	Lever			C	1
6	12	A143PP5301	Stopper			C	2
6	13	A143PP5200	Roller			A	2
6	14	A143PP5Y01	Flange			D	2
6	15	A143563300	TIMING BELT 134L			C	1
6	16	A143PP5A00	Pulley 19T			C	1
6	17	A143PP5000	Pulley 21T			C	1
6	18	A143PP5101	Coupling			C	1
6	19	A143PP4Y00	Holder			C	1
6	20	A143PP5403	Shaft			D	1
6	21	A143PP4R03	Lever			C	1
6	22	A143PP5B01	Stop Ring			C	1
6	23	A143PP5901	Bushing			C	1
6	24	A143PP5601	Coupling			C	1
6	25	A143PP6601	Coupling			C	1

6	26	A143563100	Roller			A	1
6	27	A3CFPP4S01	Shaft			D	1
6	28	A3CFPP1600	Shaft			D	2
6	29	A3CFPP4P00	Film			C	1
6	30	A3CFPP4Q00	Film			C	1
6	31	A3CFPP4M02	Guide			D	1
6	32	A3CFPP4L00	Pressure Spring			C	1
6	33	A3CFPP4H00	Roller Assy			A	1
6	34	A3CFPP4G00	Cover Assy			C	1
6	35	A3CFPP4N00	Pad			C	2
6	36	A3CFPP6L00	Spacer			C	1
6	a	A143PP0Q00	Retaining Ring			C	
6	b	A143PP4S00	Pin			C	
6	c	A3CFPP2G00	Screw			C	
6	d	A143PP5501	Retaining Ring			C	
6	e	A143PP7M00	Screw			C	

2.4 PAPER TRANSPORT SECTION

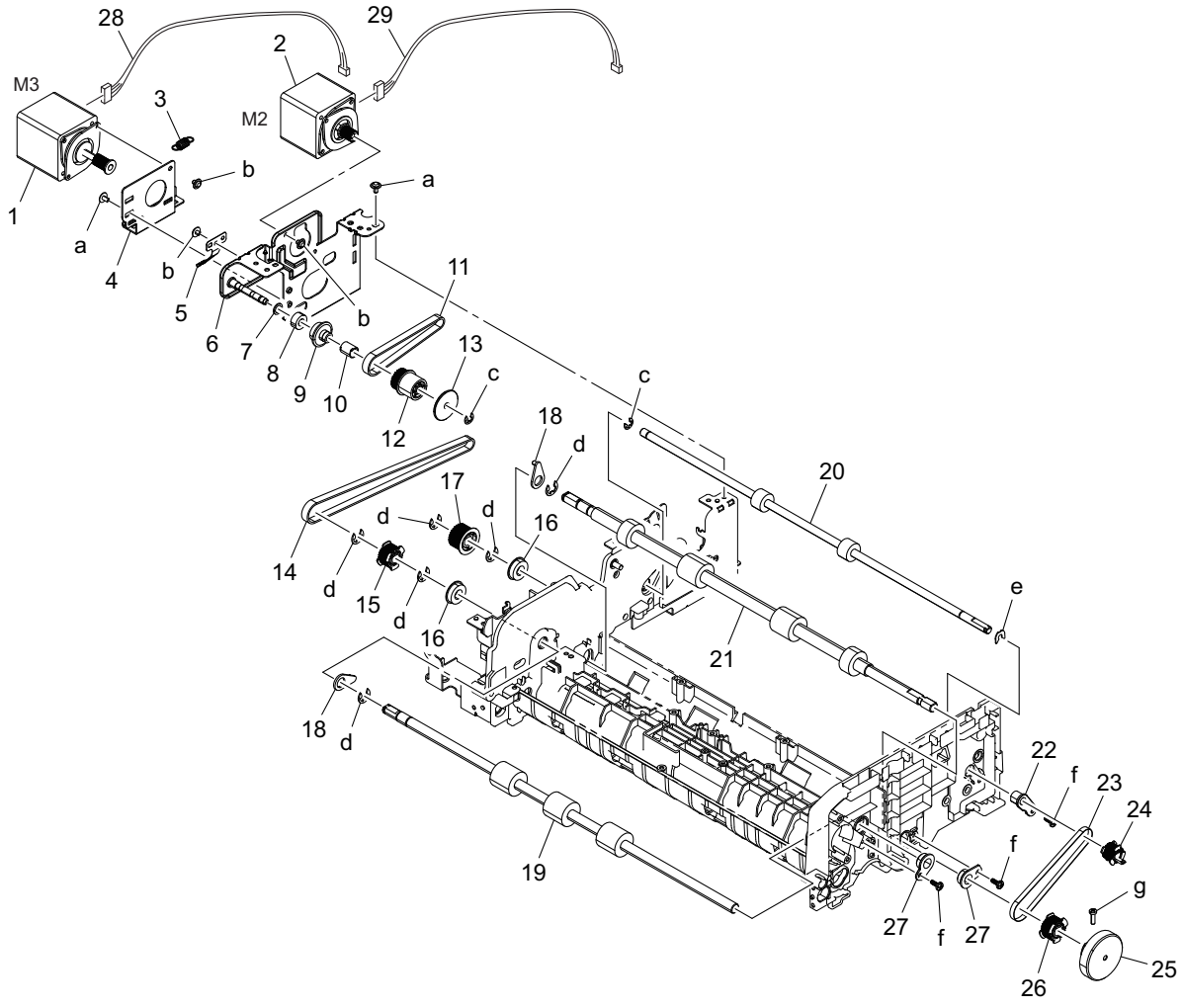

Page	Key	Parts No.	Description	Service Manual	Destinations	Class	Quantity
7	1	A3CFPP5U00	Motor	Registration motor (M3)		C	1
7	2	A3CFPP5S00	Motor	Document feed motor (M2)		C	1
7	3	A3CFPP3K00	Tension Spring			C	1
7	4	A3CFPP3G00	Bracket			C	1
7	5	A3CFPP2C00	Plate Spring			D	1
7	6	A3CFPP3F01	Bracket			D	1
7	7	A3CFPP3R00	Washer			C	1

7	8	A143PP9300	BEARING			C	1
7	9	A3CFPP3D01	Pulley			C	1
7	10	A3CFPP3P01	Pressure Spring			C	1
7	11	A3CFPP3A00	Timing Belt			C	1
7	12	A3CFPP3C00	Pulley			C	1
7	13	A3CFPP3900	Flange			C	1
7	14	A3CFPP3B00	Timing Belt			C	1
7	15	A3CFPP3H00	Pulley			D	1
7	16	A143PP1M00	Ball Bearing			C	2
7	17	A3CFPP3J01	Pulley			C	1
7	18	A3CFPP2E00	Bushing			D	2
7	19	A3CFPP1F00	Roller			C	1
7	20	A3CFPP1D00	Roller			C	1
7	21	A3CFPP1E01	Roller			C	1
7	22	A3CFPP1J01	Bushing			C	1
7	23	A3CFPP3400	Timing Belt			C	1
7	24	A3CFPP3800	Pulley			C	1
7	25	A3CFPP1H01	Fly Wheel			D	1
7	26	A3CFPP3500	Pulley			C	1
7	27	A3CF103400	Bushing			C	2
7	28	A3CFPP6700	Harness			D	1
7	29	A3CFPP6801	Harness			D	1
7	a	A143PP7M00	Screw			C	
7	b	A143PP7N00	Screw			C	
7	c	A143PP0Q00	Retaining Ring			C	
7	d	A143PP0P00	Retaining Ring			C	
7	e	A143PP5501	Retaining Ring			C	
7	f	A143PP0A00	Screw			C	
7	g	A3CFPP6E00	Screw			C	

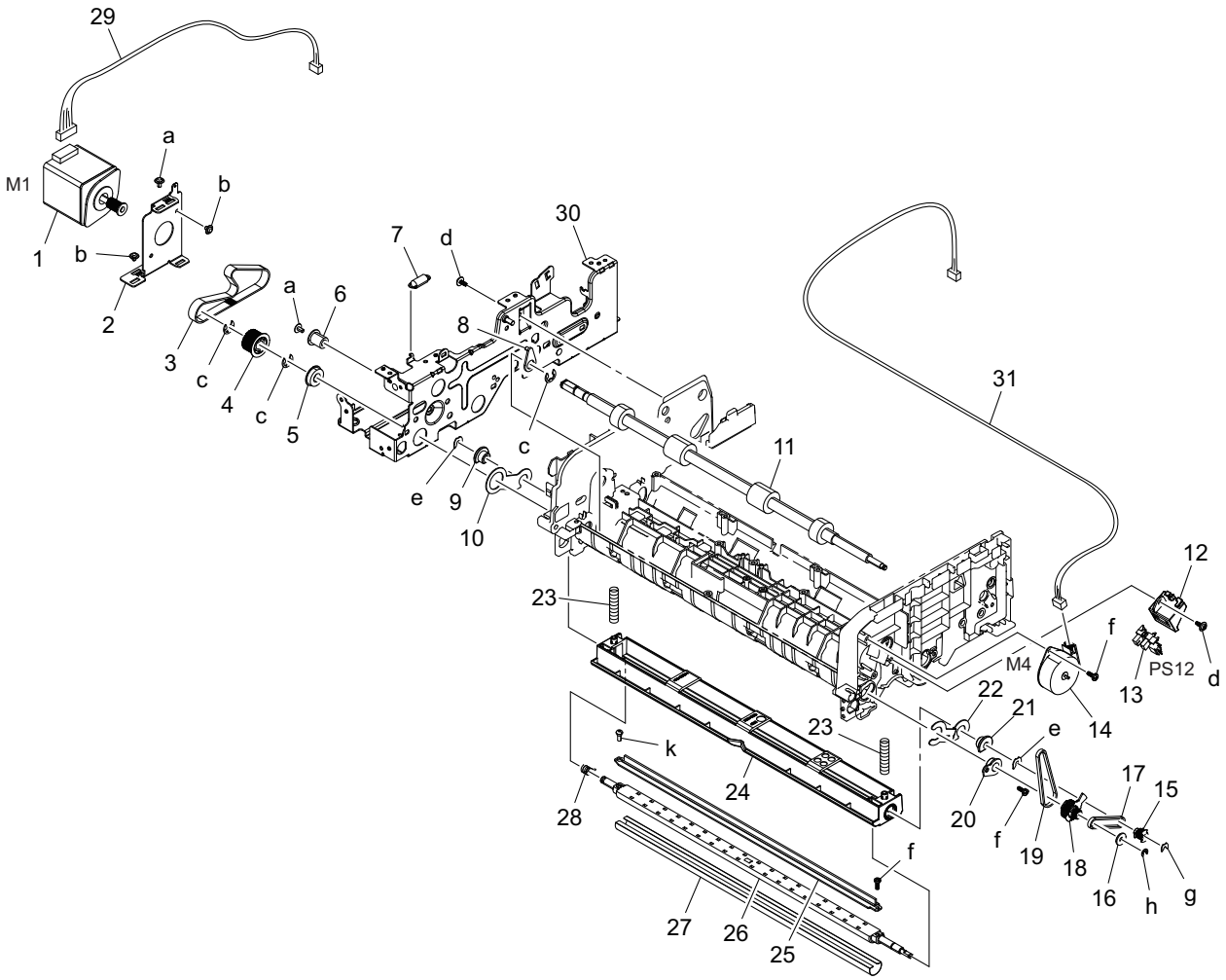

Page	Key	Parts No.	Description	Service Manual	Destinations	Class	Quantity
8	1	A3CFPP5T00	Motor	Document reading motor (M1)		C	1
8	2	A3CFPP3E01	Bracket			D	1
8	3	A3CF213300	Timing belt			C	1
8	4	A3CFPP3J01	Pulley			C	1
8	5	A143PP1M00	Ball Bearing			C	1
8	6	A3CFPP3600	Pulley			C	1
8	7	A3CFPP3700	Tension Spring			C	1
8	8	A3CFPP2E00	Bushing			D	1
8	9	A143PP4D02	Bushing			C	1
8	10	A3CFPP4400	Arm			C	1
8	11	A3CFPP1G00	Roller			C	1
8	12	A3CFPP2B00	Holder			D	1
8	13	A108M50100	Photointerrupter	Document reading glass cleaning sensor (PS12)		B	1
8	14	A3CFPP5R00	Motor	Glass cleaning motor (M4)		C	1
8	15	A3CFPP4800	Pulley			C	1
8	16	A143PP4H01	Flange			D	1
8	17	A3CFPP4900	Timing Belt			C	1
8	18	A3CFPP4700	Pulley			C	1
8	19	A3CFPP4C00	Timing Belt			C	1
8	20	A3CF103400	Bushing			C	1
8	21	A3CFPP4A00	Bushing			C	1
8	22	A3CFPP4300	Arm			C	1
8	23	A3CFPP4B00	Pressure Spring			C	2
8	24	A3CFPP4202	Cover			D	1

8	25	A3CFPP4500	Brush			C	1
8	26	A3CFPP4600	Shaft			D	1
8	27	A3CEPP3301	Sheet			C	1
8	28	A3CFPP4F00	Tension Spring			C	1
8	29	A3CFPP6401	Harness			D	1
8	30	A3CFPP1801	Frame Stake			D	1
8	31	A3CFPP6300	Wire Harness Assy			D	1
8	a	A143PP7M00	Screw			C	
8	b	A143PP7N00	Screw			C	
8	c	A143PP0P00	Retaining Ring			C	
8	d	A3CFPP2G00	Screw			C	
8	e	A143PP5501	Retaining Ring			C	
8	f	A143PP0A00	Screw			C	
8	g	A3CFPP4D00	Retaining Ring			C	
8	h	A3CFPP5M00	Retaining Ring			C	
8	k	A3CFPP4E00	Screw			C	

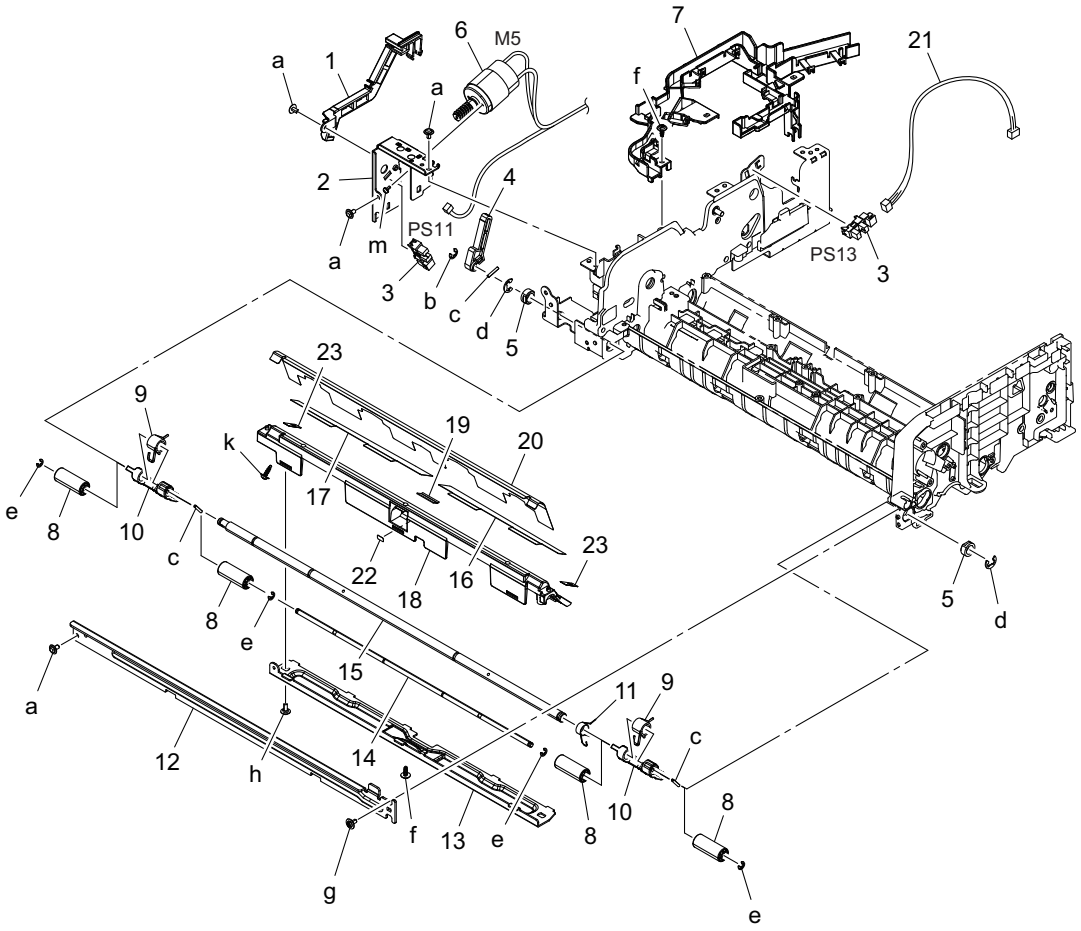

Page	Key	Parts No.	Description	Service Manual	Destinations	Class	Quantity
9	1	A3CFPP3100	Guide			C	1
9	2	A3CFPP3S02	Bracket			D	1
9	3	A108M50100	Photointerrupter	Reading roll position sensor (PS11) Upper door sensor (PS13)		B	2
9	4	A3CFPP3Y01	Lever			C	1
9	5	A3CFPP1K01	Bushing			C	2
9	6	A3CFPP6J00	Motor Assy	Reading roll release motor (M5)		C	1
9	7	A3CFPP3001	Guide			C	1
9	8	A3CFPP4101	Roller			C	4

9	9	A3CFPP3X00	Torsion Spring			C	2
9	10	A3CFPP3V01	Arm			C	2
9	11	A3CFPP2X00	Torsion Spring			C	1
9	12	A3CFPP1401	Bracket			D	1
9	13	A3CFPP1300	Bracket			D	1
9	14	A3CFPP4000	Shaft			D	1
9	15	A3CFPP3U00	Shaft			D	1
9	16	A3CFPP1102	Film			C	1
9	17	A3CFPP1202	Film			C	1
9	18	A3CFPP1002	Guide			D	1
9	19	A3CFPP1P00	Cushion			C	1
9	20	A3CFPP2Q01	Film			C	1
9	21	A3CFPP6000	Wire Harness Assy			D	1
9	22	A3CFPP6M00	Spacer			C	1
9	23	A3CFPP6N00	Spacer			C	2
9	a	A143PP7M00	Screw			C	
9	b	A143PP0Q00	Retaining Ring			C	
9	c	A143PP3X00	Pin			C	
9	d	A143PP0P00	Retaining Ring			C	
9	e	A3CFPP5M00	Retaining Ring			C	
9	f	A3CFPP2G00	Screw			C	
9	g	A3CFPP2F00	Shoulder Screw			D	
9	h	A3CFPP2K00	Screw			C	
9	k	A3CFPP2V00	Screw			C	
9	m	A143PP3M00	Screw			C	

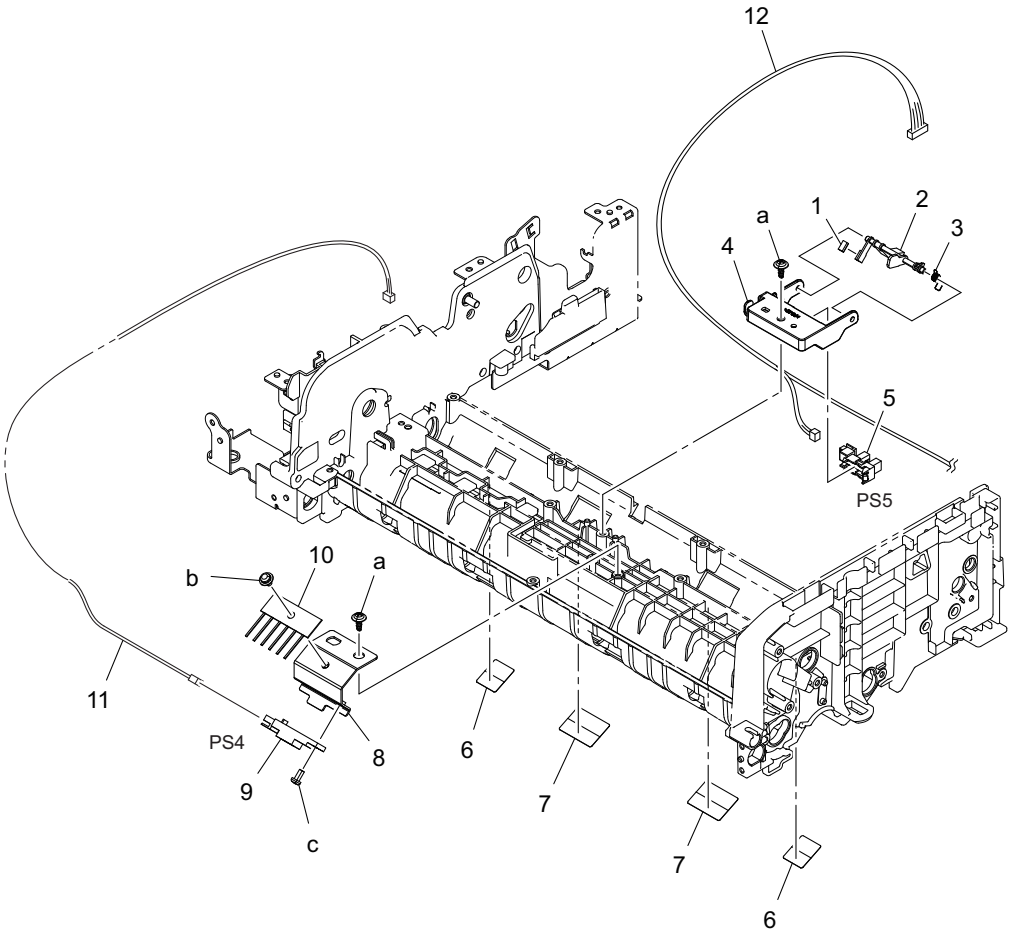

Page	Key	Parts No.	Description	Service Manual	Destinations	Class	Quantity

10	1	A143PP1Y00	Sponge			C	1
10	2	A143PP1A00	Lever			C	1
10	3	A143PP1B00	Torsion Spring			C	1
10	4	A3CFPP1M01	Bracket			D	1
10	5	A108M50100	Photointerrupter	Document exit sensor (PS5)		B	1
10	6	A143PP4G01	Film			C	2
10	7	A143PP4F01	Film			C	2
10	8	A3CFPP1901	Bracket			D	1
10	9	A143PP7900	Solid State Switch	Document reading sensor (PS4)		B	1
10	10	A3CFPP2H01	Neuralizing Brush			C	1
10	11	A3CFPP5Y00	Wire Harness Assy			D	1
10	12	A3CFPP6100	Wire Harness Assy			D	1
10	a	A3CFPP2G00	Screw			C	
10	b	A3CFPP2Y01	Screw			C	
10	c	A143PP0D00	Screw			C	

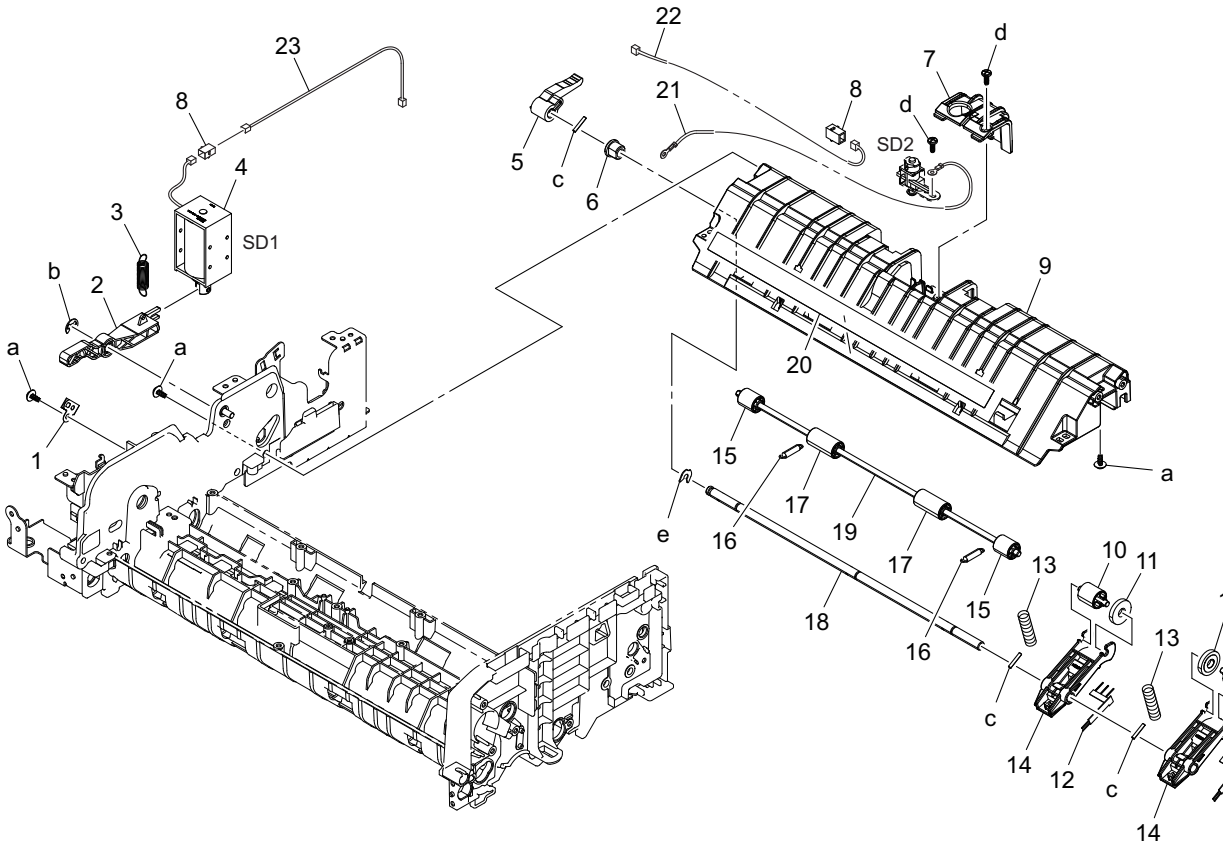

Page	Key	Parts No.	Description	Service Manual	Destinations	Class	Quantity
11	1	A3CFPP2T01	Plate Spring			D	1
11	2	A3CFPP1B00	Lever			C	1
11	3	A143PP1R00	Tension Spring			C	1

11	4	A143PP2C00	Solenoid Assy	Document exit roller release solenoid (SD1)		C	1
11	5	A3CFPP1A00	Lever			C	1
11	6	A143PP8500	Bushing			C	1
11	7	A143PP2501	Cover			C	1
11	8	A143PP8F00	Wire Harness Assy			D	2
11	9	A3CFPP2903	Cover			D	1
11	10	A3CFPP1X01	Roll			C	2
11	11	A143PP8600	Washer			C	2
11	12	A3CFPP2U00	Neuralizing Brush			C	2
11	13	A3CFPP2200	Pressure Spring			C	2
11	14	A3CFPP1V02	Holder			D	2
11	15	A3CFPP1T01	Roller			C	2
11	16	A3CFPP2400	Tension Spring			C	2
11	17	A3CFPP1U01	Roller			C	2
11	18	A3CFPP2100	Shaft			D	1
11	19	A3CFPP2500	Shaft			D	1
11	20	A3CFPP2L00	Film			C	1
11	21	A3CFPP6A00	Wire Harness Assy			D	1
11	22	A3CFPP6500	Wire Harness Assy			D	1
11	23	A3CFPP6600	Wire Harness Assy			D	1
11	a	A3CFPP2G00	Screw			C	
11	b	A143PP0S00	Retaining Ring			C	
11	c	A143PP3X00	Pin			C	
11	d	A143PP0A00	Screw			C	
11	e	A143PP5501	Retaining Ring			C	

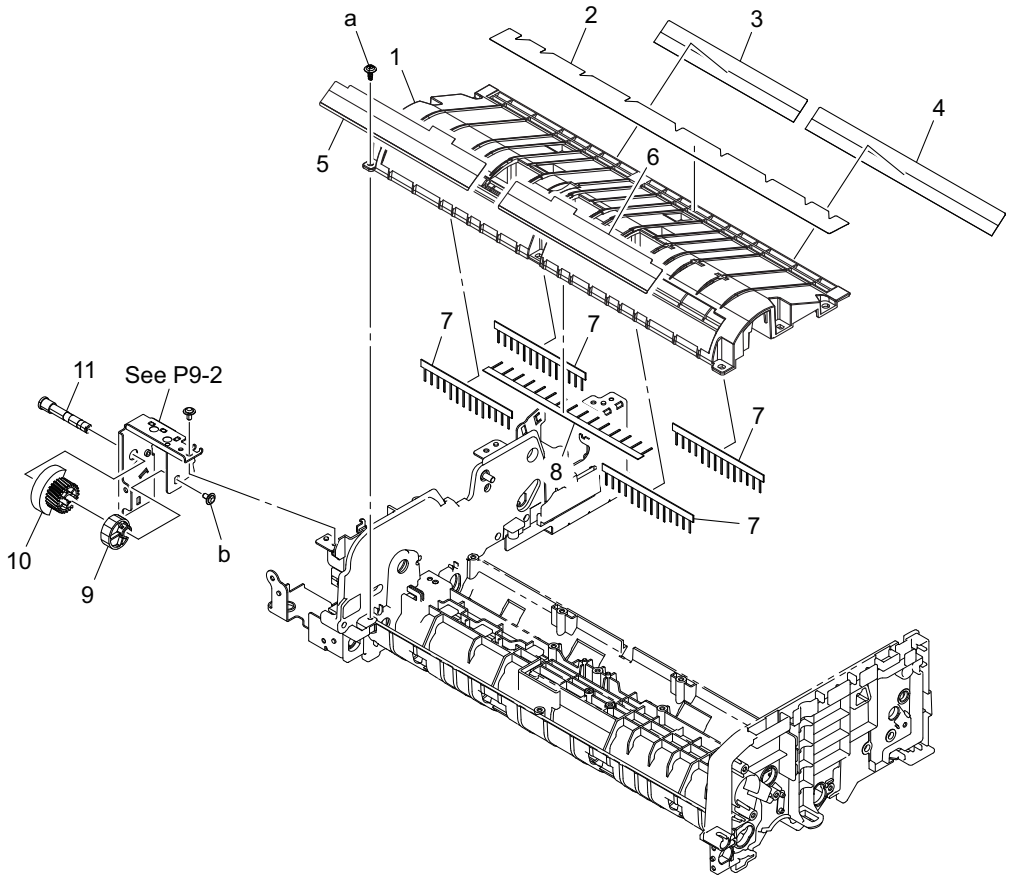

Page	Key	Parts No.	Description	Service Manual	Destinations	Class	Quantity
12	1	A3CFPP1502	Guide			D	1
12	2	A3CFPP1C01	Film			C	1
12	3	A3CFPP1R00	Film			C	1
12	4	A3CFPP1Q00	Film			C	1
12	5	A3CFPP6F00	Film			C	1
12	6	A3CFPP5502	Seal			C	1
12	7	A143PP1X00	Neuralizing Brush			C	4
12	8	A3CFPP1N02	Neuralizing Brush			C	1
12	9	A3CFPP3T00	Cam			C	1
12	10	A143PP3P01	Gear			C	1
12	11	A3CFPP3M00	Shaft			D	1
12	a	A3CFPP6K00	Screw			C	
12	b	A143PP7M00	Screw			C	

2.5 WIRING ACCESSORIES AND JIGS

1 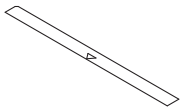	6	11	16	21	26	31	36
2	7	12	17	22	27	32	37
3	8	13	18	23	28	33	38
4	9	14	19	24	29	34	39
5	10	15	20	25	30	35	40

Page	Key	Parts No.	Description	Service Manual	Destinations	Class	Quantity
13	1	9J06PJG100	JIG			S	1

2.6 ACCESSORY PARTS

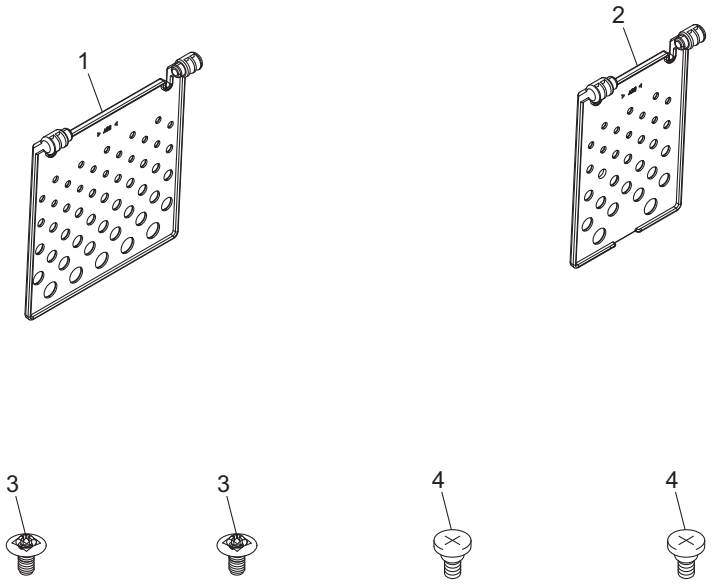

Page	Key	Parts No.	Description	Service Manual	Destinations	Class	Quantity
14	1	A3CF113900	Hinge Cover Left			C	1
14	2	A3CF116400	Hinge Cover Right			C	1
14	3	A143114600	Screw			C	2
14	4	A3CF116100	Screw_two step			C	2

2.7 MAINTENANCE LIST

- The items with no Page/Key numbers are not handled as spare parts.

No.	Section	PM Parts Description	Maintenance Cycle (K=1,000)		Parts No.	Destinations	Page/Key	Note
			QTY	Replace				
1	Paper Take-up Section	Pick-up roller	2	200K	A143PP5200		P6-13	*1 *2
2		Feed roller	1	200K	A143563100		P6-26	*1 *2
3		Separation roller	1	200K	A3CFPP4H00		P6-33	*1 *2

- *1: Actual durable cycle (life counter value)
- *2: Replace those parts at the same time.

2.8 DESTINATION

Destination No.		Destinations		V	Hz	Model No.
A	A1	JAPAN		100	50/60	A3CFWY1
	A2	JAPAN				
B		USA, CANADA		120	60	A3CFWY1
C		EUROPEAN TYPE		220-240	50/60	A3CFWY1
D	D1	S.E ASIA TYPE	THAILAND,SRI LANKA,SINGAPORE,MALAYSIA,HONGKONG,	220-240	50/60	A3CFWY1

			PAKISTAN,INDIA,BANGLADESH,INDONESIA			
	D3	OCEAINA TYPE	AUSTRALIA,NEW ZEALAND	220-240	50/60	A3CFWY1
E		PHILIPPINES		220-240	50/60	A3CFWY1
F	F1	SAUDI ARABIA				
	F2	SAUDI ARABIA		220-240	50/60	A3CFWY1
G	G1	C.S AMERICA		220-240	50/60	A3CFWY1
	G2	C.S AMERICA		120	60	A3CFWY1
H		TAIWAN		110	60	A3CFWY1
I		JORDAN, LEBANON, SYRIA, SOUTH AFRICA, IRAQ, IRAN, N.YEMEN, CAMEROON, UAE, BAHRAIN, OMAN, QATAR, KUWAIT, KENYA, TUNISIA, IVORY COAST, MOROCCO		220-240	50/60	A3CFWY1
J		CHINA		220-240	50/60	A3CFWY1
K		KOREA		220-240	50/60	A3CFWY1

3. DOCUMENT FEEDER (DF-701)

3.1 EXTERNAL PARTS

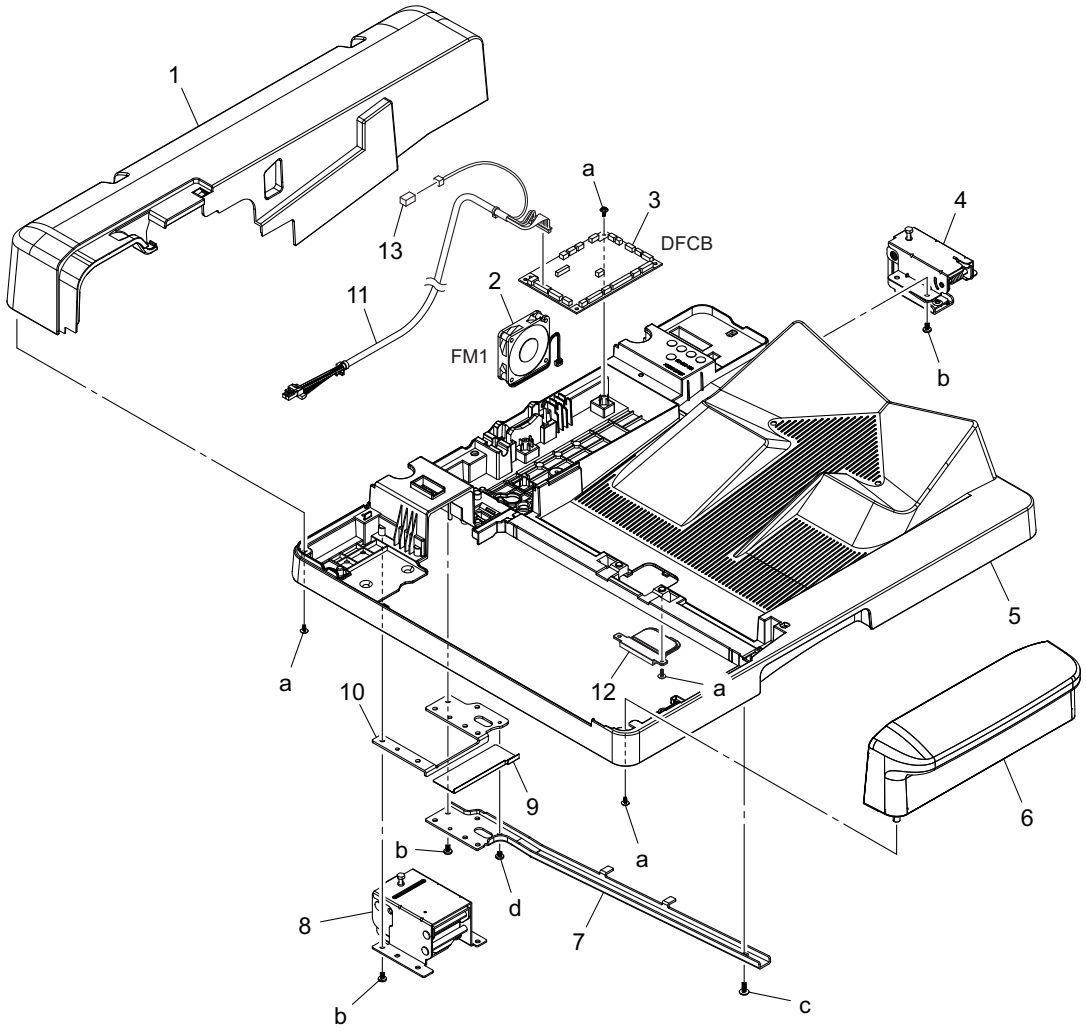

Page	Key	Parts No.	Description	Service Manual	Destinations	Class	Quantity
1	1	A3CEPP2C03	Rear Cover			C	1
1	2	9J06M10000	FAN MOTOR	DF cooling fan motor (FM1)		C	1
1	3	A3CEPP4900	PW Board Assy	DF control board (DFCB)		C	1
1	4	A3CFPP2701	Hinge-R			C	1
1	5	A3CEPP1603	Base Frame			C	1
1	6	A3CEPP2D03	Front Cover			C	1
1	7	A3CEPP1900	Reinforce Plate			D	1
1	8	A3CEPP1D02	Hinge-L			C	1
1	9	A3CEPP2301	Film			C	1
1	10	A3CEPP1M00	Cover			C	1
1	11	A3CEPP4Q01	Wire Harness Assy			D	1
1	12	A3CEPP1802	Cover			C	1
1	13	A143PP8F00	Wire Harness Assy			D	1
1	a	A3CFPP2G00	Screw			C	
1	b	A143PP0J00	Screw			C	
1	c	A143PP8E01	Screw			C	
1	d	A143PP0H00	Screw			C	

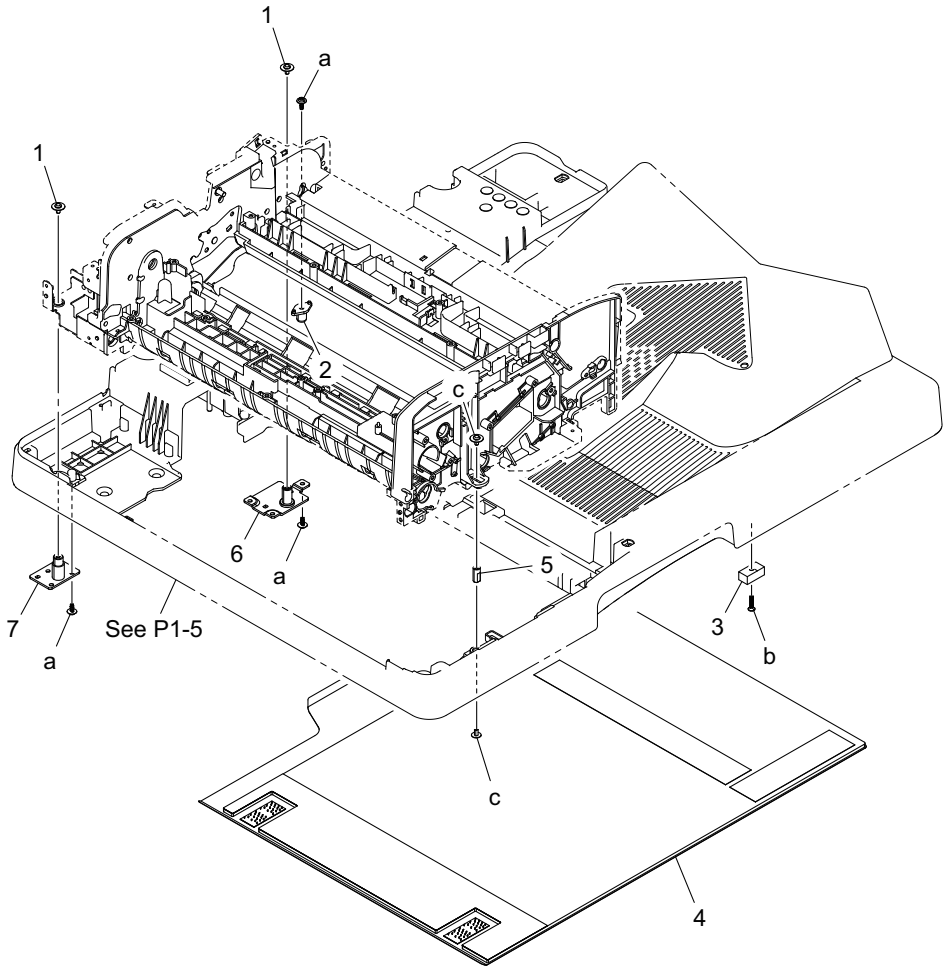

Page	Key	Parts No.	Description	Service Manual	Destinations	Class	Quantity
2	1	A3CFPP6B00	Screw			C	2
2	2	A3CFPP2A01	Shaft			D	1
2	3	A143PP2901	Magnet			D	1
2	4	A3CEPP1B01	White Sheet			C	1
2	5	A3CFPP2R00	Guide			C	1
2	6	A3CEPP2201	Bracket			D	1
2	7	A3CEPP2100	Bracket			D	1
2	a	A3CFPP2G00	Screw			C	
2	b	A143PP0C00	Screw			C	
2	c	A143PP7M00	Screw			C	

3.2 PAPER FEED TRAY SECTION

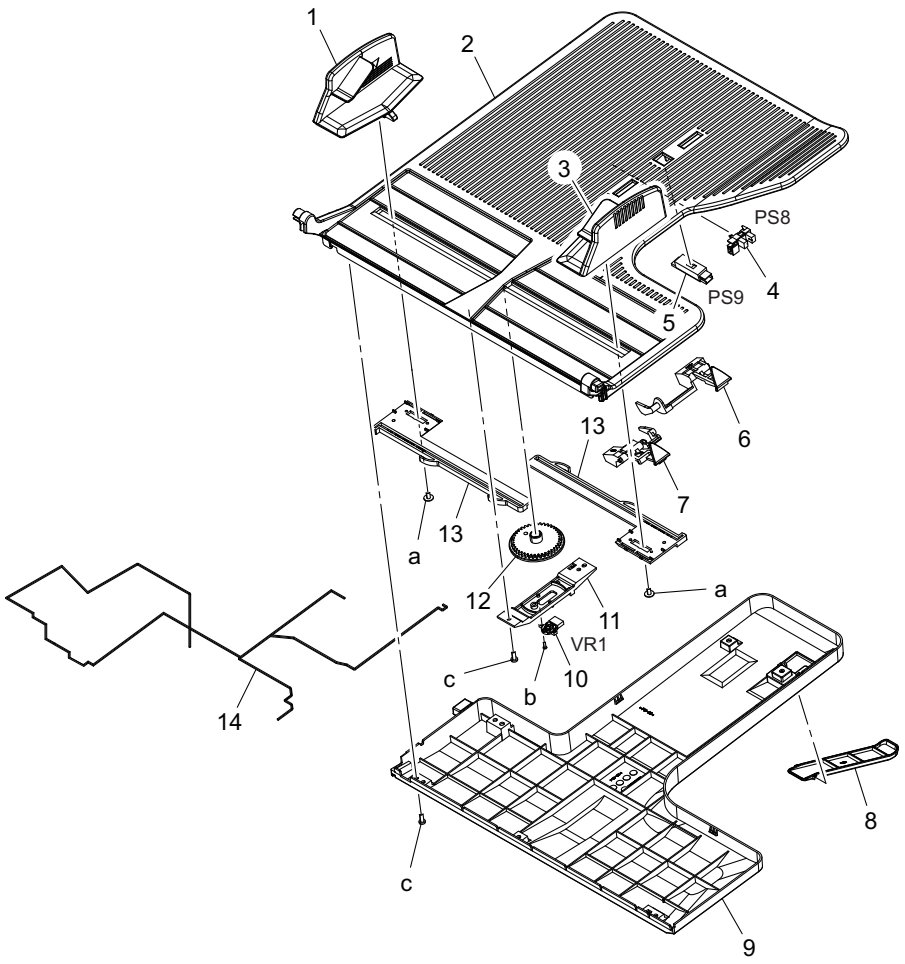

Page	Key	Parts No.	Description	Service Manual	Destinations	Class	Quantity
3	1	A3CFPP5G03	Regulating Plate			C	1
3	2	A3CFPP5B01	Cover			C	1
3	3	A3CFPP5F03	Regulating Plate			C	1
3	4	A108M50100	Photointerrupter	Document length sensor/1 (PS8)		B	1
3	5	A108M50000	Photoreflector	Document length sensor/2 (PS9)		B	1
3	6	A3CFPP5C00	Lever			C	1
3	7	A3CFPP5H00	Lever			C	1
3	8	A3CFPP5J01	Lever			C	1
3	9	A3CEPP4800	Tray			C	1
3	10	A143PP6X00	PW Board Assy	Document width sensor (VR1)		C	1
3	11	A143PP6M01	Holder			D	1
3	12	A143PP6K01	Gear 40T			C	1
3	13	A143PP6F01	Rack			C	2
3	14	A3CEPP4E00	Wire Harness Assy			D	1
3	a	A143PP0B00	Screw			C	
3	b	A143PP8R00	Screw			C	
3	c	A143PP0A00	Screw			C	

3.3 PAPER TAKE-UP SECTION

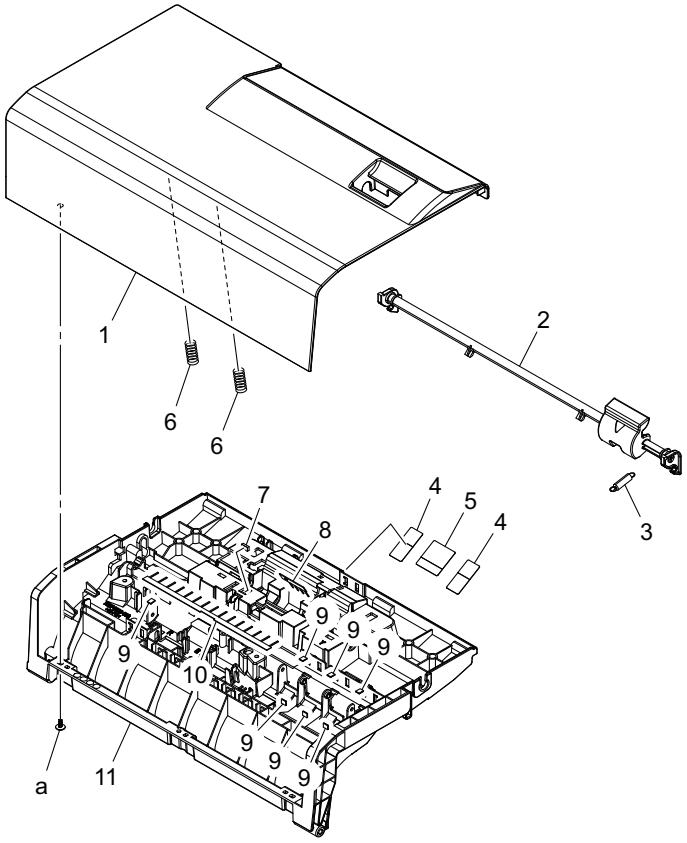

Page	Key	Parts No.	Description	Service Manual	Destinations	Class	Quantity
4	1	A3CEPP4501	Cover			C	1
4	2	A143PP5R03	Knob			C	1
4	3	A143PP5V00	Tension Spring			C	1
4	4	A143PP6100	Film			C	2
4	5	A3CFPP5300	Film			C	1
4	6	A143PP5F01	Pressure Spring			C	2
4	7	A143PP1Y00	Sponge			C	1
4	8	A143PP6800	Neuralizing Brush			C	1
4	9	A3CFPP5A00	Sponge			C	7
4	10	A143PP1W00	Neuralizing Brush			C	1
4	11	A3CEPP4602	Cover			C	1
4	a	A3CFPP2G00	Screw			C	

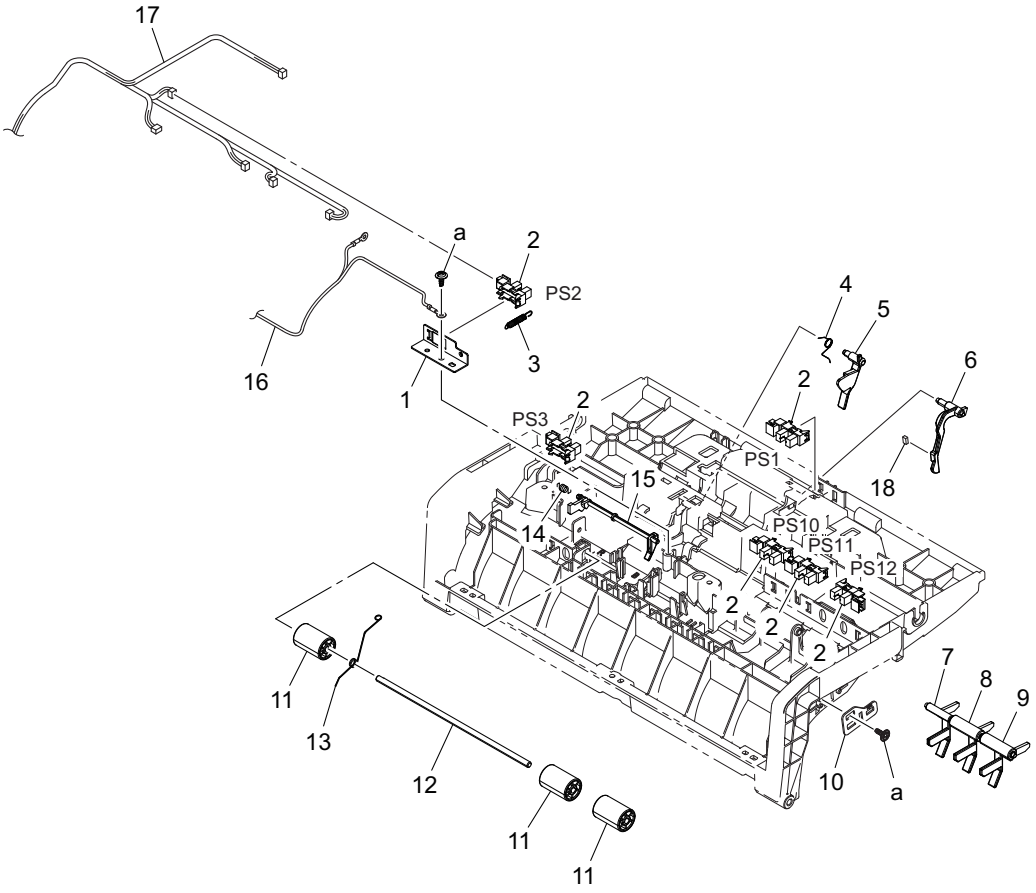

Page	Key	Parts No.	Description	Service Manual	Destinations	Class	Quantity
5	1	A3CFPP5K00	Bracket			D	1
5	2	A108M50100	Photointerrupter	Document empty sensor (PS1) After separate sensor (PS2) Registration sensor (PS3) Mixed original sensor/1 (PS10) Mixed original sensor/2 (PS11) Mixed original sensor/3 (PS12)		B	6
5	3	A143PP6900	Tension Spring			C	1
5	4	A3CFPP5200	Torsion Spring			C	1
5	5	A3CFPP4X01	Lever			C	1
5	6	A3CFPP4V00	Lever			C	1
5	7	A143PP5J01	Lever			C	1
5	8	A143PP5K01	Lever			C	1
5	9	A143PP5M01	Lever			C	1
5	10	A3CFPP6C00	Bracket			D	1
5	11	A3CFPP4T01	Roller			C	3
5	12	A3CFPP4U01	Shaft			D	1
5	13	A3CFPP5400	Torsion Spring			C	1
5	14	A143PP1B00	Torsion Spring			C	1
5	15	A3CFPP5L00	Lever			C	1
5	16	A143PP7301	Wire Harness Assy			D	1
5	17	A3CEPP4D00	Wire Harness Assy			D	1
5	18	A3CFPP1700	Magnet			D	1
5	a	A3CFPP2G00	Screw			C	

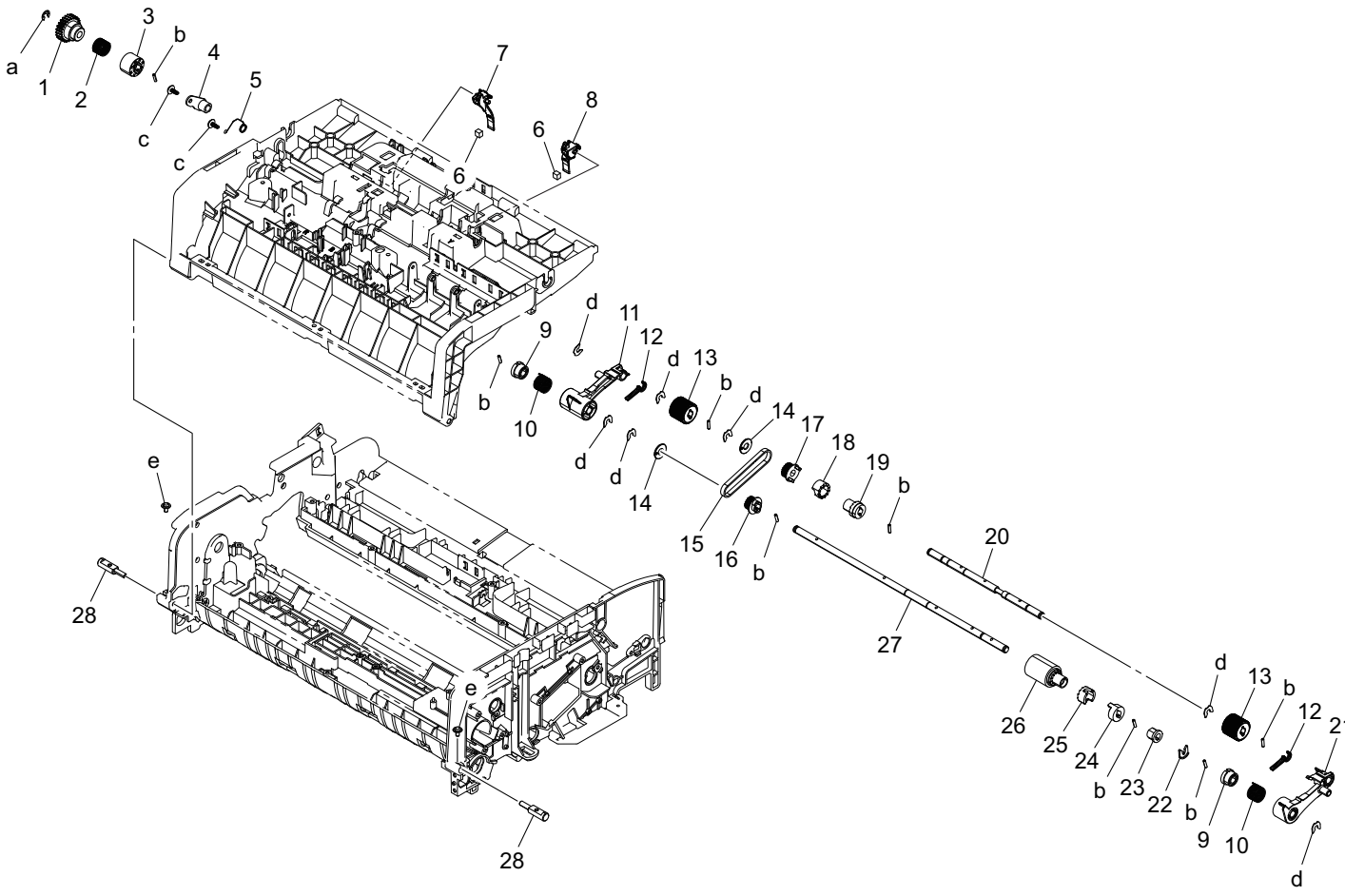

Page	Key	Parts No.	Description	Service Manual	Destinations	Class	Quantity
6	1	A3CFPP4R00	Gear			C	1
6	2	A3CFPP6D00	Torsion Spring			C	1
6	3	A143PP4X01	Holder			C	1
6	4	A3CFPP1J01	Bushing			C	1
6	5	A3CFPP5801	Torsion Spring			C	1
6	6	A143PP9G00	Damper			C	2
6	7	A143PP5U02	Stopper			C	1
6	8	A143PP5T02	Stopper			C	1
6	9	A143PP4T01	Holder			C	2
6	10	A3CFPP5602	Torsion Spring			C	2
6	11	A143PP4V02	Lever			C	1
6	12	A143PP5301	Stopper			C	2
6	13	A143PP5200	Roller			A	2
6	14	A143PP5Y01	Flange			D	2
6	15	A143563300	TIMING BELT 134L			C	1
6	16	A143PP5A00	Pulley 19T			C	1
6	17	A143PP5000	Pulley 21T			C	1
6	18	A143PP5101	Coupling			C	1
6	19	A143PP4Y00	Holder			C	1
6	20	A143PP5403	Shaft			D	1
6	21	A143PP4R03	Lever			C	1
6	22	A143PP5B01	Stop Ring			C	1
6	23	A143PP5901	Bushing			C	1
6	24	A143PP5601	Coupling			C	1
6	25	A143PP6601	Coupling			C	1

6	26	A143563100	Roller			A	1
6	27	A3CFPP4S01	Shaft			D	1
6	28	A3CFPP1600	Shaft			D	2
6	a	A143PP0Q00	Retaining Ring			C	
6	b	A143PP4S00	Pin			C	
6	c	A3CFPP2G00	Screw			C	
6	d	A143PP5501	Retaining Ring			C	
6	e	A143PP7M00	Screw			C	

3.4 PAPER TRANSPORT SECTION

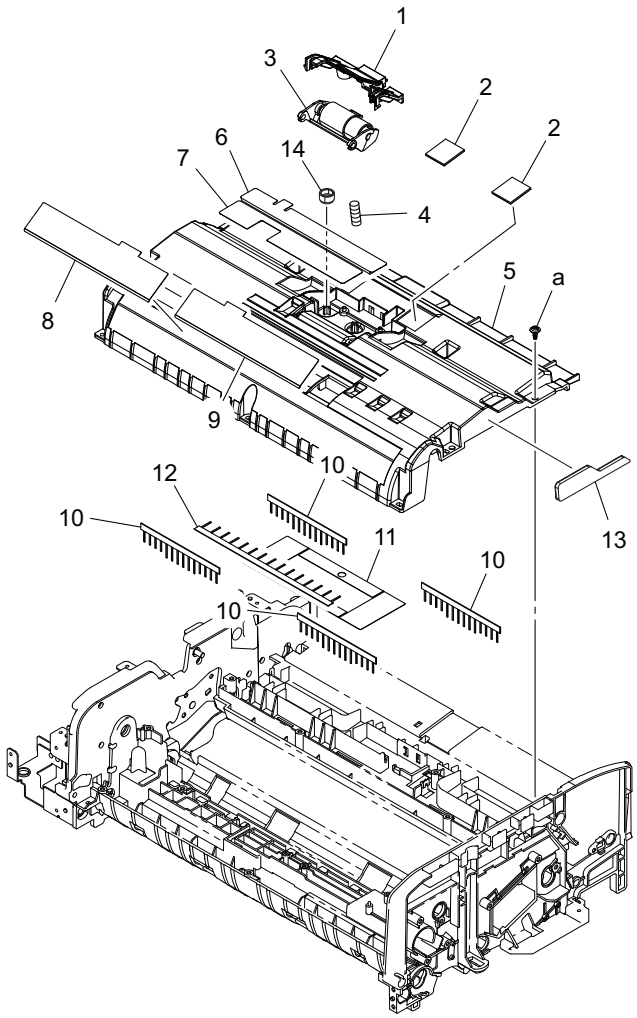

Page	Key	Parts No.	Description	Service Manual	Destinations	Class	Quantity
7	1	A3CFPP4G00	Cover Assy			C	1
7	2	A3CFPP4N00	Pad			C	2
7	3	A3CFPP4H00	Roller Assy			A	1
7	4	A3CFPP4L00	Pressure Spring			C	1
7	5	A3CEPP4403	Guide			C	1
7	6	A3CFPP4Q00	Film			C	1
7	7	A143PP4P01	Film			C	1
7	8	A3CEPP5400	Film			C	1
7	9	A3CEPP5500	Film			C	1
7	10	A143PP1X00	Neuralizing Brush			C	4
7	11	A3CEPP4701	Film			C	1
7	12	A3CFPP1N02	Neuralizing Brush			C	1
7	13	A3CEPP5200	Sponge			D	1
7	14	A3CFPP6L00	Spacer			C	1
7	a	A3CFPP6K00	Screw			C	

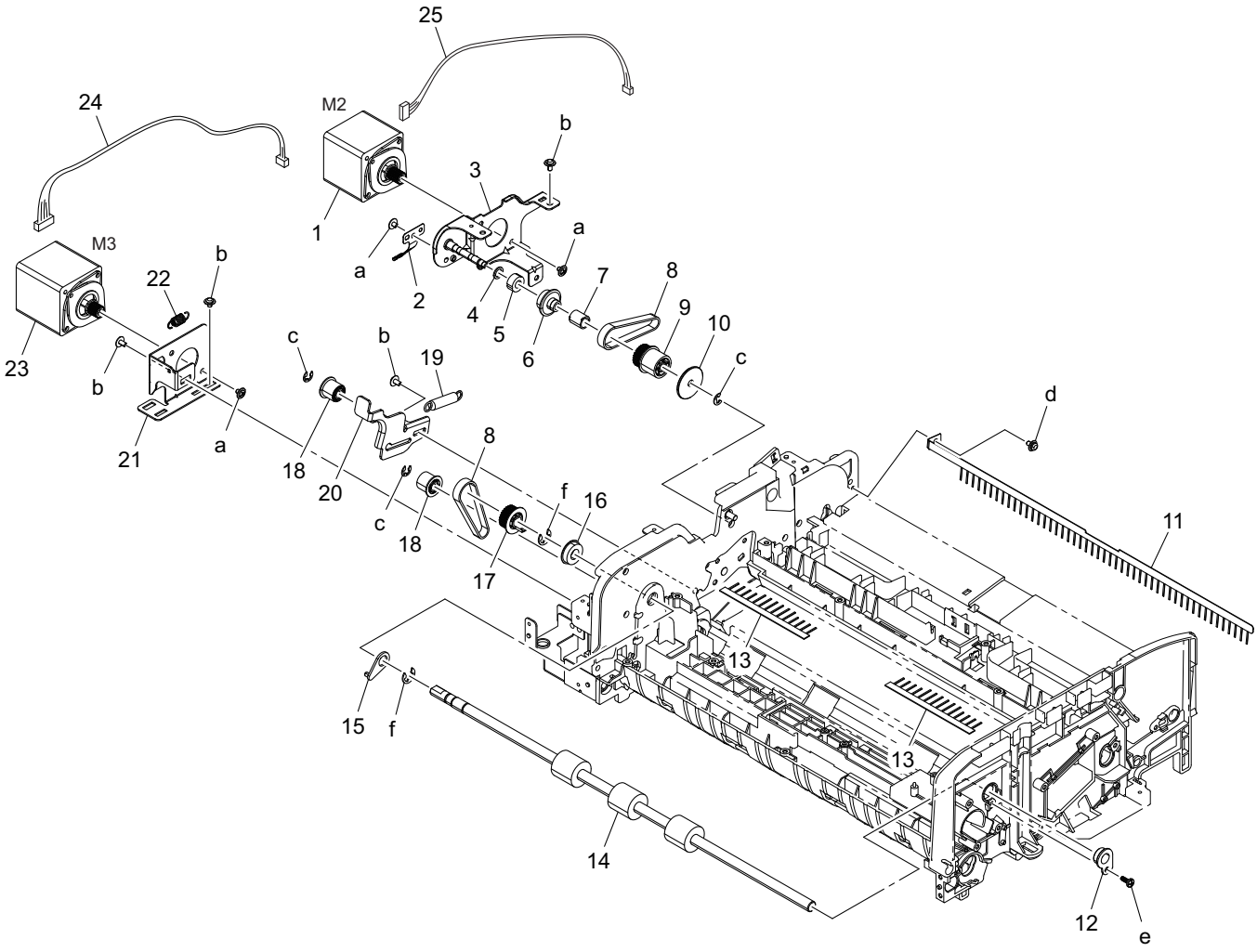

Page	Key	Parts No.	Description	Service Manual	Destinations	Class	Quantity
8	1	A3CFPP5S00	Motor	Document feed motor (M2)		C	1
8	2	A3CFPP2C00	Plate Spring			D	1
8	3	A3CEPP2H01	Bracket			D	1
8	4	A3CFPP3R00	Washer			C	1
8	5	A143PP9300	BEARING			C	1
8	6	A3CFPP3D01	Pulley			C	1
8	7	A3CFPP3P01	Pressure Spring			C	1
8	8	A3CEPP2P00	Timing Belt			C	2
8	9	A3CFPP3C00	Pulley			C	1
8	10	A3CFPP3900	Flange			C	1
8	11	A3CEPP1G01	Neuralizing Brush			C	1
8	12	A3CF103400	Bushing			C	1
8	13	A143PP1X00	Neuralizing Brush			C	2
8	14	A3CEPP1500	Roller			C	1
8	15	A3CFPP2E00	Bushing			D	1
8	16	A143PP1M00	Ball Bearing			C	1
8	17	A3CEPP2K00	Pulley			C	1
8	18	A3CEPP2Q00	Pulley			C	2
8	19	A3CEPP2F01	Tension Spring			C	1
8	20	A3CEPP2S00	Bracket			D	1
8	21	A3CEPP2J01	Bracket			D	1
8	22	A3CEPP2N00	Tension Spring			C	1
8	23	A3CEPP4B00	Motor	Registration motor (M3)		C	1
8	24	A3CEPP4N00	Wire Harness Assy			D	1
8	25	A3CEPP4P00	Wire Harness Assy			D	1

8	a	A143PP7N00	Screw			C	
8	b	A143PP7M00	Screw			C	
8	c	A143PP0Q00	Retaining Ring			C	
8	d	A3CFPP2Y01	Screw			C	
8	e	A143PP0A00	Screw			C	
8	f	A143PP0P00	Retaining Ring			C	

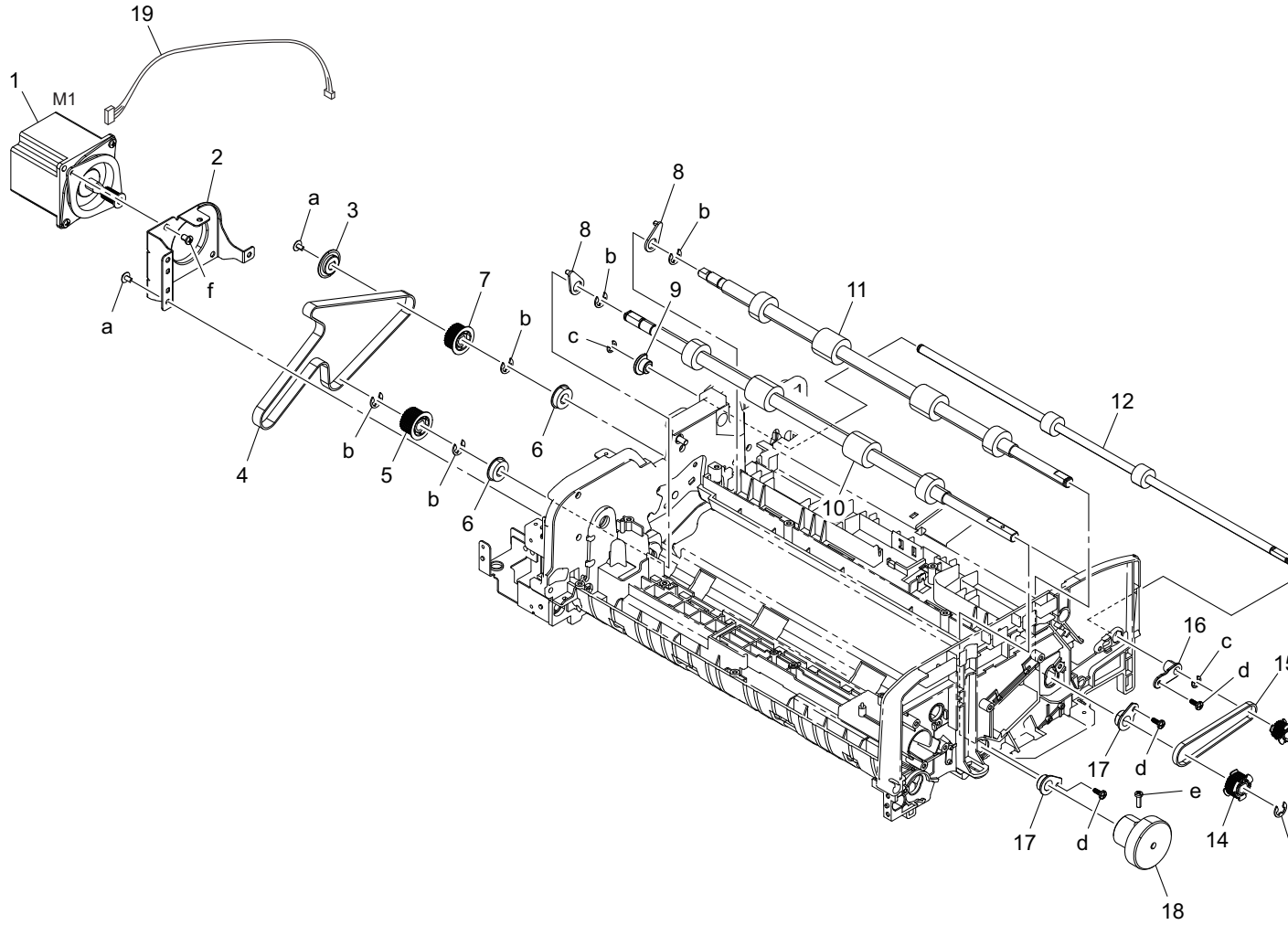

Page	Key	Parts No.	Description	Service Manual	Destinations	Class	Quantity
9	1	A3CEPP4C00	Motor	Document reading motor (M1)		C	1
9	2	A3CEPP2G01	Bracket			D	1
9	3	A3CEPP2R00	Flange			C	1
9	4	A3CE213300	Timing belt			C	1
9	5	A3CFPP3J01	Pulley			C	1
9	6	A143PP1M00	Ball Bearing			C	2
9	7	A3CEPP2M00	Pulley			C	1
9	8	A3CFPP2E00	Bushing			D	2
9	9	A143PP4D02	Bushing			C	1
9	10	A3CFPP1E01	Roller			C	1
9	11	A3CEPP1F00	Roller			C	1
9	12	A3CEPP1400	Roller			C	1
9	13	A3CFPP3800	Pulley			C	1
9	14	A3CFPP3500	Pulley			C	1
9	15	A3CEPP2E00	Timing Belt			C	1
9	16	A3CFPP1J01	Bushing			C	1
9	17	A3CF103400	Bushing			C	2
9	18	A3CEPP1S02	Fly Wheel			D	1
9	19	A3CEPP4L00	Wire Harness Assy			D	1

9	a	A143PP7M00	Screw			C	
9	b	A143PP0P00	Retaining Ring			C	
9	c	A143PP0Q00	Retaining Ring			C	
9	d	A143PP0A00	Screw			C	
9	e	A3CFPP6E00	Screw			C	
9	f	A3CEPP5900	Screw			C	

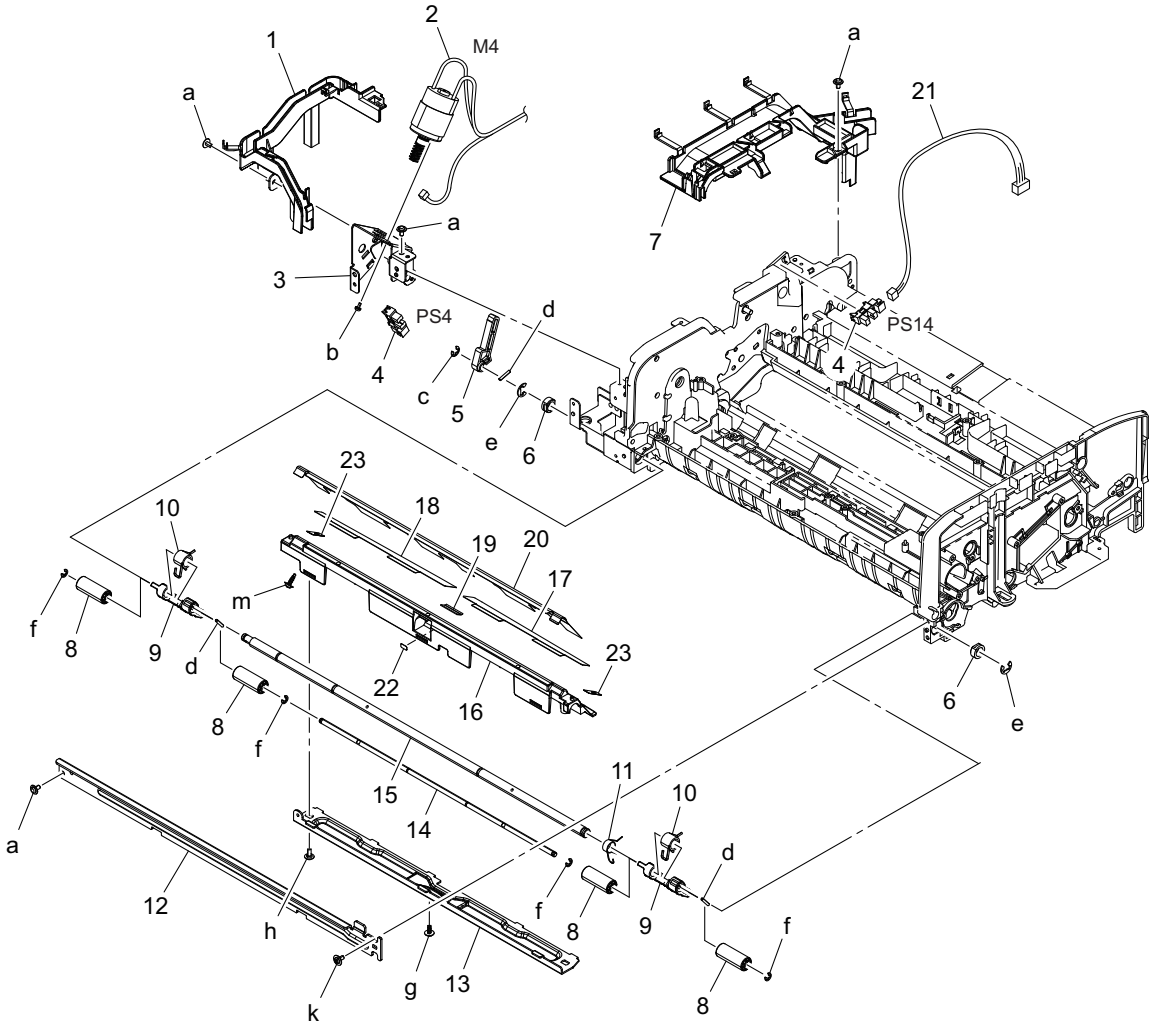

Page	Key	Parts No.	Description	Service Manual	Destinations	Class	Quantity
10	1	A3CEPP2B00	Guide			C	1
10	2	A3CEPP5700	Motor Assy	Reading roller release motor (M4)		C	1
10	3	A3CEPP2T01	Bracket			D	1
10	4	A108M50100	Photointerrupter	Reading roll position sensor (PS4) Upper door sensor (PS14)		B	2
10	5	A3CFPP3Y01	Lever			C	1
10	6	A3CFPP1K01	Bushing			C	2
10	7	A3CEPP2A01	Guide			C	1
10	8	A3CFPP4101	Roller			C	4
10	9	A3CFPP3V01	Arm			C	2
10	10	A3CFPP3X00	Torsion Spring			C	2
10	11	A3CFPP2X00	Torsion Spring			C	1
10	12	A3CFPP1401	Bracket			D	1
10	13	A3CFPP1300	Bracket			D	1
10	14	A3CFPP4000	Shaft			D	1
10	15	A3CFPP3U00	Shaft			D	1
10	16	A3CEPP1002	Guide			C	1
10	17	A3CFPP1102	Film			C	1
10	18	A3CFPP1202	Film			C	1

10	19	A3CFPP1P00	Cushion			C	1
10	20	A3CFPP2Q01	Film			C	1
10	21	A3CEPP4G00	Wire Harness Assy			D	1
10	22	A3CFPP6M00	Spacer			C	1
10	23	A3CFPP6N00	Spacer			C	2
10	a	A143PP7M00	Screw			C	
10	b	A143PP3M00	Screw			C	
10	c	A143PP0Q00	Retaining Ring			C	
10	d	A143PP3X00	Pin			C	
10	e	A143PP0P00	Retaining Ring			C	
10	f	A3CFPP5M00	Retaining Ring			C	
10	g	A3CFPP2G00	Screw			C	
10	h	A3CFPP2K00	Screw			C	
10	k	A3CFPP2F00	Shoulder Screw			D	
10	m	A3CFPP2V00	Screw			C	

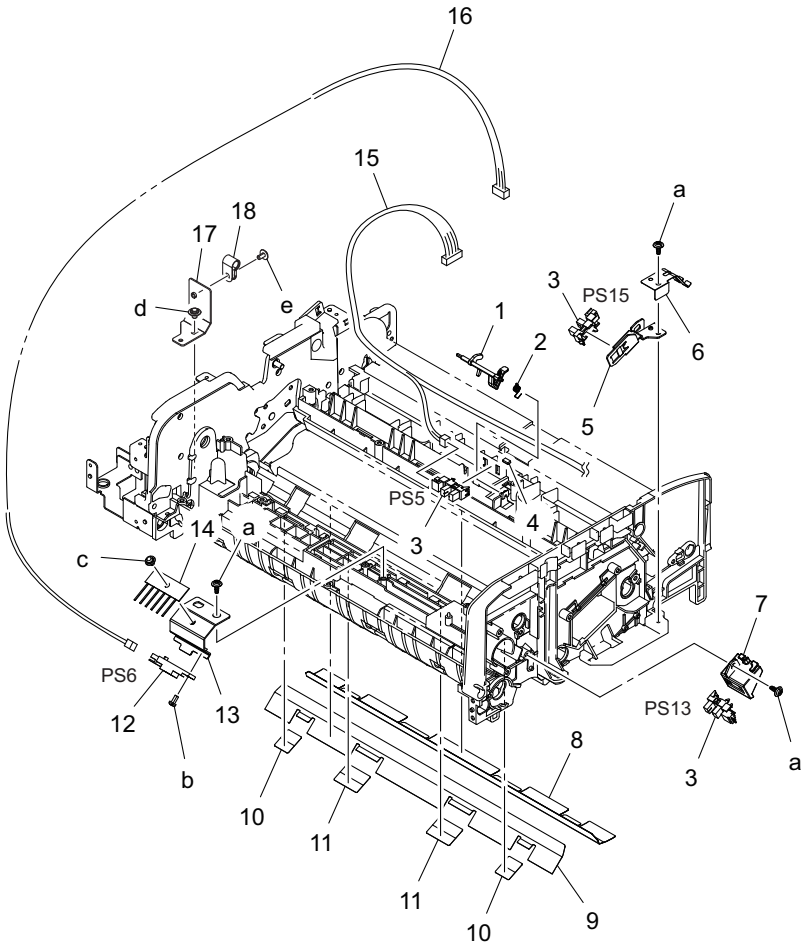

Page	Key	Parts No.	Description	Service Manual	Destinations	Class	Quantity
11	1	A3CEPP1300	Arm			C	1
11	2	A143PP1B00	Torsion Spring			C	1
11	3	A108M50100	Photointerrupter	Document exit sensor (PS5) Document reading glass cleaning sensor (PS13) CIS cover sensor (PS15)		B	3
11	4	A143PP1Y00	Sponge			C	1
11	5	A3CEPP3E01	Holder			C	1
11	6	A3CEPP1R00	Plate Spring			C	1
11	7	A3CFPP2B00	Holder			D	1
11	8	A3CEPP1L01	Film			C	1

11	9	A3CEPP1K01	Film			C	1
11	10	A143PP4G01	Film			C	2
11	11	A143PP4F01	Film			C	2
11	12	A143PP7900	Solid State Switch	Document reading sensor (PS6)		B	1
11	13	A3CFPP1901	Bracket			D	1
11	14	A3CFPP2H01	Neuralizing Brush			C	1
11	15	A3CEPP4H00	Wire Harness Assy			D	1
11	16	A3CEPP4F00	Wire Harness Assy			D	1
11	17	A3CEPP5300	Bracket			D	1
11	18	A3CEPP2000	Clamp			C	1
11	a	A3CFPP2G00	Screw			C	
11	b	A143PP0D00	Screw			C	
11	c	A3CFPP2Y01	Screw			C	
11	d	A143PP7N00	Screw			C	
11	e	A143PP7M00	Screw			C	

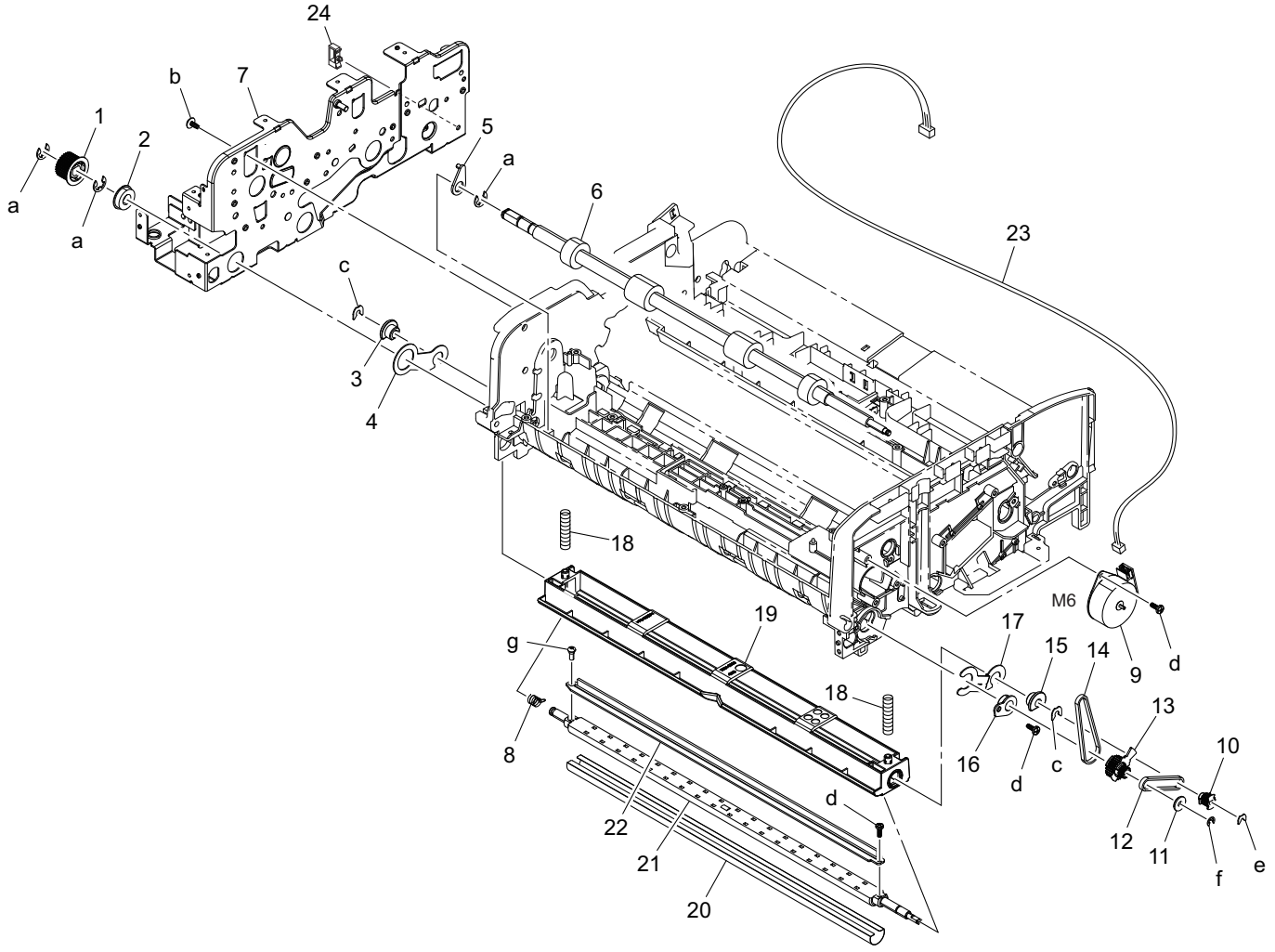

Page	Key	Parts No.	Description	Service Manual	Destinations	Class	Quantity
12	1	A3CFPP3J01	Pulley			C	1
12	2	A143PP1M00	Ball Bearing			C	1
12	3	A143PP4D02	Bushing			C	1
12	4	A3CFPP4400	Arm			C	1
12	5	A3CFPP2E00	Bushing			D	1
12	6	A3CFPP1G00	Roller			C	1
12	7	A3CEPP1203	Frame Assy			C	1
12	8	A3CFPP4F00	Tension Spring			C	1
12	9	A3CFPP5R00	Motor	Document reading glass cleaning motor (M6)		C	1

12	10	A3CFPP4800	Pulley			C	1
12	11	A143PP4H01	Flange			D	1
12	12	A3CFPP4900	Timing Belt			C	1
12	13	A3CFPP4700	Pulley			C	1
12	14	A3CFPP4C00	Timing Belt			C	1
12	15	A3CFPP4A00	Bushing			C	1
12	16	A3CF103400	Bushing			C	1
12	17	A3CFPP4300	Arm			C	1
12	18	A3CEPP5000	Pressure Spring			C	2
12	19	A3CFPP4202	Cover			D	1
12	20	A3CEPP3301	Sheet			C	1
12	21	A3CFPP4600	Shaft			D	1
12	22	A3CFPP4500	Brush			C	1
12	23	A3CEPP4K00	Wire Harness Assy			D	1
12	24	A3CEPP4X00	Clamp			C	1
12	a	A143PP0P00	Retaining Ring			C	
12	b	A3CFPP2G00	Screw			C	
12	c	A143PP5501	Retaining Ring			C	
12	d	A143PP0A00	Screw			C	
12	e	A3CFPP4D00	Retaining Ring			C	
12	f	A3CFPP5M00	Retaining Ring			C	
12	g	A3CFPP4E00	Screw			C	

3.5 CIS SECTION

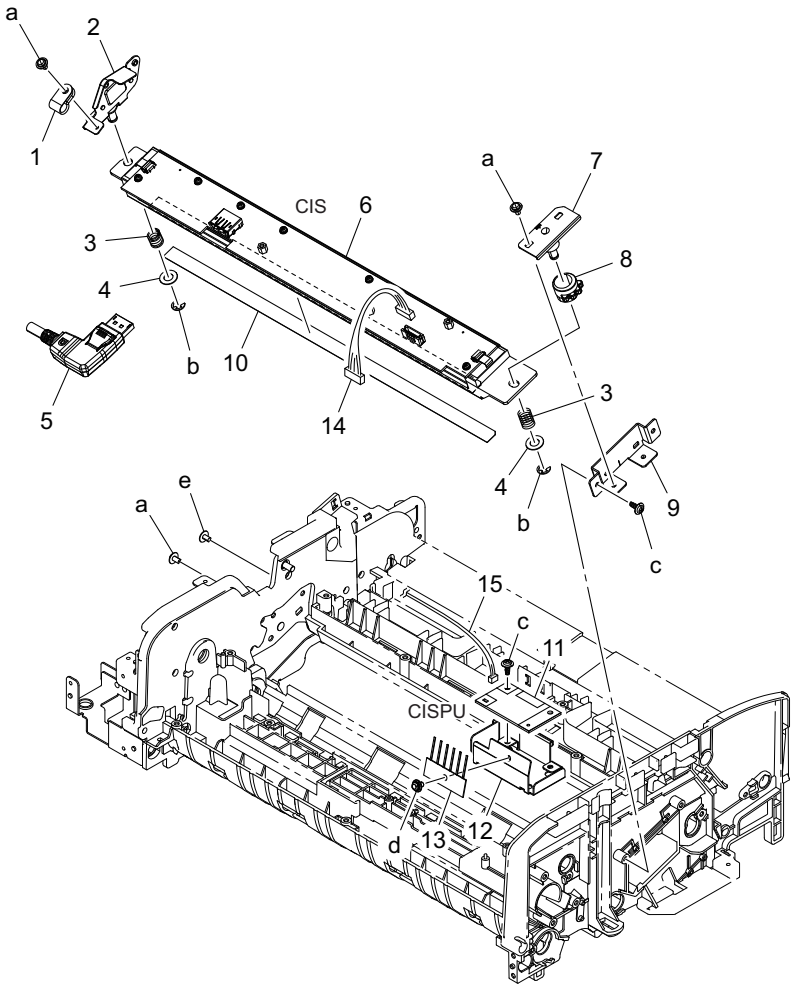

Page	Key	Parts No.	Description	Service Manual	Destinations	Class	Quantity
13	1	A3CEPP2900	Clamp			C	1

13	2	A3CEPP4100	Bracket			D	1
13	3	A3CEPP3U00	Pressure Spring			C	2
13	4	A3CFPP2S00	Washer			C	2
13	5	A3CEN11700	ADF Cable			D	1
13	6	A3CEM70000	CIS	CIS module (CIS)		I	1
13	7	A3CEPP4000	Bracket			D	1
13	8	A3CEPP3T00	Adjustment Wheel			C	1
13	9	A3CEPP1H00	Bracket			D	1
13	10	A3CEPP3V00	Film			C	1
13	11	A3CEPP4Y00	PCB Board Assy	CIS power supply (CISPU)		I	1
13	12	A3CEPP1J00	Bracket			D	1
13	13	A3CFPP2H01	Neuralizing Brush			C	1
13	14	A3CEPP4V00	Wire Harness Assy			D	1
13	15	A3CEPP4U00	Wire Harness Assy			D	1
13	a	A143PP7M00	Screw			C	
13	b	A143PP0Q00	Retaining Ring			C	
13	c	A3CFPP2G00	Screw			C	
13	d	A3CFPP2Y01	Screw			C	
13	e	A143PP0E00	Screw			C	

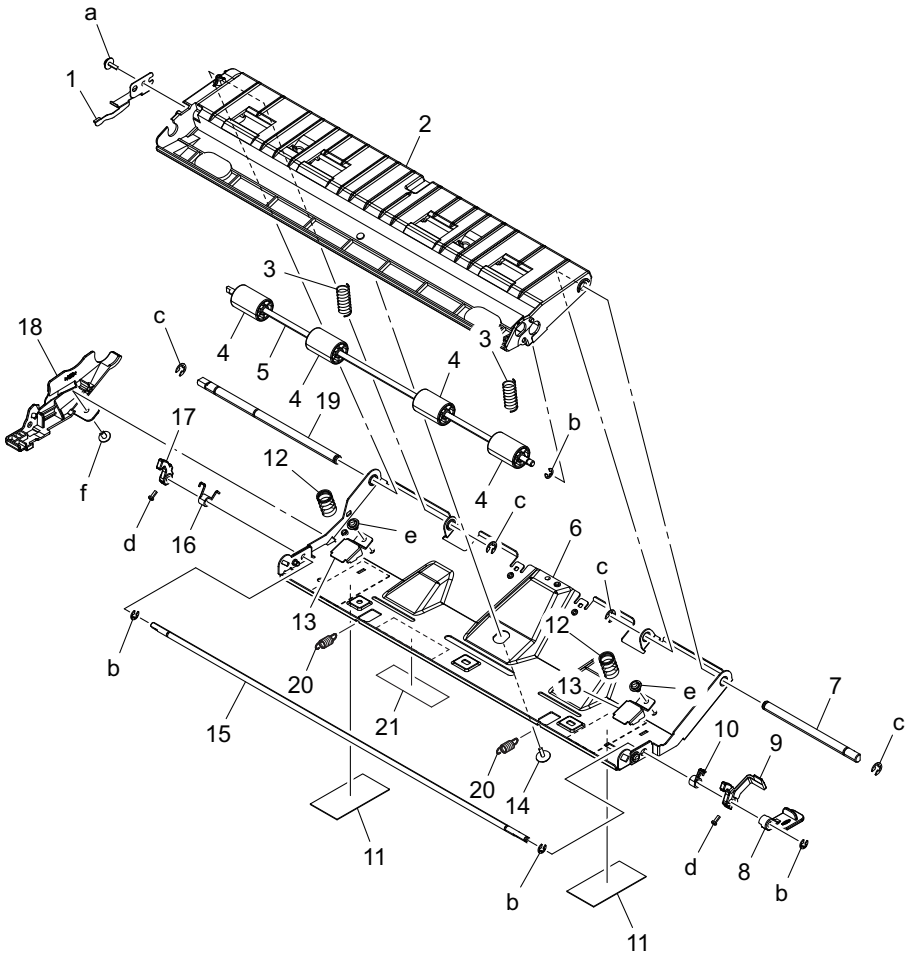

Page	Key	Parts No.	Description	Service Manual	Destinations	Class	Quantity
14	1	A3CEPP3800	Plate Spring			C	1
14	2	A3CEPP3701	Cover			C	1
14	3	A3CEPP3B00	Pressure Spring			C	2
14	4	A3CFPP4T01	Roller			C	4
14	5	A3CEPP3A00	Shaft			D	1
14	6	A3CEPP3D01	Bracket			D	1

14	7	A3CEPP3F00	Shaft			D	1
14	8	A3CEPP3N01	Lever			C	1
14	9	A3CEPP3L00	Lever			C	1
14	10	A3CEPP3Q00	Torsion Spring			C	1
14	11	A3CEPP3X00	Sheet			C	2
14	12	A3CEPP3C00	Pressure Spring			C	2
14	13	A3CEPP1Q00	Mounting Plate			D	2
14	14	A3CEPP5100	Screw			C	1
14	15	A3CEPP3P00	Shaft			D	1
14	16	A3CEPP3R00	Torsion Spring			C	1
14	17	A3CEPP3M00	Lever			C	1
14	18	A3CEPP3S00	Cover			C	1
14	19	A3CEPP3G00	Shaft			D	1
14	20	A3CEPP1C00	Tension Spring			C	2
14	21	A3CEPP5A00	Label			C	1
14	a	A3CFPP2G00	Screw			C	
14	b	A3CFPP5M00	Retaining Ring			C	
14	c	A143PP0Q00	Retaining Ring			C	
14	d	A3CEPP1P00	Screw			C	
14	e	A143PP0E00	Screw			C	
14	f	A143PP7M00	Screw			C	

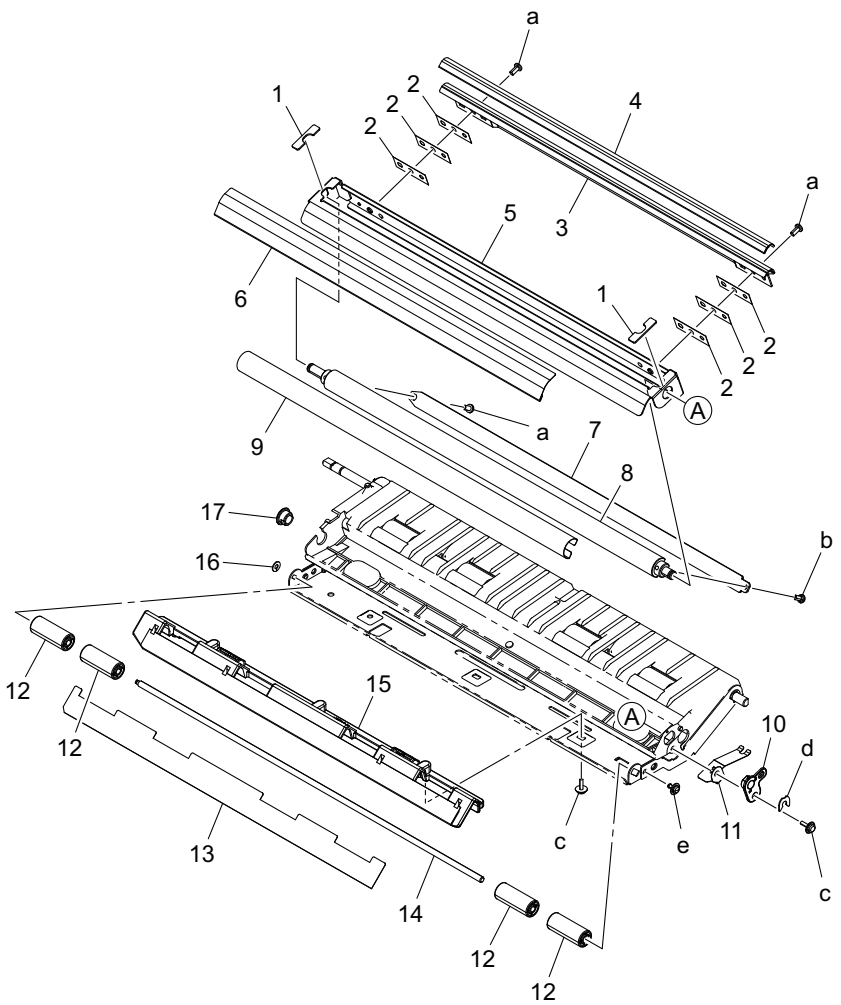

Page	Key	Parts No.	Description	Service Manual	Destinations	Class	Quantity
15	1	A3CEPP4301	Spacer			C	2
15	2	A3CEPP2800	Film			C	6
15	3	A3CEPP2700	Mounting Plate			D	1
15	4	A3CEPP3600	Film			C	1

15	5	A3CEPP3401	Mounting Plate			D	1
15	6	A3CEPP3501	Film			C	1
15	7	A3CFPP4500	Brush			C	1
15	8	A3CEPP4201	Shaft			D	1
15	9	A3CEPP3301	Sheet			C	1
15	10	A3CEPP2X01	Bushing			C	1
15	11	A3CEPP3900	Plate Spring			C	1
15	12	A3CEPP3H01	Roll			C	4
15	13	A3CEPP1N00	Film			C	1
15	14	A3CEPP3K00	Shaft			D	1
15	15	A3CEPP3J00	Guide			C	1
15	16	A143PP1S00	Washer			C	1
15	17	A3CEPP2Y00	Bushing			C	1
15	a	A143PP0D00	Screw			C	
15	b	A3CEPP2500	Screw			C	
15	c	A3CFPP2G00	Screw			C	
15	d	A143PP5501	Retaining Ring			C	
15	e	A143PP0E00	Screw			C	

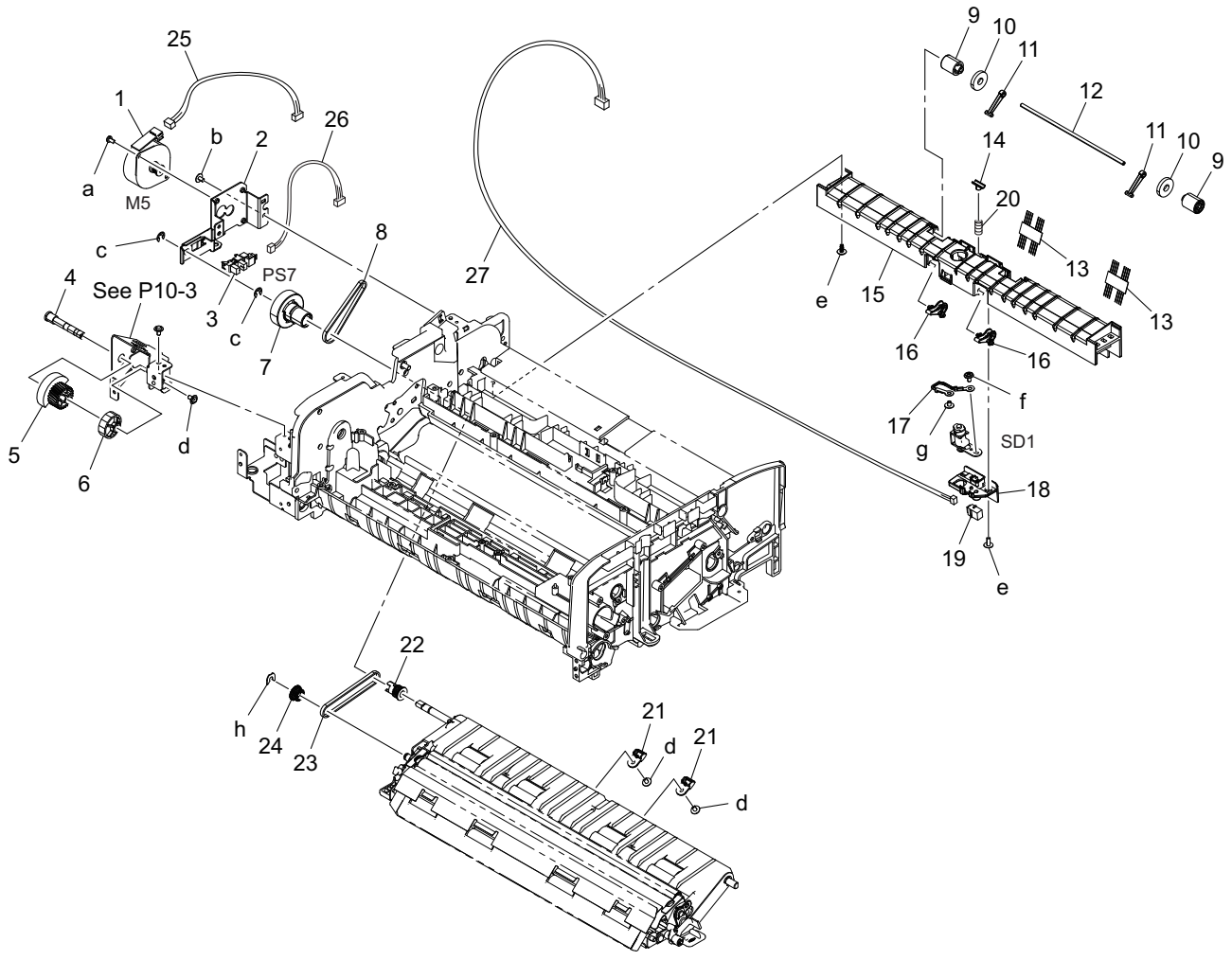

Page	Key	Parts No.	Description	Service Manual	Destinations	Class	Quantity
16	1	A3CEPP4A01	Motor	CIS cleaning motor (M5)		C	1
16	2	A3CEPP2V00	Bracket			D	1
16	3	A108M50100	Photointerrupter			B	1
16	4	A3CFPP3M00	Shaft			D	1
16	5	A143PP3P01	Gear			C	1
16	6	A3CFPP3T00	Cam			C	1
16	7	A3CEPP3000	Pulley	CIS cleaning sensor (PS7)		C	1

16	8	A3CFPP4C00	Timing Belt			C	1
16	9	A3CEPP1701	Roll			C	2
16	10	A143PP8600	Washer			C	2
16	11	A3CEPP1Y00	Crank			C	2
16	12	A3CEPP1U00	Shaft			D	1
16	13	A3CEPP2601	Brush			C	2
16	14	A3CEPP1T01	Holder			C	1
16	15	A3CEPP1E02	Guide			C	1
16	16	A3CEPP1X01	Lever			C	2
16	17	A143PP8D01	Wire Harness Assy			D	1
16	18	A3CEPP2403	Holder			C	1
16	19	A143PP8F00	Wire Harness Assy			D	1
16	20	A3CEPP1A00	Pressure Spring			C	1
16	21	A3CEPP1V01	Cam			C	2
16	22	A3CEPP3200	Pulley			C	1
16	23	A3CEPP2U00	Timing Belt			C	1
16	24	A3CEPP3101	Pulley			C	1
16	25	A3CEPP4R00	Wire Harness Assy			D	1
16	26	A3CEPP4S00	Wire Harness Assy			D	1
16	27	A3CEPP4M01	Wire Harness Assy			D	1
16	a	A143PP0D00	Screw			C	
16	b	A143PP0E00	Screw			C	
16	c	A143PP0Q00	Retaining Ring			C	
16	d	A143PP7M00	Screw			C	
16	e	A3CFPP2G00	Screw			C	
16	f	A143PP0B00	Screw			C	
16	g	A143PP7N00	Screw			C	
16	h	A143PP5501	Retaining Ring			C	

3.6 WIRIING ACCESSORIES AND JIGS

1 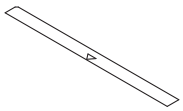	6	11	16	21	26	31	36
2	7	12	17	22	27	32	37
3	8	13	18	23	28	33	38
4	9	14	19	24	29	34	39
5	10	15	20	25	30	35	40

Page	Key	Parts No.	Description	Service Manual	Destinations	Class	Quantity
17	1	9J06PJG100	JIG			S	1

3.7 ACCESSORY PARTS

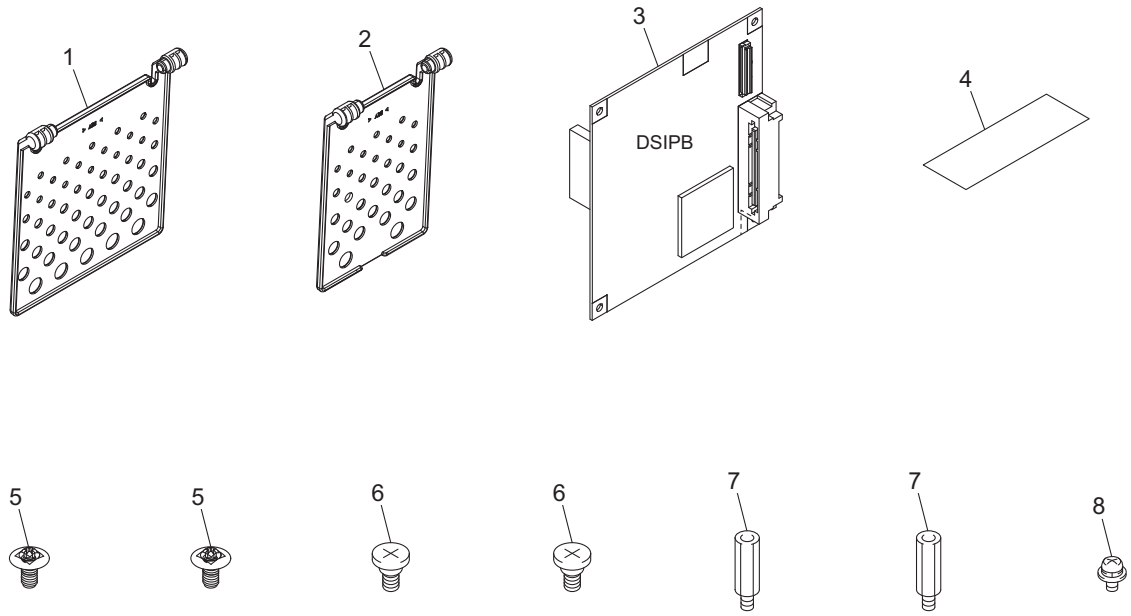

Page	Key	Parts No.	Description	Service Manual	Destinations	Class	Quantity
18	1	A3CF113900	Hinge Cover Left			C	1
18	2	A3CF116400	Hinge Cover Right			C	1
18	3	A161H02A00	PWB assembly(PWB-DS ASSY)			I	1
18	4	A161N15500	Interface Flatcable			C	1
18	5	A143114600	Screw			C	2
18	6	A3CF116100	Screw_two step			C	2
18	7	A4MG130900	Shoulder screw			D	2
18	8	V116030803	Screw			V	1

3.8 MAINTENANCE LIST

- The items with no Page/Key numbers are not handled as spare parts.

No.	Section	PM Parts Description	Maintenance Cycle (K=1,000)		Parts No.	Destinations	Page/Key	Note
			QTY	Replace				
1	Paper Take-up Section	Pick-up roller	2	200K	A143PP5200		P6-13	*1 *2
2		Feed roller	1	200K	A143563100		P6-26	*1 *2
3		Separation roller	1	200K	A3CFPP4H00		P7-3	*1 *2

- *1: Actual durable cycle (life counter value)
- *2: Replace those parts at the same time.

3.9 DESTINATION

Destination No.		Destinations	V	Hz	Model No.
A	A1	JAPAN	100	50/60	A3CEWY1
	A2	JAPAN			

B		USA, CANADA		120	60	A3CEWY1
C		EUROPEAN TYPE		220-240	50/60	A3CEWY1
D	D1	S.E ASIA TYPE	THAILAND,SRI LANKA,SINGAPORE,MALAYSIA,HONGKONG, PAKISTAN,INDIA,BANGLADESH,INDONESIA	220-240	50/60	A3CEWY1
	D3	OCEAINA TYPE	AUSTRALIA,NEW ZEALAND	220-240	50/60	A3CEWY1
E		PHILIPPINES		220-240	50/60	A3CEWY1
F	F1	SAUDI ARABIA				
	F2	SAUDI ARABIA		220-240	50/60	A3CEWY1
G	G1	C.S AMERICA		220-240	50/60	A3CEWY1
	G2	C.S AMERICA		120	60	A3CEWY1
H		TAIWAN		110	60	A3CEWY1
I		JORDAN, LEBANON, SYRIA, SOUTH AFRICA, IRAQ, IRAN, N.YEMEN, CAMEROON, UAE, BAHRAIN, OMAN, QATAR, KUWAIT, KENYA, TUNISIA, IVORY COAST, MOROCCO		220-240	50/60	A3CEWY1
J		CHINA		220-240	50/60	A3CEWY1
K		KOREA		220-240	50/60	A3CEWY1

4. OTHER OPTION (OC-511)

4.1 OC-511

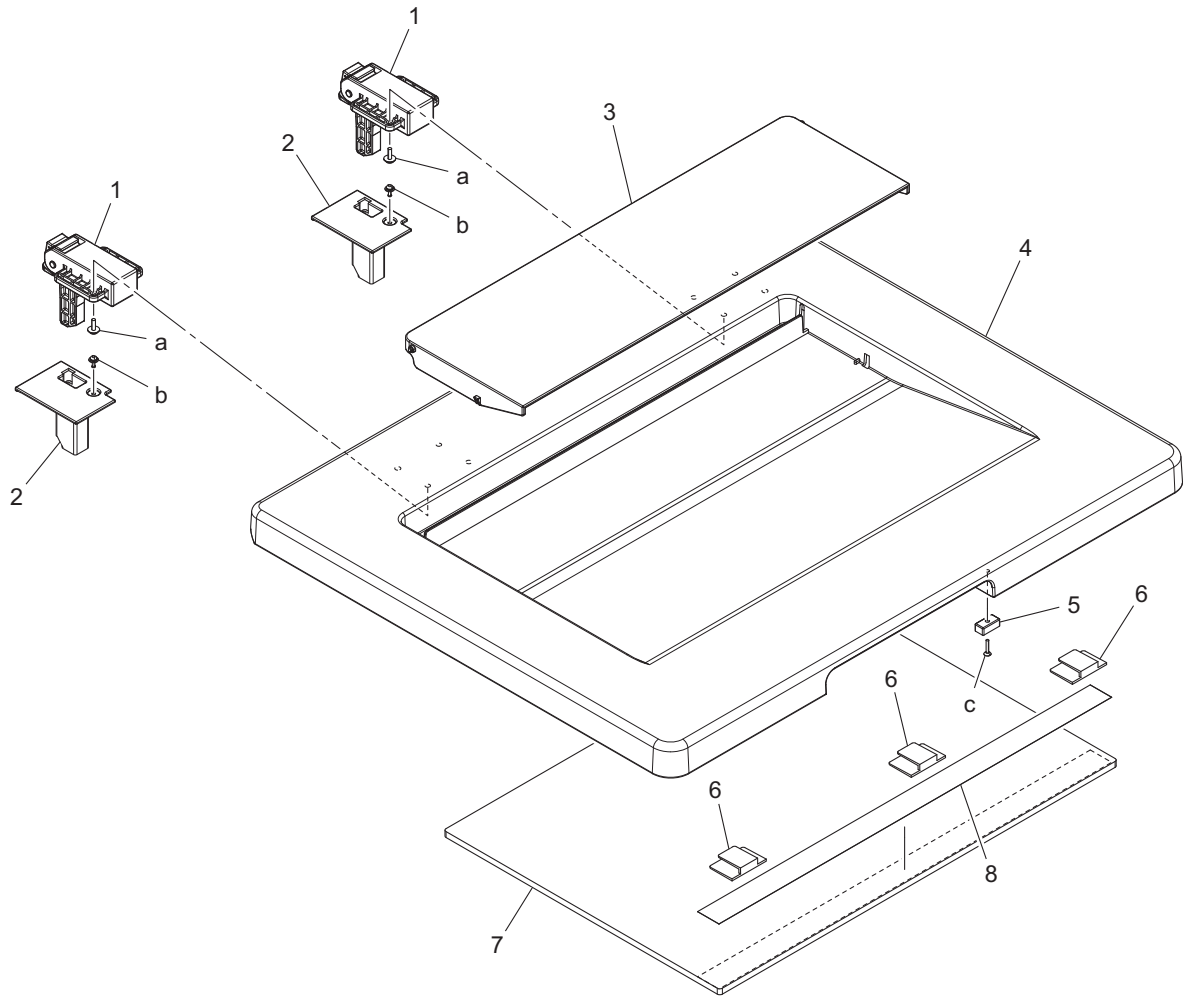

Page	Key	Parts No.	Description	Service Manual	Destinations	Class	Quantity
1	1	A3PM173200	Hinge			C	2
1	2	A3PM173301	Read Cover			C	2
1	3	A02E169612	Holder			C	1
1	4	A3PM173101	Cover			C	1
1	5	9326282011	MAGNET			D	1
1	6	1139170302	SLIDER			C	3
1	7	1139170414	PAD			C	1
1	8	1139170601	SEAL			C	1
1	a	V153041603	screw			V	
1	b	V116030804	Screw			V	
1	c	V147031403	screw			V	

4.2 DESTINATION

Destination No.		Destinations		V	Hz	Model No.
A	A1	JAPAN		100	50/60	A3PM-WY1
	A2	JAPAN				
B		USA, CANADA		120	60	A3PM-WY1
C		EUROPEAN TYPE		220-240	50/60	A3PM-WY1
D	D1	S.E ASIA TYPE	THAILAND,SRI LANKA,SINGAPORE,MALAYSIA,HONGKONG, PAKISTAN,INDIA,BANGLADESH,INDONESIA	220-240	50/60	A3PM-WY1

	D3	OCEAINA TYPE	AUSTRALIA,NEW ZEALAND	220-240	50/60	A3PM-WY1
E		PHILIPPINES		220-240	50/60	A3PM-WY1
F	F1	SAUDI ARABIA				
	F2	SAUDI ARABIA		220-240	50/60	A3PM-WY1
G	G1	C.S AMERICA		220-240	50/60	A3PM-WY1
	G2	C.S AMERICA		120	60	A3PM-WY1
H		TAIWAN		110	60	A3PM-WY1
I		JORDAN, LEBANON, SYRIA, SOUTH AFRICA, IRAQ, IRAN, N.YEMEN, CAMEROON, UAE, BAHRAIN, OMAN, QATAR, KUWAIT, KENYA, TUNISIA, IVORY COAST, MOROCCO		220-240	50/60	A3PM-WY1
J		CHINA		220-240	50/60	A3PM-WY1
K		KOREA		220-240	50/60	A3PM-WY1

5. SORTER/FINISHER (FS-533)

5.1 FRAME SECTION

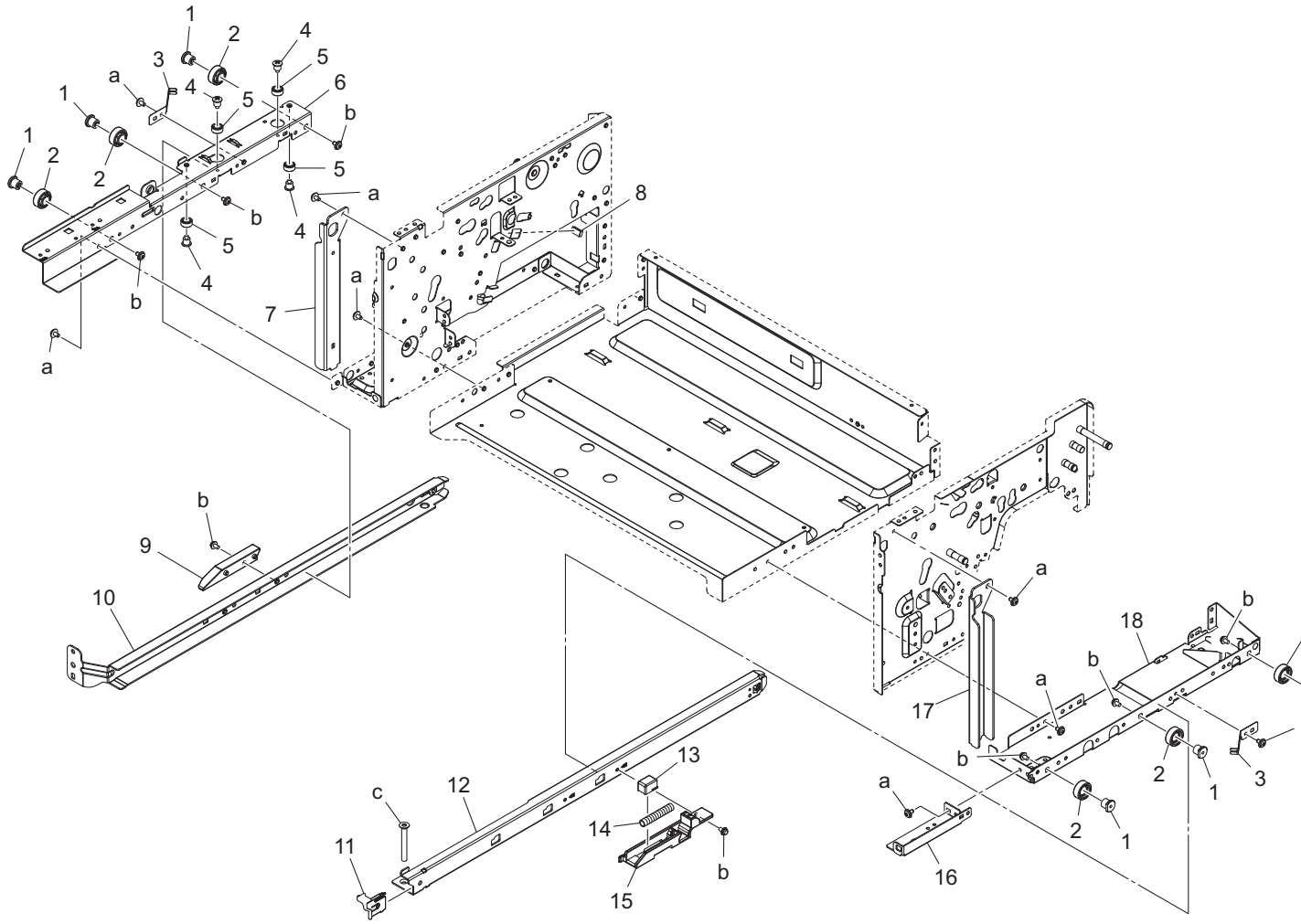

Page	Key	Parts No.	Description	Service Manual	Destinations	Class	Quantity
1	1	A2YUPPS100	Shaft			C	6
1	2	A2YUPPR700	Roll			C	6
1	3	A2YUPP0801	Plate Spring			D	2
1	4	A2YUPPS200	Shoulder Screw			D	4
1	5	A2YUPPR800	Roll			C	4
1	6	A2YUPP0300	Mounting Plate			D	1
1	7	A2YUPP1101	Rail			D	1
1	8	A2YUPP4700	Cushion			C	1
1	9	A2YUPP5400	Holder			D	1
1	10	A2YUPP0701	Rail			D	1
1	11	A2YUPP6201	Cover			D	1
1	12	A2YUPP0601	Rail			D	1
1	13	A0U7PP9K01	HOLDER			C	1
1	14	A0U7PPAX01	Pressing Spring			C	1
1	15	A2YUPP5301	Holder			D	1
1	16	A2YUPP0900	Screw			D	1
1	17	A2YUPP1001	Rail			D	1
1	18	A2YUPP0200	Mounting Plate			D	1
1	a	A0U7PP1400	SCREW			D	
1	b	A2YUPPV800	Screw			D	
1	c	A2YUPPU000	Screw			D	

5.2 EXTERNAL PARTS

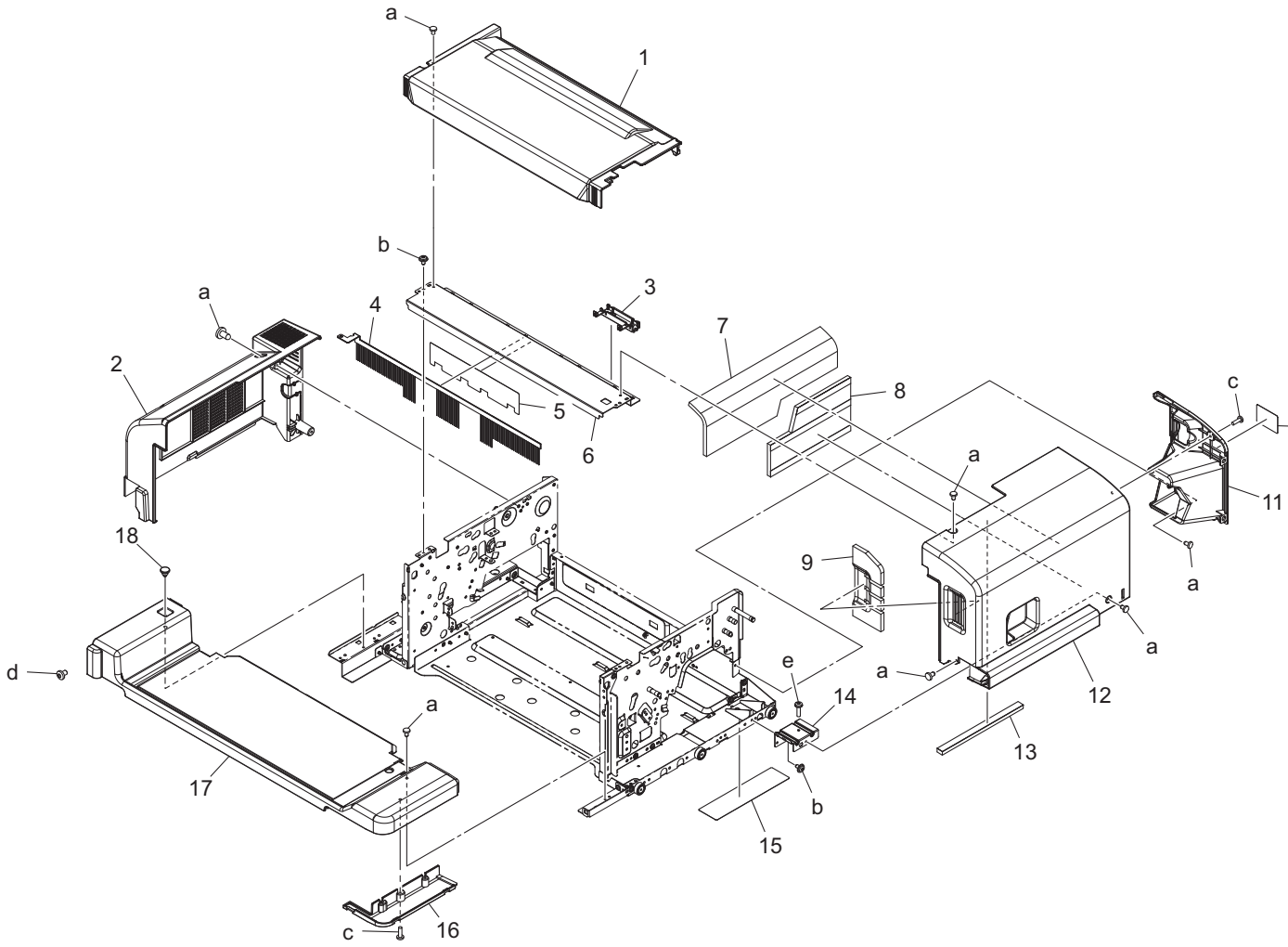

Page	Key	Parts No.	Description	Service Manual	Destinations	Class	Quantity
2	1	A2YUPP5801	Cover/Upper			C	1
2	2	A2YUPP5701	Cover/Rear			C	1
2	3	A2YUPPC700	Guide			D	1
2	4	A2YUPP4002	Neutralizing Brush			C	1
2	5	A2YUPPC900	Seal			D	1
2	6	A2YUPP0501	Mounting Plate			D	1
2	7	A2YUPP7900	Cushion			C	1
2	8	A2YUPP4400	Cushion			C	1
2	9	A2YUPP8100	Cushion			C	1
2	10	A2YUPPE500	Label			C	1
2	11	A2YUPP6000	Cover			C	1
2	12	A2YUPP5600	Cover/Front			C	1
2	13	A2YUPP8000	Cushion			C	1
2	14	A2YUPP2001	Mounting Plate			D	1
2	15	A2YUPPE600	Label			D	1
2	16	A2YUPP7200	Cover			C	1
2	17	A2YUPP6101	Cover			C	1
2	18	A0U7PP8S01	Shoulder Screw			D	1
2	a	A0U7PPAH00	Screw			D	
2	b	A0U7PP1400	SCREW			D	
2	c	A2YUPPV700	Screw			D	
2	d	A0U7PP1600	SCREW			D	
2	e	A2YUPPW500	Screw			D	

5.3 ELEVATE SECTION

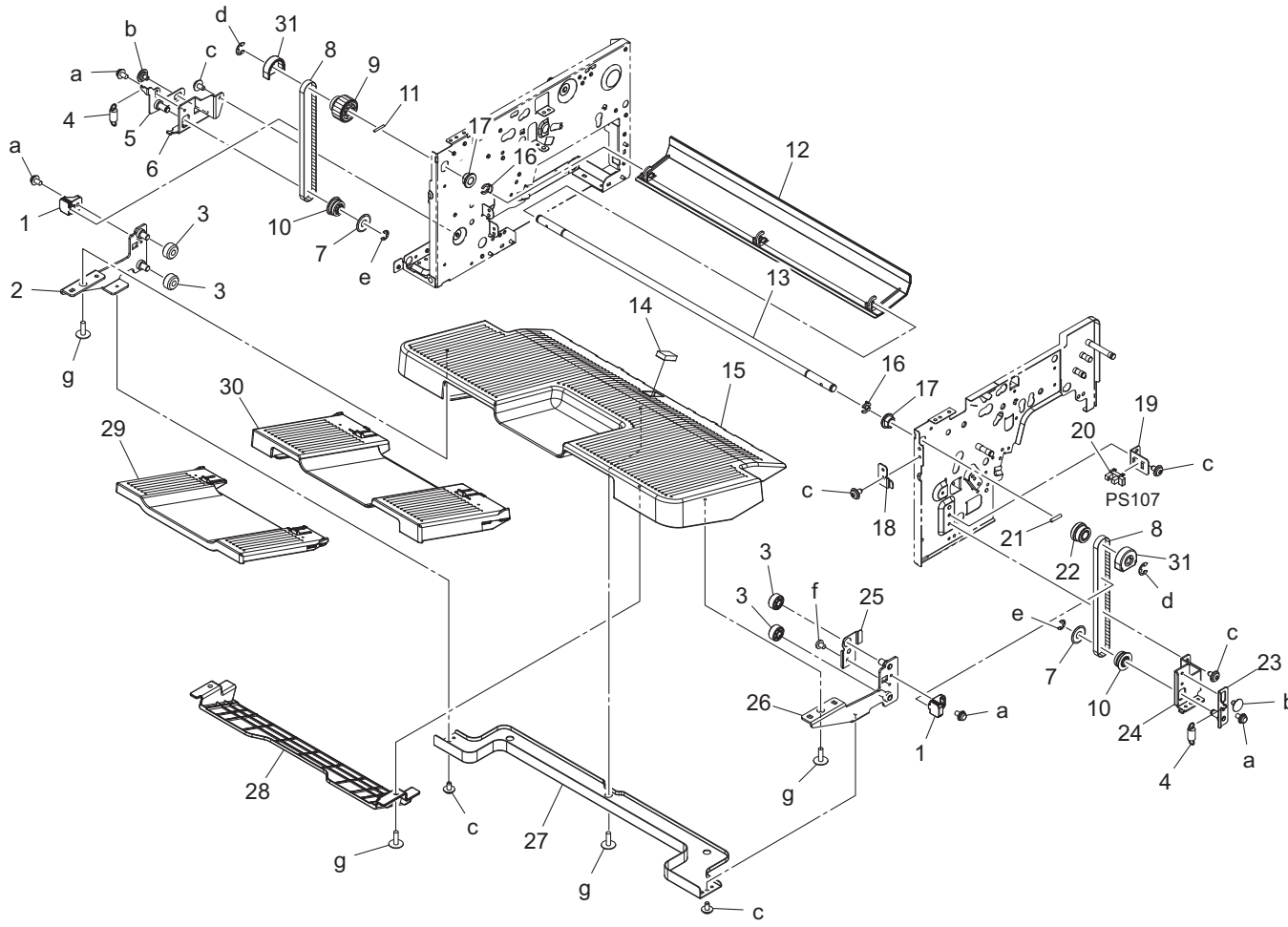

Page	Key	Parts No.	Description	Service Manual	Destinations	Class	Quantity
3	1	A2YUPP7400	Holder			D	2
3	2	A2YUPPF400	Mounting Plate			D	1
3	3	A2YUPPR600	Roller			C	4
3	4	A2YUPPP000	Tension Spring			C	2
3	5	A2YUPPF600	Mounting Plate			D	1
3	6	A2YUPP1200	Mounting Plate			D	1
3	7	4583439601	FLANGE			C	2
3	8	A2YUPPV200	Timing Belt			C	2
3	9	A2YUPPQ501	Gear 18/24T			C	1
3	10	A2YUPPQ700	Pulley/18T			C	2
3	11	A2YUPPU400	Pin			D	1
3	12	A2YUPP7300	Cover			D	1
3	13	A2YUPPC501	Shaft			D	1
3	14	A2YUPP8200	Cushion			C	1
3	15	A2YUPP6300	Tray			C	1
3	16	A0U7PP0X00	STOPPER RING			C	2
3	17	A0U7PP1300	BUSHING			C	2
3	18	A2YUPP3600	Plate			D	1
3	19	A2YUPP1300	Mounting Plate			D	1
3	20	A2YUPPT800	Photointerrupter	Paper exit tray home sensor (PS107)		I	1
3	21	A2YUPPU500	Pin			D	1
3	22	A2YUPPW000	Pulley/18T			C	1
3	23	A2YUPPF500	Mounting Plate			D	1

3	24	A2YUPP1600	Mounting Plate			D	1
3	25	A2YUPP4501	Plate			D	1
3	26	A2YUPPF300	Mounting Plate			D	1
3	27	A2YUPP1500	Mounting Plate			D	1
3	28	A2YUPP7100	Holder			D	1
3	29	A2YUPP6501	Tray			C	1
3	30	A2YUPP6401	Tray			C	1
3	31	A2YUPPV900	Cover/Pulley			C	2
3	a	A2YUPPV800	Screw			D	
3	b	A2YUPPT200	Screw			D	
3	c	A0U7PP1400	SCREW			D	
3	d	A0U7PP0F00	E RING			D	
3	e	A0U7PP0E00	E RING			D	
3	f	A0U7PP0100	SCREW			D	
3	g	A2YUPPT000	Screw			D	

5.4 PAPER FEED/TRANSPORT SECTION

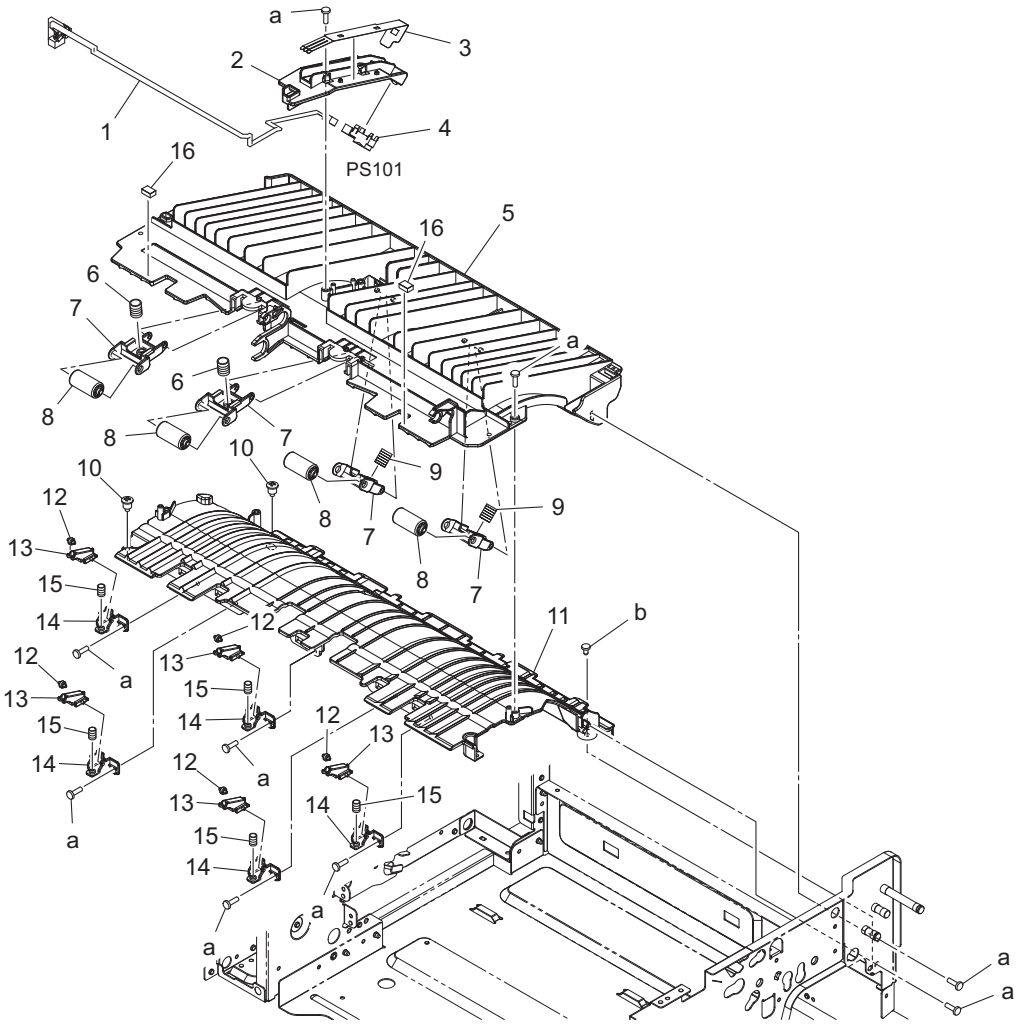

Page	Key	Parts No.	Description	Service Manual	Destinations	Class	Quantity
4	1	A2YUPPH500	Harness			D	1
4	2	A2YUPPC301	Guide			D	1
4	3	A2YUPPC600	Plate Spring			D	1
4	4	A2YUPPS300	Photoreflector	Paper feed sensor (PS101)		I	1
4	5	A2YUPPA302	Guide			D	1
4	6	A2YUPPP200	Pressing Spring			C	2
4	7	A2YUPPA900	Holder			D	4
4	8	A2YUPPS000	Roller			C	4

4	9	A2YUPPP100	Pressing Spring			C	2
4	10	A2YUPPS200	Shoulder Screw			D	2
4	11	A2YUPPA402	Guide			D	1
4	12	A0U7PP4A00	ROLLER			C	5
4	13	A2YUPPB100	Holder			D	5
4	14	A2YUPPB000	Holder			D	5
4	15	A2YUPPP700	Pressing Spring			C	5
4	16	A2YUPP4600	Cushion			C	2
4	a	A2YUPPV700	Screw			D	
4	b	A0U7PPAH00	Screw			D	

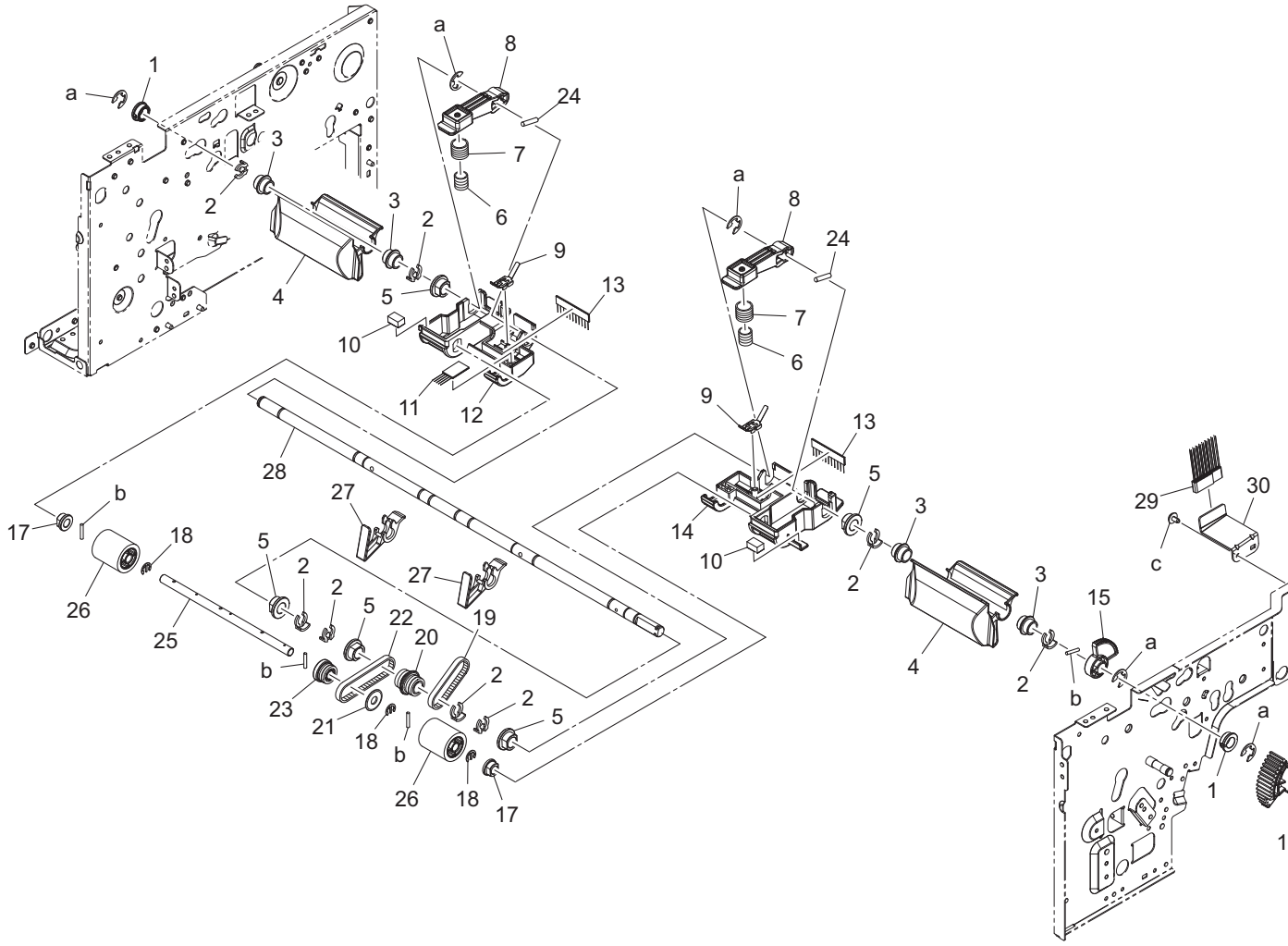

Page	Key	Parts No.	Description	Service Manual	Destinations	Class	Quantity
5	1	A2YUPPS800	Bushing			D	2
5	2	A0U7PP0X00	STOPPER RING			C	8
5	3	A2YUPPV500	Bushing			D	4
5	4	A2YUPPB900	Guide			C	2
5	5	A0U7PP1300	BUSHING			C	5
5	6	A0U7PPB400	Pressing Spring			C	2
5	7	A0U7PPB501	Pressing Spring			C	2
5	8	A2YUPPB600	Lever			C	2
5	9	A2YUPP3100	Plate Spring			D	2
5	10	A2YUPP3900	Cushion			C	2
5	11	A2YUPP3801	Neutralizing Brush			D	1
5	12	A2YUPPB800	Guide			D	1
5	13	A2YUPPE101	Neutralizing Brush			D	2
5	14	A2YUPPB700	Guide			D	1
5	15	A2YUPPM100	Gear			C	1

5	16	A2YUPPM601	Gear			C	1
5	17	A2YUPP4200	Bushing			D	2
5	18	A2YUPPS600	Ring			D	3
5	19	A2YUPPU700	Timing Belt			C	1
5	20	A2YUPPQ800	Gear 22/22T			C	1
5	21	A0U7PP1E00	FLANGE			D	1
5	22	A2YUPPU900	Timing Belt			C	1
5	23	A2YUPPR000	Gear 22T			C	1
5	24	A2YUPPU500	Pin			D	2
5	25	A2YUPPD800	Shaft			D	1
5	26	A2YUPPG100	Roller			C	2
5	27	A2YUPPB500	Lever			C	2
5	28	A2YUPPD900	Shaft			D	1
5	29	A2YUPPX001	Neutralizing Brush			D	1
5	30	A2YUPPW900	Mounting Plate			D	1
5	a	A0U7PP0F00	E RING			D	
5	b	V231201250	pin			V	
5	c	A0U7PP1400	SCREW			D	

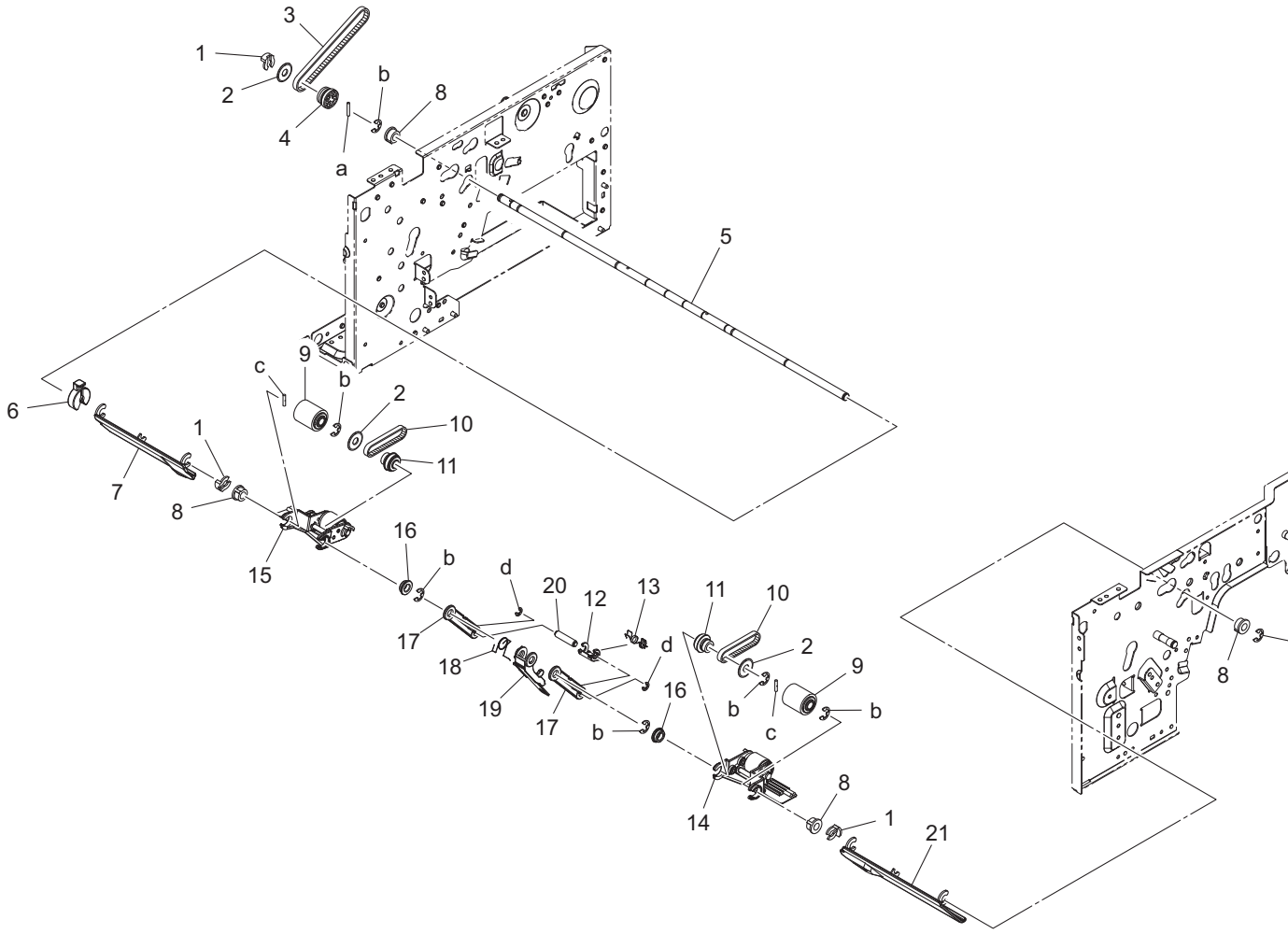

Page	Key	Parts No.	Description	Service Manual	Destinations	Class	Quantity
6	1	A2YUPPS500	Stopper			C	3
6	2	A0U7PP1E00	FLANGE			D	3
6	3	A2YUPPV100	Timing Belt			C	1
6	4	A2YUPPR000	Gear 22T			C	1
6	5	A2YUPPD300	Shaft			D	1
6	6	A2YUPPC200	Stopper			C	1
6	7	A2YUPPA600	Guide			D	1

6	8	A2YUPPS700	Bushing			D	4
6	9	A2YUPPF900	Paper Feed Roller			C	2
6	10	A2YUPPU700	Timing Belt			C	2
6	11	A2YUPPM400	Gear 16/26T			C	2
6	12	A2YUPPB200	Holder			C	1
6	13	A2YUPPQ000	Torsion Spring			C	1
6	14	A2YUPPK001	Roller Assy			B	1
6	15	A2YUPPK101	Roller Assy			B	1
6	16	A2YUPPS900	Bushing			D	2
6	17	A2YUPPA800	Arm			C	2
6	18	A2YUPPQ200	Torsion Spring			C	1
6	19	A2YUPPF000	Weight			C	1
6	20	A2YUPPD600	Shaft			D	1
6	21	A2YUPPA500	Guide			D	1
6	a	V231201250	pin			V	
6	b	A0U7PP0E00	E RING			D	
6	c	V231201050	pin			V	
6	d	V217030001	E Ring			V	

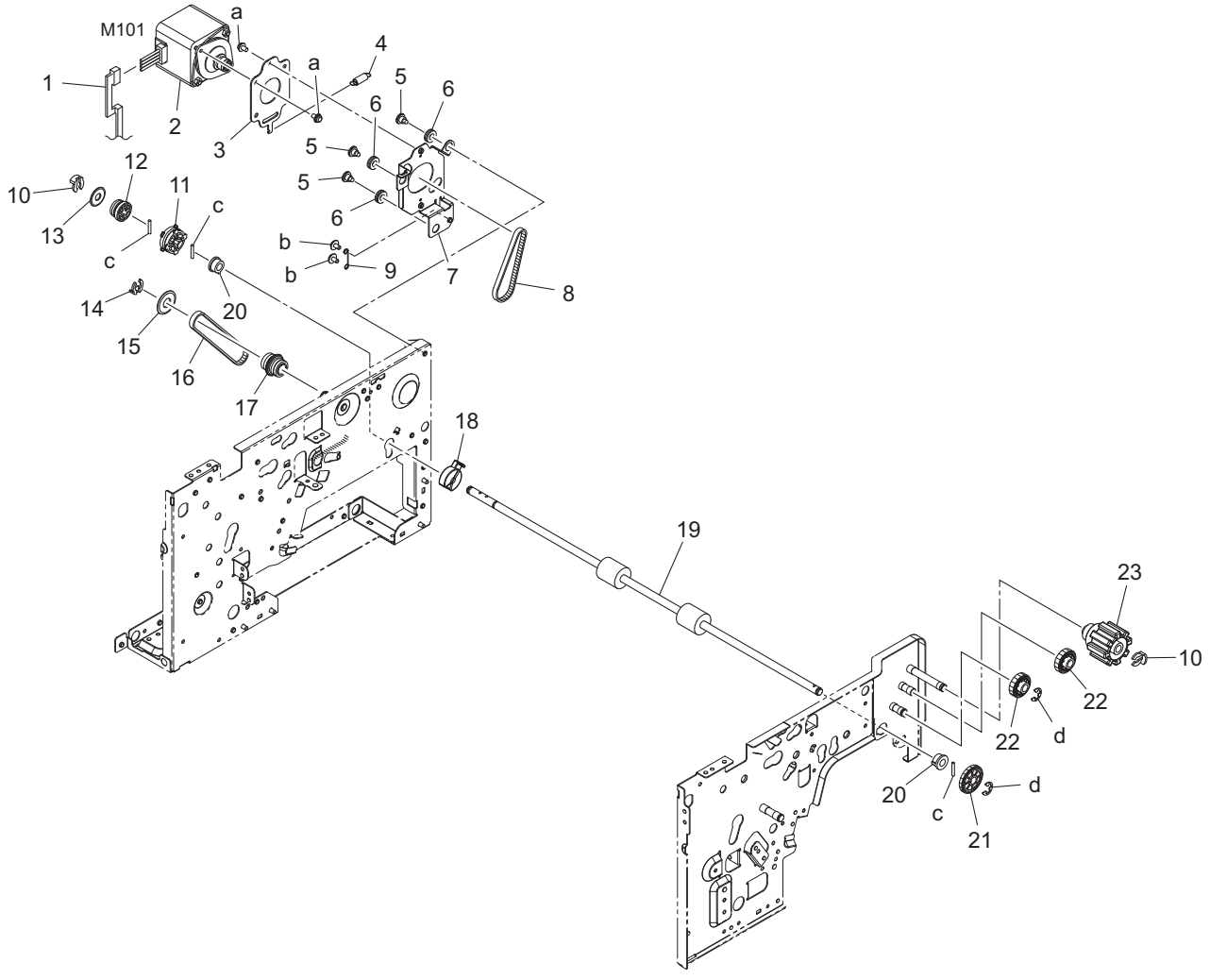

Page	Key	Parts No.	Description	Service Manual	Destinations	Class	Quantity
7	1	A2YUPPH000	Harness			D	1
7	2	A2YUPPW400	Motor	Paper conveyance motor (M101)		C	1
7	3	A2YUPP2800	Mounting Plate			D	1
7	4	A2YUPPP800	Tension Spring			C	1
7	5	A0U7PP8S01	Shoulder Screw			D	3
7	6	A0U7PPAK00	Rubber			D	3
7	7	A2YUPP2700	Mounting Plate			D	1

7	8	A2YUPPV000	Timing Belt			C	1
7	9	A2YUPPQ400	Spring			D	1
7	10	A2YUPPS500	Stopper			C	2
7	11	A2YUPPQ900	Gear 31T			C	1
7	12	A2YUPPR000	Gear 22T			C	1
7	13	A0U7PP1E00	FLANGE			D	1
7	14	A0U7PP0X00	STOPPER RING			C	1
7	15	4583439601	FLANGE			C	1
7	16	A2YUPPV100	Timing Belt			C	1
7	17	A2YUPPQ800	Gear 22/22T			C	1
7	18	A2YUPPC200	Stopper			C	1
7	19	A2YUPPE700	Roller			C	1
7	20	A2YUPPS700	Bushing			D	2
7	21	A2YUPPN400	Gear 27T			C	1
7	22	A2YUPPN500	Gear 22T			C	2
7	23	A2YUPPM900	Knob			C	1
7	a	A2YUPPV800	Screw			D	
7	b	A0U7PP1400	SCREW			D	
7	c	V231201250	pin			V	
7	d	A0U7PP0E00	E RING			D	

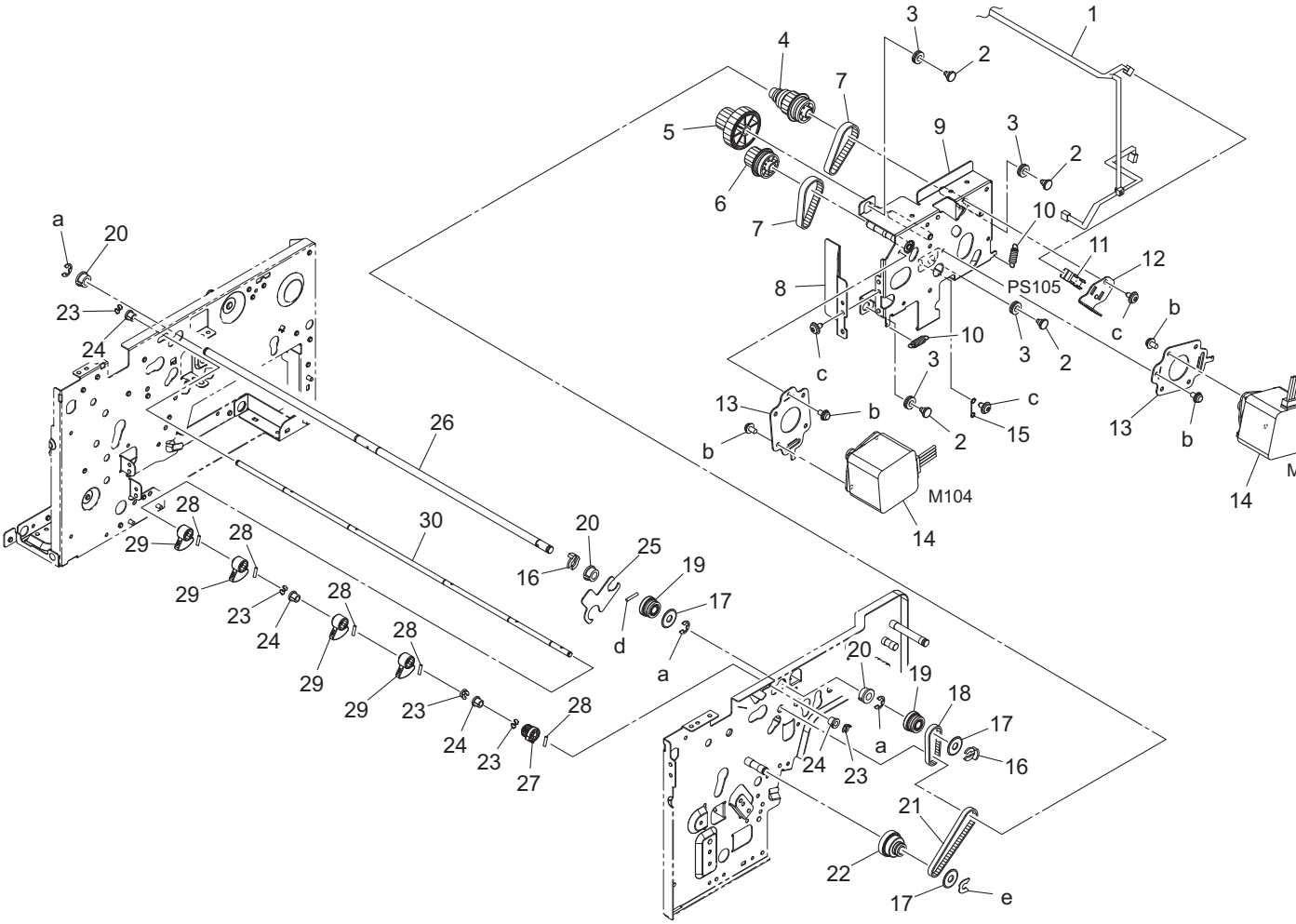

Page	Key	Parts No.	Description	Service Manual	Destinations	Class	Quantity
8	1	A2YUPPH601	Harness			D	1
8	2	A0U7PP8S01	Shoulder Screw			D	4
8	3	A0U7PPAK00	Rubber			D	4
8	4	A2YUPPN000	Gear 18/25/31T			C	1
8	5	A2YUPPM500	Gear 16/40T			C	1

8	6	A2YUPPN100	Gear 18/33T			C	1
8	7	A2YUPPU800	Timing Belt			C	2
8	8	A2YUPP8400	Sound Shield Plate			D	1
8	9	A2YUPPG601	Mounting Plate			D	1
8	10	A2YUPPP800	Tension Spring			C	2
8	11	A2YUPPT800	Photointerrupter	Pick up roller position sensor (PS105)		I	1
8	12	A2YUPP3300	Mounting Plate			D	1
8	13	A2YUPP2800	Mounting Plate			D	2
8	14	A2YUPPW400	Motor	Paper exit motor (M102) Exit roller lift up motor (M104)		C	2
8	15	A2YUPPQ400	Spring			D	1
8	16	A2YUPPS500	Stopper			C	2
8	17	A0U7PP1E00	FLANGE			D	3
8	18	A2YUPPU600	Timing Belt			C	1
8	19	A2YUPPR000	Gear 22T			C	2
8	20	A2YUPPS700	Bushing			D	3
8	21	A2YUPPV000	Timing Belt			C	1
8	22	A2YUPPN200	Gear 17/24T			C	1
8	23	A2YUPPV600	Stopper			C	5
8	24	A2YUPPN600	Bushing			D	4
8	25	A2YUPP3700	Plate			D	1
8	26	A2YUPPD701	Shaft			D	1
8	27	A2YUPPM200	Gear 18T			C	1
8	28	A2YUPPU300	Pin			D	5
8	29	A2YUPPC001	Cam			C	4
8	30	A2YUPPB401	Shaft			D	1
8	a	A0U7PP0E00	E RING			D	
8	b	A2YUPPV800	Screw			D	
8	c	A0U7PP1400	SCREW			D	
8	d	V231201250	pin			V	
8	e	A0U7PP0V00	E RING			D	

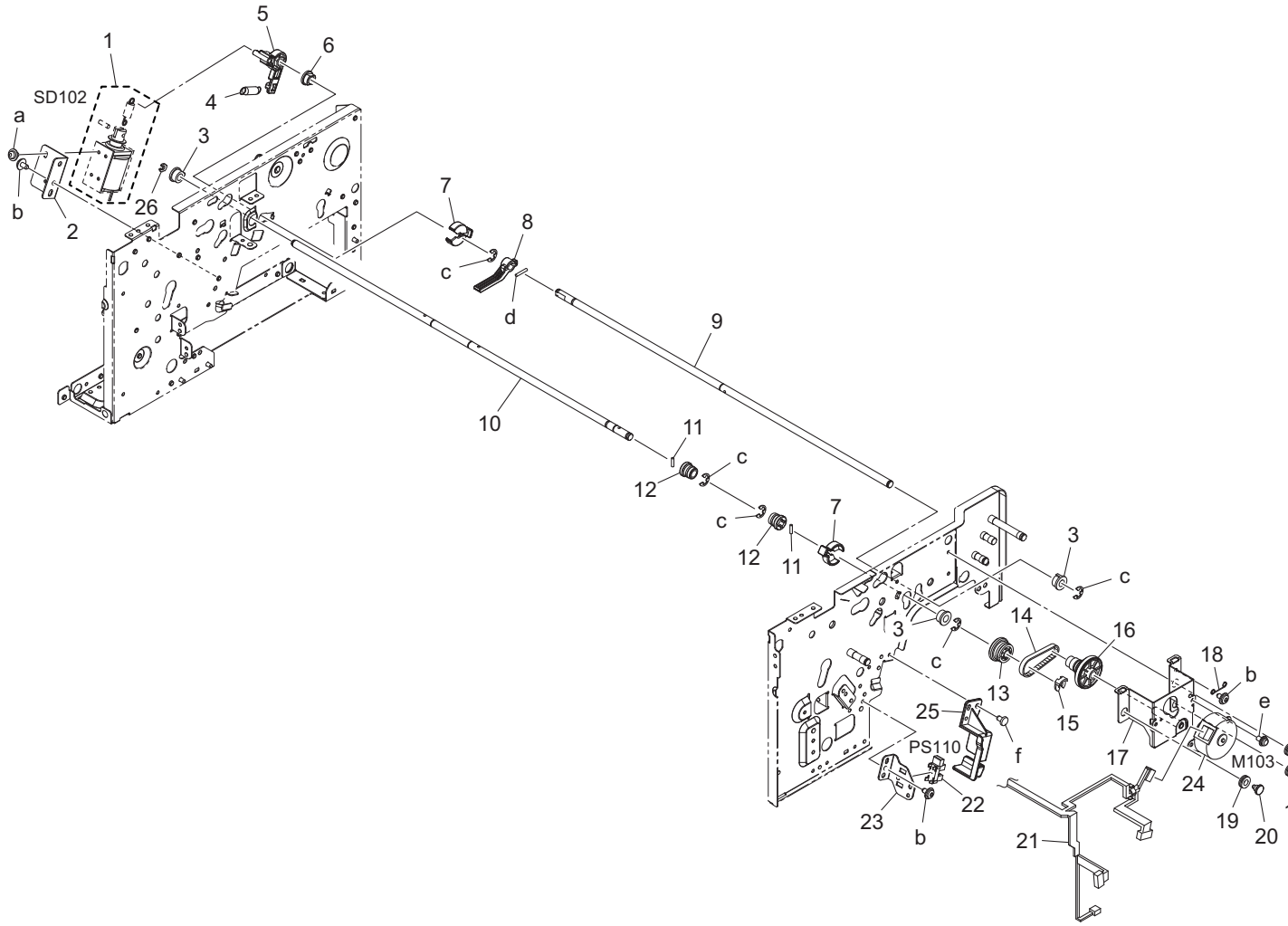

Page	Key	Parts No.	Description	Service Manual	Destinations	Class	Quantity
9	1	A2YUPPV400	SOLENOID Assy	Batch solenoid (SD102)		C	1
9	2	A2YUPP3000	Mounting Plate			D	1
9	3	A2YUPPS700	Bushing			D	3
9	4	A2YUPPQ100	Tension Spring			D	1
9	5	A2YUPPB300	Lever			C	1
9	6	A2YUPP4200	Bushing			D	1
9	7	A2YUPPC200	Stopper			C	2
9	8	A2YUPPA700	Lever			C	1
9	9	A2YUPPD500	Shaft			D	1
9	10	A2YUPPD200	Shaft			D	1
9	11	A2YUPPU300	Pin			D	2
9	12	A2YUPPR100	Gear 16/26T			C	2
9	13	A2YUPPQ600	Gear 26T			C	1
9	14	A2YUPPU700	Timing Belt			C	1
9	15	A2YUPPS500	Stopper			C	1
9	16	A2YUPPM300	Gear 17/54T			C	1
9	17	A2YUPPG501	Mounting Plate			D	1
9	18	A2YUPPQ400	Spring			D	1
9	19	A0U7PPAK00	Rubber			D	3
9	20	A0U7PP8S01	Shoulder Screw			D	3
9	21	A2YUPPH101	Harness			D	1
9	22	A2YUPPT800	Photointerrupter	Stapler home sensor (PS110)		I	1
9	23	A2YUPP3300	Mounting Plate			D	1
9	24	A2YUPPW600	Motor	Alignment roller motor (M103)		C	1
9	25	A2YUPP8300	Cover			D	1

9	26	A0U7PP0U00	STOPPER RING			D	1
9	a	A2YUPPU100	Screw			D	
9	b	A0U7PP1400	SCREW			D	
9	c	A0U7PP0E00	E RING			D	
9	d	V231201250	pin			V	
9	e	A2YUPPV800	Screw			D	
9	f	A0U7PPAH00	Screw			D	

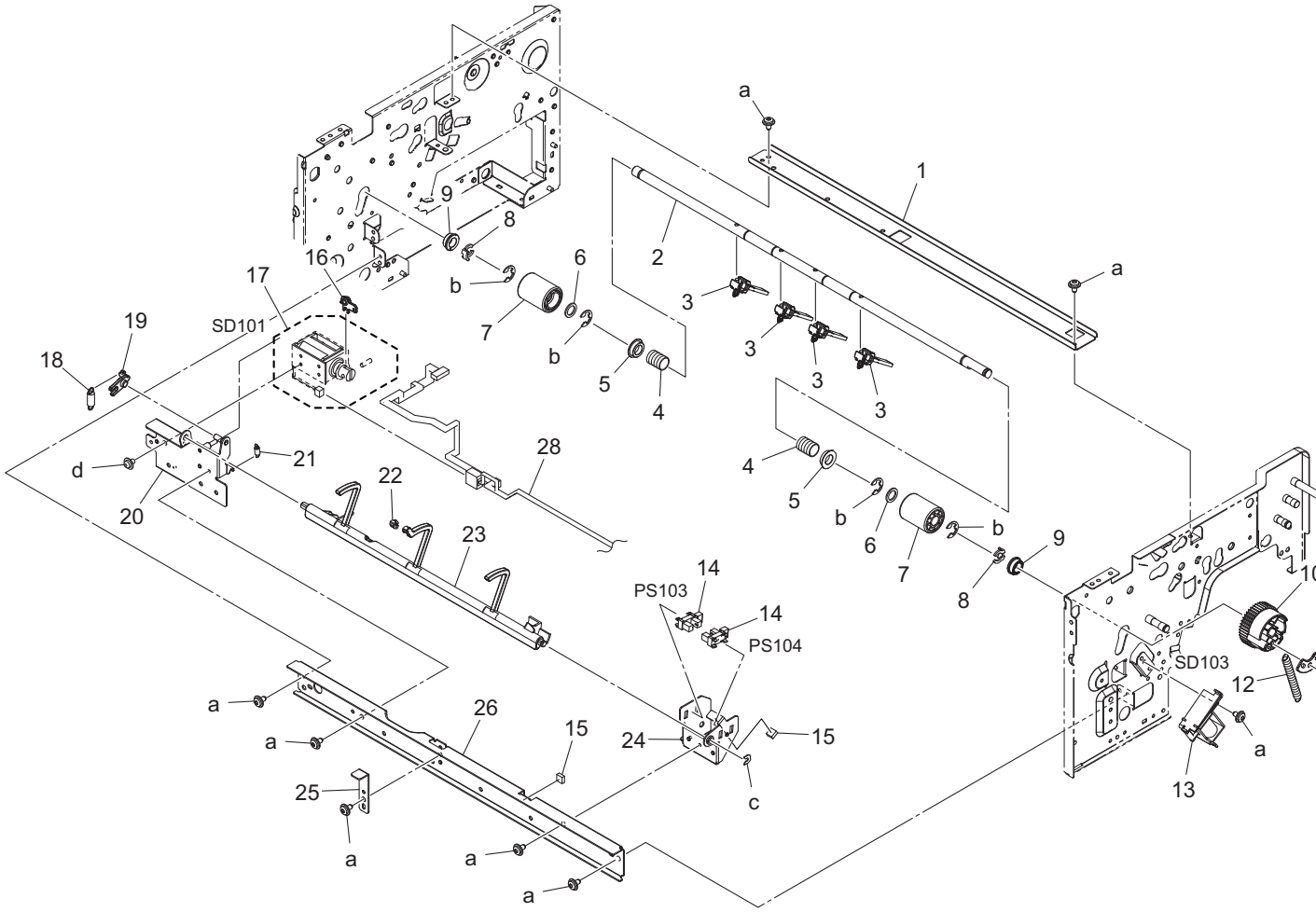

Page	Key	Parts No.	Description	Service Manual	Destinations	Class	Quantity
10	1	A2YUPP1900	Reinforce Plate			D	1
10	2	A2YUPPD001	Shaft			D	1
10	3	A0U7PP2R00	PADDLE ASSY			C	4
10	4	A2YUPPW200	Pressing Spring			C	2
10	5	A2YUPPC400	Bushing			C	2
10	6	A0U7PPCB00	Collar			C	2
10	7	A2YUPPA000	Roll			C	2
10	8	A0U7PP0X00	STOPPER RING			C	2
10	9	A2YUPPS800	Bushing			D	2
10	10	A2YUPPR200	Gear 43T			C	1
10	11	A2YUPPR300	Paddle			C	1
10	12	A0U7PP1U00	TENSION SPRING			D	1
10	13	A0U7PPA500	Solenoid	Paper exit roller solenoid (SD103)		C	1
10	14	A2YUPPT800	Photointerrupter	Paper weight lever sensor (PS103) Paper surface detect sensor/2 (PS104)		I	2
10	15	A0U7PP2J00	CUSHION			C	2
10	16	A2YUPP6800	Lever			C	1

10	17	A2YUPPV300	SOLENOID Assy	Paper surface detect solenoid (SD101)		C	1
10	18	A2YUPPN900	Tension Spring			D	1
10	19	A2YUPP6700	Lever			C	1
10	20	A2YUPPF100	Mounting Plate			D	1
10	21	A2YUPPN800	Tension Spring			D	1
10	22	A0U7PP1G00	CUSHION			C	1
10	23	A2YUPP6600	Lever			C	1
10	24	A2YUPP1400	Mounting Plate			D	1
10	25	A2YUPP4100	Plate			D	1
10	26	A2YUPP1700	Mounting Plate			D	1
10	27	A2YUPPT000	Screw			D	1
10	28	A2YUPPH700	Harness			D	1
10	a	A0U7PP1400	SCREW			D	
10	b	A0U7PP0F00	E RING			D	
10	c	A01FPP0W00	RETAINING RING			C	
10	d	A2YUPPU100	Screw			D	

5.5 ADJUSTMENT SECTION

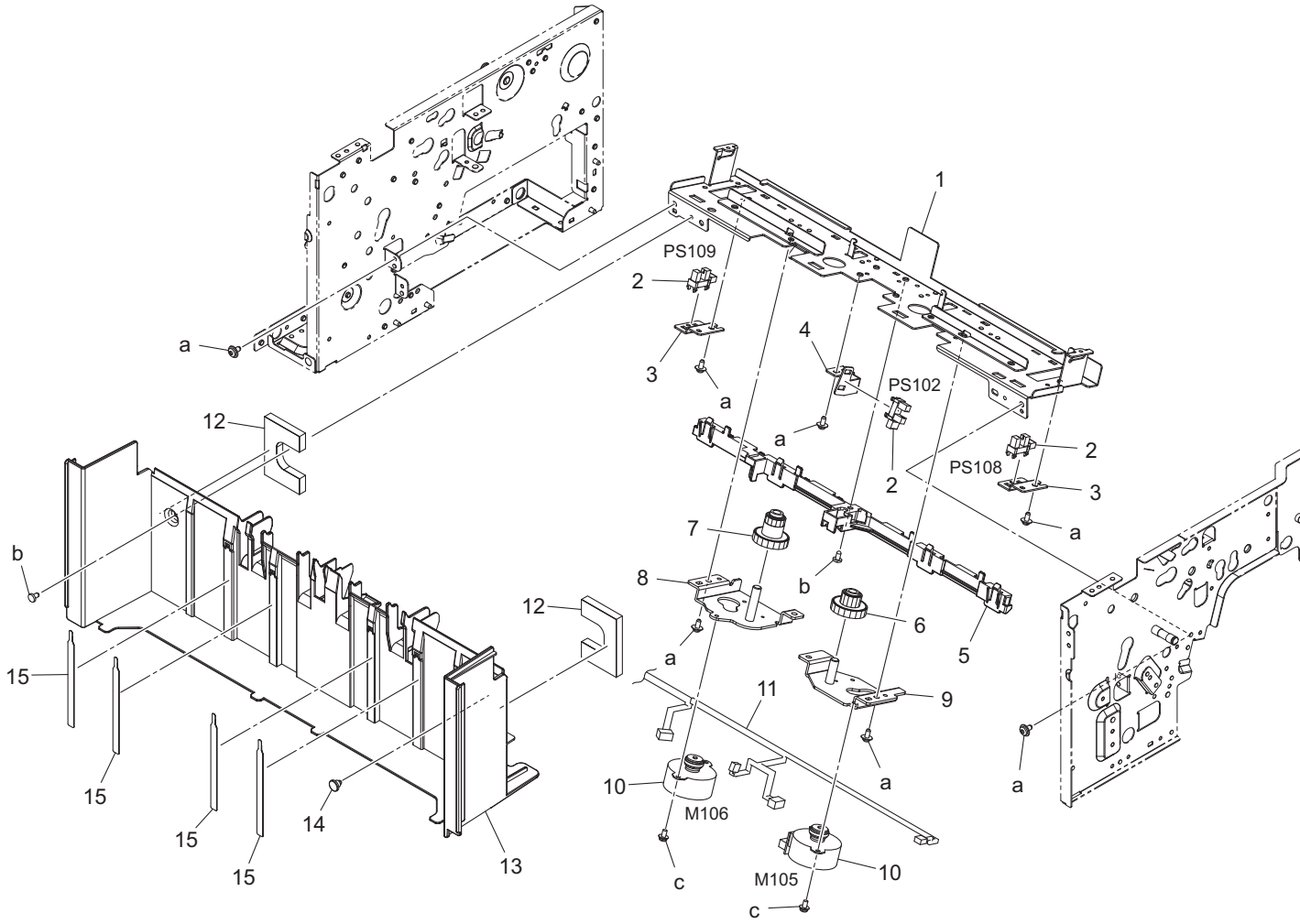

Page	Key	Parts No.	Description	Service Manual	Destinations	Class	Quantity
11	1	A2YUPP2202	Mounting Plate			D	1
11	2	A2YUPPT800	Photointerrupter	Paper surface detect sensor/1 (PS102) Alignment plate home sensor/F (PS108) Alignment plate home sensor/R (PS109)		I	3

11	3	A2YUPP2501	Mounting Plate			D	2
11	4	A2YUPP3400	Mounting Plate			D	1
11	5	A2YUPPA200	Guide			D	1
11	6	A2YUPPM700	Gear 16/49T			C	1
11	7	A2YUPPM800	Gear 16/49T			C	1
11	8	A2YUPPG300	Mounting Plate			D	1
11	9	A2YUPPG200	Mounting Plate			D	1
11	10	A2YUPPW600	Motor	Alignment motor/F (M105) Alignment motor/R (M106)		C	2
11	11	A2YUPPH400	Harness			D	1
11	12	A2YUPP7800	Cushion			C	2
11	13	A2YUPP5901	Cover			D	1
11	14	A0U7PP8S01	Shoulder Screw			D	1
11	15	A2YUPPE800	Sheet			C	4
11	a	A0U7PP1400	SCREW			D	
11	b	A0U7PPAH00	Screw			D	
11	c	A2YUPPV800	Screw			D	

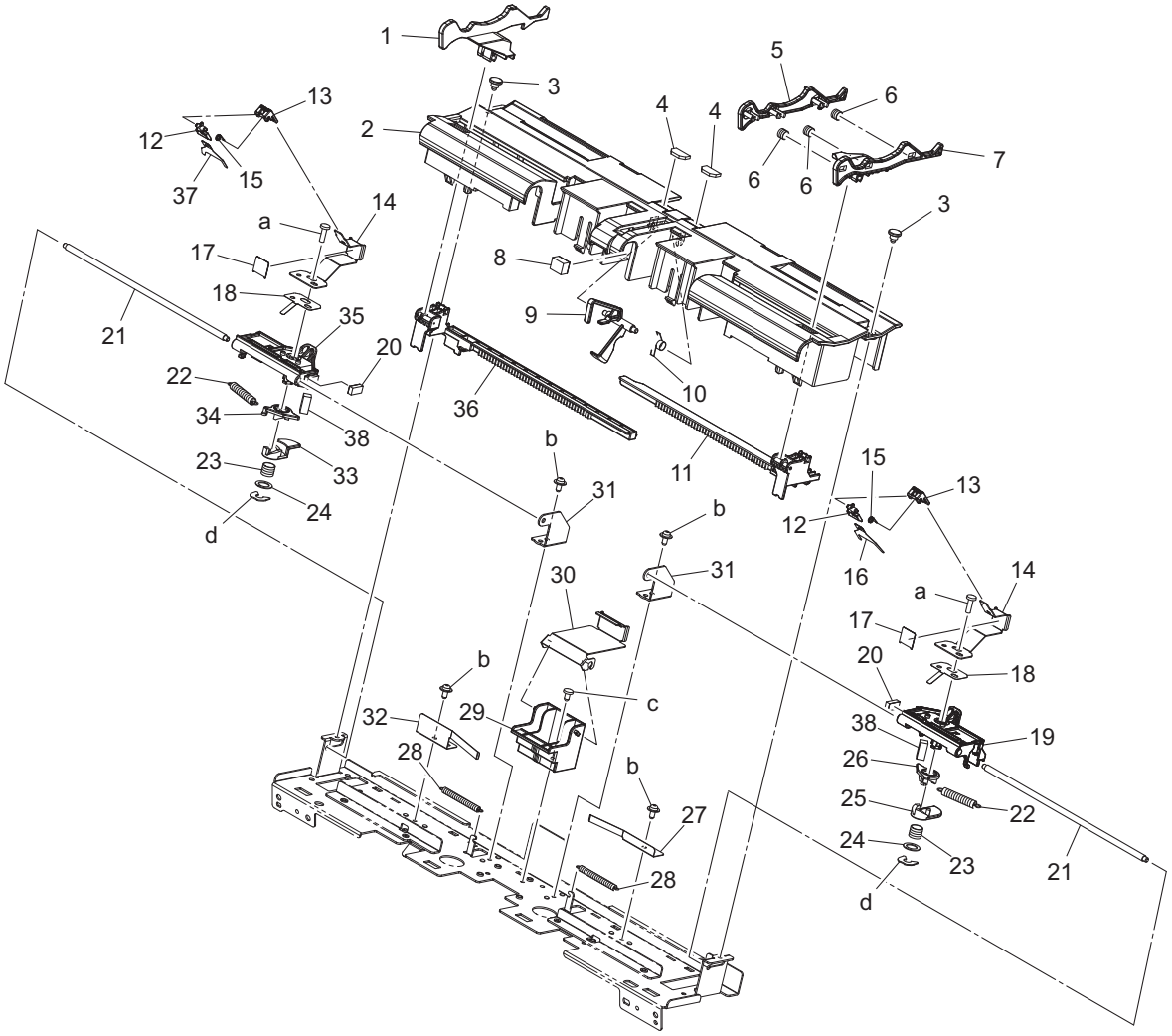

Page	Key	Parts No.	Description	Service Manual	Destinations	Class	Quantity
12	1	A2YUPP8800	Regulating Plate			C	1
12	2	A2YUPP8500	Tray			D	1
12	3	A0U7PP8S01	Shoulder Screw			D	2
12	4	A2YUPPE300	Pad			C	2
12	5	A2YUPP8700	Guide			C	1
12	6	A2YUPPP900	Pressure Spring			D	3
12	7	A2YUPP8600	Regulating Plate			C	1
12	8	A2YUPP4300	Cushion			C	1

12	9	A2YUPPA100	Actuator			C	1
12	10	A2YUPPQ300	Torsion Spring			C	1
12	11	A2YUPP8900	Rack			D	1
12	12	A2YUPP9900	Lever			C	2
12	13	A2YUPP9800	Holder			D	2
12	14	A2YUPP2301	Stopper			D	2
12	15	A2YUPPP300	Torsion Spring			C	2
12	16	A2YUPPE200	Sheet			C	1
12	17	A2YUPPC800	Sheet			D	2
12	18	A2YUPP2600	Stopper			D	2
12	19	A2YUPP9202	Holder			D	1
12	20	A2YUPPW800	Cushion			C	2
12	21	A2YUPPD100	Shaft			D	2
12	22	A2YUPPP500	Tension Spring			D	2
12	23	A2YUPPP600	Pressure Spring			D	2
12	24	A2YUPPT700	Spacer			D	2
12	25	A2YUPP9600	Lever			D	1
12	26	A2YUPP9401	Lever			D	1
12	27	A2YUPP2900	Plate Spring			D	1
12	28	A2YUPPP400	Tension Spring			D	2
12	29	A2YUPP9101	Holder			D	1
12	30	A2YUPP2401	Stopper			D	1
12	31	A2YUPP3200	Mounting Plate			D	2
12	32	A2YUPP3500	Plate Spring			D	1
12	33	A2YUPP9700	Lever			D	1
12	34	A2YUPP9501	Lever			D	1
12	35	A2YUPP9302	Holder			D	1
12	36	A2YUPP9000	Rack			D	1
12	37	A2YUPPE400	Sheet			C	1
12	38	A2YUPPW700	Cushion			C	2
12	a	A2YUPPV700	Screw			D	
12	b	A0U7PP1400	SCREW			D	
12	c	A0U7PPAH00	Screw			D	
12	d	A0U7PP0V00	E RING			D	

5.6 STAPLER SECTION

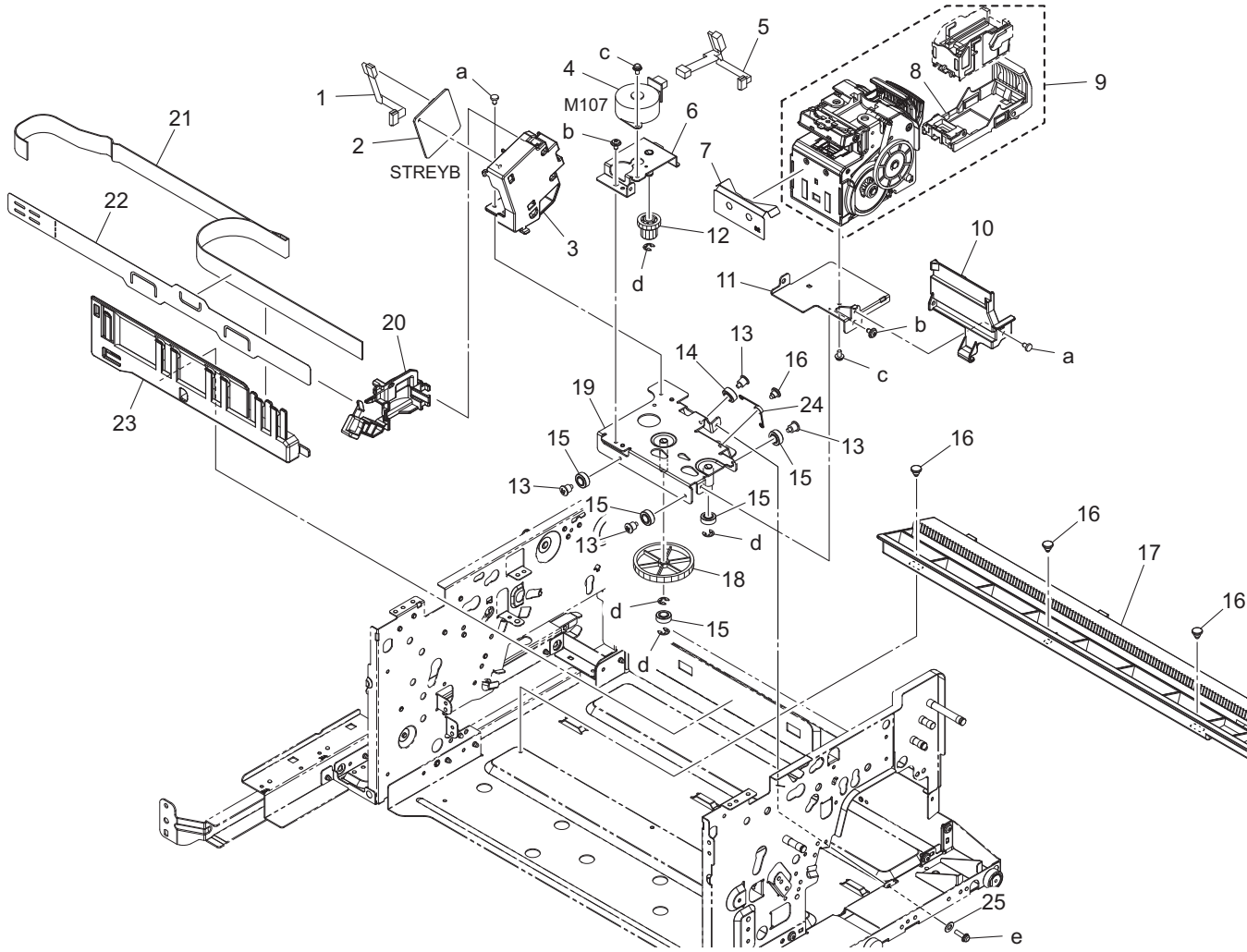

Page	Key	Parts No.	Description	Service Manual	Destinations	Class	Quantity
13	1	A2YUPPH800	Harness			D	1
13	2	A2YUPPG700	PWB Assembly	Stapler relay board (STREYB)		C	1
13	3	A2YUPP5000	Holder			D	1
13	4	A2YUPPT400	Motor	Stapler movement motor (M107)		C	1
13	5	A2YUPPH301	Harness			D	1
13	6	A2YUPPF800	Mounting Plate			D	1
13	7	A2YUPPE900	Guide			C	1
13	8	9J08P00100	STAPLE CARTRIDGE			C	1
13	9	A2YUPPK400	Stapler Unit			C	1
13	10	A2YUPPC101	Holder			D	1
13	11	A2YUPP0101	Mounting Plate			D	1
13	12	A2YUPPN301	Gear 24/35T			C	1
13	13	A2YUPPS200	Shoulder Screw			D	4
13	14	A2YUPPR900	Roll			C	1
13	15	A2YUPPR500	Roll			C	5
13	16	A0U7PP8S01	Shoulder Screw			D	4
13	17	A2YUPP4801	Rail			D	1
13	18	A2YUPPK501	Gear 14/94T			C	1
13	19	A2YUPPF700	Mounting Plate			D	1
13	20	A2YUPP4900	Guide			D	1
13	21	A2YUPPK301	Flatcable			D	1
13	22	A2YUPP7000	Guide			D	1
13	23	A2YUPP6900	Holder			D	1
13	24	A2YUPPN700	Torsion Spring			C	1

13	25	A2YUPPU200	Washer			D	1
13	a	A0U7PPAH00	Screw			D	
13	b	A0U7PP1400	SCREW			D	
13	c	A2YUPPV800	Screw			D	
13	d	A2YUPPS400	E Ring			D	
13	e	A2YUPP0000	Screw			D	

5.7 DRIVE SECTION

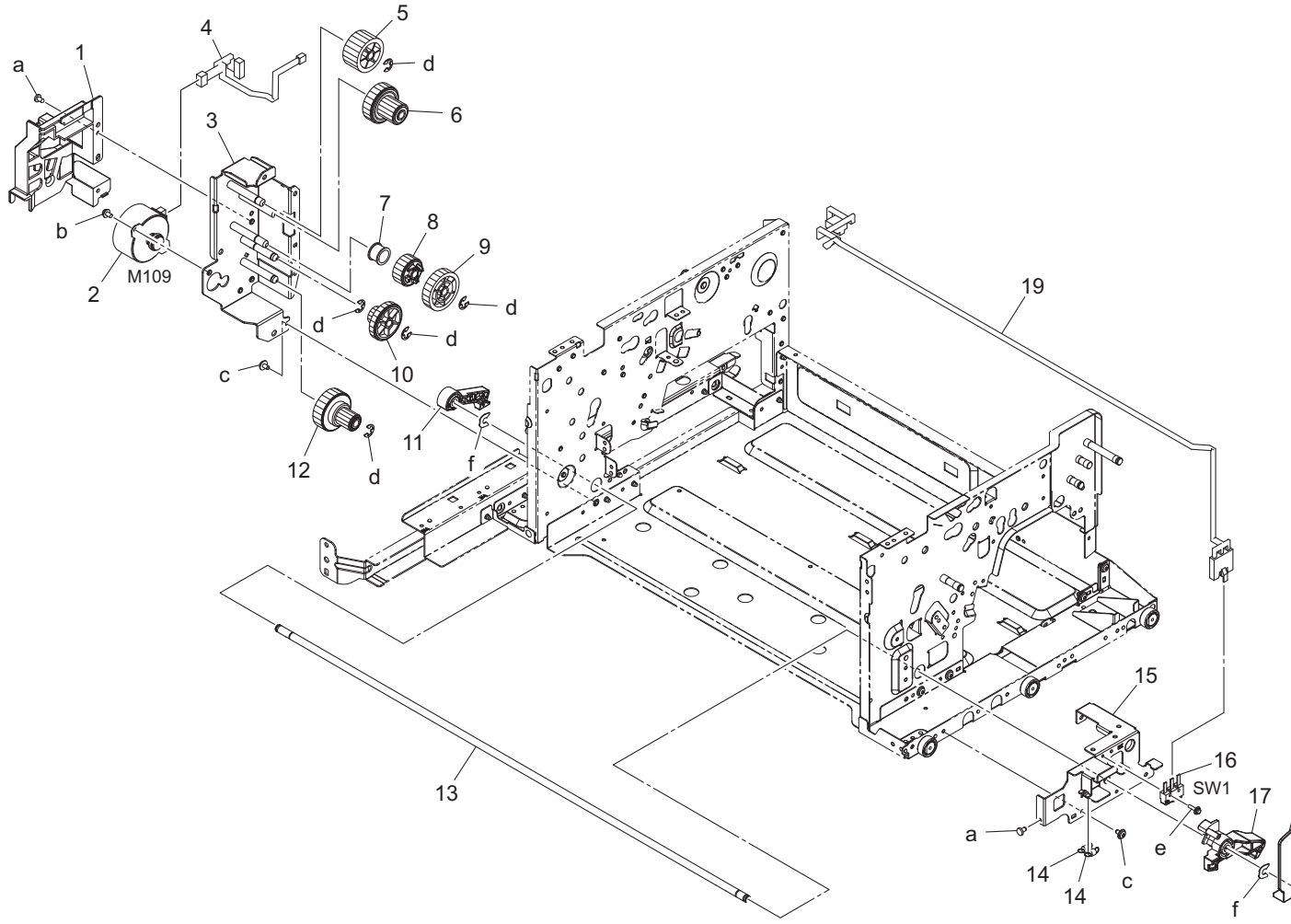

Page	Key	Parts No.	Description	Service Manual	Destinations	Class	Quantity
14	1	A2YUPP2100	Holder			D	1
14	2	A2YUPPW300	Motor	Tray lift up motor (M109)		C	1
14	3	A2YUPPF201	Mounting Plate			D	1
14	4	A2YUPPH200	Harness			D	1
14	5	A2YUPPK600	Gear 28T			C	1
14	6	A2YUPPM001	Gear 16/38T			C	1
14	7	A0U7PP1Q00	PRESSING SPRING			C	1
14	8	A2YUPPK801	Gear 28T			C	1
14	9	A2YUPPK900	Gear 40T			C	1
14	10	A2YUPPK701	Gear 16/38T			C	1
14	11	A2YUPP5200	Lever			D	1
14	12	A2YUPPK200	Torque Limiter			C	1
14	13	A2YUPPE001	Shaft			D	1
14	14	A0U7PP8W01	Tension Spring			D	2
14	15	A2YUPP0400	Mounting Plate			D	1
14	16	A0U7PP0800	MICRO SWITCH	Finisher lock switch (SW1)		C	1
14	17	A2YUPP5500	Lever			D	1

14	18	A2YUPP5100	Handle			D	1
14	19	A2YUPPG900	Harness			D	1
14	20	A2YUPPS500	Stopper			C	1
14	a	A0U7PPAH00	Screw			D	
14	b	A2YUPPV800	Screw			D	
14	c	A0U7PP1400	SCREW			D	
14	d	A0U7PP0E00	E RING			D	
14	e	A2YUPPW100	SCREW			D	
14	f	A0U7PP0V00	E RING			D	

5.8 ELECTRICAL COMPONENTS

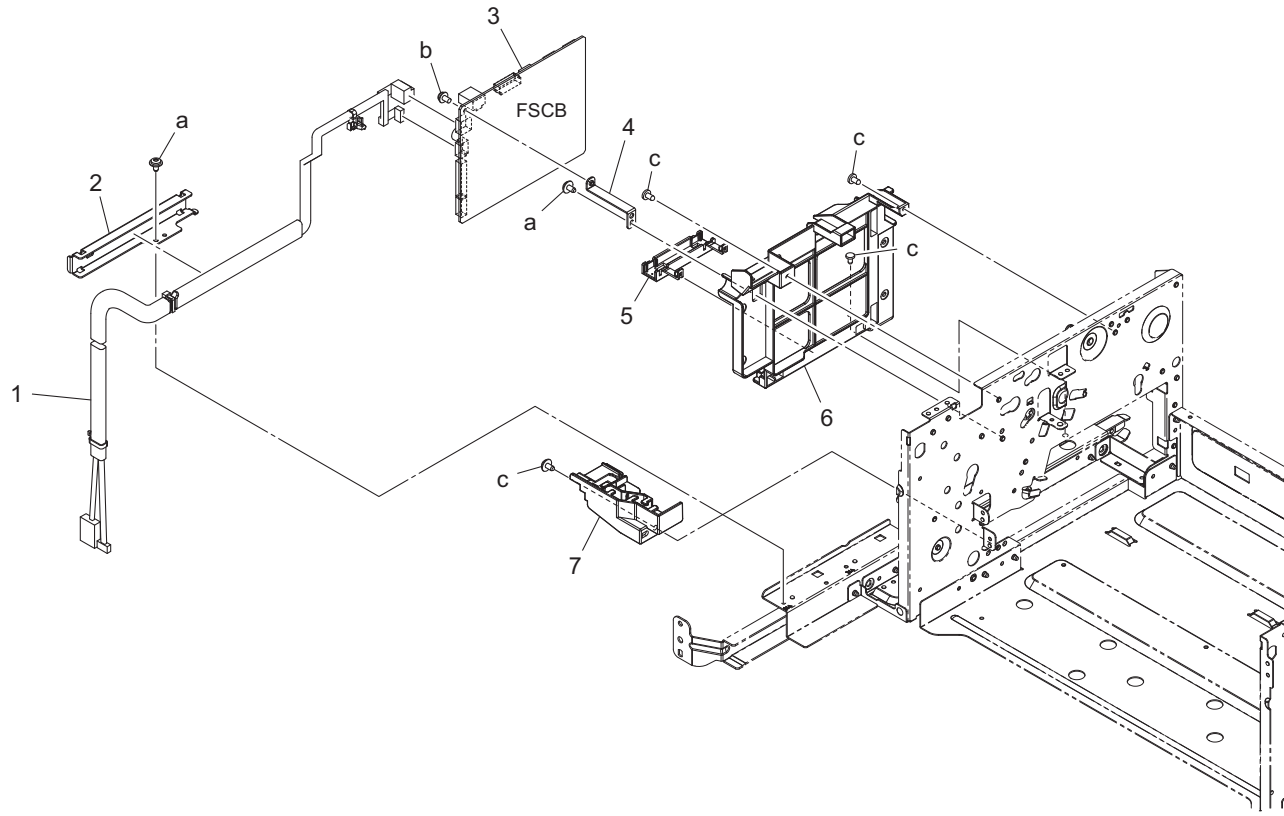

Page	Key	Parts No.	Description	Service Manual	Destinations	Class	Quantity
15	1	A2YUPPG801	Harness			D	1
15	2	A2YUPP1800	Guide			D	1
15	3	A2YUPPH901	PWB Assembly	FS control board (FSCB)		I	1
15	4	A2YUPP7500	Mounting Plate			D	1
15	5	A2YUPPC700	Guide			D	1
15	6	A2YUPP7701	Holder			D	1
15	7	A2YUPP7601	Holder			D	1
15	a	A0U7PP1400	SCREW			D	
15	b	A2YUPPT100	Screw			D	
15	c	A0U7PPAH00	Screw			D	

5.9 WIRING ACCESSORIES AND JIGS

1 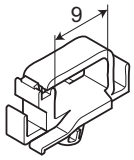	6	11	16	21	26	31	36
2 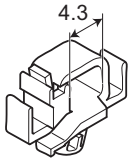	7	12	17	22	27	32	37
3 	8	13	18	23	28	33	38
4	9	14	19	24	29	34	39
5	10	15	20	25	30	35	40

Page	Key	Parts No.	Description	Service Manual	Destinations	Class	Quantity
16	1	A0U7PP0C00	CODE CLAMP			D	
16	2	A0U7PP0D00	CODE CLAMP			D	
16	3	A2YUPPT900	Cable Tie			D	

5.10 DESTINATION

Destination No.		Destinations		V	Hz	Model No.
A	A1	JAPAN		100	50/60	A2YUWY1
	A2	JAPAN				
B		USA, CANADA		120	60	A2YUWY1
C		EUROPEAN TYPE		220-240	50/60	A2YUWY1
D	D1	S.E ASIA TYPE	THAILAND,SRI LANKA,SINGAPORE,MALAYSIA,HONGKONG, PAKISTAN,INDIA,BANGLADESH,INDONESIA	220-240	50/60	A2YUWY1
	D3	OCEAINA TYPE	AUSTRALIA,NEW ZEALAND	220-240	50/60	A2YUWY1
E		PHILIPPINES		220-240	50/60	A2YUWY1
F	F1	SAUDI ARABIA				
	F2	SAUDI ARABIA		220-240	50/60	A2YUWY1
G	G1	C.S AMERICA		220-240	50/60	A2YUWY1
	G2	C.S AMERICA		120	60	A2YUWY1
H		TAIWAN		110	60	A2YUWY1

I	JORDAN, LEBANON, SYRIA, SOUTH AFRICA, IRAQ, IRAN, N.YEMEN, CAMEROON, UAE, BAHRAIN, OMAN, QATAR, KUWAIT, KENYA, TUNISIA, IVORY COAST, MOROCCO	220-240	50/60	A2YUWY1
J	CHINA	220-240	50/60	A2YUWY1
K	KOREA	220-240	50/60	A2YUWY1

6. SORTER/FINISHER (FS-534)

6.1 EXTERNAL PARTS

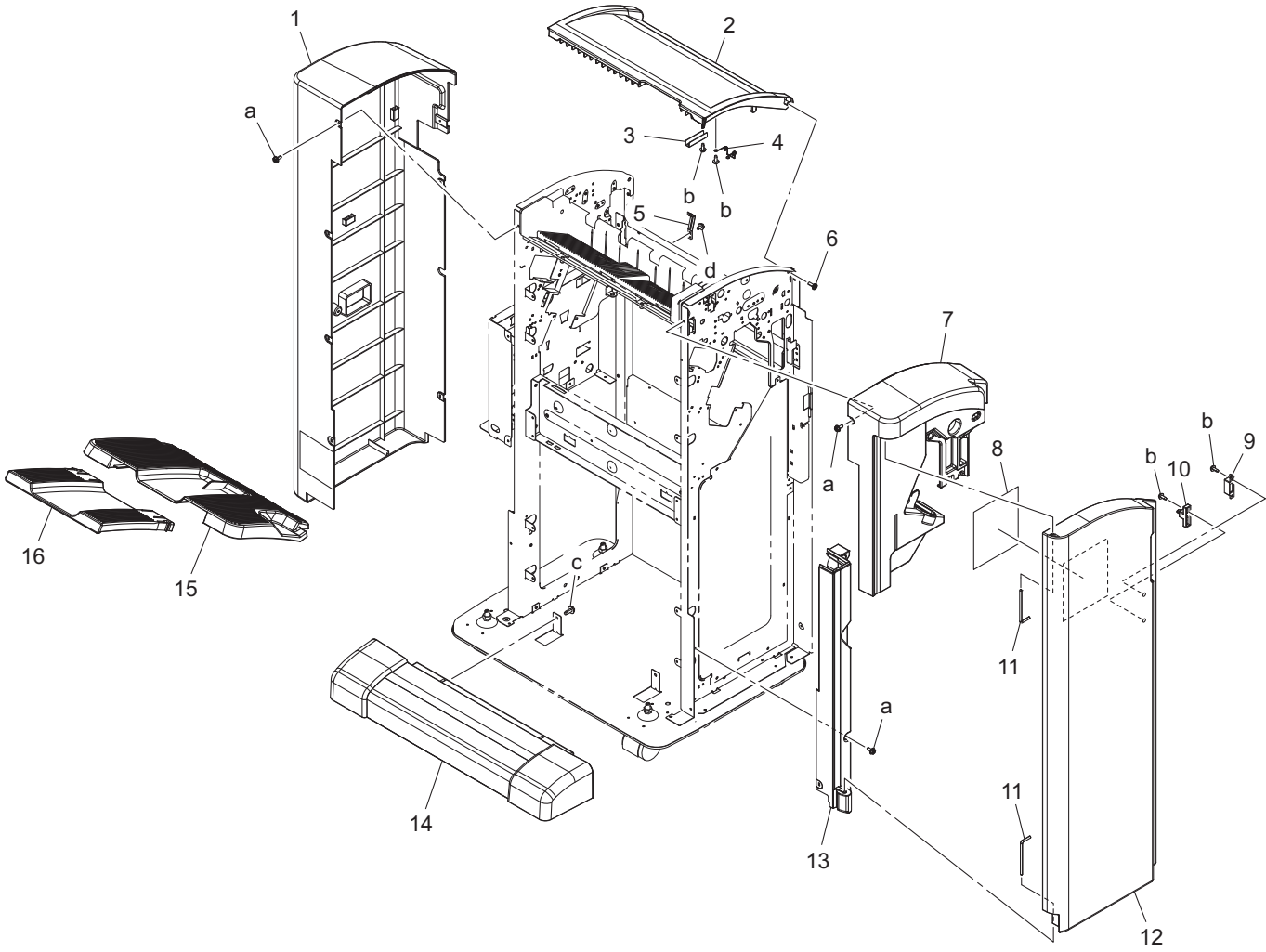

Page	Key	Parts No.	Description	Service Manual	Destinations	Class	Quantity
1	1	A3EPPP1P02	Rear Cover			C	1
1	2	A3EPPP1R02	Upper Cover			C	1
1	3	A3EPPP1S02	Bracket			D	1
1	4	A0HR172601	Torsion Coil spring			C	1
1	5	A0HR115400	Ground Plate /Lower			D	1
1	6	A3EPPP2501	Screw			D	1
1	7	A3EPPP1K02	Cover			D	1
1	8	A3EPPPBG00	Label			D	1
1	9	A3EPPPCP00	MAGNET CATCH			D	1
1	10	A3EPPP2301	Actuator			C	1
1	11	A3EPPP1N00	Shaft			D	2
1	12	A3EPPP1M02	Front Cover			C	1
1	13	A3EPPP1L02	Cover			D	1
1	14	A3EPPP1G01	Lower Cover			C	1
1	15	A3EPPP2001	Tray			C	1
1	16	A3EPPP1Y01	Tray			C	1
1	a	A3EPPPB801	Screw			D	
1	b	A3EPPPBA01	Screw			D	
1	c	A3EPPPB401	Screw			D	
1	d	A3EPPPB601	Screw			D	

6.2 FRAME SECTION

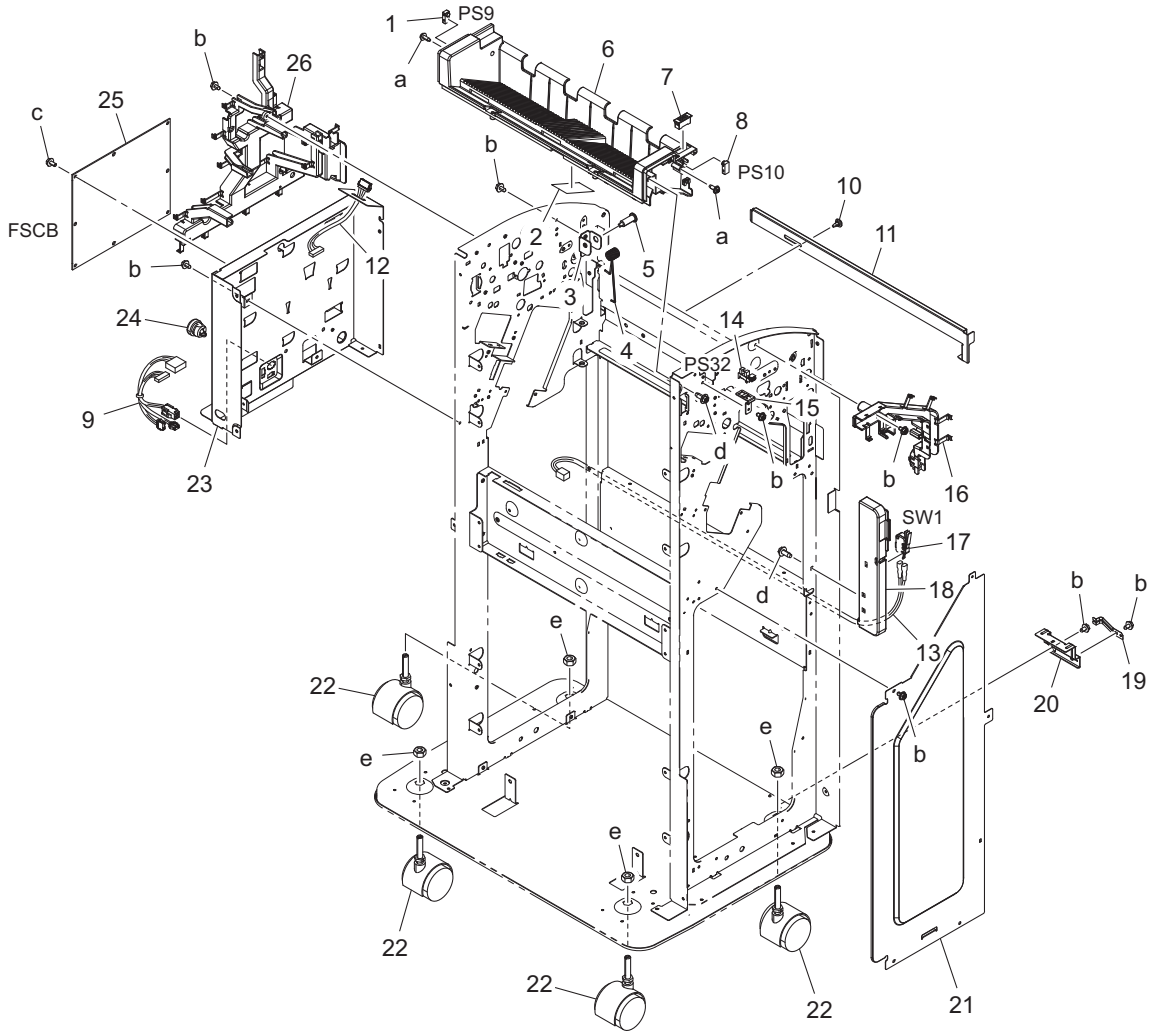

Page	Key	Parts No.	Description	Service Manual	Destinations	Class	Quantity
2	1	A3EPPP2700	Photoreflector	Sub tray full detection sensor/out (PS9)		I	1
2	2	A3EPPPBD01	Sheet			D	1
2	3	A3EPPP2N01	Bracket			D	1
2	4	A3EPPP4C01	Torsion Coil spring			C	1
2	5	A3EPPP5201	Screw			D	1
2	6	A3EPPP1F01	Cover			C	1
2	7	4030104002	CATCH			D	1
2	8	A3EPPP2600	Photoreflector	Sub tray full detection sensor/in (PS10)		I	1
2	9	A3EPPPC200	Wire Harness Assy			D	1
2	10	A092145400	Shoulder screw			C	1
2	11	A3EPPP1B01	Reinforce Plate			D	1
2	12	A3EPPPBV00	Wire Harness Assy			D	1
2	13	A3EPPPBT00	Wire Harness Assy			D	1
2	14	A108M50100	Photointerrupter	Upper cover open/close detection sensor (PS32)		B	1
2	15	A3EPPP2201	Bracket			D	1
2	16	A3EPPP1X01	Guide			C	1
2	17	9J06M60100	MICRO SWITCH	Front door open detect switch (SW1)		C	1
2	18	A3EPPP1V01	Cover			C	1
2	19	A0HR115400	Ground Plate /Lower			D	1
2	20	A0HR116000	Mounting Plate			D	1
2	21	A3EPPP1U01	Cover			D	1

2	22	A0HR111400	Castor			C	4
2	23	A3EPPP1J02	Bracket			D	1
2	24	A3EPPP2400	Bushing			C	1
2	25	A3EPPPBE01	Main PCB Assy	FS control board (FSCB)		I	1
2	26	A3EPPP1T01	Guide			C	1
2	a	A3EPPPBA01	Screw			D	
2	b	A3EPPPB601	Screw			D	
2	c	A3EPPPB101	Screw			D	
2	d	A3EPPPB401	Screw			D	
2	e	V195080003	Nut			V	

6.3 PAPER TRANSPORT SECTION

P 3

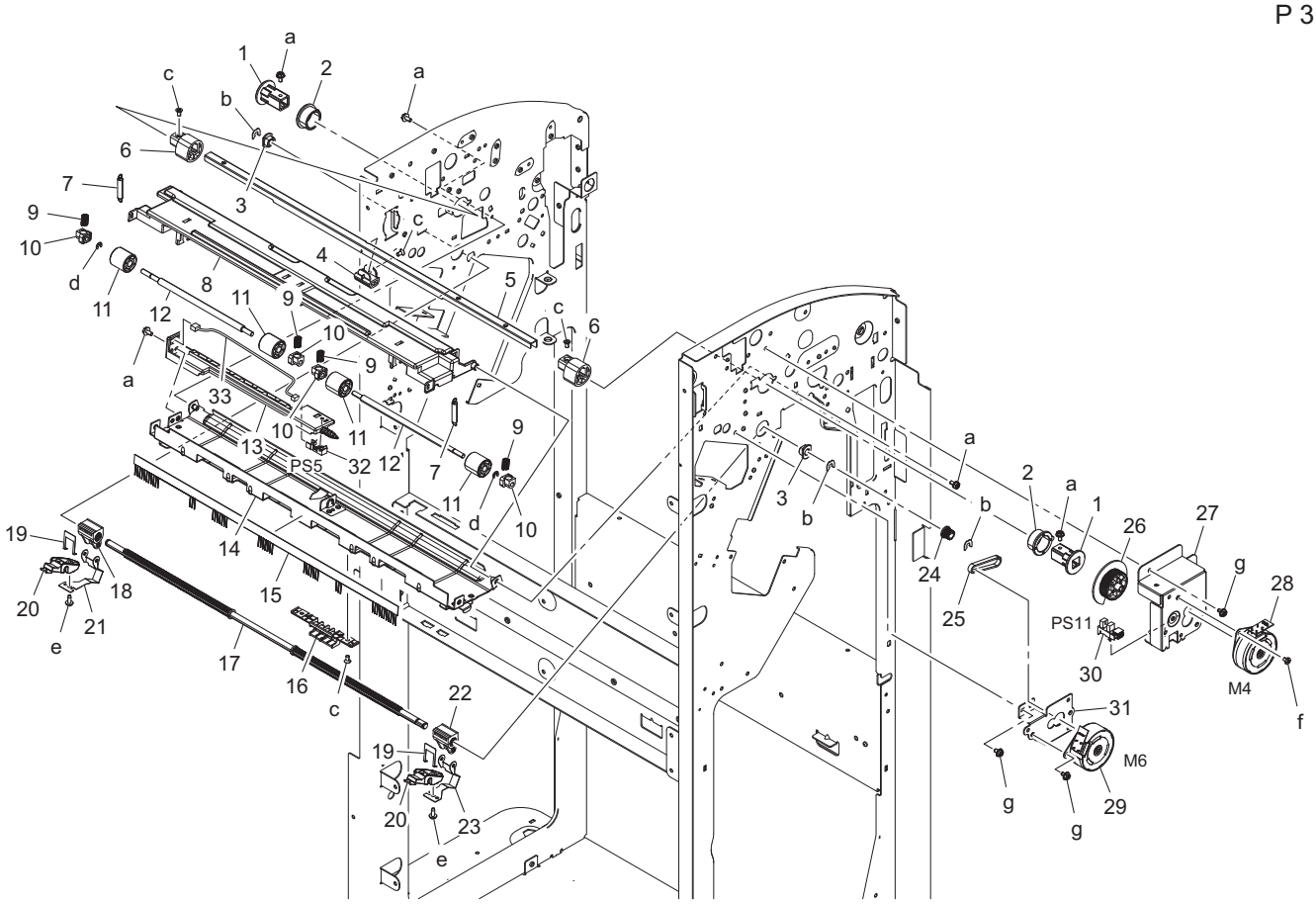

Page	Key	Parts No.	Description	Service Manual	Destinations	Class	Quantity
3	1	A3EPPP3J00	Bush			C	2
3	2	A3EPPP3F00	Bush			C	2
3	3	A3EPPP1400	Bushing			D	2
3	4	A3EPPP3M00	Cam			C	1
3	5	A3EPPP2J01	Bracket			D	1
3	6	A3EPPP3901	Cam			C	2
3	7	A3EPPP4902	Tension Spring			C	2
3	8	A3EPPP3K02	Guide			D	1
3	9	A3EPPP4701	Pressure Spring			C	4
3	10	A3EPPP1A01	Bush			C	4
3	11	A3EPPP2Q02	Roller			C	4
3	12	A3EPPP3X00	Shaft			D	2
3	13	A3EPPP3L01	Guide			D	1
3	14	A3EPPP2P01	Guide Assy			D	1
3	15	A3EPPP5401	Neuralizing Brush			C	1
3	16	A3EPPP3R01	Screw			D	1

3	17	A3EPPP4102	Shaft			D	1
3	18	A3EPPP3Q00	Nut			C	1
3	19	A3EPPP6L01	Film			C	2
3	20	A3EPPP6G00	Drum			C	2
3	21	A3EPPP6H01	Stopper			C	1
3	22	A3EPPP3P01	Nut			C	1
3	23	A3EPPP6F01	Stopper			C	1
3	24	A3EPPP3N00	Screw			D	1
3	25	A3EPPP4U00	Timing Belt			C	1
3	26	A3EPPP3201	Cam			C	1
3	27	A3EPPPCQ00	Bracket			D	1
3	28	A3EPPP5600	Motor Assy	Receving roller retraction motor (M4)		C	1
3	29	A3EPPP5500	Motor Assy	Trailing edge stopper motor (M6)		C	1
3	30	A108M50100	Photointerrupter	Receving roller retraction sensor (PS11)		B	1
3	31	A3EPPP2M01	Bracket			D	1
3	32	A0EDM50100	Photoreflector	Saddle exit sensor (PS5)		I	1
3	33	A3EPPPC500	Wire Harness Assy			D	1
3	a	A3EPPPB101	Screw			D	
3	b	V218040086	E ring			V	
3	c	A3EPPPAV01	Screw			D	
3	d	V217030001	E Ring			V	
3	e	A3EPPPBA01	Screw			D	
3	f	A3EPPPAY01	Screw			D	
3	g	A3EPPPB601	Screw			D	

P 4

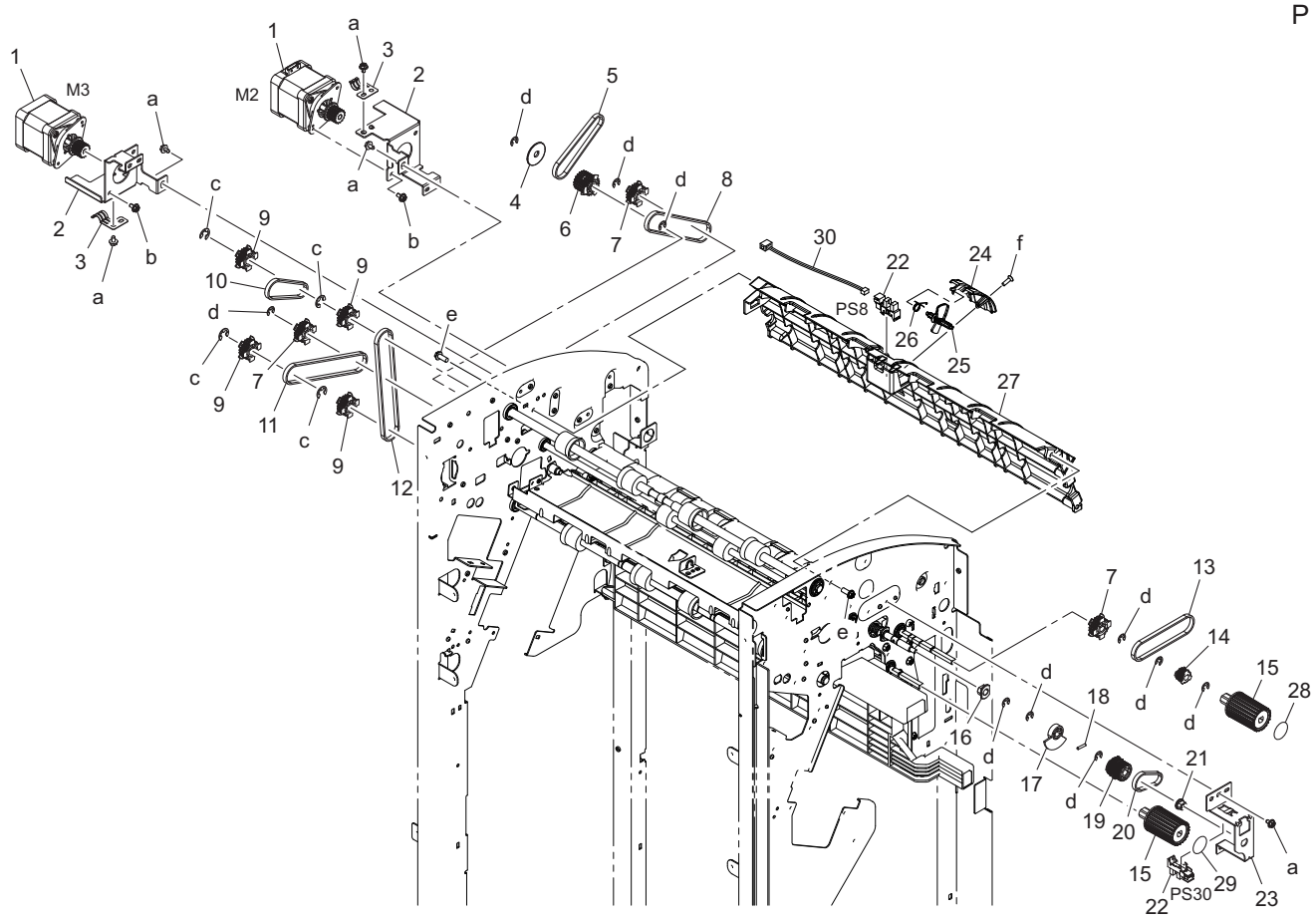

Page	Key	Parts No.	Description	Service Manual	Destinations	Class	Quantity
4	1	A3EPPP5301	Motor	FNS entry transport motor (M2) FNS discharge motor (M3)		C	2
4	2	A3EPPP2D01	Bracket			D	2

4	3	A3EPPP2C01	Plate Spring			C	2
4	4	A3EPPP3800	Flange			D	1
4	5	A3EPPP4P00	Timing Belt			C	1
4	6	A3EPPPBB00	Pulley Assy			C	1
4	7	A3EPPP2R01	Pulley			C	3
4	8	A3EPPP4M00	Timing Belt			C	1
4	9	A3EPPP2S00	Pulley			C	4
4	10	A3EPPP4Q00	Timing Belt			C	1
4	11	A3EPPP4L00	Timing Belt			C	1
4	12	A3EPPP4N00	Timing Belt			C	1
4	13	A3EPPP4K00	Timing Belt			C	1
4	14	A3EPPP3C00	Pulley			C	1
4	15	A3EPPP2V01	Roller			C	2
4	16	A3EPPP1101	Bushing			D	1
4	17	A3EPPP3D01	Cam			C	1
4	18	A3EPPPAQ01	Pin			D	1
4	19	A0HR213100	Pulley 28T			C	1
4	20	A3EPPP4U00	Timing Belt			C	1
4	21	A3EPPP1001	Bushing			D	1
4	22	A108M50100	Photointerrupter	Sub tray exit sensor (PS8) Exchange folded paper output sensor(PS30)		B	2
4	23	A3EPPP2H01	Bracket			D	1
4	24	A3EPPP3B00	Cover			C	1
4	25	A3EPPP3401	Actuator			C	1
4	26	A3EPPP4600	Torsion Coil spring			C	1
4	27	A3EPPP3A01	Guide			D	1
4	28	A3EPPPBK00	Label			D	1
4	29	A3EPPPBL00	Label			D	1
4	30	A3EPPPC601	Wire Harness Assy			D	1
4	a	A3EPPPB601	Screw			D	
4	b	A3EPPPB101	Screw			D	
4	c	V217060001	E Ring			V	
4	d	V217040001	E Ring			V	
4	e	A3EPPPB401	Screw			D	
4	f	A3EPPPAX01	Screw			D	

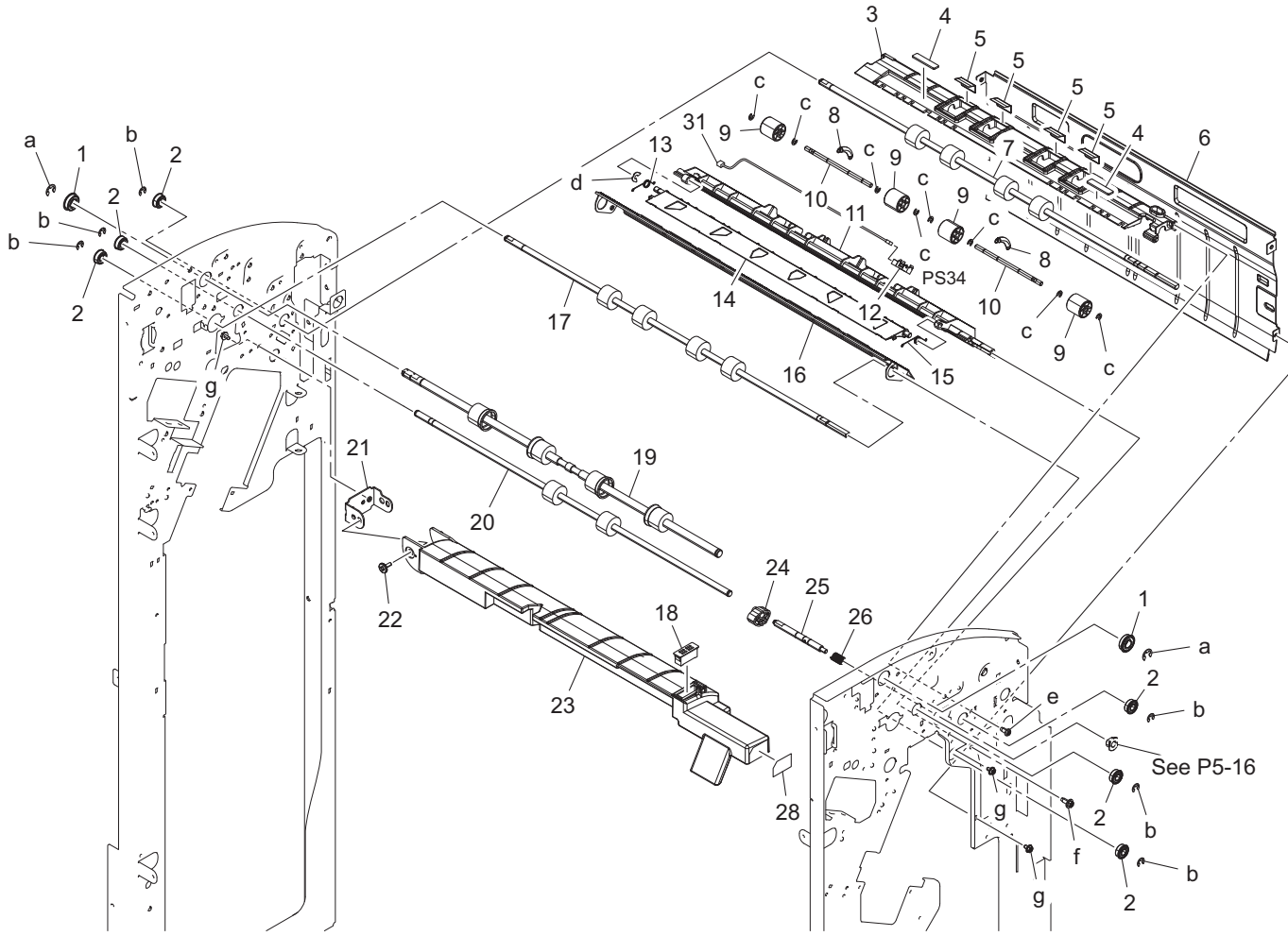

Page	Key	Parts No.	Description	Service Manual	Destinations	Class	Quantity
5	1	4004454001	BALL BEARING			B	2
5	2	A3EPPP1501	Ball Bearing			C	6
5	3	A3EPPP2X01	Guide			D	1
5	4	A3EPPP4V00	Sponge			C	2
5	5	A3EPPP4S01	Film			C	4
5	6	A3EPPP2B01	Guide			D	1
5	7	A3EPPP4F02	Roller			C	1
5	8	A3EPPP4302	Tension Spring			C	2
5	9	A3EPPP3702	Roll			C	4
5	10	A3EPPP3T00	Shaft			D	2
5	11	A3EPPP2T01	Guide			D	1
5	12	A0EDM50100	Photoreflector			I	1
5	13	A3EPPP4400	Torsion Coil spring			C	1
5	14	A3EPPP2U01	Guide Plate			C	1
5	15	A3EPPP4800	Torsion Coil spring			C	1
5	16	A3EPPP2F01	Guide			D	1
5	17	A3EPPP4E02	Roller			C	1
5	18	4030104002	CATCH			D	1
5	19	A3EPPP4J03	Roller			C	1
5	20	A3EPPP4G02	Roller			C	1
5	21	A3EPPP2K01	Hinge			D	1
5	22	A3EPPP5001	Screw			D	1
5	23	A3EPPP3500	Guide			D	1
5	24	A3EPPP3001	Cam			C	1
5	25	A3EPPP3V01	Shaft			D	1

5	26	A3EPPP4B00	Pressure Spring			C	1
5	28	A3EPPPBH00	Label			D	1
5	31	A3EPPPC401	Wire Harness Assy			D	1
5	a	V217060001	E Ring			V	
5	b	V217040001	E Ring			V	
5	c	V217030001	E Ring			V	
5	d	V218040086	E ring			V	
5	e	A3EPPPAU01	Screw			D	
5	f	A3EPPPB401	Screw			D	
5	g	A3EPPPB601	Screw			D	

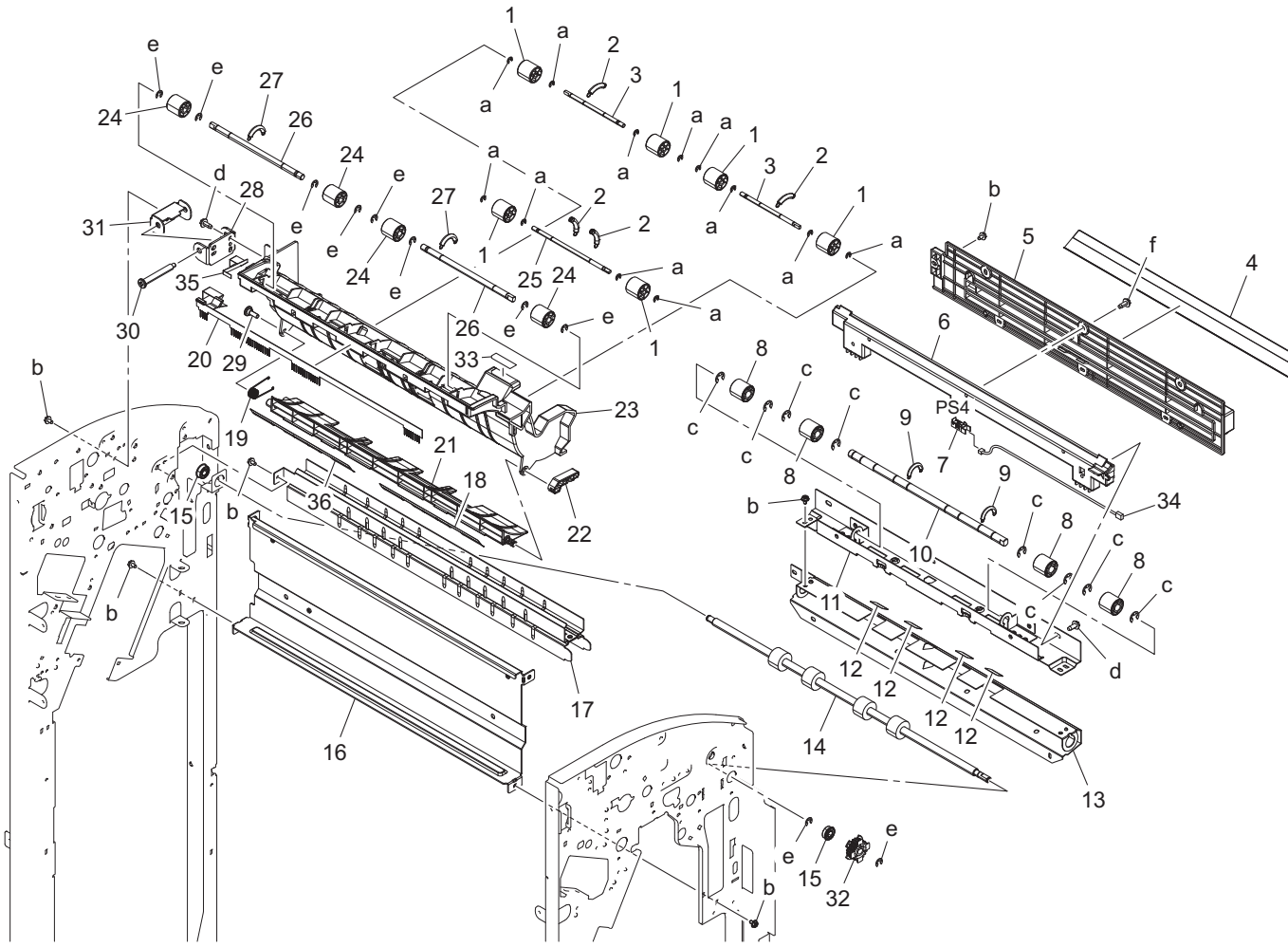

Page	Key	Parts No.	Description	Service Manual	Destinations	Class	Quantity
6	1	A3EPPP3702	Roll			C	6
6	2	A3EPPP4302	Tension Spring			C	4
6	3	A3EPPP4000	Shaft			D	2
6	4	A3EPPP4R01	Film			C	1
6	5	A3EPPP3E01	Guide			D	1
6	6	A3EPPP3G02	Guide			D	1
6	7	A0EDM50100	Photoreflector	FNS entrance sensor (PS4)		I	1
6	8	A3EPPP3H01	Roller			C	4
6	9	A3EPPP4202	Tension Spring			C	2
6	10	A3EPPP3S00	Shaft			D	1
6	11	A3EPPP2901	Guide Assy			D	1
6	12	A3EPPP4X01	Film			C	4
6	13	A3EPPP2801	Guide			D	1
6	14	A3EPPP4D02	Roller			C	1
6	15	A3EPPP1501	Ball Bearing			C	2

6	16	A3EPPP1E01	Reinforce Stay			D	1
6	17	A3EPPP2A02	Guide Assy			D	1
6	18	A3EPPP4T02	Film			C	1
6	19	A3EPPP4501	Torsion Coil spring			C	1
6	20	A3EPPP5701	Neuralizing Brush			C	1
6	21	A3EPPP2Y02	Guide Plate			C	1
6	22	A3EPPP3101	Lever			C	1
6	23	A3EPPP3302	Guide			D	1
6	24	A3EPPP3603	Roller			C	4
6	25	A3EPPP3U00	Shaft			D	1
6	26	A3EPPP3Y00	Shaft			D	2
6	27	A3EPPP4A02	Tension Spring			C	2
6	28	A3EPPP2E01	Bracket			D	1
6	29	A3EPPP4Y01	Screw			D	1
6	30	A3EPPP5101	Screw			D	1
6	31	A3EPPP2L01	Bracket			D	1
6	32	A3EPPP2R01	Pulley			C	1
6	33	A3EPPPBJ00	Label			D	1
6	34	A3EPPPC300	Wire Harness Assy			D	1
6	35	A3EPPPD500	Seal			C	1
6	36	A3EPPPD900	Film			D	1
6	a	V217030001	E Ring			V	
6	b	A3EPPPB601	Screw			D	
6	c	V217060001	E Ring			V	
6	d	A3EPPPB401	Screw			D	
6	e	V217040001	E Ring			V	
6	f	A3EPPPCN00	Screw			D	

6.4 ELEVATE SECTION

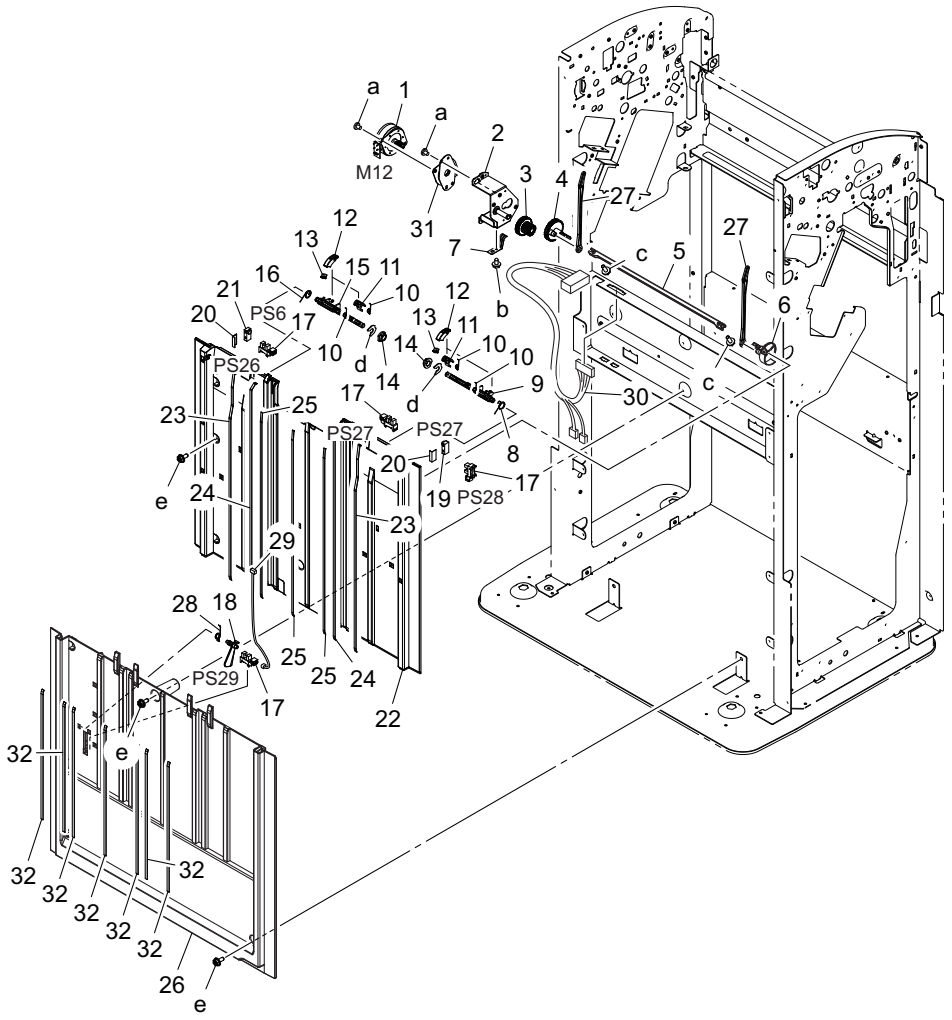

Page	Key	Parts No.	Description	Service Manual	Destinations	Class	Quantity
7	1	A3EPPPAA00	Motor	Paper receiving control motor (M12)		C	1
7	2	A3EPPPCY00	Mounting Plate			D	1
7	3	A3EPPPAD00	Gear			C	1
7	4	A3EPPPA401	Gear			C	1
7	5	A3EPPP9S02	Shaft			D	1
7	6	A3EPPPAC01	Actuator			C	1
7	7	A3EPPPA901	Plate Spring			D	1
7	8	A3EPPP9Y01	Torsion Spring			C	1
7	9	A3EPPPA302	Actuator			C	1
7	10	A3EPPP9X01	Torsion Spring			C	4
7	11	A3EPPPA101	Holder			C	2
7	12	A3EPPP9Q01	Holder			C	4
7	13	A3EPPP9T01	Cushion			C	4
7	14	A3EPPP1300	Bushing			D	2
7	15	A3EPPPA202	Actuator			C	1
7	16	A3EPPPA602	Torsion Spring			C	1
7	17	A108M50100	Photointerrupter	Main tray upper position sensor/R (PS26) Main tray upper position sensor/F (PS27) Paper delivery control sensor (PS28) Main tray full detection sensor (PS29)		B	4
7	18	A3EPPPA801	Actuator			C	1

7	19	A3EPPP2600	Photoreflector	Main tray upper sensor/in (PS7)		I	1
7	20	A3EPPPAH00	Seal			C	2
7	21	A3EPPP2700	Photoreflector	Main tray upper sensor/out (PS6)		I	1
7	22	A3EPPP9503	Cover			D	1
7	23	A3EPPPAG01	Slide Part			C	2
7	24	A3EPPPAF01	Slide Part			C	2
7	25	A3EPPPAE01	Slide Part			C	3
7	26	A3EPPP9U02	Cover			C	1
7	27	A3EPPP9R01	Arm			C	2
7	28	A3EPPPBS00	Torsion Coil spring			C	1
7	29	A3EPPPCH00	Wire Harness Assy			D	1
7	30	A3EPPPC100	Wire Harness Assy			D	1
7	31	A3EPPPAB01	Vibrating Plate			D	1
7	32	A3EPPPD700	Slide Part			C	7
7	a	A3EPPPAY01	Screw			D	
7	b	A3EPPPB601	Screw			D	
7	c	A3EPPPB201	Screw			D	
7	d	V217040001	E Ring			V	
7	e	A3EPPPB801	Screw			D	

P 8

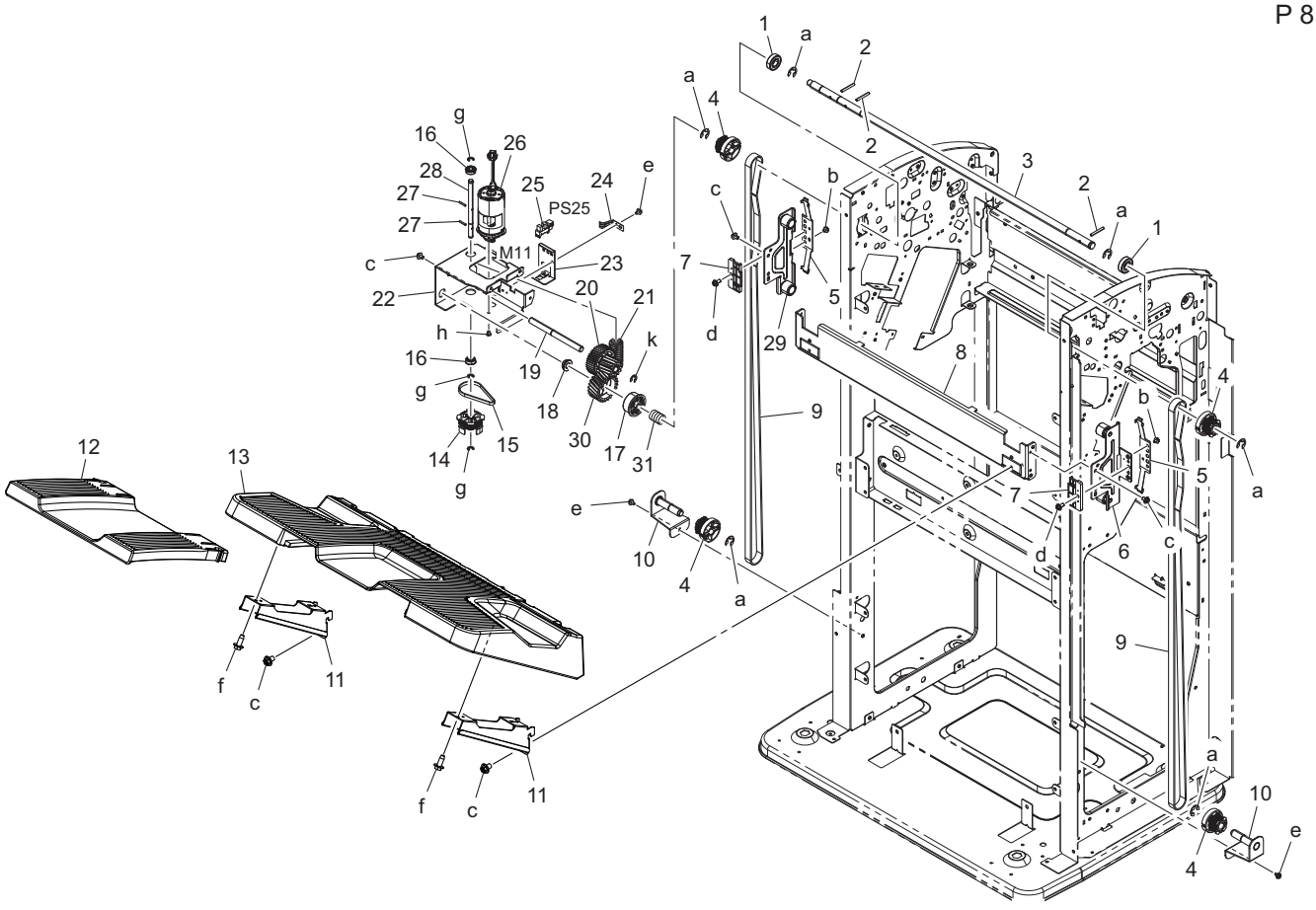

Page	Key	Parts No.	Description	Service Manual	Destinations	Class	Quantity
8	1	A3EPPPCF01	Ball Bearing			C	2
8	2	A3EPPPAS01	Pin			D	3
8	3	A3EPPP9B00	Shaft			D	1
8	4	A3EPPP9C00	Gear			C	4
8	5	A3EPPPA001	Plate Spring			D	2
8	6	A3EPPPD100	Support Plate Assy			D	1
8	7	A3EPPP9N01	Holder			D	2
8	8	A3EPPP9601	Mounting Plate			D	1
8	9	A3EPPP9900	Timing Belt			C	2

8	10	A3EPPPD000	Support Plate			D	2
8	11	A3EPPP9A01	Frame			D	2
8	12	A3EPPP1Y01	Tray			C	1
8	13	A3EPPP9P01	Tray			C	1
8	14	A3EPPP9L02	Pulley			C	1
8	15	A3EPPPBP00	Timing Belt			C	1
8	16	A3EPPP1501	Ball Bearing			C	2
8	17	A3EPPP9E00	Ratchet			C	1
8	18	A3EPPP1201	Bushing			D	1
8	19	A3EPPP9G00	Shaft			D	1
8	20	A3EPPP9H03	Gear			C	1
8	21	A3EPPP9J01	Worm Gear			C	1
8	22	A3EPPP9F03	Mounting Plate			D	1
8	23	A3EPPP9M01	Mounting Plate			D	1
8	24	A3EPPPA901	Plate Spring			D	1
8	25	A108M50100	Photointerrupter	Stacker motor sensor (PS25)		B	1
8	26	A3EPPPA702	Motor	Main tray up/down motor (M11)		C	1
8	27	A3EPPPAR01	Pin			D	2
8	28	A3EPPP9K00	Shaft			D	1
8	29	A3EPPPD200	Support Plate Assy			D	1
8	30	A3EPPP9D01	Gear			C	1
8	31	A3EPPPBR01	Pressure Spring			C	1
8	a	V217080001	E ring			V	
8	b	A3EPPPBN01	Screw			D	
8	c	A3EPPPBQ01	Screw			D	
8	d	A3EPPPCJ01	Screw			D	
8	e	A3EPPPB601	Screw			D	
8	f	A3EPPPB401	Screw			D	
8	g	V217040001	E Ring			V	
8	h	A3EPPPAY01	Screw			D	
8	k	V217060001	E Ring			V	

6.5 STAPLER SECTION

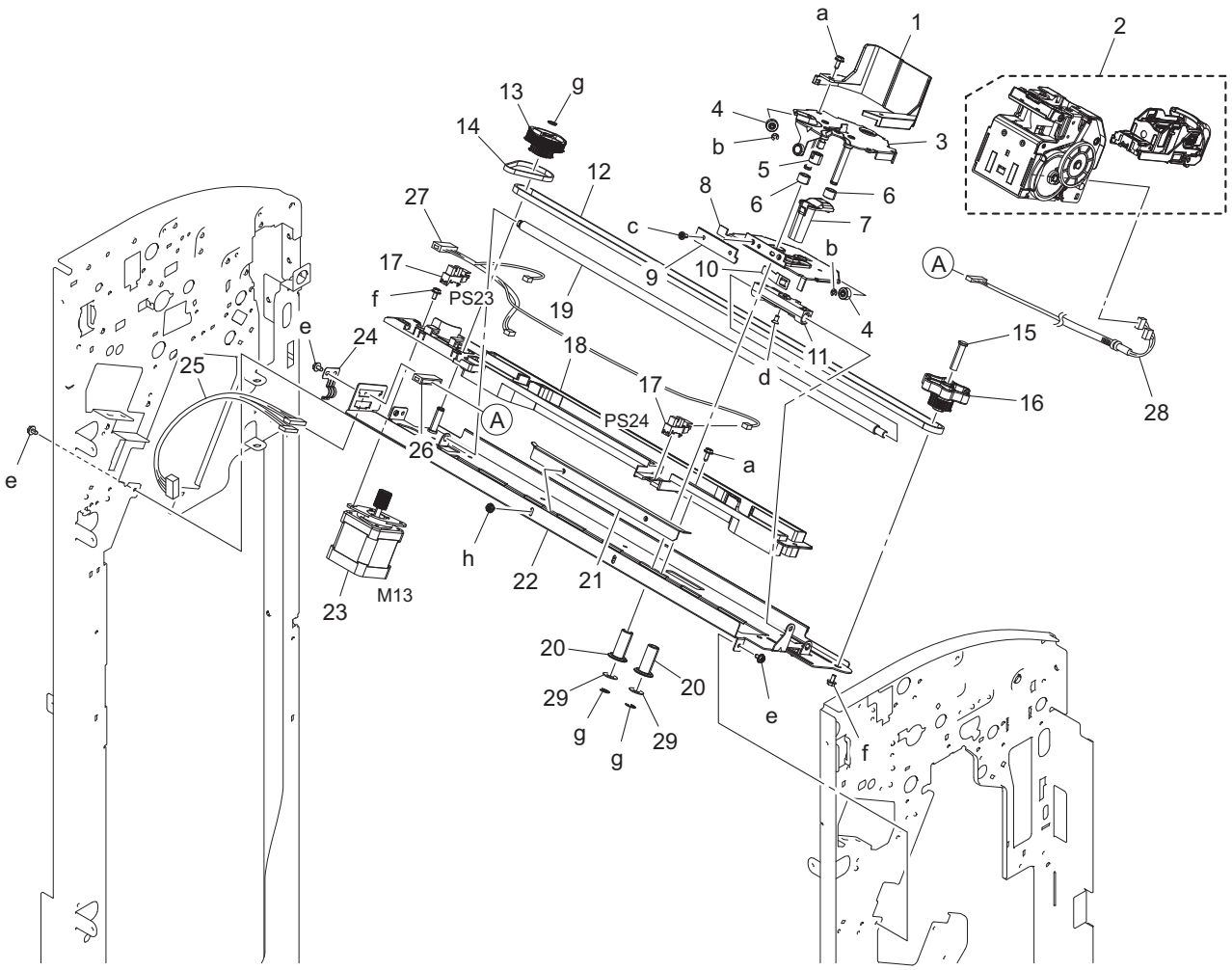

Page	Key	Parts No.	Description	Service Manual	Destinations	Class	Quantity
9	1	A3EPPP8Y01	Holder			D	1
9	2	9J08560101	STAPLER UNIT			C	1
9	3	A3EPPP8K02	Mounting Plate			D	1
9	4	A3EPPP9001	Roll			C	2
9	5	A3EPPP8L00	Collar			C	1
9	6	A3EPPP8N01	Roll			C	2
9	7	A3EPPP8P01	Holder			D	1
9	8	A3EPPP8J01	Mounting Plate			D	1
9	9	A3EPPP9301	Guide			D	1
9	10	A3EPPP8R01	Plate Spring			D	1
9	11	A3EPPP8Q01	Holder			D	1
9	12	A3EPPP8S00	Timing Belt			C	1
9	13	A3EPPP8V01	Gear			C	1
9	14	A3EPPP8T00	Timing Belt			C	1
9	15	A3EPPP9200	Shaft			D	1
9	16	A3EPPP8X02	Knob			C	1
9	17	A108M50100	Photointerrupter	Stapler home position sensor (Rear) (PS23) Stapler position sensor (Center) (PS24)		B	2
9	18	A3EPPP8H03	Holder			D	1
9	19	A3EPPP8U00	Shaft			D	1
9	20	A3EPPP8M02	Shaft			D	2
9	21	A3EPPP9402	Plate			D	1
9	22	A3EPPPCX00	Mounting Plate			D	1

9	23	A3EPPP9102	Motor	Side stapler movement motor (M13)		C	1
9	24	A3EPPP2C01	Plate Spring			C	1
9	25	A3EPPPBY00	Wire Harness Assy			D	1
9	26	A3EPPPCB00	Wire Harness Assy			D	1
9	27	A3EPPPCA01	Wire Harness Assy			D	1
9	28	A3EPPPCC01	Wire Harness Assy			D	1
9	29	A3EPPPDA00	Spacer			D	2
9	a	A3EPPPB701	Screw			D	
9	b	V217025001	E ring			V	
9	c	A3EPPPB001	Screw			D	
9	d	A3EPPPAV01	Screw			D	
9	e	A3EPPPB601	Screw			D	
9	f	A3EPPPB101	Screw			D	
9	g	V217040001	E Ring			V	
9	h	A3EPPPBN01	Screw			D	

6.6 PAPER EXIT SECTION

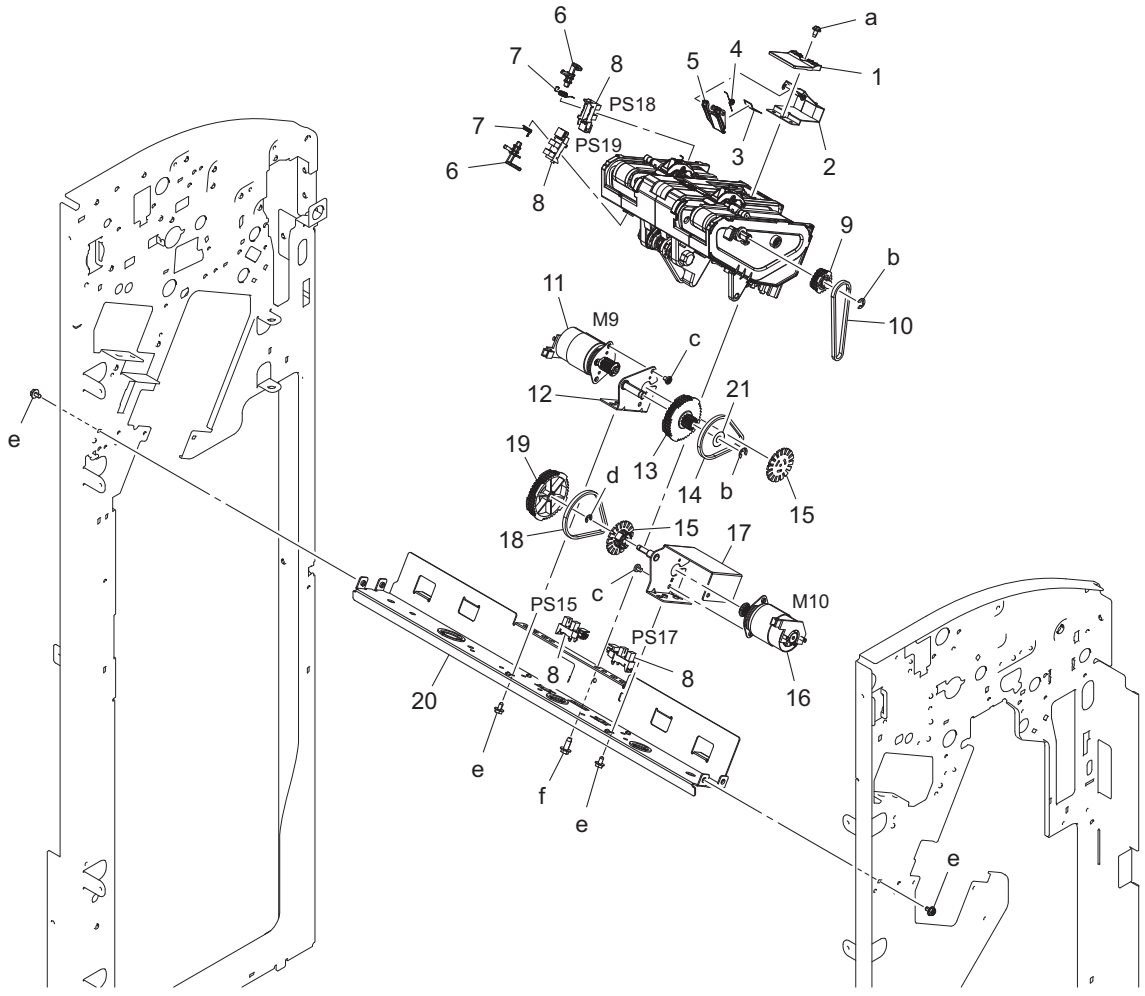

Page	Key	Parts No.	Description	Service Manual	Destinations	Class	Quantity
10	1	A3EPPP6T01	Cover			C	1
10	2	A3EPPP6S01	Bracket			C	1
10	3	A3EPPP8501	Film			C	1
10	4	A3EPPP8400	Torsion Coil spring			C	1
10	5	A3EPPP8201	Bracket			C	1
10	6	A3EPPP7P01	Actuator			C	2
10	7	A3EPPP7X01	Torsion Coil spring			C	2

10	8	A108M50100	Photointerrupter	Pre-eject encorder sensor (PS15) Gripper motor sensor (PS17) Gripper home position sensor (PS18) Gripper position detection sensor (PS19)		B	4
10	9	A3EPPP7Y01	Pulley			C	1
10	10	A3EPPP7S00	Timing Belt			C	1
10	11	A3EPPP8F00	Motor	Pre-eject drive motor (M9)		C	1
10	12	A3EPPPCV00	Bracket			D	1
10	13	A3EPPP7503	Pulley			C	1
10	14	A3EPPP7600	Timing Belt			C	1
10	15	A3EPPP7402	Detecting Plate			C	2
10	16	A3EPPP8E00	Motor Assy	Bundle eject motor (M10)		C	1
10	17	A3EPPP7R01	Bracket			D	1
10	18	A3EPPP8000	Timing Belt			C	1
10	19	A3EPPP8102	Pulley			C	1
10	20	A3EPPP7T02	Frame			D	1
10	21	A3EPPPD600	Flange			C	1
10	a	A3EPPPB901	Screw			D	
10	b	V217040001	E Ring			V	
10	c	A3EPPPAY01	Screw			D	
10	d	V217030001	E Ring			V	
10	e	A3EPPPB601	Screw			D	
10	f	A3EPPPB401	Screw			D	

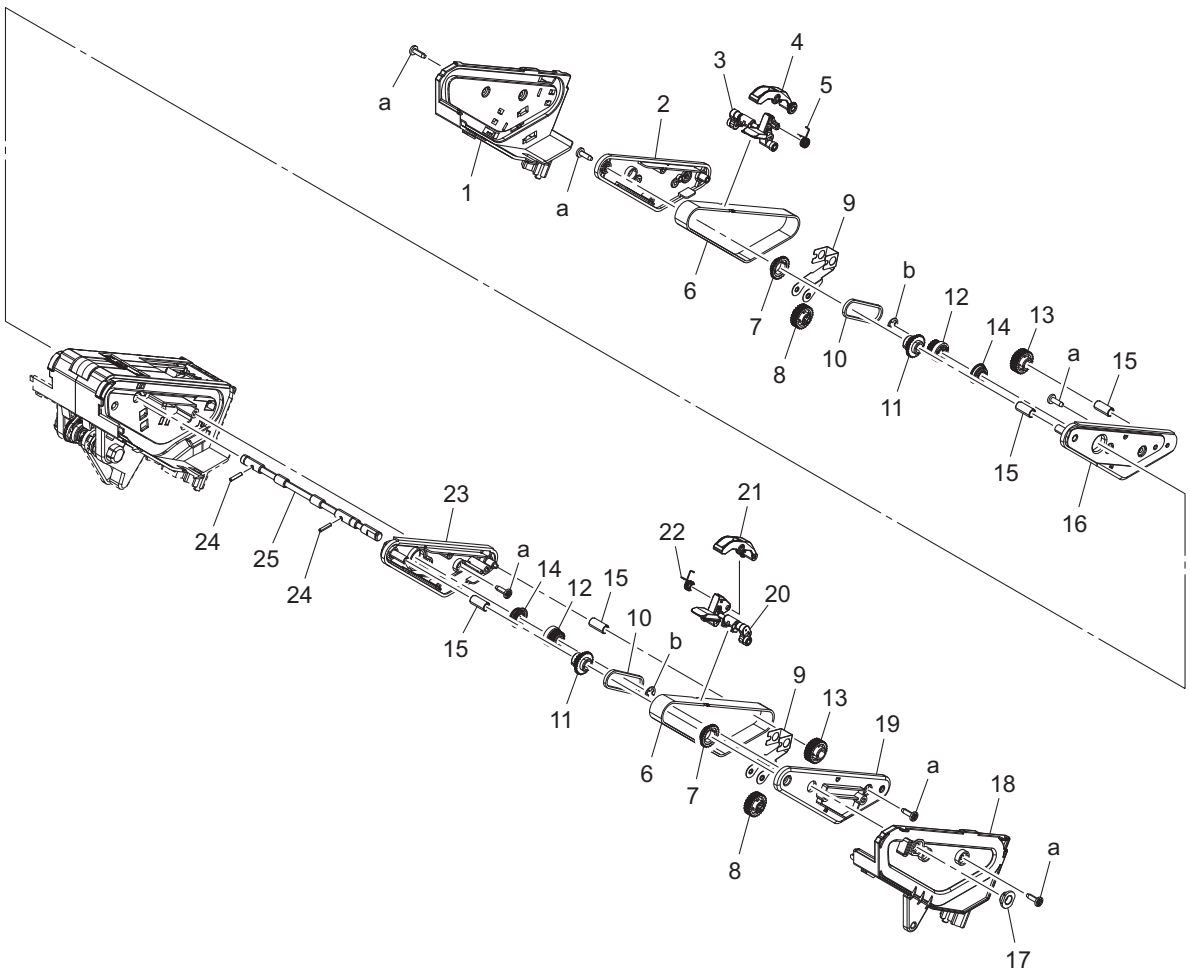

Page	Key	Parts No.	Description	Service Manual	Destinations	Class	Quantity
11	1	A3EPPP7N03	Frame			D	1

11	2	A3EPPP7K00	Frame			D	1
11	3	A3EPPPAJ00	Holder Assy			C	1
11	4	A3EPPPAN00	Arm			C	1
11	5	A3EPPP7V01	Torsion Coil spring			C	1
11	6	A3EPPP7H00	Timing Belt			C	2
11	7	A3EPPP7A01	Pulley			C	2
11	8	A3EPPP7G00	Pulley			C	2
11	9	A3EPPP7F01	Bracket			D	2
11	10	A3EPPP7E00	Timing Belt			C	2
11	11	A3EPPP7B03	Pulley			C	2
11	12	A3EPPP7C02	Pulley			C	2
11	13	A3EPPP7D00	Pulley			C	2
11	14	A3EPPPAT00	Ball Bearing			C	2
11	15	A3EPPP7900	Shaft			C	4
11	16	A3EPPP7802	Frame			D	1
11	17	A3EPPP1300	Bushing			D	1
11	18	A3EPPP7M02	Frame			D	1
11	19	A3EPPP7J01	Frame			D	1
11	20	A3EPPPAK00	Belt Assy			C	1
11	21	A3EPPPAP00	Arm			C	1
11	22	A3EPPP7U01	Torsion Coil spring			C	1
11	23	A3EPPP7701	Frame			D	1
11	24	A3EPPPAQ01	Pin			D	2
11	25	A3EPPP7L02	Shaft			D	1
11	a	A3EPPPB501	Screw			D	
11	b	V217040001	E Ring			V	

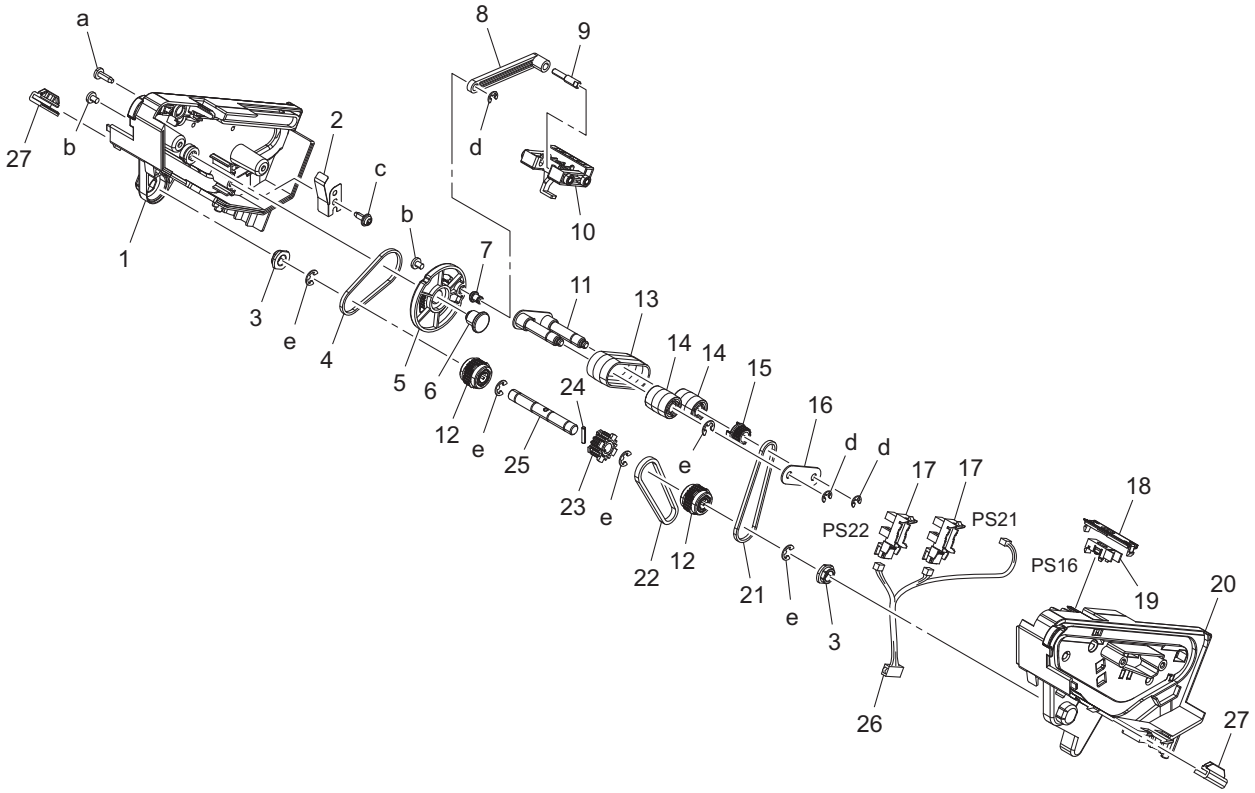

Page	Key	Parts No.	Description	Service Manual	Destinations	Class	Quantity
12	1	A3EPPP7302	Frame			D	1
12	2	A3EPPP8301	Plate Spring			C	1
12	3	A3EPPP1300	Bushing			D	2
12	4	A3EPPP8A00	Timing Belt			C	1
12	5	A3EPPP6U01	Pulley			C	1
12	6	A3EPPP6X00	Pin			D	1
12	7	A3EPPP6V01	Hinge			D	1
12	8	A3EPPP6R01	Arm			C	1
12	9	A3EPPP6Q00	Pin			C	1
12	10	A3EPPPAM00	Drum			C	1
12	11	A3EPPP8D01	Adjusting Plate Assy			D	1
12	12	A3EPPPAL00	Pulley			C	2
12	13	A3EPPP8701	Belt			C	1
12	14	A3EPPP8601	Roll			C	2
12	15	A3EPPP8900	Pulley			C	1
12	16	A3EPPP8802	Bracket			D	1
12	17	A108M50100	Photointerrupter	Pre-eject home sensor (PS21) Pre-eject away sensor (PS22)		B	2
12	18	A3EPPP8C01	Cover			C	1
12	19	A0EDM50100	Photoreflector	Main tray exit sensor (PS16)		I	1
12	20	A3EPPP7202	Frame			D	1
12	21	A3EPPP8B00	Timing Belt			C	1
12	22	A3EPPP7100	Timing Belt			C	1
12	23	A3EPPP7002	Pulley			C	1
12	24	A3EPPPAQ01	Pin			D	1
12	25	A3EPPP6Y01	Shaft			D	1
12	26	A3EPPPC801	Wire Harness Assy			D	1
12	27	A3EPPPD800	Guide			D	2
12	a	A3EPPPB501	Screw			D	
12	b	A3EPPPAY01	Screw			D	
12	c	A3EPPPBA01	Screw			D	
12	d	V217030001	E Ring			V	
12	e	V217040001	E Ring			V	

6.7 COMPILE SECTION

P 13

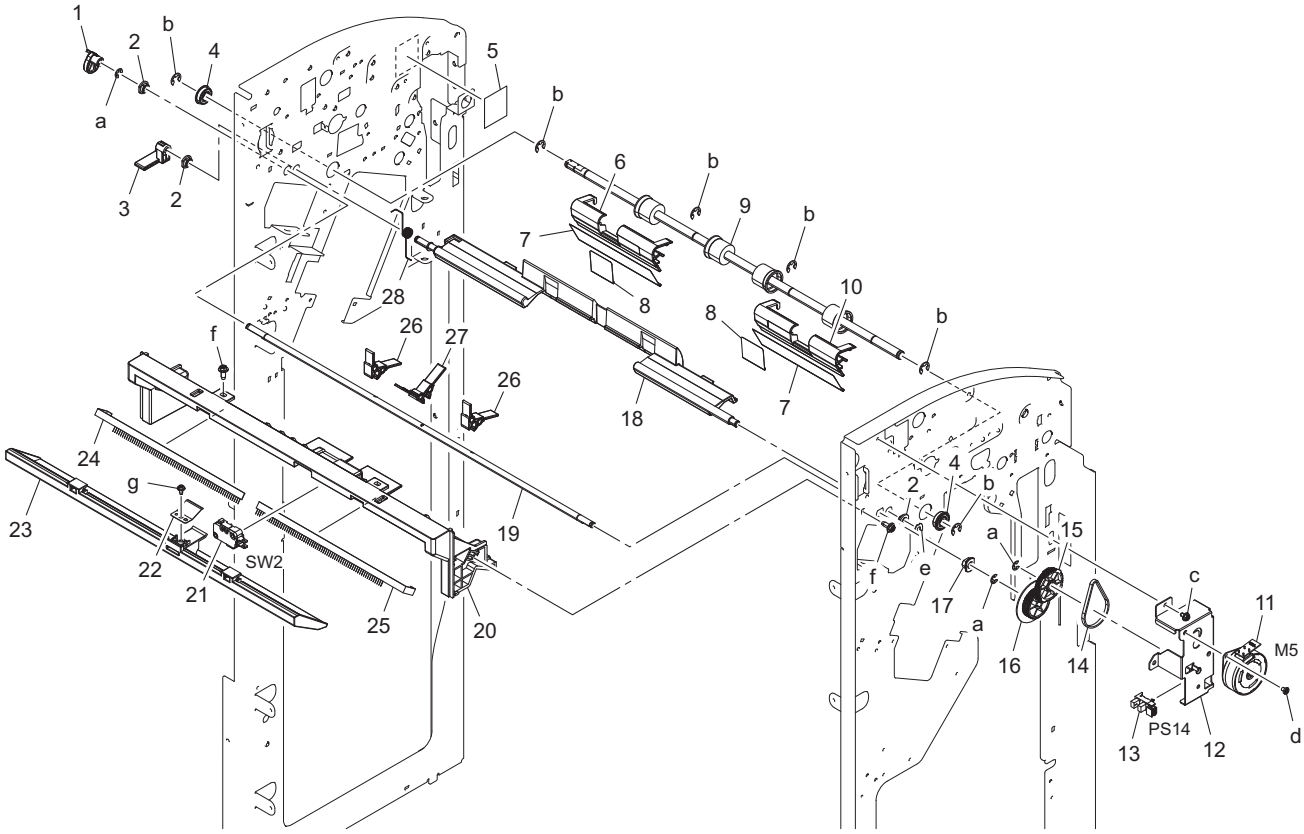

Page	Key	Parts No.	Description	Service Manual	Destinations	Class	Quantity
13	1	A3EPPP5E01	Cam			C	1
13	2	A3EPPP1300	Bushing			D	3
13	3	A3EPPP5G01	Actuator			C	1
13	4	4004454001	BALL BEARING			B	2
13	5	A3EPPPBC00	Label			D	1
13	6	A3EPPP6B01	Guide Plate			C	1
13	7	A3EPPP6M01	Film			C	2
13	8	A3EPPP6K01	Film			C	2
13	9	A3EPPP4H03	Roller			C	1
13	10	A3EPPP6A01	Guide Plate			C	1
13	11	A3EPPP5500	Motor Assy	FNS paddle motor (M5)		C	1
13	12	A3EPPPCS00	Bracket			D	1
13	13	A108M50100	Photointerrupter	Upper paddle home position detection sensor (PS14)		B	1
13	14	A3EPPP5H00	Timing Belt			C	1
13	15	A3EPPP6C02	Gear			C	1
13	16	A3EPPP5B00	Gear			C	1
13	17	A3EPPP1101	Bushing			D	1
13	18	A3EPPP5F02	Guide Plate			D	1
13	19	A3EPPP5801	Shaft			D	1
13	20	A3EPPP5J02	Guide Plate			C	1
13	21	A3EPPPCR00	Micro Switch	Main tray upper position detect switch (SW2)		C	1
13	22	A3EPPP6902	Plate Spring			C	1
13	23	A3EPPP6801	Guide			D	1
13	24	A3EPPP6N01	Neuralizing Brush			C	1
13	25	A3EPPP6P01	Neuralizing Brush			C	1
13	26	A3EPPPD300	Paddle Assy			C	2

13	27	A3EPPPD400	Paddle Assy			C	1
13	28	A3EPPP6000	Torsion Coil spring			C	1
13	a	V217040001	E Ring			V	
13	b	V217060001	E Ring			V	
13	c	A3EPPPB601	Screw			D	
13	d	A3EPPPAY01	Screw			D	
13	e	V218040086	E ring			V	
13	f	A3EPPPB401	Screw			D	
13	g	A3EPPPB901	Screw			D	

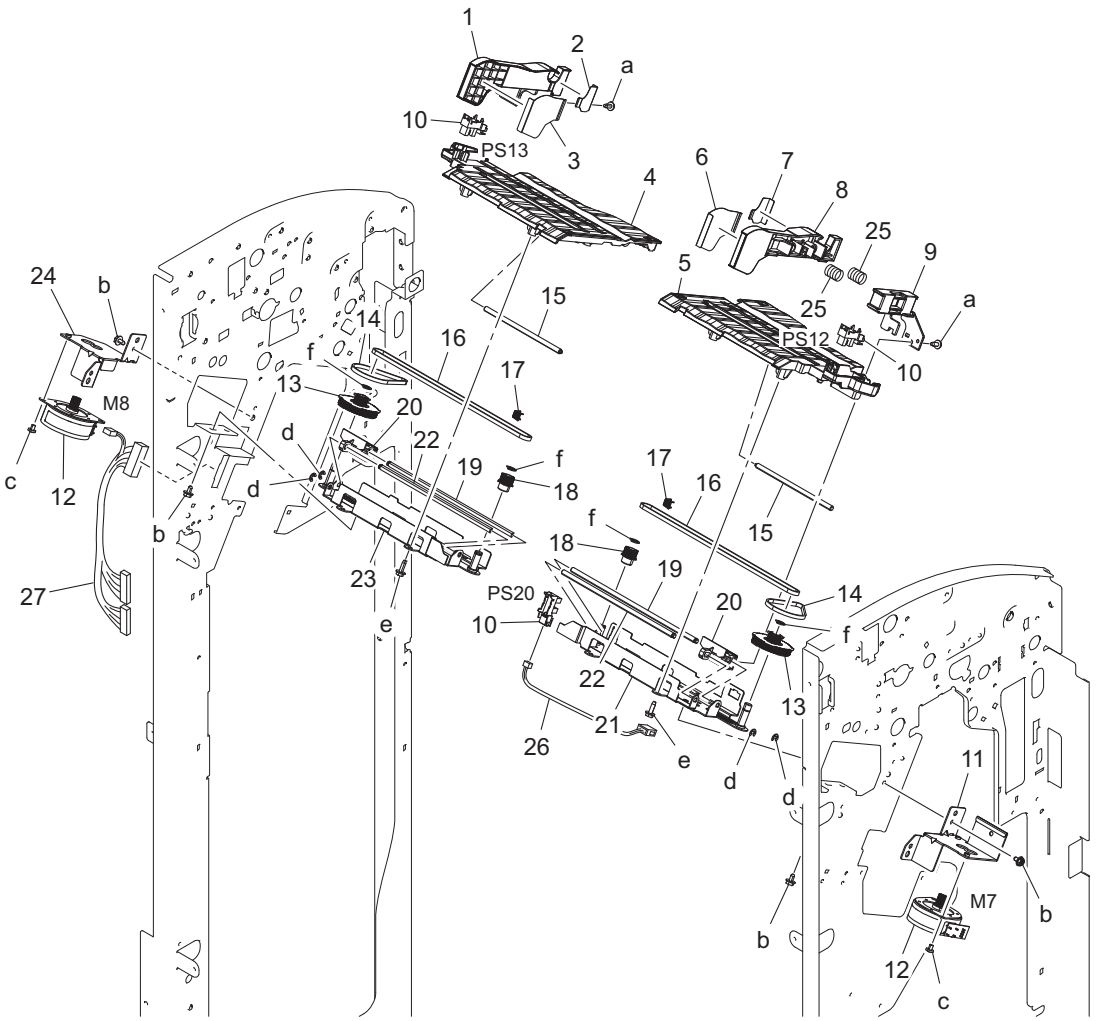

Page	Key	Parts No.	Description	Service Manual	Destinations	Class	Quantity
14	1	A3EPPP6300	Regulating Plate			C	1
14	2	A3EPPP6501	Reinforce Plate			C	1
14	3	A3EPPP6401	Reinforce Plate			C	1
14	4	A3EPPP6201	Cover			C	1
14	5	A3EPPP5U01	Cover			C	1
14	6	A3EPPP5V01	Reinforce Plate			C	1
14	7	A3EPPP5X01	Reinforce Plate			C	1
14	8	A3EPPP5P00	Regulating Plate			C	1
14	9	A3EPPP5N01	Cover			C	1
14	10	A108M50100	Photointerrupter	Trailing edge stopper home position detection sensor (PS20) Alignment plate/F home sensor (PS12) Alignment plate/R home sensor (PS13)		B	3
14	11	A3EPPP5Y01	Bracket			D	1
14	12	A3EPPP5500	Motor Assy	Alignment motor/Front (M7)		C	2

				Alignment motor/Rear (M8)			
14	13	A3EPPP5R01	Pulley			C	2
14	14	A3EPPP5C00	Timing Belt			C	2
14	15	A3EPPP6J00	Shaft			D	2
14	16	A3EPPP5Q00	Timing Belt			C	2
14	17	A3EPPP6701	Torsion Coil spring			C	2
14	18	A3EPPP5T02	Pulley			C	2
14	19	A3EPPP5K00	Shaft			D	2
14	20	A3EPPP5M01	Drum			C	2
14	21	A3EPPPCT00	Frame			D	1
14	22	A3EPPP5L00	Shaft			D	2
14	23	A3EPPPCU00	Frame			D	1
14	24	A3EPPP6601	Bracket			D	1
14	25	A3EPPPBM01	Pressure Spring			C	2
14	26	A3EPPPC700	Wire Harness Assy			D	1
14	27	A3EPPPC000	Wire Harness Assy			D	1
14	a	A3EPPPBA01	Screw			D	
14	b	A3EPPPB601	Screw			D	
14	c	A3EPPPAY01	Screw			D	
14	d	V217030001	E Ring			V	
14	e	A3EPPPB301	Screw			D	
14	f	V217040001	E Ring			V	

6.8 HORIZONTAL TRANSPORT SECTION

P 15

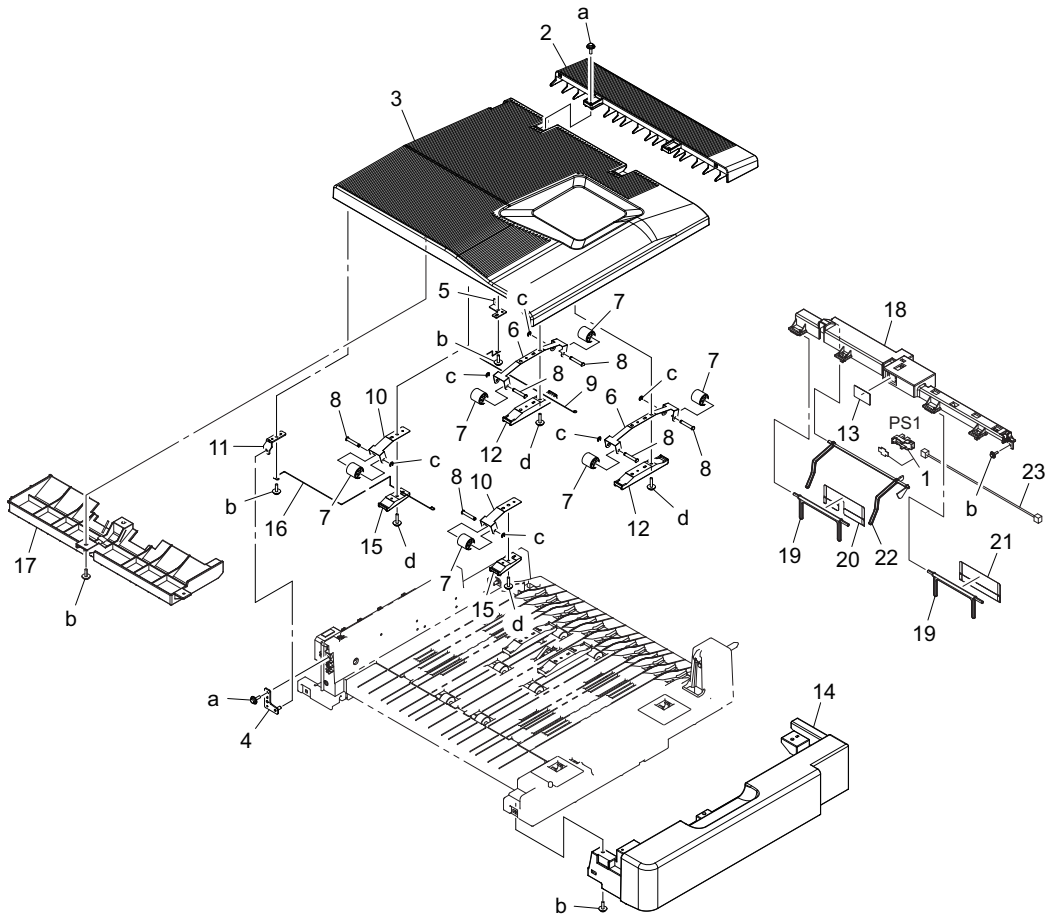

Page	Key	Parts No.	Description	Service Manual	Destinations	Class	Quantity
15	1	A108R90000	PHOTO INTERRUPTER			I	1
15	2	A3EP820100	Guide /1			C	1
15	3	A3EP819001	Guide /Upper			C	1
15	4	A3EP811100	Support Plate /1			D	1

15	5	A3EP811800	Support Plate /4			D	1
15	6	A3EP812500	Idler Plate spring /2			D	2
15	7	A0HR212700	Idler Roll /1			C	6
15	8	A3EP812100	Idler Shaft /1			D	6
15	9	A3EP814300	Ground Spring /2			C	1
15	10	A3EP812200	Idler Plate spring /1			D	2
15	11	A3EP811201	Support Plate /2			D	1
15	12	A3EP822800	Holding Part /1			D	2
15	13	A3EP822600	Sheet			D	1
15	14	A3EP814600	Cover /Front			C	1
15	15	A3EP822900	Holding Part /2			D	2
15	16	A3EP814200	Ground Spring /1			C	1
15	17	A3EP822100	Guide /7			C	1
15	18	A3EP822201	Holder			D	1
15	19	A3EP822300	Holding Part /1			D	2
15	20	A3EP822500	Holding Sheet /2			D	1
15	21	A3EP822400	Holding Sheet /1			D	1
15	22	A3EP822700	Lever			D	1
15	23	A3EPN10200	Sensor Relay harness			D	1
15	a	V153030804	screw			V	
15	b	V153030803	Screw			V	
15	c	V217030001	E Ring			V	
15	d	V153031003	screw			V	

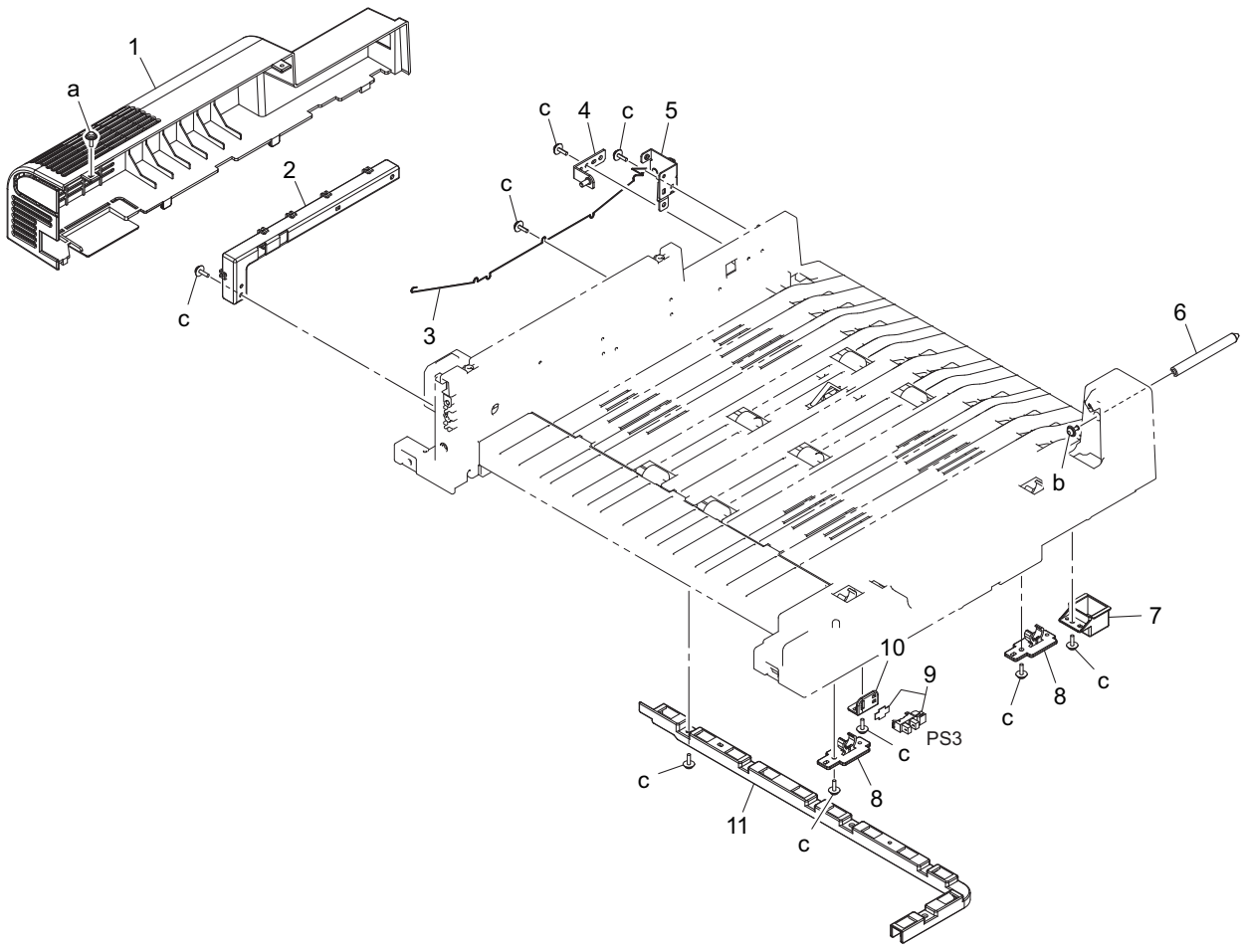

Page	Key	Parts No.	Description	Service Manual	Destinations	Class	Quantity
16	1	A3EP814700	Cover /Rear			C	1
16	2	A3EP812000	Regulating Part /1			D	1

16	3	A3EP815500	Ground Spring /3			C	1
16	4	A3EP811700	Support Plate /3			D	1
16	5	A3EP815000	Fixing Plate /3			D	1
16	6	A3EP815200	Positioning Shaft /2			D	1
16	7	A3EP821800	Cover Part			D	1
16	8	A3EP813900	Lock Part /2			C	2
16	9	A108R90000	PHOTO INTERRUPTER	RU cover open/close detection sensor (PS3)		I	1
16	10	A0HR701200	Mounting Plate			D	1
16	11	A3EP821600	Regulating Part /3			D	1
16	a	V153030804	screw			V	
16	b	V121030604	Screw			V	
16	c	V153030803	Screw			V	

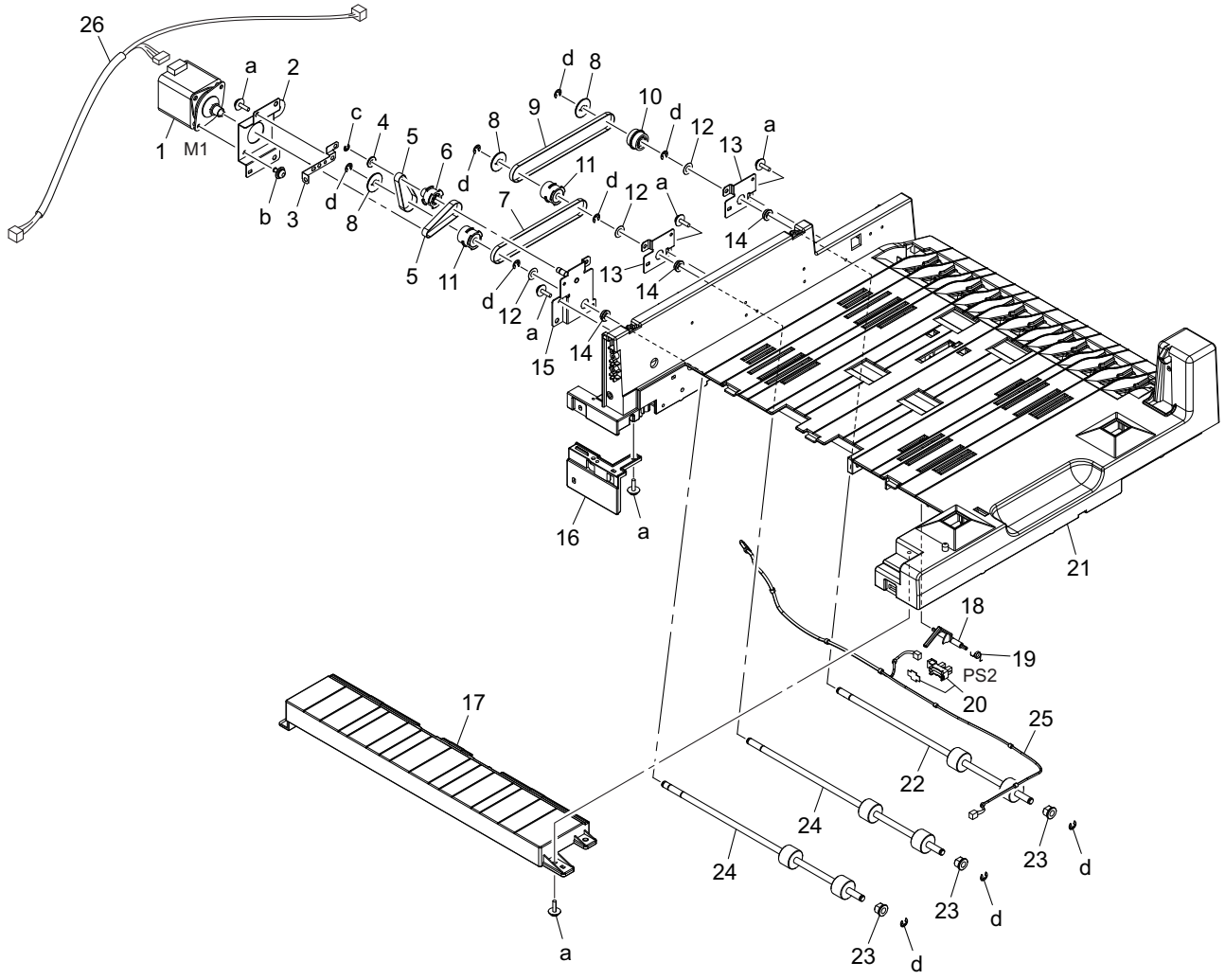

Page	Key	Parts No.	Description	Service Manual	Destinations	Class	Quantity
17	1	A0HRM10000	Stepping motor	RU transport motor (M1)		C	1
17	2	A3EP810700	Mounting Plate /1			D	1
17	3	A3EP815400	Ground Plate /3			D	1
17	4	A0HR213600	Flange			C	1
17	5	A3EP810900	Belt/1 114L			C	2
17	6	A0HR210200	Pulley 14/26T			C	1
17	7	A3EP820300	Belt/3 276L			C	1
17	8	A0HR210300	Flange			C	3
17	9	A0HR210900	Drive Belt /2			C	1
17	10	A0HR211000	Pulley 28T			C	1
17	11	A3EP816200	Drive Pulley/1 28T			C	2
17	12	07BA15930	SPACER B			C	3

17	13	A3EP816500	Fixing Plate /5			D	2
17	14	A00J617800	BALL BEARING			C	3
17	15	A3EP810800	Fixing Plate /1			D	1
17	16	A3EP814800	Fixing Part /2			C	1
17	17	A3EP814900	Guide /6			C	1
17	18	A3EP819801	Actuator			C	1
17	19	A3EP821700	Sensor Spring /1			C	1
17	20	A108R90000	PHOTO INTERRUPTER	RU entrance sensor (PS2)		I	1
17	21	A3EP810001	Guide /Lower			D	1
17	22	A3EP810600	Roller /1			C	1
17	23	A3EP822000	Bushing			D	3
17	24	A3EP811500	Roller /2			C	2
17	25	A3EPN10100	Sensor Relay harness			D	1
17	26	A3EPN10000	I/F Wiring			D	1
17	a	V153030803	Screw			V	
17	b	V116030603	Screw			V	
17	c	V217030001	E Ring			V	
17	d	V217040001	E Ring			V	

6.9 WIRING

P 18

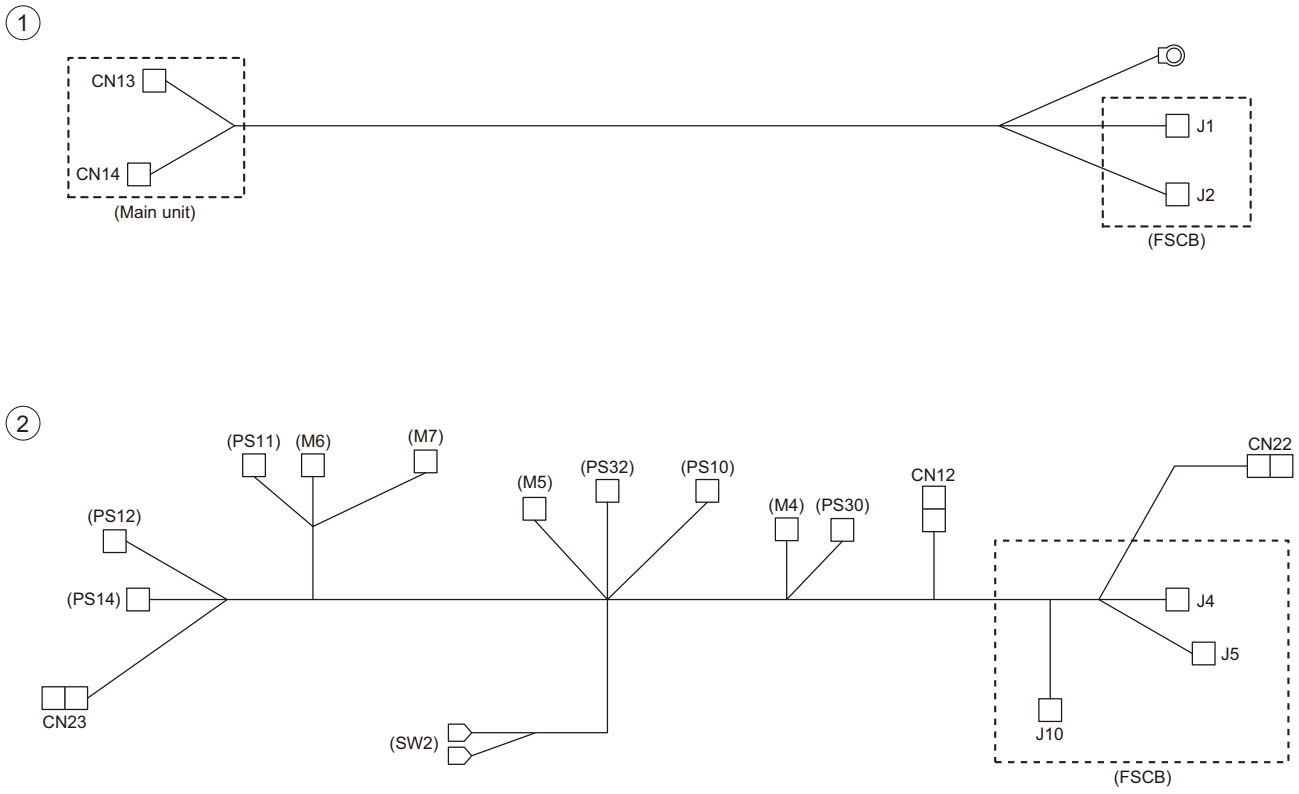

Page	Key	Parts No.	Description	Service Manual	Destinations	Class	Quantity
18	1	A3EPPPBF01	Harness Assy			D	1
18	2	A3EPPPBU01	Wire Harness Assy			D	1

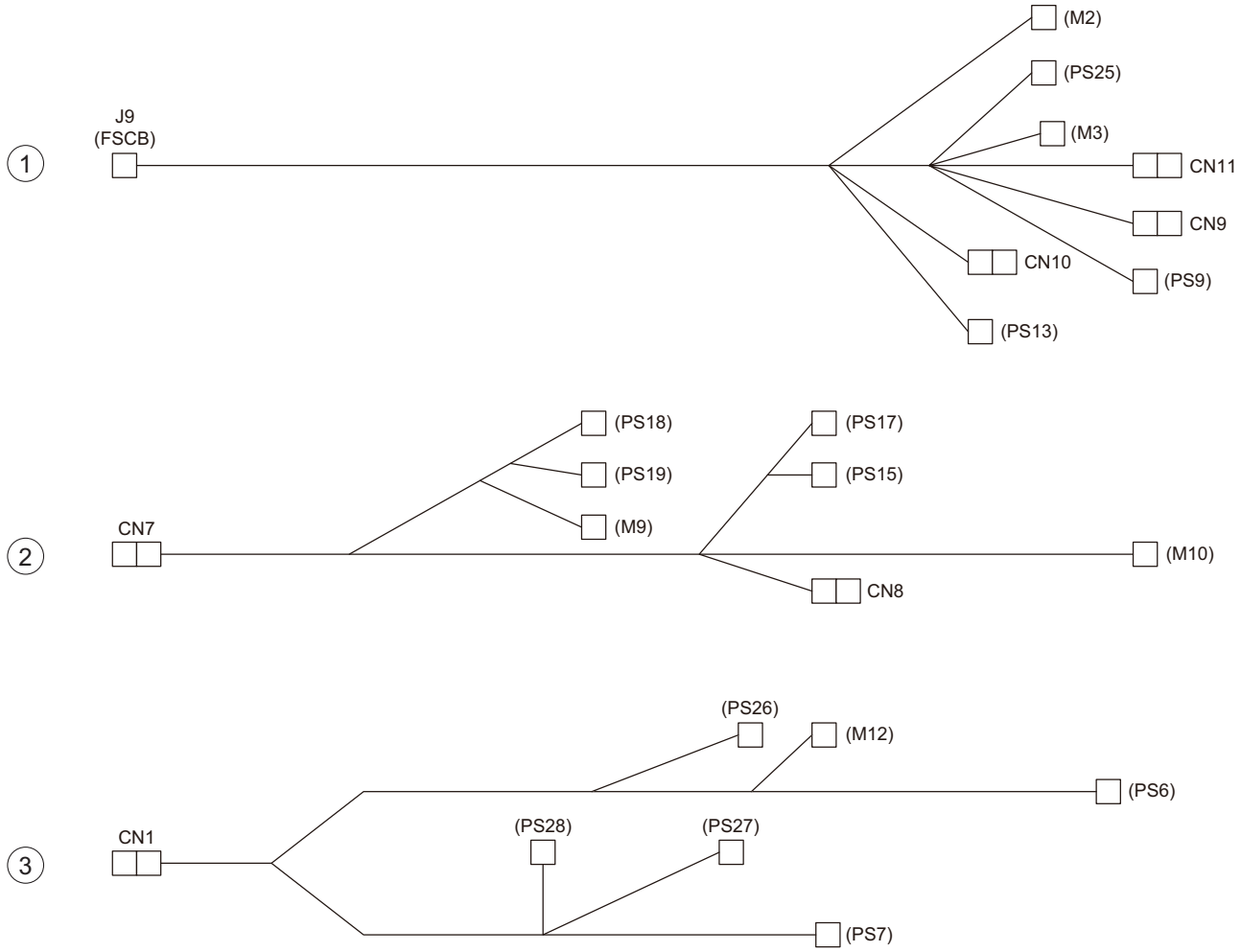

Page	Key	Parts No.	Description	Service Manual	Destinations	Class	Quantity
19	1	A3EPPPBX01	Wire Harness Assy			D	1
19	2	A3EPPPC900	Wire Harness Assy			D	1
19	3	A3EPPPCM00	Wire Harness Assy			D	1

6.10 WIRING ACCESSORIES AND JIGS

1 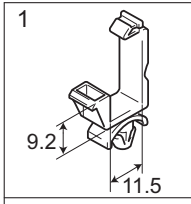	6 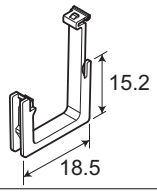	11	16	21	26	31	36
2 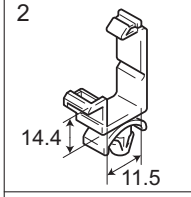	7	12	17	22	27	32	37
3 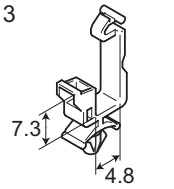	8	13	18	23	28	33	38
4 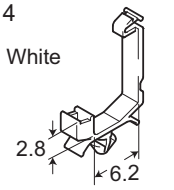	9	14	19	24	29	34	39
5 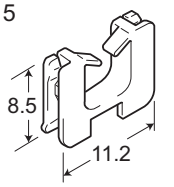	10	15	20	25	30	35	40

Page	Key	Parts No.	Description	Service Manual	Destinations	Class	Quantity
20	1	V500010005	saddle			D	
20	2	V500010007	saddle			D	
20	3	V500010020	Saddle			D	
20	4	V500010046	saddle			D	
20	5	V570010021	Saddle			D	
20	6	V570010026	saddle			D	

6.11 ACCESSORY PARTS

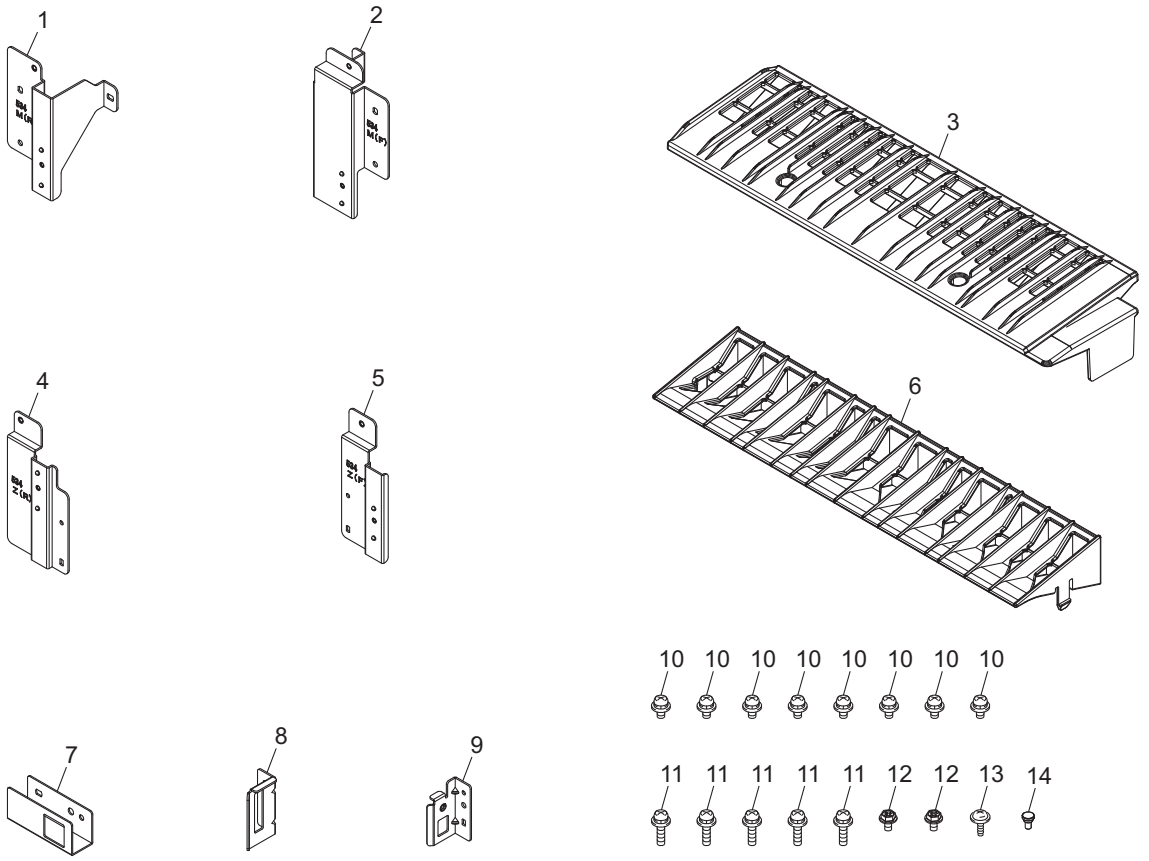

Page	Key	Parts No.	Description	Service Manual	Destinations	Class	Quantity
21	1	A3EP115100	Mounting Plate /Rear			D	1
21	2	A3EP115001	Mounting Plate /Front			D	1
21	3	A3EP810500	Guide /3			C	1
21	4	A3EP116500	Mounting Plate /Rear			D	1
21	5	A3EP116400	Mounting Plate /Front			D	1
21	6	A3EP810400	Guide /2			C	1
21	7	A3EP957100	Mounting Plate			D	1
21	8	A3EPPP1C01	Mounting Plate			D	1
21	9	A3EPPP1D01	Mounting Plate			D	1
21	10	V116040803	Screw			V	8
21	11	V116031603	Screw			V	5
21	12	A3EPPPB101	Screw			D	2
21	13	V153030803	Screw			V	1
21	14	A02E193400	Shoulder screw			C	1

6.12 DESTINATION

Destination No.		Destinations	V	Hz	Model No.
A	A1	JAPAN	100	50/60	A3EPWY1
	A2	JAPAN			
B		USA, CANADA	120	60	A3EPWY1
C		EUROPEAN TYPE	220-240	50/60	A3EPWY1

D	D1	S.E ASIA TYPE	THAILAND,SRI LANKA,SINGAPORE,MALAYSIA,HONGKONG, PAKISTAN,INDIA,BANGLADESH,INDONESIA	220-240	50/60	A3EPWY1
	D3	OCEAINA TYPE	AUSTRALIA,NEW ZEALAND	220-240	50/60	A3EPWY1
E		PHILIPPINES		220-240	50/60	A3EPWY1
F	F1	SAUDI ARABIA				
	F2	SAUDI ARABIA		220-240	50/60	A3EPWY1
G	G1	C.S AMERICA		220-240	50/60	A3EPWY1
	G2	C.S AMERICA		120	60	A3EPWY1
H		TAIWAN		110	60	A3EPWY1
I		JORDAN, LEBANON, SYRIA, SOUTH AFRICA, IRAQ, IRAN, N.YEMEN, CAMEROON, UAE, BAHRAIN, OMAN, QATAR, KUWAIT, KENYA, TUNISIA, IVORY COAST, MOROCCO		220-240	50/60	A3EPWY1
J		CHINA		220-240	50/60	A3EPWY1
K		KOREA		220-240	50/60	A3EPWY1

7. SORTER/FINISHER (SD-511)

7.1 EXTERNAL PARTS

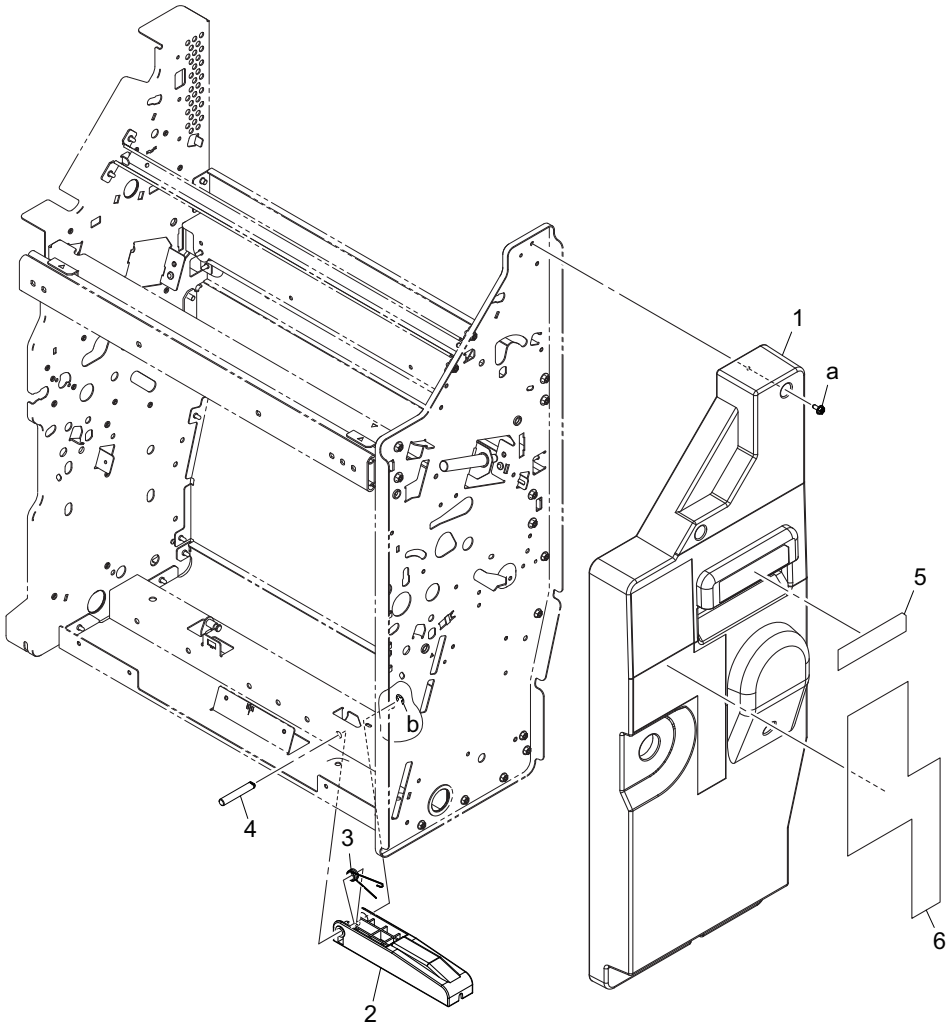

Page	Key	Parts No.	Description	Service Manual	Destinations	Class	Quantity
1	1	A3ERPP1E01	Cover/Front			C	1
1	2	A3ERPP1G01	Lever			C	1
1	3	A3ERPP1P00	Torsion Spring			C	1
1	4	A3ERPP1M00	Shaft			D	1
1	5	A3ERPP6Q00	Label			D	1
1	6	A3ERPP6P01	Label			D	1
1	a	A3EPPPB801	Screw			D	
1	b	V217040001	E Ring			V	

7.2 FRAME SECTION

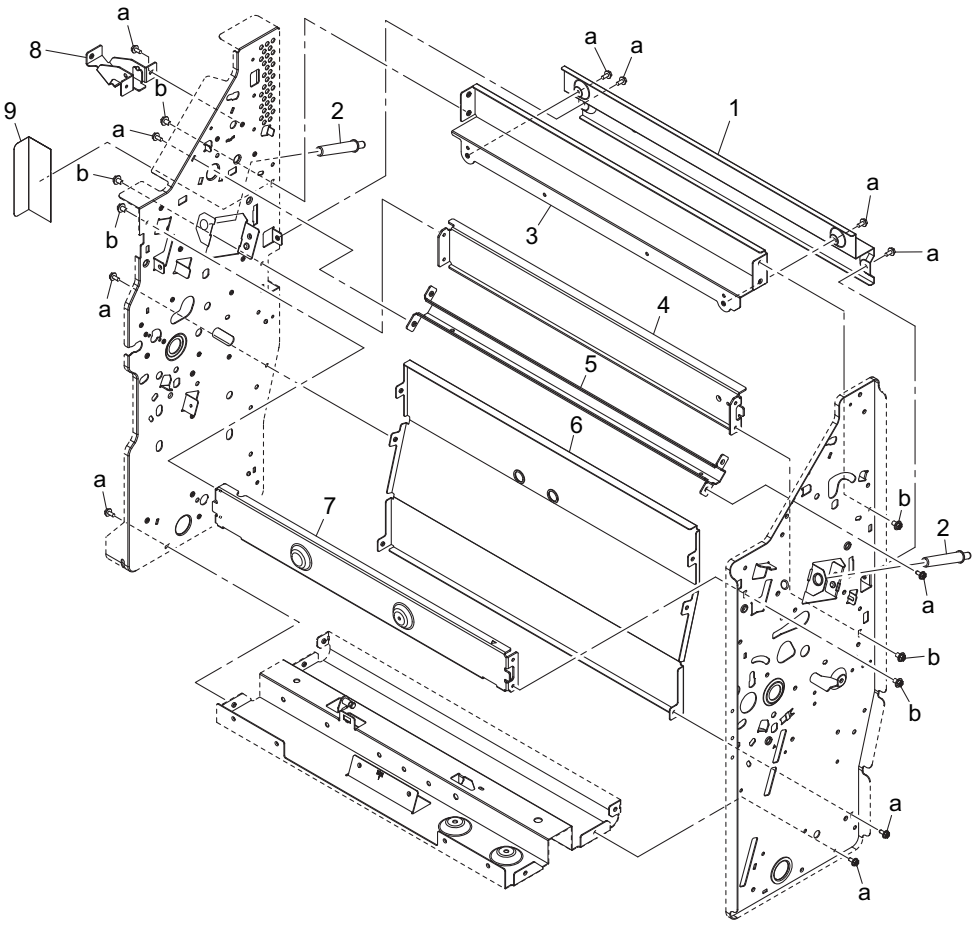

Page	Key	Parts No.	Description	Service Manual	Destinations	Class	Quantity
2	1	A3ERPP1F01	Mounting Plate			D	1
2	2	A3ERPP4P00	Shaft			D	2
2	3	A3ERPP1401	Stay			D	1
2	4	A3ERPP1301	Stay			D	1
2	5	A3ERPP1J01	Stay			D	1
2	6	A3ERPP1C01	Cover			D	1
2	7	A3ERPP1201	Stay			D	1
2	8	A3ERPP1801	Mounting Plate			D	1
2	9	A3ERPP1T00	Sheet			D	1
2	a	A3EPPPB601	Screw			D	
2	b	A3EPPPBQ01	Screw			D	

7.3 REAR FRAME SECTION

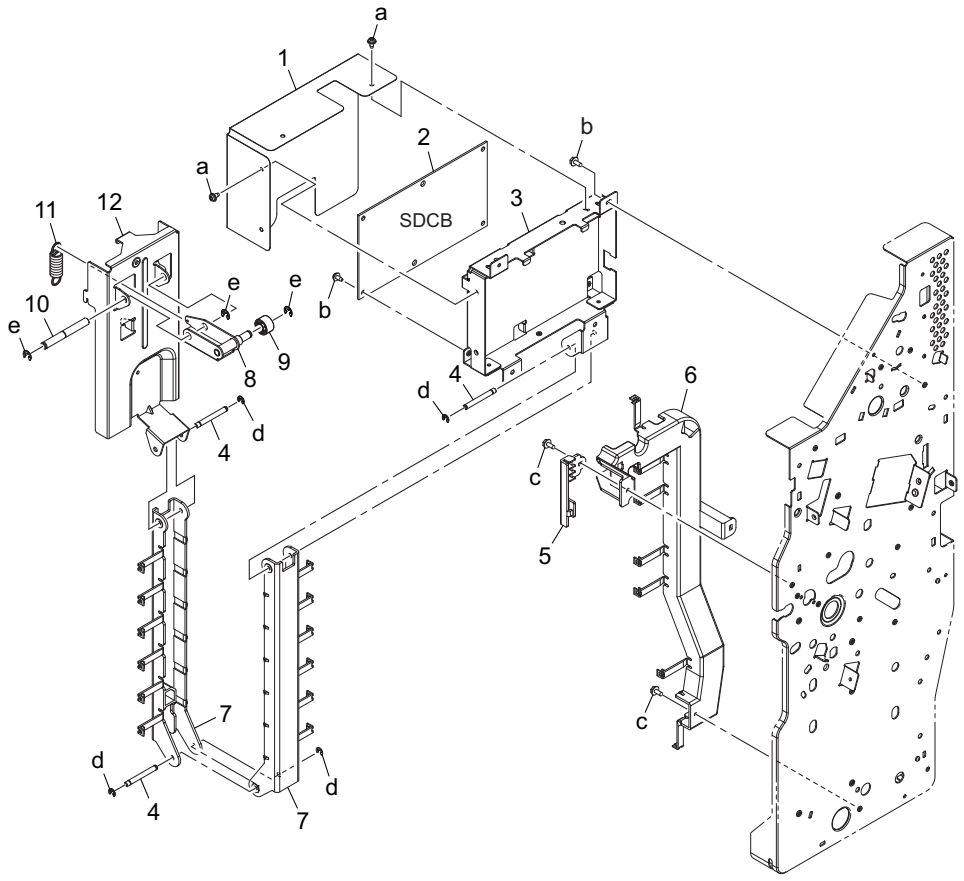

Page	Key	Parts No.	Description	Service Manual	Destinations	Class	Quantity
3	1	A3ERPP1R01	Sheet			C	1
3	2	A3ERPP6J01	PWB	SD drive board (SDDB)		I	1
3	3	A3ERPP1B02	Mounting Plate			D	1
3	4	A3ERPP1K00	Shaft			D	3
3	5	A3ERPP1S01	Cover			D	1
3	6	A3ERPP1D01	Guide			D	1
3	7	A3ERPP1701	Guide			D	2
3	8	A3ERPP1A01	Lock Lever			D	1
3	9	A3ERPP1600	Roll			C	1
3	10	A3ERPP1L00	Shaft			D	1
3	11	A3ERPP1N01	Tension Spring			C	1
3	12	A3ERPP1903	Mounting Plate			D	1
3	a	A3EPPPB101	Screw			D	
3	b	A3EPPPB601	Screw			D	
3	c	A3EPPPB701	Screw			D	
3	d	V217030001	E Ring			V	
3	e	V217040001	E Ring			V	

7.4 PAPER CEASE SECTION

P 4

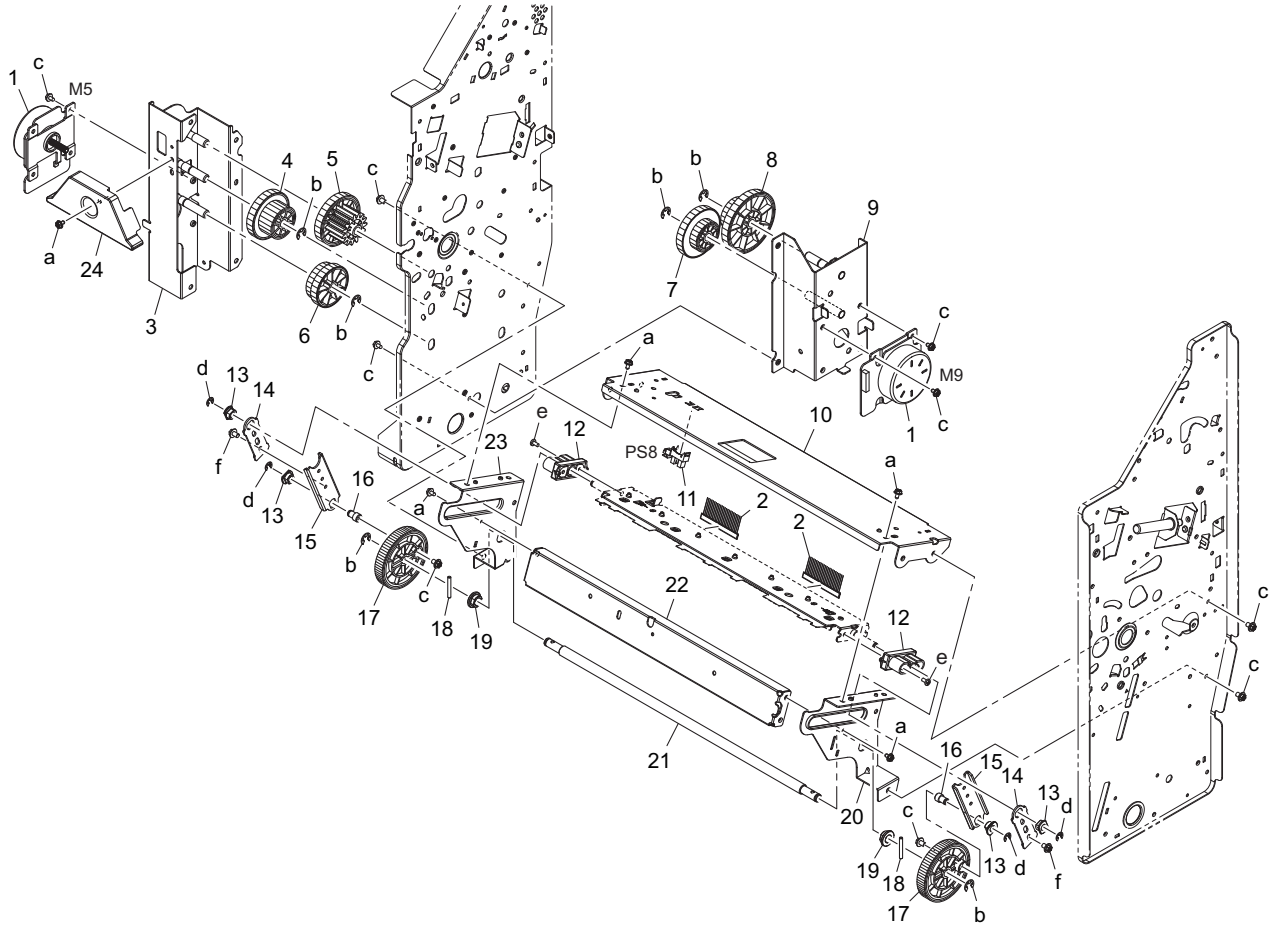

Page	Key	Parts No.	Description	Service Manual	Destinations	Class	Quantity
4	1	A3ERPP4S00	Motor	Center fold roller motor (M5) Center fold knife motor (M9)		C	2
4	2	A3ERPP7Q00	Neutralizing Brush			C	2
4	3	A3ERPP4701	Mounting Plate			D	1
4	4	A3ERPP4B01	Gear 24/46T			C	1
4	5	A3ERPP4E00	Gear 15/40T			C	1
4	6	A3ERPP4F01	Gear 34/80T			C	1
4	7	A3ERPP4U02	Gear 28/96T			C	1
4	8	A3ERPP4T01	Gear 24/60T			C	1
4	9	A3ERPP4301	Mounting Plate			D	1
4	10	A3ERPP3X01	Mounting Plate			D	1
4	11	A108M50100	Photointerrupter	Center fold knife home sensor (PS8)		B	1
4	12	A3ERPP4900	Holder			D	2
4	13	A3EPPP1101	Bushing			D	4
4	14	A3ERPP4V01	Plate			D	2
4	15	A3ERPP4201	Slide Plate			D	2
4	16	A3ERPP4K00	Shaft			D	2
4	17	A3ERPP4A01	Gear 46T			C	2
4	18	A3EPPPAS01	Pin			D	2
4	19	A3EPPP1201	Bushing			D	2
4	20	A3ERPP3Y01	Mounting Plate			D	1
4	21	A3ERPP4J00	Shaft			D	1
4	22	A3ERPP4101	Stay			D	1
4	23	A3ERPP4001	Mounting Plate			D	1
4	24	A3ERPP1H01	Cover			D	1
4	a	A3EPPPB601	Screw			D	
4	b	V217060001	E Ring			V	

4	c	A3EPPPBQ01	Screw			D	
4	d	V217040001	E Ring			V	
4	e	A3EPPPB001	Screw			D	
4	f	A3ERPP7T00	Screw			D	

P 5

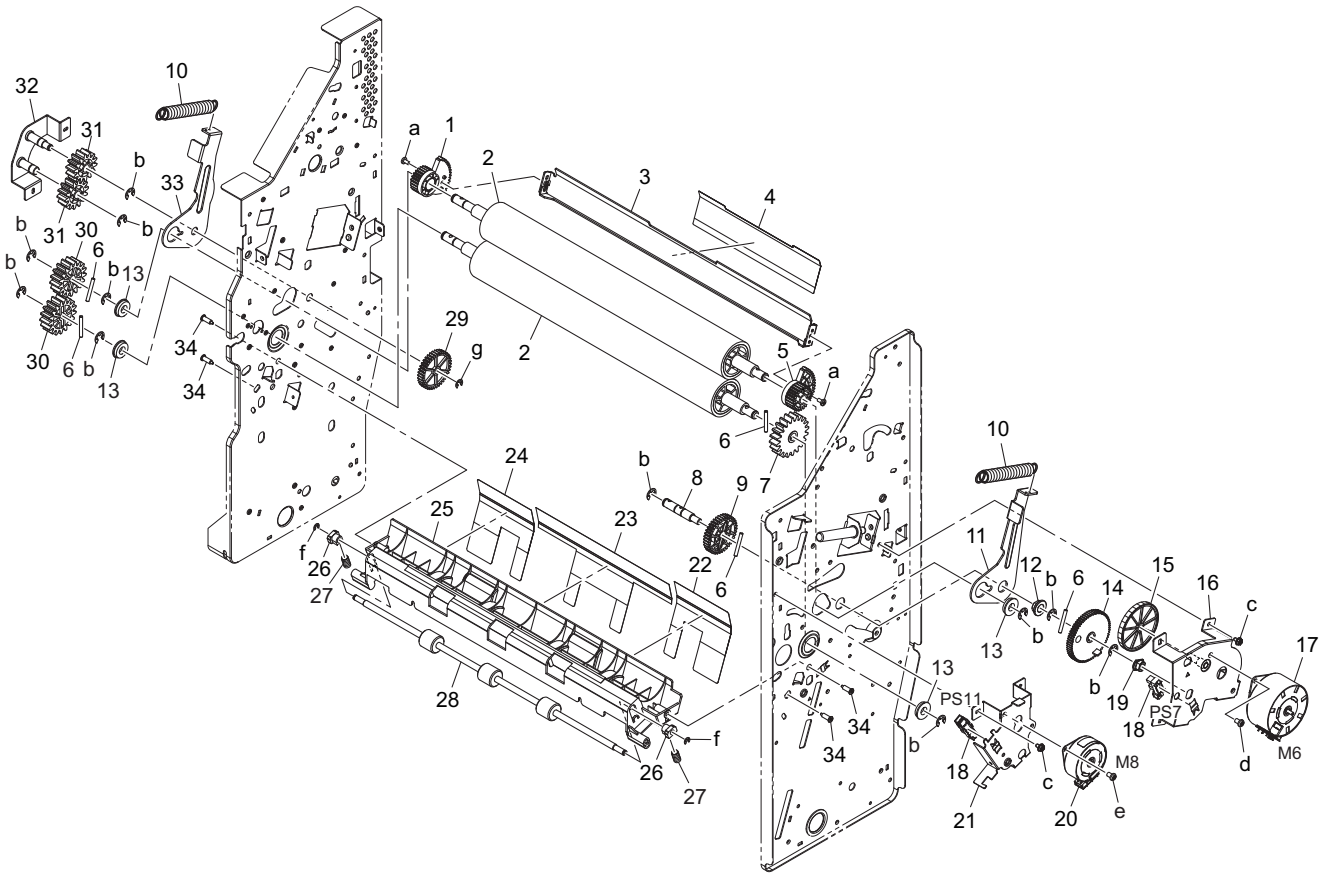

Page	Key	Parts No.	Description	Service Manual	Destinations	Class	Quantity
5	1	A3ERPP4Q01	Gear			C	1
5	2	A3ERPP4N01	Roller			C	2
5	3	A3ERPP4802	Guide Plate			D	1
5	4	A3ERPP4R01	Plate			D	1
5	5	A3ERPP4G01	Gear			C	1
5	6	A3EPPPAS01	Pin			D	5
5	7	A3ERPP5E00	Gear 20T			C	1
5	8	A3ERPP4L00	Shaft			D	1
5	9	A3ERPP4H00	Gear 38T			C	1
5	10	A3ERPP4M02	Tension Spring			C	2
5	11	A3ERPP4401	Arm			D	1
5	12	A3EPPP1201	Bushing			D	1
5	13	4004454001	BALL BEARING			B	4
5	14	A3ERPP5701	Gear 46T			C	1
5	15	A3ERPP5801	Gear 15/93T			C	1
5	16	A3ERPP5101	Mounting Plate			D	1
5	17	A3ERPP5R00	Motor	Tri-folding guide motor (M6)		C	1
5	18	A108M50100	Photointerrupter	Guide home sensor (PS7) Tri-folding gate home sensor (PS11)		B	2
5	19	A3EPPP1101	Bushing			D	1
5	20	A3ERPP3N00	Motor	Center fold guide motor (M8)		C	1
5	21	A3ERPP5202	Mounting Plate			D	1
5	22	A3ERPP5P00	Seal			C	1
5	23	A3ERPP5N00	Seal			C	1

5	24	A3ERPP5Q00	Seal			C	1
5	25	A3ERPP4Y01	Guide			D	1
5	26	A3ERPP5M01	Bushing			D	2
5	27	A3ERPP7K00	Pressing Spring			C	2
5	28	A3ERPP5J01	Roller			C	1
5	29	A3ERPP5S00	Gear 38T			C	1
5	30	A3ERPP4C00	Gear 17T			C	2
5	31	A3ERPP4D00	Gear 14T			C	2
5	32	A3ERPP4601	Mounting Plate			D	1
5	33	A3ERPP4501	Arm			D	1
5	34	A3EPPP2501	Screw			D	4
5	a	A3EPPPB001	Screw			D	
5	b	V217060001	E Ring			V	
5	c	A3EPPPB601	Screw			D	
5	d	A3ERPP6K01	Screw			D	
5	e	A3EPPPAY01	Screw			D	
5	f	V217030001	E Ring			V	
5	g	V217040001	E Ring			V	

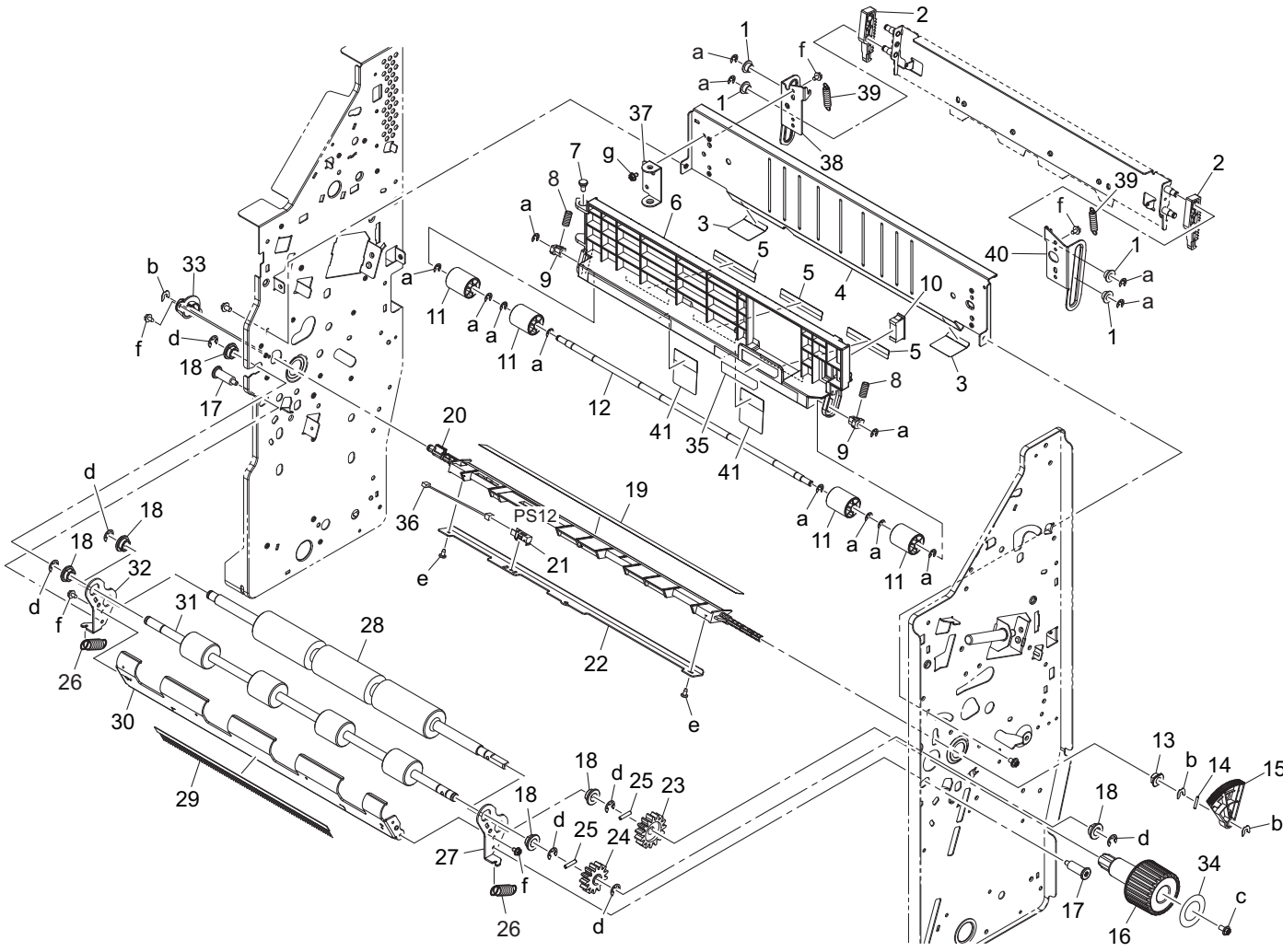

Page	Key	Parts No.	Description	Service Manual	Destinations	Class	Quantity
6	1	A3ERPP5A00	Bushing			D	4
6	2	A3ERPP5500	Gear			C	2
6	3	A3ERPP6401	Seal			C	2
6	4	A3ERPP4X01	Guide Plate			D	1
6	5	A3ERPP6501	Seal			C	3
6	6	A3ERPP5403	Guide			D	1
6	7	A02E193400	Shoulder screw			C	1

6	8	A3ERPP7K00	Pressing Spring			C	2
6	9	A3ERPP5M01	Bushing			D	2
6	10	4030104002	CATCH			D	1
6	11	A3ERPP5900	Roll			C	4
6	12	A3ERPP5H00	Shaft			D	1
6	13	A3EPPP1400	Bushing			D	1
6	14	A3EPPPAR01	Pin			D	1
6	15	A3ERPP5C00	Gear			C	1
6	16	A3ERPP5D01	Knob			C	1
6	17	A3ERPP6101	Shoulder Screw			D	2
6	18	A3EPPP1201	Bushing			D	6
6	19	A3ERPP6301	Seal			C	1
6	20	A3ERPP5B02	Guide Plate			D	1
6	21	A0EDM50100	Photoreflector	Fold exit sensor (PS12)		I	1
6	22	A3ERPP6201	Auxiliary Plate			D	1
6	23	A3ERPP5F01	Gear 15T			C	1
6	24	A3ERPP5G02	Gear 13T			C	1
6	25	A3ERPP1101	Pin			D	2
6	26	A3ERPP7M01	Tension Spring			C	2
6	27	A3ERPP5302	Mounting Plate			D	1
6	28	A3ERPP5L01	Roller			C	1
6	29	A3ERPP5Y01	Neutralizing Brush			D	1
6	30	A3ERPP5002	Guide Plate			D	1
6	31	A3ERPP5K01	Roller			C	1
6	32	A3ERPP5602	Mounting Plate			D	1
6	33	A3ERPP5X00	Bushing			D	1
6	34	A3ERPP6S00	Label			D	1
6	35	A3ERPP6U00	Label			D	1
6	36	A3ERPP7H00	Wire Harness Assy			D	1
6	37	A3ERPP7401	Bracket			D	1
6	38	A3ERPP7201	Bracket			D	1
6	39	A3ERPP7302	Tension Spring			C	2
6	40	A3ERPP7102	Bracket			D	1
6	41	A3ERPP6001	Seal			C	2
6	a	V217040001	E Ring			V	
6	b	V218040086	E ring			V	
6	c	A3EPPPCJ01	Screw			D	
6	d	V217060001	E Ring			V	
6	e	A3ERPP6L01	Screw			D	
6	f	A3EPPPB601	Screw			D	
6	g	A3ERPP8200	Screw			D	

7.5 PAPER TRANSPORT SECTION

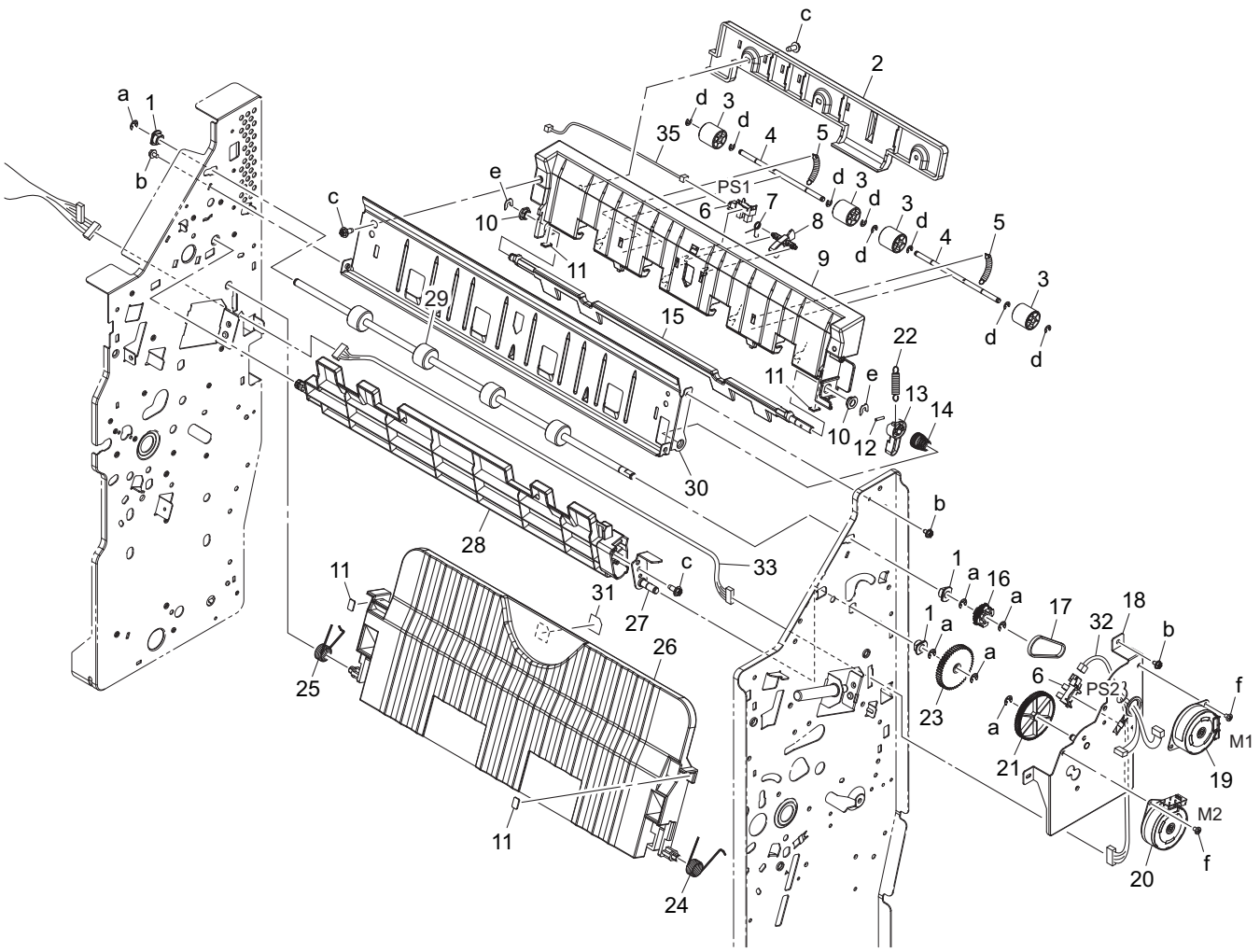

Page	Key	Parts No.	Description	Service Manual	Destinations	Class	Quantity
7	1	A3EPPP1101	Bushing			D	3
7	2	A3ERPP2J02	Guide			D	1
7	3	A3EPPP3702	Roll			C	4
7	4	A3ERPP2A00	Shaft			D	2
7	5	A3ERPP2N01	Tension Spring			C	2
7	6	A108M50100	Photointerrupter	SD entrance sensor (PS1) Curl cover detection sensor (PS2)		B	2
7	7	A3ERPP2B00	Torsion Spring			C	1
7	8	A3ERPP2101	Actuator			C	1
7	9	A3ERPP2301	Guide			D	1
7	10	A3EPPP1300	Bushing			D	2
7	11	A3ERPP2P01	Cushion			C	4
7	12	A3EPPPAQ01	Pin			D	1
7	13	A3ERPP2401	Lever			C	1
7	14	A3ERPP6X01	Pressure Spring			C	1
7	15	A3ERPP2901	Lever			C	1
7	16	A3ERPP2E01	Gear 30T			C	1
7	17	A3ERPP2G00	Timing Belt			C	1
7	18	A3ERPP1X01	Mounting Plate			D	1
7	19	A3ERPP2F00	Motor	SD transport motor (M1)		C	1
7	20	A3ERPP3N00	Motor	Paper discharge control motor (M2)		C	1
7	21	A3ERPP2700	Gear 16/88T			C	1
7	22	A3ERPP6V01	Tension Spring			C	1
7	23	A3ERPP2800	Gear 50T			C	1

7	24	A3ERPP2C00	Torsion Spring			C	1
7	25	A3ERPP2L00	Torsion Spring			C	1
7	26	A3ERPP1V02	Guide			D	1
7	27	A3ERPP2001	Mounting Plate			D	1
7	28	A3ERPP2201	Guide			D	1
7	29	A3ERPP2D01	Roller			C	1
7	30	A3ERPP1U02	Guide			D	1
7	31	A3ERPP6R00	Label			D	1
7	32	A3ERPP7800	Wire Harness Assy			D	1
7	33	A3ERPP7D01	Wire Harness Assy			D	1
7	34	A3ERPP7701	Wire Harness Assy			D	1
7	35	A3ERPP7C01	Wire Harness Assy			D	1
7	a	V217040001	E Ring			V	
7	b	A3EPPPB601	Screw			D	
7	c	A3EPPPB401	Screw			D	
7	d	V217030001	E Ring			V	
7	e	V218040086	E ring			V	
7	f	A3EPPPAY01	Screw			D	

7.6 STAPLER SECTION

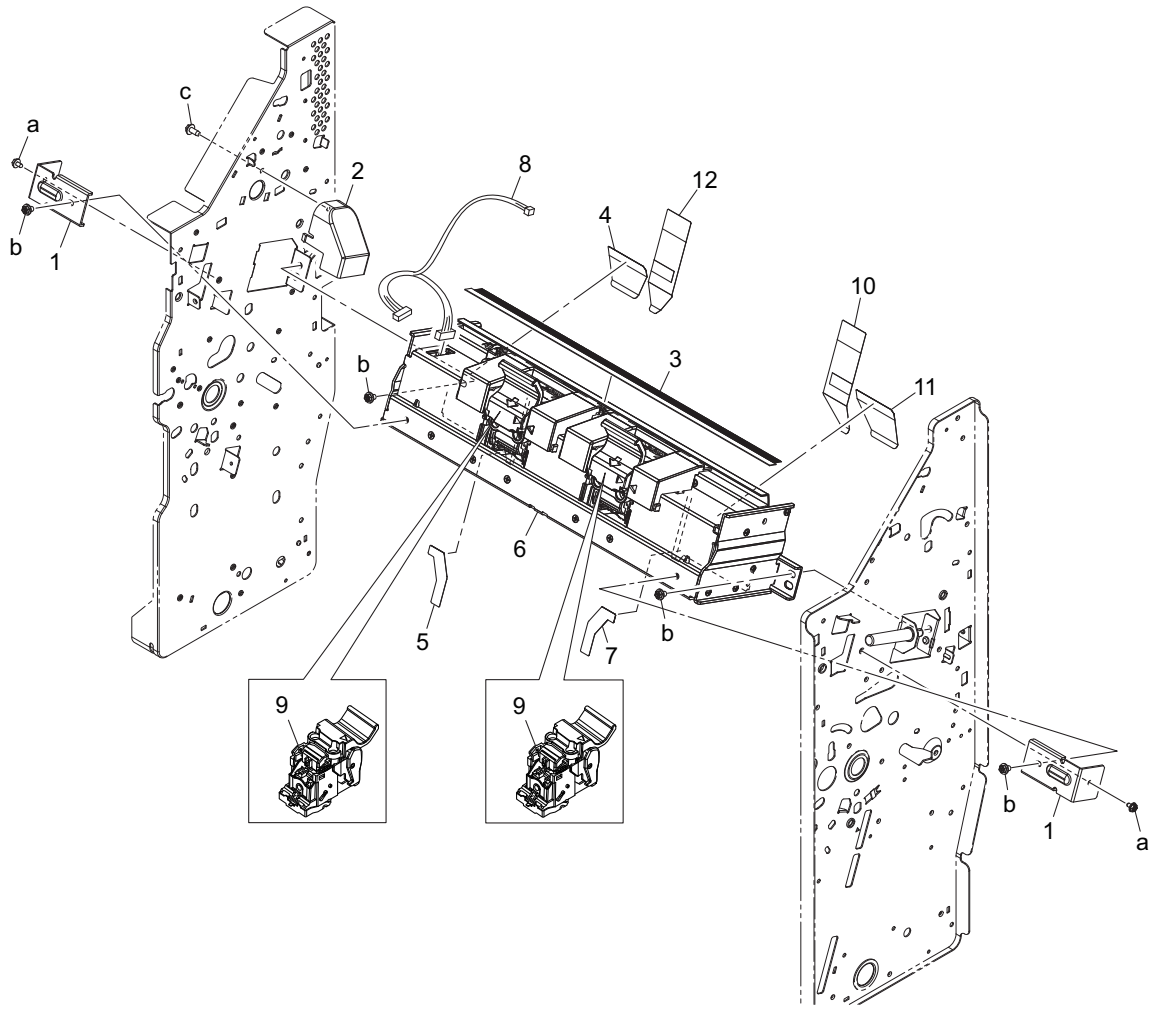

Page	Key	Parts No.	Description	Service Manual	Destinations	Class	Quantity
8	1	A3ERPP3Q01	Mounting Plate			D	2
8	2	A3ERPP3R02	Cover			C	1
8	3	A3ERPP3V01	Neutralizing Brush			C	1
8	4	A3ERPP3U02	Seal			C	1
8	5	A3ERPP3T01	Seal			C	1

8	6	A10D929300	Stapler Unit			C	1
8	7	A3ERPP3S01	Seal			C	1
8	8	A3ERPP7900	Wire Harness Assy			D	1
8	9	A10DP00100	STAPLE CARTRIDGE			C	2
8	10	A3ERPP7W01	Seal			C	1
8	11	A3ERPP7V00	Seal			C	1
8	12	A3ERPP7X01	Seal			C	1
8	a	A3EPPPB601	Screw			D	
8	b	A3EPPPBQ01	Screw			D	
8	c	A3EPPPB401	Screw			D	

7.7 ALIGNMENT SECTION

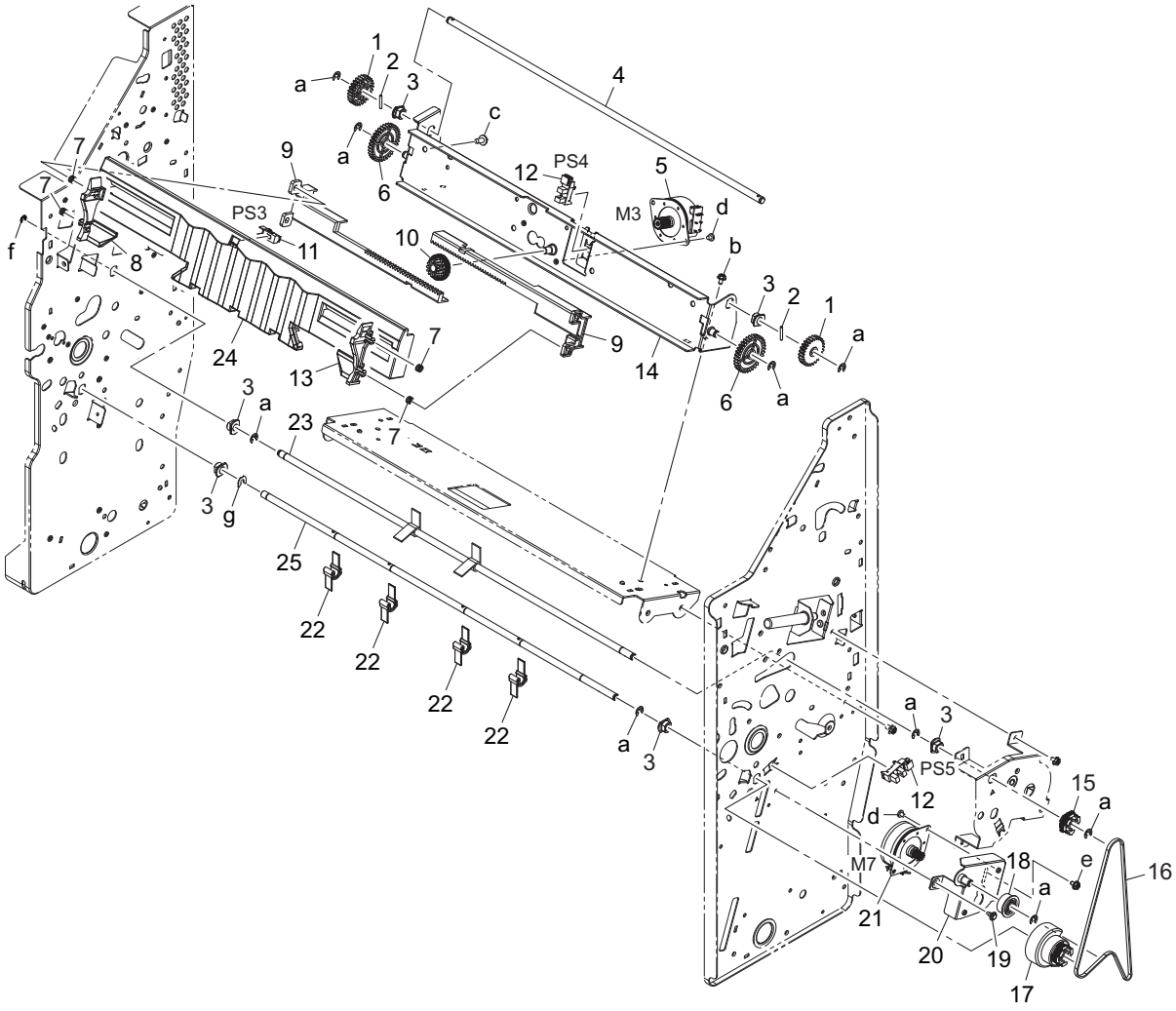

Page	Key	Parts No.	Description	Service Manual	Destinations	Class	Quantity
9	1	A3ERPP5T00	Gear 26T			C	2
9	2	A3ERPP1001	Pin			D	2
9	3	A3EPPP1101	Bushing			D	6
9	4	A3ERPP5U00	Shaft			D	1
9	5	A3ERPP3N00	Motor	Alignment motor (M3)		C	1
9	6	A3ERPP5V00	Gear 34T			C	2
9	7	A3ERPP3E00	Pressing Spring			C	4
9	8	A3ERPP3B02	Regulating Plate			D	1
9	9	A3ERPP3C02	Rack			D	2
9	10	A3ERPP3D01	Gear 14/44T			C	1
9	11	A0EDM50100	Photoreflector	Center staple/fold stacker paper detect sensor (PS3)		I	1
9	12	A108M50100	Photointerrupter	Alignment home sensor (PS4)		B	2

				Paddle home sensor (PS5)			
9	13	A3ERPP3A02	Regulating Plate			D	1
9	14	A3ERPP3901	Mounting Plate			D	1
9	15	A3ERPP2E01	Gear 30T			C	1
9	16	A3ERPP3J00	Timing Belt			C	1
9	17	A3ERPP3K01	Gear 30T			C	1
9	18	A3ERPP2R00	Roller			C	1
9	19	A092145400	Shoulder screw			C	1
9	20	A3ERPP2T01	Mounting Plate			D	1
9	21	A3ERPP3M00	Motor	SD paddle motor (M7)		C	1
9	22	A3ERPP7Y00	Paddle Assy			C	4
9	23	A3ERPP3801	Paddle Assy			C	1
9	24	A3ERPP6Y02	Cover			C	1
9	25	A3ERPP7Z00	Shaft			D	1
9	a	V217040001	E Ring			V	
9	b	A3EPPPB601	Screw			D	
9	c	A3EPPPB401	Screw			D	
9	d	A3EPPPAY01	Screw			D	
9	e	A3EPPPB101	Screw			D	
9	f	V217030001	E Ring			V	
9	g	V218040086	E ring			V	

P 10

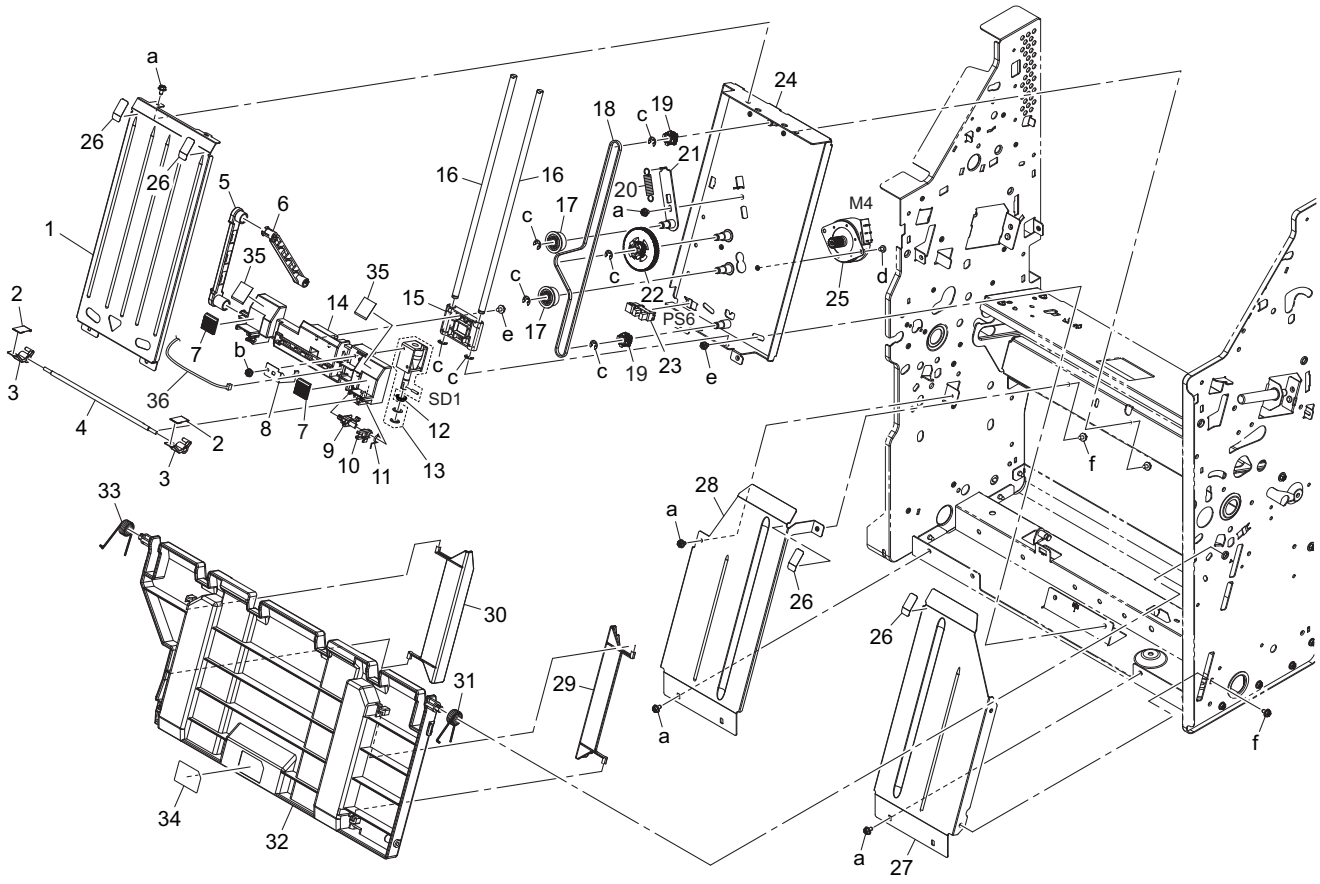

Page	Key	Parts No.	Description	Service Manual	Destinations	Class	Quantity
10	1	A3ERPP7N01	Guide Plate			D	1
10	2	A3ERPP3G01	Seal			C	2
10	3	A3ERPP3301	Stopper			C	2
10	4	A3ERPP3601	Shaft			D	1
10	5	A3ERPP3101	Arm			C	1
10	6	A3ERPP3201	Arm			C	1
10	7	A3ERPP3P01	Cushion			C	2

10	8	A3ERPP3L01	Plate Spring			D	1
10	9	A3ERPP3401	Lever			C	1
10	10	A3ERPP3000	Lever			C	1
10	11	A3ERPP3701	Torsion Spring			C	1
10	12	A3ERPP3F01	Pressing Spring			C	1
10	13	A10DM20000	Plunger solenoid	Stopper solenoid (SD1)		C	1
10	14	A3ERPP2V00	Holder			D	1
10	15	A3ERPP2U00	Holder			D	1
10	16	A3ERPP3500	Shaft			D	2
10	17	A3ERPP2R00	Roller			C	2
10	18	A3ERPP3H00	Timing Belt			C	1
10	19	A3ERPP2Y00	Gear 20T			C	2
10	20	A3ERPP7001	Tension Spring			C	1
10	21	A3ERPP2Q01	Tension Plate			D	1
10	22	A3ERPP2X00	Gear			C	1
10	23	A108M50100	Photointerrupter	Stopper home sensor (PS6)		B	1
10	24	A3ERPP2S03	Mounting Plate			D	1
10	25	A3ERPP3N00	Motor	Stopper drive motor (M4)		C	1
10	26	A3ERPP2M01	Seal			D	4
10	27	A3ERPP1Y01	Guide			D	1
10	28	A3ERPP2K01	Guide			D	1
10	29	A3ERPP2602	Guide			D	1
10	30	A3ERPP2H02	Guide			D	1
10	31	A3ERPP2C00	Torsion Spring			C	1
10	32	A3ERPP2503	Guide			D	1
10	33	A3ERPP2L00	Torsion Spring			C	1
10	34	A3ERPP6T00	Label			D	1
10	35	A3ERPP7U00	Seal			D	2
10	36	A3ERPP7F01	Wire Harness Assy			D	1
10	a	A3EPPPB601	Screw			D	
10	b	A3EPPPBN01	Screw			D	
10	c	V217040001	E Ring			V	
10	d	A3EPPPAY01	Screw			D	
10	e	A3EPPPBA01	Screw			D	
10	f	A3EPPPB101	Screw			D	

7.8 PAPER EXIT TRAY SECTION

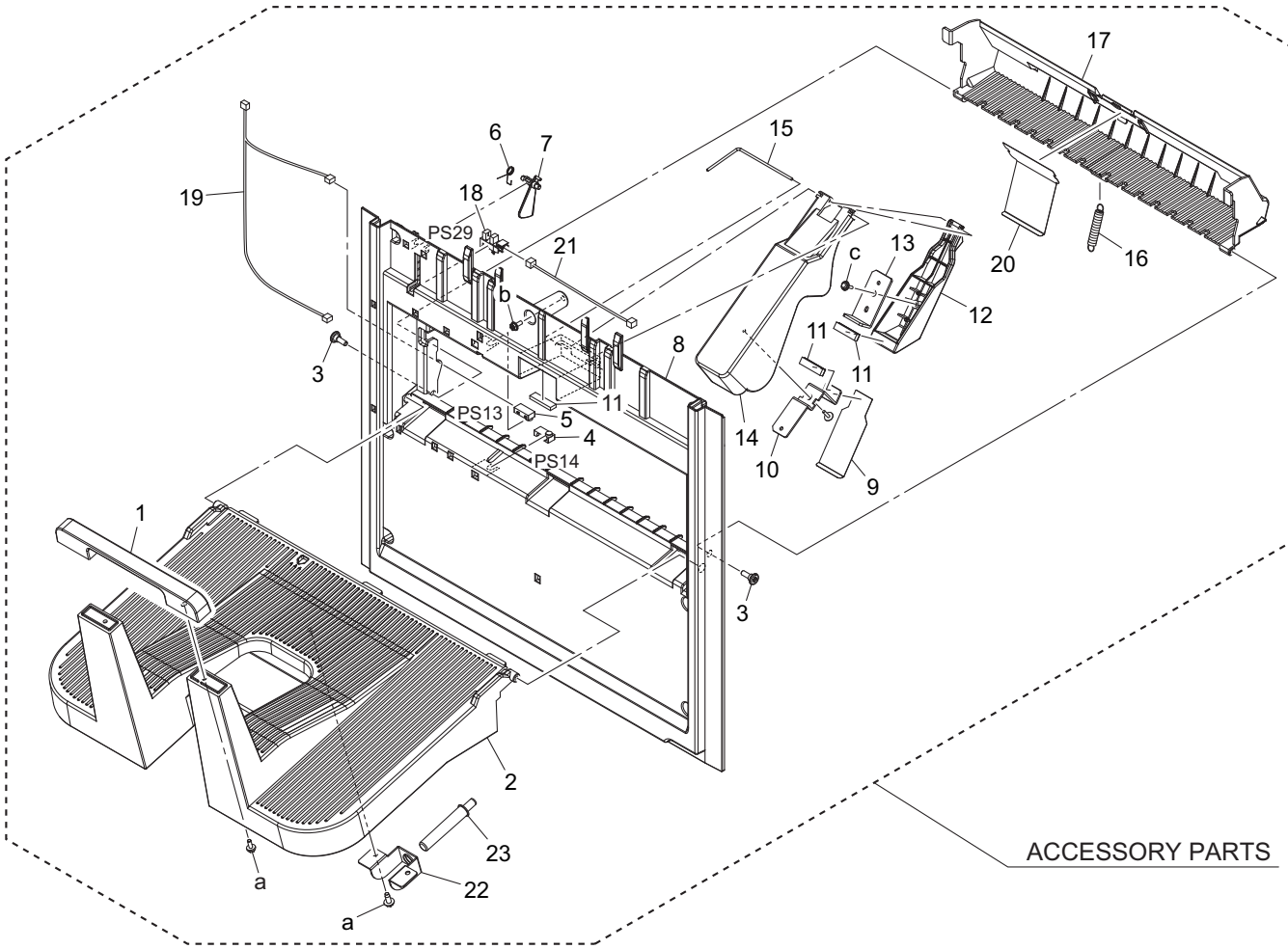

Page	Key	Parts No.	Description	Service Manual	Destinations	Class	Quantity
11	1	A3ERPP6801	Cover			C	1
11	2	A3ERPP6703	Tray			C	1
11	3	A3ERPP6G01	Shoulder Screw			D	2
11	4	A3EPPP2600	Photoreflector	Booklet tray empty detection sensor/out (PS14)		I	1
11	5	A3EPPP2700	Photoreflector	Booklet tray empty detection sensor/in (PS13)		I	1
11	6	A3EPPPBS00	Torsion Coil spring			C	1
11	7	A3EPPPA801	Actuator			C	1
11	8	A3ERPP6D02	Cover			C	1
11	9	A3ERPP6H01	Seal			C	1
11	10	A3ERPP6E01	Mounting Plate			D	1
11	11	A10D427300	Cushion			C	3
11	12	A3ERPP6A01	Cover			C	1
11	13	A3ERPP6F01	Mounting Plate			D	1
11	14	A3ERPP6901	Arm			C	1
11	15	A3ERPP6B00	Shaft			D	1
11	16	A3ERPP6C01	Tension Spring			C	1
11	17	A3ERPP6601	Guide			D	1
11	18	A108M50100	Photointerrupter			B	1
11	19	A3ERPP7J00	Wire Harness Assy			D	1
11	20	A3ERPP7501	Seal			C	1
11	21	A3EPPPCH00	Wire Harness Assy			D	1
11	22	A3ERPP8000	Mounting Plate			D	1
11	23	A3ERPP4P00	Shaft			D	1

11	a	A3EPPPB401	Screw			D	
11	b	A3EPPPB201	Screw			D	
11	c	A3EPPPB301	Screw			D	

7.9 WIRING

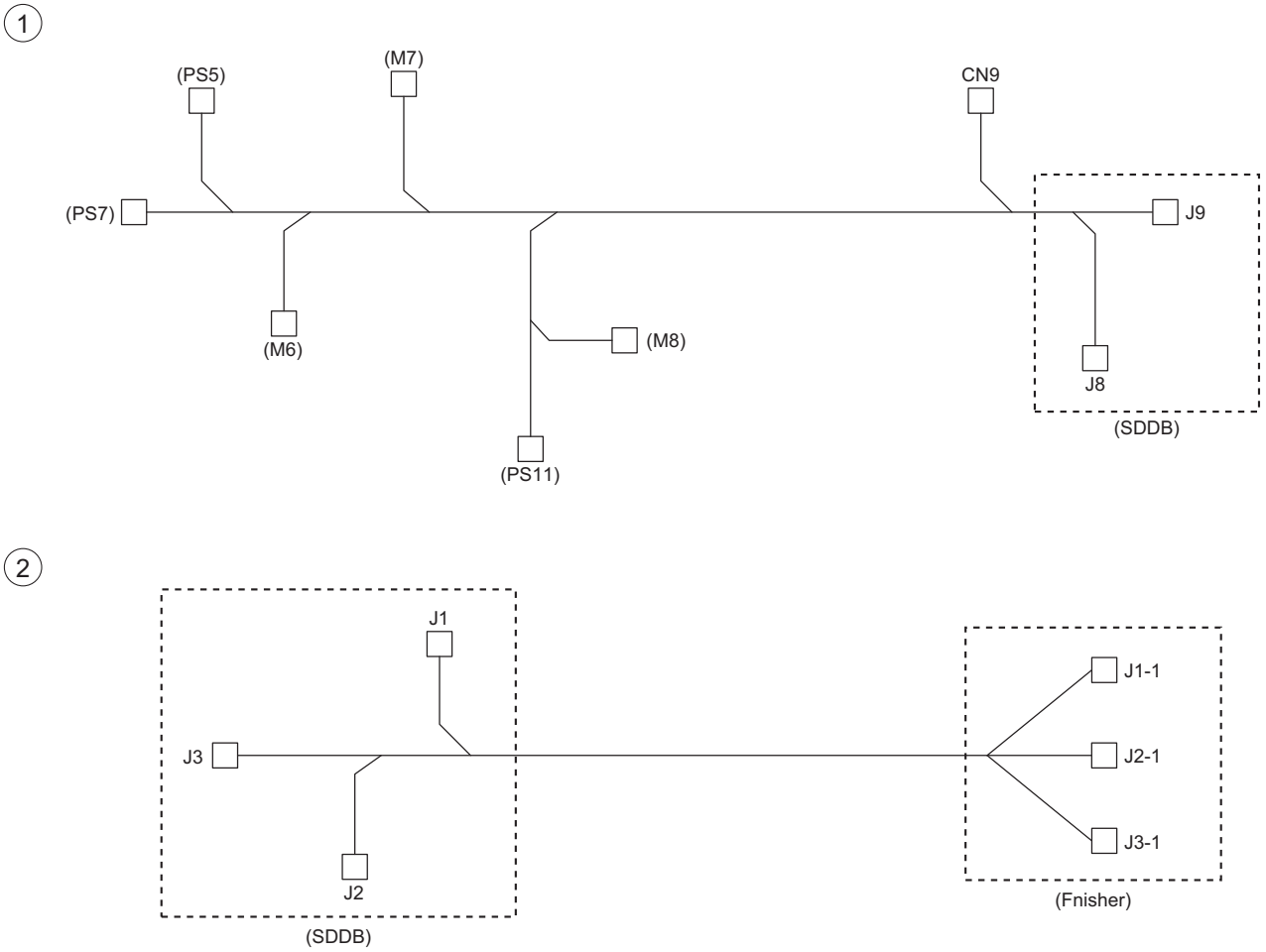

Page	Key	Parts No.	Description	Service Manual	Destinations	Class	Quantity
12	1	A3ERPP7E00	Wire Harness Assy			D	1
12	2	A3ERPP7600	Wire Harness Assy			D	1

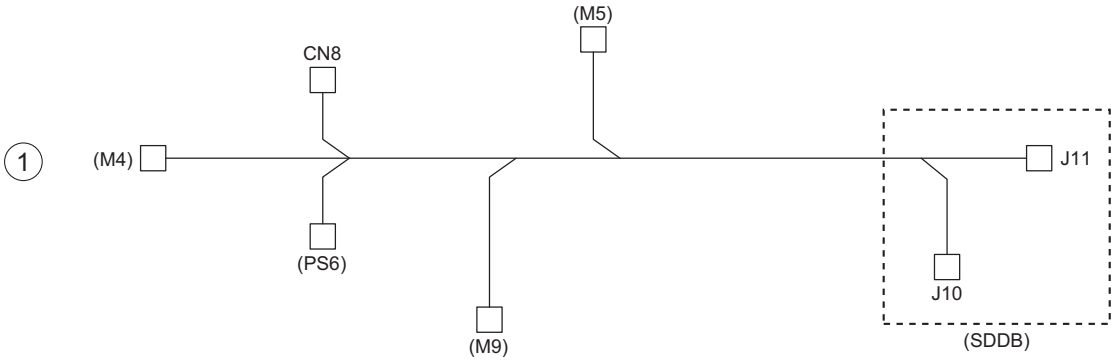

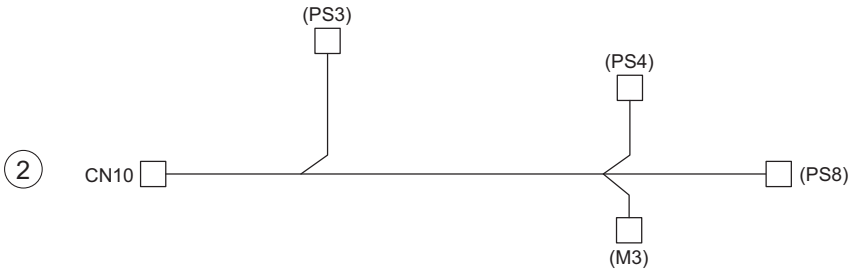

Page	Key	Parts No.	Description	Service Manual	Destinations	Class	Quantity
13	1	A3ERPP7B00	Wire Harness Assy			D	1
13	2	A3ERPP7A01	Wire Harness Assy			D	1

7.10 WIRING ACCESSORIES AND JIGS

1 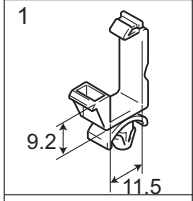	6 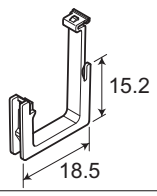	11	16	21	26	31	36
2 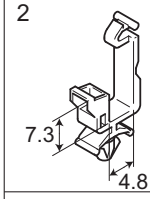	7	12	17	22	27	32	37
3 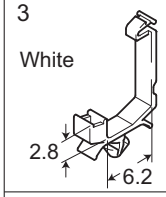	8	13	18	23	28	33	38
4 	9	14	19	24	29	34	39
5 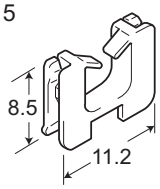	10	15	20	25	30	35	40

Page	Key	Parts No.	Description	Service Manual	Destinations	Class	Quantity
14	1	V500010005	saddle			D	
14	2	V500010020	Saddle			D	
14	3	V500010046	saddle			D	
14	4	V501010001	band			D	
14	5	V570010021	Saddle			D	
14	6	V570010026	saddle			D	

7.11 ACCESSORY PARTS

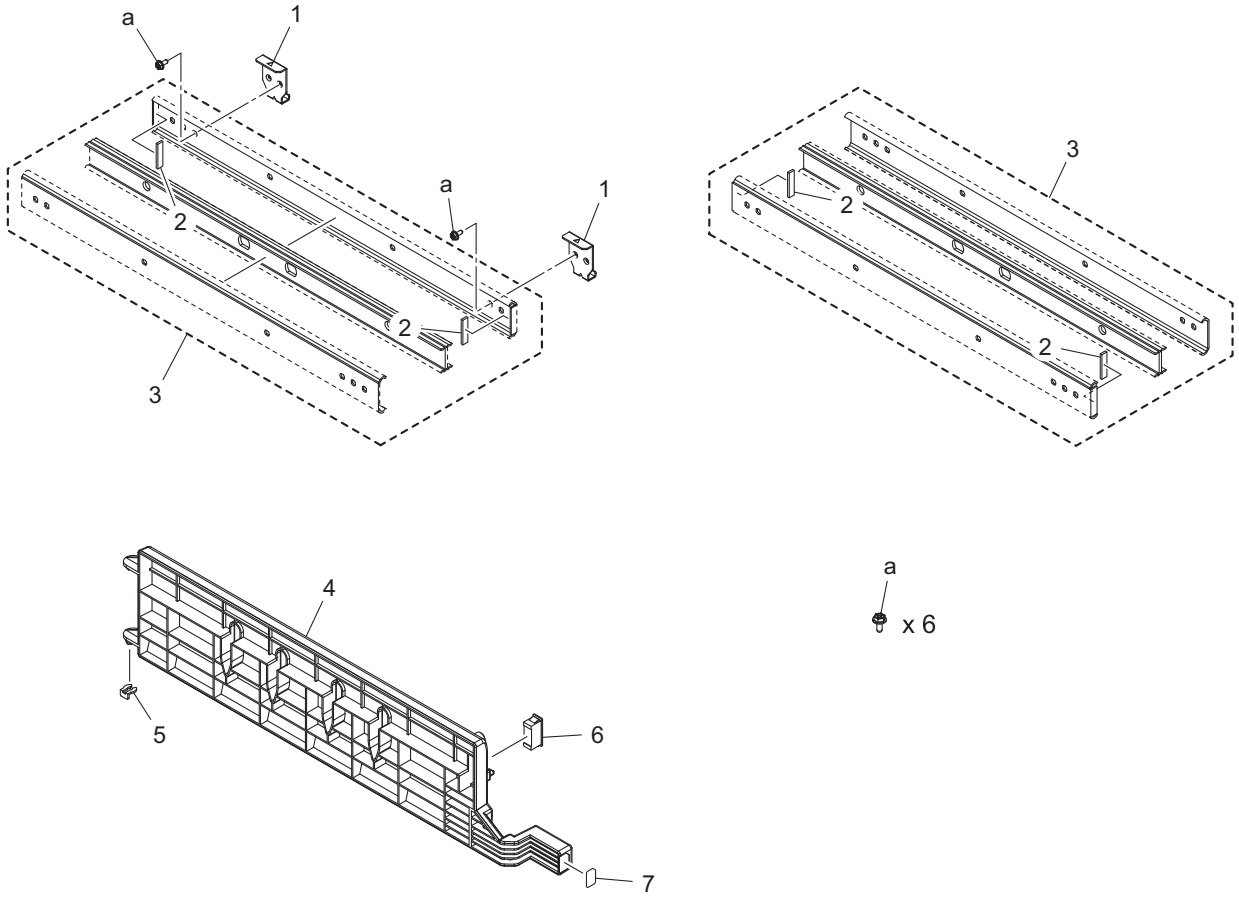

Page	Key	Parts No.	Description	Service Manual	Destinations	Class	Quantity
15	1	A3ERPP1501	Mounting Plate			D	2
15	2	A3ERPP8100	Cushion			D	4
15	3	A3ERPP1Q00	Rail			C	2
15	4	A3EPPPCL00	Guide			D	1
15	5	1033440203	STOPPER RING			C	1
15	6	4030104002	CATCH			D	1
15	7	A3EPPPCK00	Label			D	1
15	a	A3ERPP6K01	Screw			D	

7.12 MAINTENANCE LIST

- The items with no Page/Key numbers are not handled as spare parts.

No.	Section	PM Parts Description	Maintenance Cycle (K=1,000)		Parts No.	Destinations	Page/Key	Note
			QTY	Replace				
1	SD-511	Upper paddle assy	1	2,000K	A3ERPP3801		P9-23	*1
2		Lower paddle unit	4	2,000K	A3ERPP7Y00		P9-22	*1

- *1: Actual durable cycle (life counter value)

7.13 DESTINATION

Destination No.		Destinations	V	Hz	Model No.
A	A1	JAPAN	100	50/60	A3ERWY1
	A2	JAPAN			
B		USA, CANADA	120	60	A3ERWY1

C		EUROPEAN TYPE		220-240	50/60	A3ERWY1
D	D1	S.E ASIA TYPE	THAILAND,SRI LANKA,SINGAPORE,MALAYSIA,HONGKONG, PAKISTAN,INDIA,BANGLADESH,INDONESIA	220-240	50/60	A3ERWY1
	D3	OCEAINA TYPE	AUSTRALIA,NEW ZEALAND	220-240	50/60	A3ERWY1
E		PHILIPPINES		220-240	50/60	A3ERWY1
F	F1	SAUDI ARABIA				
	F2	SAUDI ARABIA		220-240	50/60	A3ERWY1
G	G1	C.S AMERICA		220-240	50/60	A3ERWY1
	G2	C.S AMERICA		120	60	A3ERWY1
H		TAIWAN		110	60	A3ERWY1
I		JORDAN, LEBANON, SYRIA, SOUTH AFRICA, IRAQ, IRAN, N.YEMEN, CAMEROON, UAE, BAHRAIN, OMAN, QATAR, KUWAIT, KENYA, TUNISIA, IVORY COAST, MOROCCO		220-240	50/60	A3ERWY1
J		CHINA		220-240	50/60	A3ERWY1
K		KOREA		220-240	50/60	A3ERWY1

8. OTHER OPTION (JS-506)

8.1 SEPARATOR SECTION

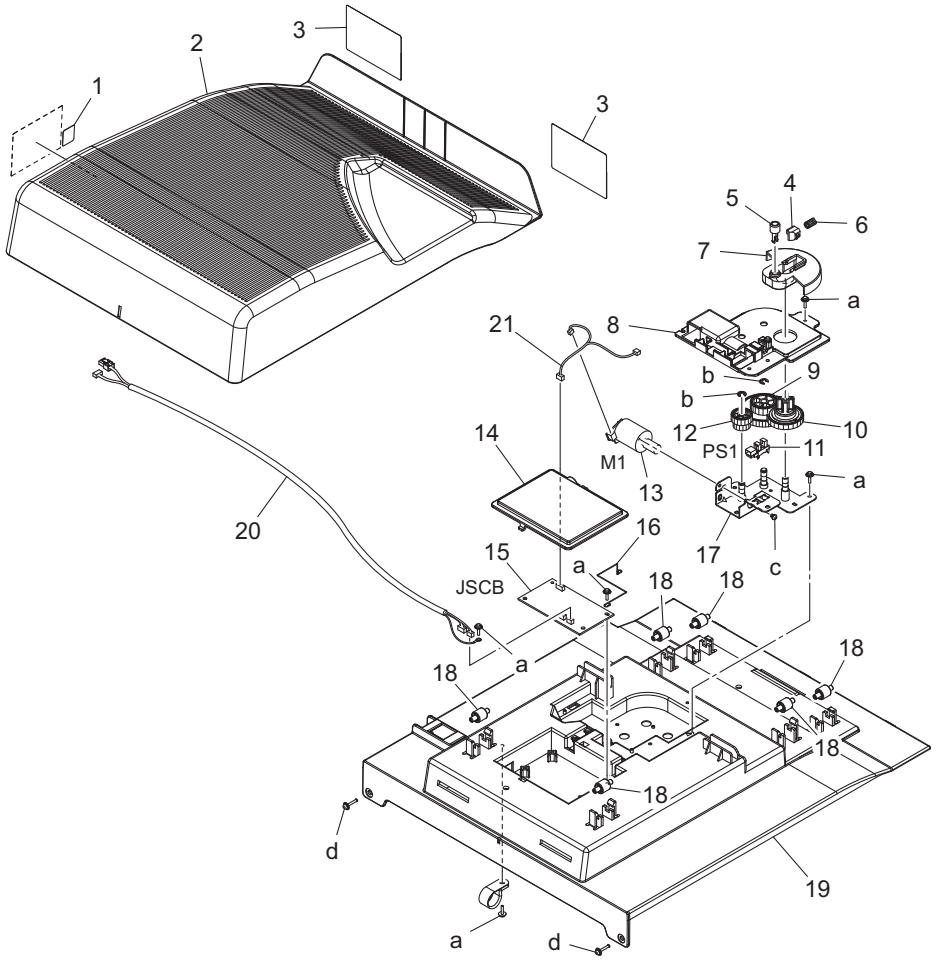

Page	Key	Parts No.	Description	Service Manual	Destinations	Class	Quantity
1	1	20AF97030	SEPARATION PROCESSING LABEL			D	1
1	2	A2YV890202	Paper exit Tray			D	1
1	3	A2YV892200	Sheet			C	2
1	4	A2YV891100	Ratchet			C	1
1	5	A2YV892100	Roll			C	1
1	6	A2YV891200	Spring			C	1
1	7	A2YV891000	Cam			C	1
1	8	A2YV890501	Drive Cover			D	1
1	9	A2YV890800	Gear 26/45T			C	1
1	10	A2YV890901	Gear 36T			C	1
1	11	A108M50100	Photointerrupter	Tray shift home sensor (PS1)		B	1
1	12	A2YV890700	Gear 15/20T			C	1
1	13	A2YVR70000	Motor Assy	Tray shift motor (M1)		C	1
1	14	A2YV890300	Protection Cover			D	1
1	15	A2YVH10100	PWB Assembly(PWB-JS)	JS control board (JSCB)		I	1
1	16	A2YV891900	Ground Part			C	1
1	17	A2YVR7A000	Mounting Plate			D	1
1	18	A2YV890400	Roll			C	6
1	19	A2YV890101	Housing			D	1
1	20	A2YVN10000	I/F Wiring			D	1
1	21	A2YVN10100	Drive Wiring			D	1
1	a	V153031003	screw			V	10

1	b	V217040001	E Ring			V	2
1	c	V115030403	Screw			V	2
1	d	V116031604	Screw			V	2

8.2 TRAY SECTION

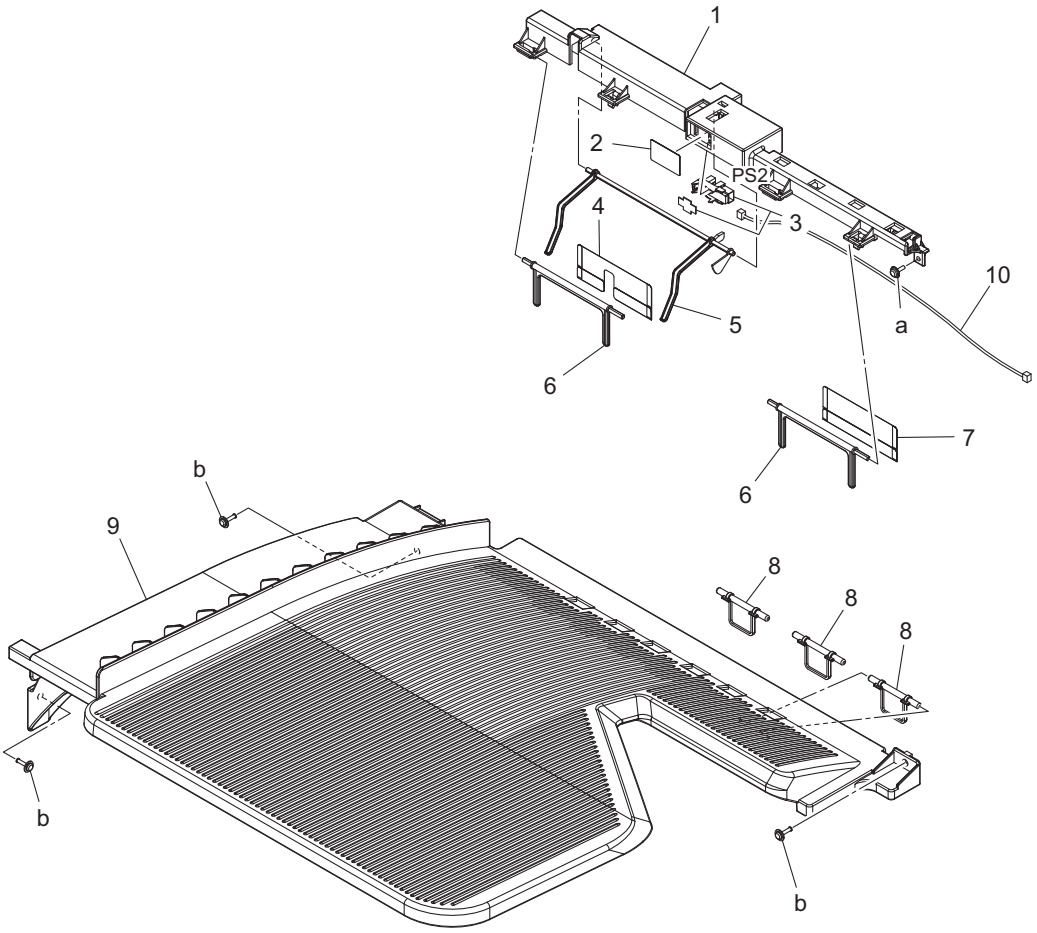

Page	Key	Parts No.	Description	Service Manual	Destinations	Class	Quantity
2	1	A3EP822201	Holder			D	1
2	2	A3EP822600	Sheet			D	1
2	3	A108R90000	PHOTO INTERRUPTER	Exit tray1 full sensor (PS2)		I	1
2	4	A3EP822500	Holding Sheet /2			D	1
2	5	A3EP822701	Lever			D	1
2	6	A3EP822300	Holding Part /1			D	2
2	7	A3EP822400	Holding Sheet /1			D	1
2	8	A2YV900200	Holding Part			C	3
2	9	A2YV911003	Paper exit Tray			C	1
2	10	A3EPN10200	Sensor Relay harness			D	1
2	a	V153030803	Screw			V	1
2	b	V137031004	SCREW			V	3

8.3 WIRING ACCESSORIES AND JIGS

1 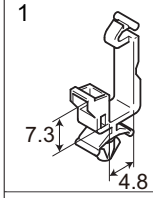	6	11	16	21	26	31	36
2 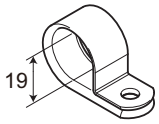	7	12	17	22	27	32	37
3	8	13	18	23	28	33	38
4	9	14	19	24	29	34	39
5	10	15	20	25	30	35	40

Page	Key	Parts No.	Description	Service Manual	Destinations	Class	Quantity
3	1	V500010020	Saddle			D	1
3	2	V500020035	clamp			D	1

8.4 DESTINATION

Destination No.		Destinations		V	Hz	Model No.
A	A1	JAPAN		100	50/60	A2YVWY1
	A2	JAPAN				
B		USA, CANADA		120	60	A2YVWY1
C		EUROPEAN TYPE		220-240	50/60	A2YVWY1
D	D1	S.E ASIA TYPE	THAILAND,SRI LANKA,SINGAPORE,MALAYSIA,HONGKONG, PAKISTAN,INDIA,BANGLADESH,INDONESIA	220-240	50/60	A2YVWY1
	D3	OCEAINA TYPE	AUSTRALIA,NEW ZEALAND	220-240	50/60	A2YVWY1
E		PHILIPPINES		220-240	50/60	A2YVWY1
F	F1	SAUDI ARABIA				
	F2	SAUDI ARABIA		220-240	50/60	A2YVWY1
G	G1	C.S AMERICA		220-240	50/60	A2YVWY1
	G2	C.S AMERICA		120	60	A2YVWY1
H		TAIWAN		110	60	A2YVWY1

I	JORDAN, LEBANON, SYRIA, SOUTH AFRICA, IRAQ, IRAN, N.YEMEN, CAMEROON, UAE, BAHRAIN, OMAN, QATAR, KUWAIT, KENYA, TUNISIA, IVORY COAST, MOROCCO	220-240	50/60	A2YVWY1
J	CHINA	220-240	50/60	A2YVWY1
K	KOREA	220-240	50/60	A2YVWY1

9. PUNCH UNIT (PK-519)

9.1 PUNCH UNIT

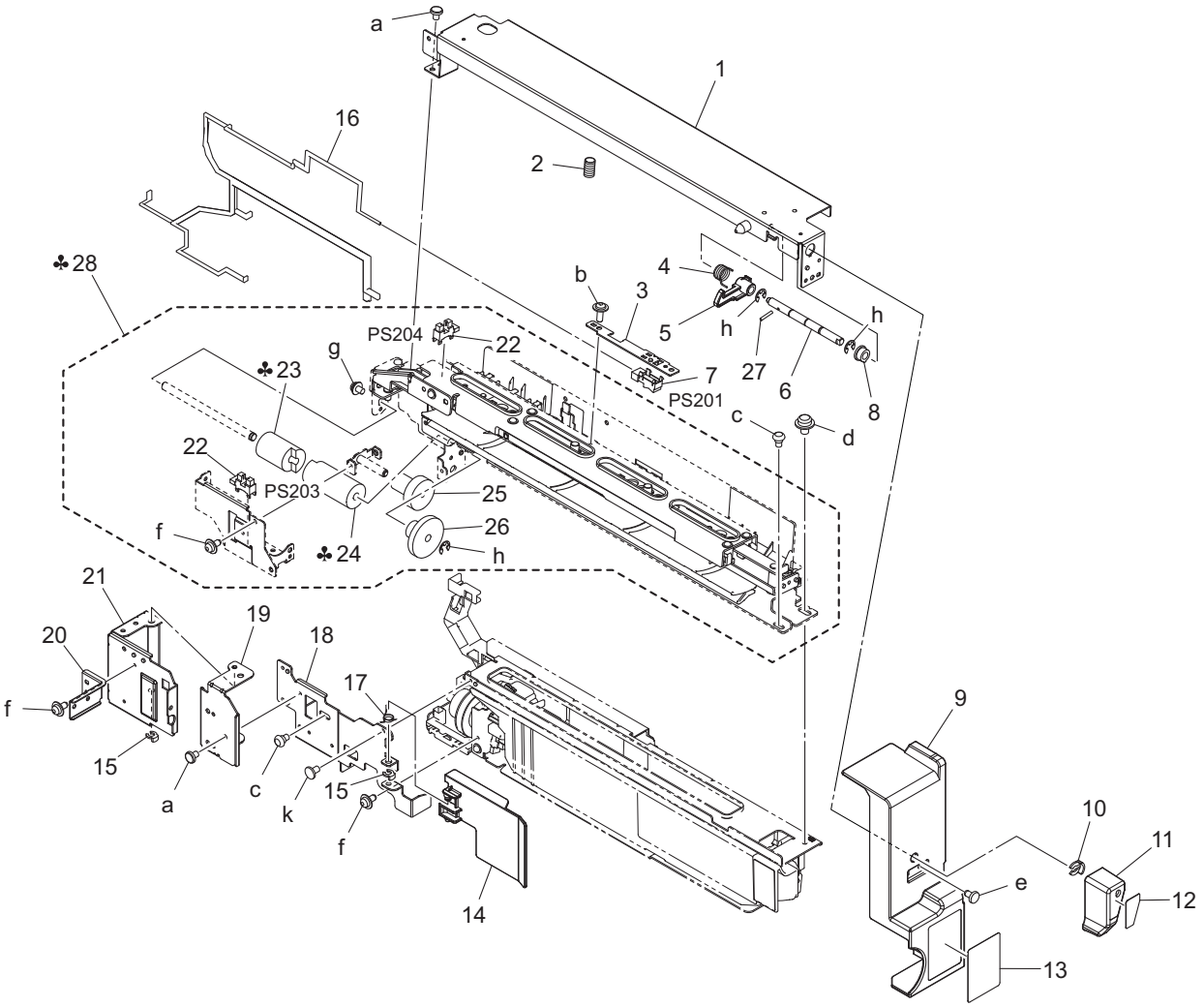

Page	Key	Parts No.	Description	Service Manual	Destinations	Class	Quantity
1	1	A3EWPP1100	Guide			D	1
1	2	A3EWPP4500	Pressing Spring			C	1
1	3	A3EWPP1200	Mounting Plate			D	1
1	4	A3EWPP5700	Torsion Spring			C	1
1	5	A3EWPP1600	Hook			C	1
1	6	A3EWPP2101	Shaft			D	1
1	7	A2YUPPS300	Photoreflector	Paper feed sensor (PS201)		I	1
1	8	A2YUPPS700	Bushing			D	1
1	9	A3EWPP1702	Cover			C	1
1	10	A2YUPPS500	Stopper			C	1
1	11	A3EWPP1401	Lever			C	1
1	12	A3EWPP2900	Label			C	1
1	13	A3EWPP2800	Label			C	1
1	14	A3EWPP2000	Guide			D	1
1	15	A0U7PP0U00	STOPPER RING			D	2
1	16	A3EWPP5800	Harness			D	1
1	17	A3EWPP4400	Torsion Spring			C	1
1	18	A3EWPP1001	Mounting Plate			D	1
1	19	A3EWPP0601	Mounting Plate			D	1
1	20	A3EWPP1300	Mounting Plate			D	1
1	21	A3EWPP0700	Mounting Plate			D	1
1	22	A2YUPPT800	Photointerrupter	Puncher drive cam sensor (PS203)		I	2

				Puncher home sensor (PS204)			
1	23	A3EWPP2601	Gear		A,A1,B,G2,C,D1,D3,E,F2, G1,H,I,J,K	C	1
1	23	A3EWPP5600	Gear		C(SWEDEN)	C	1
1	24	A3EWPP2501	Gear		A,A1,B,G2,C,D1,D3,E,F2, G1,H,I,J,K	C	1
1	24	A3EWPP2701	Gear		C(SWEDEN)	C	1
1	25	A3EWPP4301	Gear			C	1
1	26	A3EWPP4201	Gear			C	1
1	27	V231201250	pin			V	1
1	28	A3EWPP3600	Punch Unit 2 holes		A,A1	C	1
1	28	A3EWPP3700	Punch Unit 2/3 holes		B,G2,C,D1,D3,E,F2,G1,H,I ,J,K	C	1
1	28	A3EWPP3900	Punch Unit 2/4 holes		B,G2,C,D1,D3,E,F2,G1,H,I ,J,K	C	1
1	28	A3EWPP3800	Punch Unit 4 holes/ Sweden		C(SWEDEN)	C	1
1	a	A0U7PP0100	SCREW			D	
1	b	A3EWPP4700	Screw			D	
1	c	A3EWPP5000	Screw			D	
1	d	A3EWPP4900	Screw			D	
1	e	A0U7PPAH00	Screw			D	
1	f	A0U7PP1400	SCREW			D	
1	g	A3EWPP0000	Screw			D	
1	h	A0U7PP0E00	E RING			D	
1	k	A0U7PPBD00	Screw			D	

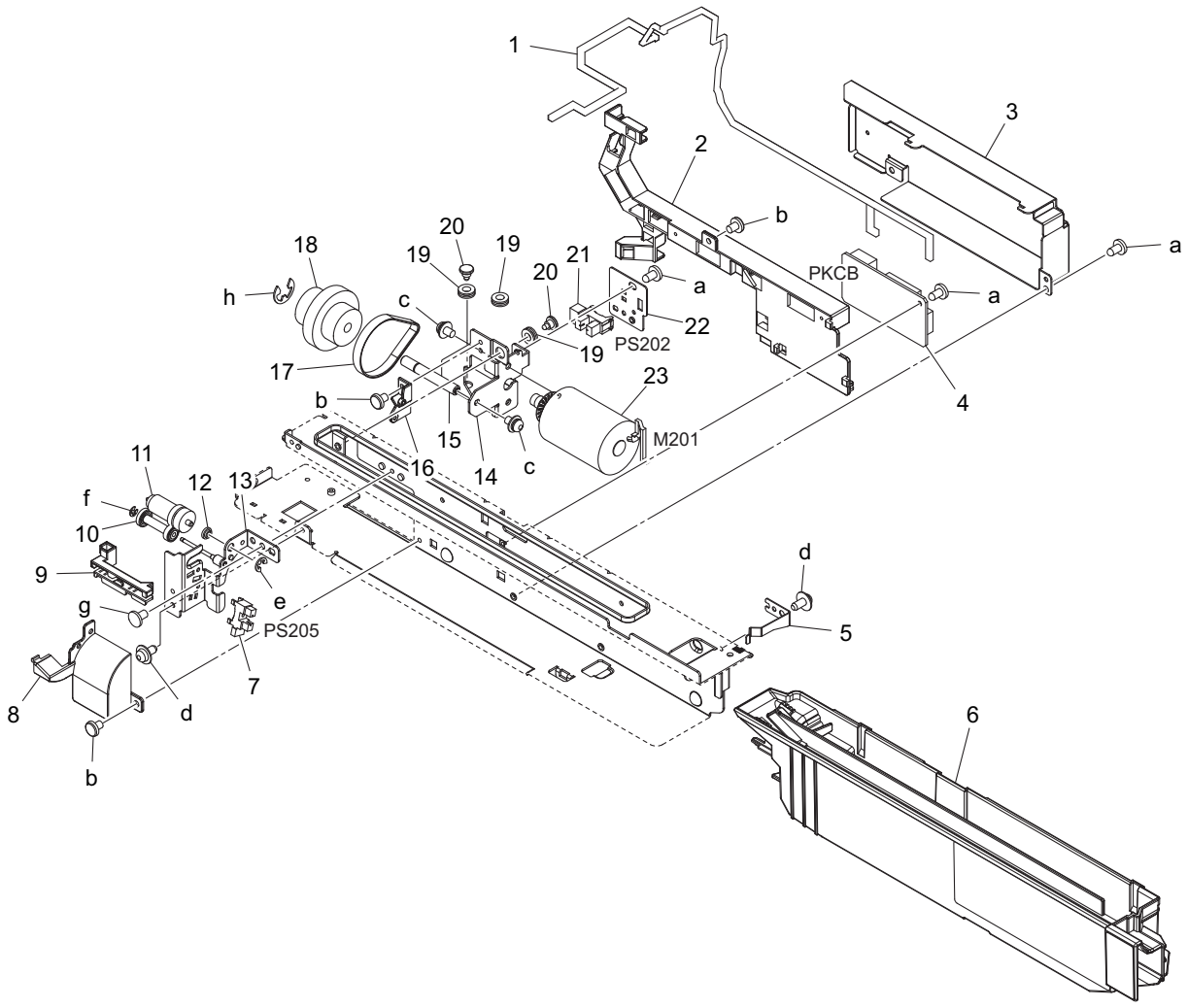

Page	Key	Parts No.	Description	Service Manual	Destinations	Class	Quantity

2	1	A3EWPP3300	Harness			D	1
2	2	A3EWPP1800	Guide			D	1
2	3	A3EWPP0900	Cover			D	1
2	4	A3EWPP3102	PWB Assembly	PK control board (PKCB)		I	1
2	5	A3EWPP0801	Plate Spring			D	1
2	6	A3EWPP3401	Collection Box			C	1
2	7	A2YUPPT800	Photointerrupter	Punch dust full sensor (PS205)		I	1
2	8	A3EWPP2300	Cover			D	1
2	9	A3EWPP2400	Guide			D	1
2	10	A3EWPP4101	Gear			C	1
2	11	A3EWPP3500	Gear Assy			C	1
2	12	A3EWPP5500	Bushing			D	1
2	13	A3EWPP3000	Mounting Plate			D	1
2	14	A3EWPP0401	Mounting Plate			D	1
2	15	A3EWPP4600	Shaft			D	1
2	16	A3EWPP1500	Holder			D	1
2	17	A3EWPP4800	Timing Belt			C	1
2	18	A3EWPP4001	Gear 26/80T			C	1
2	19	A0U7PPAK00	Rubber			D	3
2	20	A0U7PP8S01	Shoulder Screw			D	2
2	21	A0U7PPAB00	PHOTOINTERRUPTER	Punch motor sensor (PS202)		I	1
2	22	A3EWPP0500	Mounting Plate			D	1
2	23	A3EWPP3201	Motor	Punch motor (M201)		C	1
2	a	A0U7PPAH00	Screw			D	
2	b	A0U7PP0100	SCREW			D	
2	c	A3EWPP0000	Screw			D	
2	d	A0U7PP1400	SCREW			D	
2	e	A3EWPP5300	E Ring			D	
2	f	A3EWPP5200	E Ring			D	
2	g	A0U7PPBD00	Screw			D	
2	h	A0U7PP0E00	E RING			D	

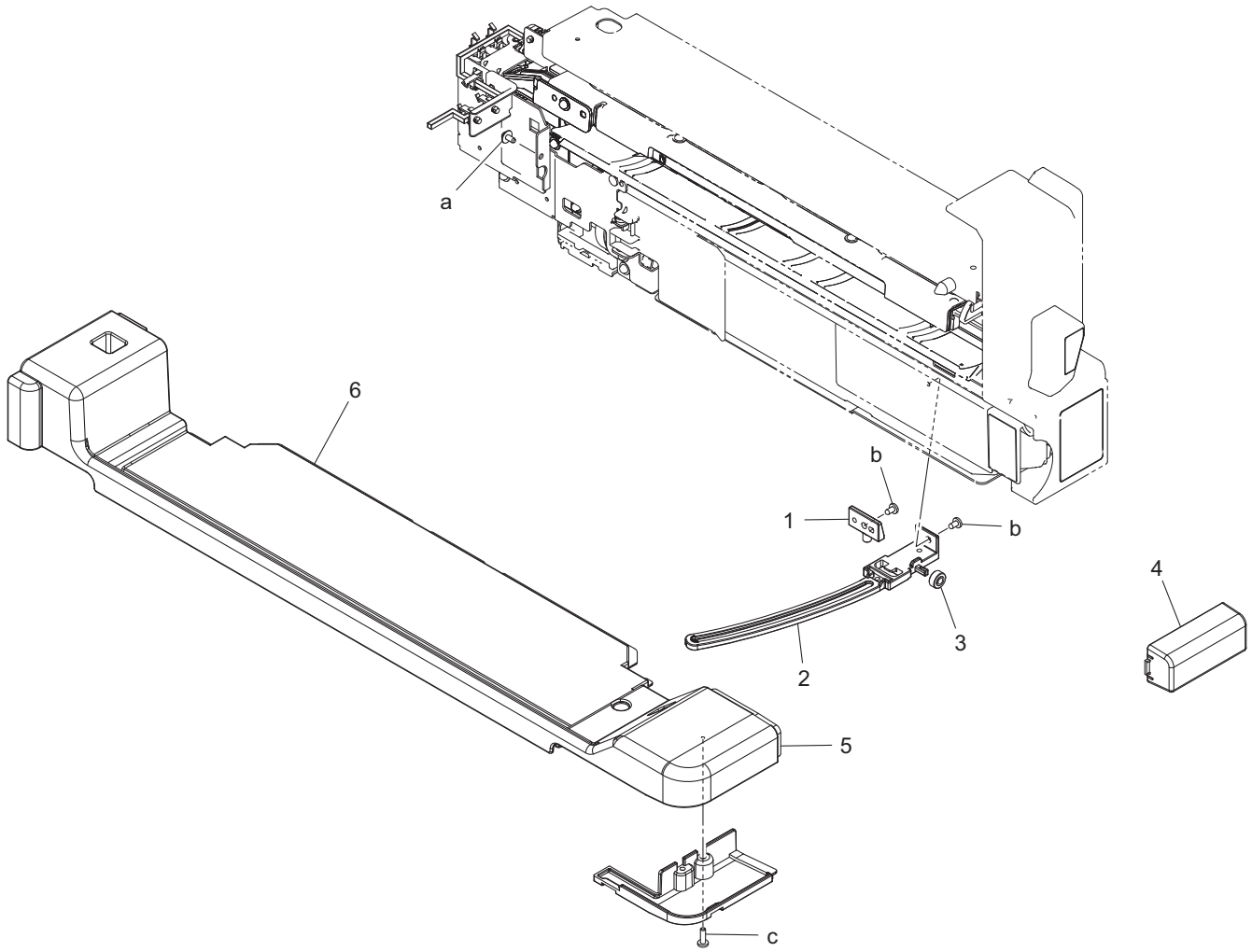

Page	Key	Parts No.	Description	Service Manual	Destinations	Class	Quantity
3	1	A3EWPP2200	Stopper			C	1
3	2	A3EWPP1901	Stopper			C	1
3	3	A3EWPP5400	Roll			C	1
3	4	A3EWPP0201	Cover			C	1
3	5	A3EWPP0300	Cover			C	1
3	6	A3EWPP0100	Cover			C	1
3	a	A0U7PP1400	SCREW			D	
3	b	A0U7PPAH00	Screw			D	
3	c	A3EWPP5100	Screw			D	

9.2 WIRING ACCESSORIES AND JIGS

1 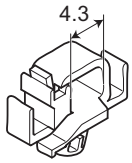	6	11	16	21	26	31	36
2 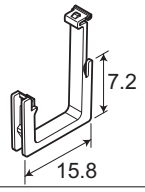	7	12	17	22	27	32	37
3	8	13	18	23	28	33	38
4	9	14	19	24	29	34	39
5	10	15	20	25	30	35	40

Page	Key	Parts No.	Description	Service Manual	Destinations	Class	Quantity
4	1	A0U7PP0D00	CODE CLAMP			D	
4	2	V570010046	SADDLE			D	

9.3 DESTINATION

Destination No.		Destinations		V	Hz	Model No.
A	A1	JAPAN		100	50/60	A3EUW01
	A2	JAPAN				
B		USA, CANADA		120	60	A3EUW11/A3EUW21
C		EUROPEAN TYPE		220-240	50/60	A3EUW11/A3EUW21/A3EUWG1
D	D1	S.E ASIA TYPE	THAILAND,SRI LANKA,SINGAPORE,MALAYSIA,HONGKONG, PAKISTAN,INDIA,BANGLADESH,INDONESIA	220-240	50/60	A3EUW11/A3EUW21
	D3	OCEAINA TYPE	AUSTRALIA,NEW ZEALAND	220-240	50/60	A3EUW11/A3EUW21
E		PHILIPPINES		220-240	50/60	A3EUW11/A3EUW21
F	F1	SAUDI ARABIA				
	F2	SAUDI ARABIA		220-240	50/60	A3EUW11/A3EUW21
G	G1	C.S AMERICA		220-240	50/60	A3EUW11/A3EUW21
	G2	C.S AMERICA		120	60	A3EUW11/A3EUW21
H		TAIWAN		110	60	A3EUW11/A3EUW21

I	JORDAN, LEBANON, SYRIA, SOUTH AFRICA, IRAQ, IRAN, N.YEMEN, CAMEROON, UAE, BAHRAIN, OMAN, QATAR, KUWAIT, KENYA, TUNISIA, IVORY COAST, MOROCCO	220-240	50/60	A3EUW11/A3EUW21
J	CHINA	220-240	50/60	A3EUW11/A3EUW21
K	KOREA	220-240	50/60	A3EUW11/A3EUW21

10. PUNCH UNIT (PK-520)

10.1 PUNCH UNIT

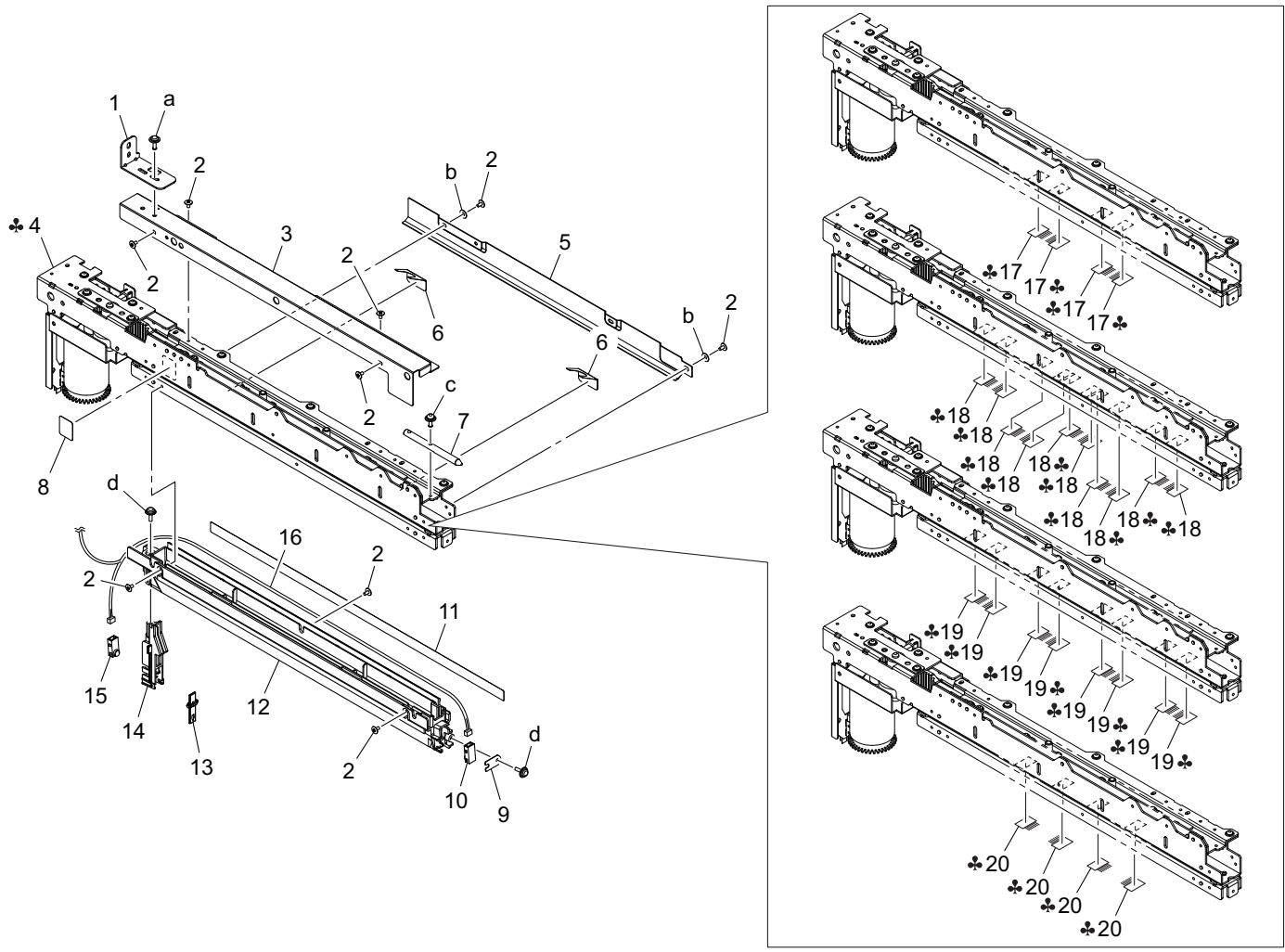

Page	Key	Parts No.	Description	Service Manual	Destinations	Class	Quantity
1	1	A3ET910500	Fixing Plate			D	1
1	2	A0P0109200	Screw			V	9
1	3	A3ET910600	Guide Plate			D	1
1	4	A4JUR70000	Punch Unit 2 Holes		A,A1	C	1
1	4	A4JUR70100	Punch Unit 2/3 Holes		B,G2,C,D1,D3,E,F2,G1,H,I,J,K	C	1
1	4	A4JUR70200	Punch Unit 2/4 Holes		B,G2,C,D1,D3,E,F2,G1,H,I,J,K	C	1
1	4	A4JUR70300	Punch Unit 4 Holes/SW		C(SWEDEN)	C	1
1	5	A3ET910900	Guide Plate /Upper			D	1
1	6	A3ET911200	Punch Guide		(2/3 Hole Type)	C	2
1	7	A3ET910400	Positioning Pin			D	1
1	8	4040737401	LABEL			D	1
1	9	A3ET911500	Holding Part			D	1
1	10	A3ETM50000	Separating Sensor	Punch dust full sensor/out (PS4)		I	1
1	11	A3ET911400	Cover Sheet			D	1
1	12	A3ET910702	Duct			D	1
1	13	A3ET911100	Detecting Plate			D	1
1	14	A3ET911000	Sensor Holder			D	1
1	15	A3ETM50100	Separating Sensor	Punch dust full sensor/in (PS5)		I	1
1	16	A3ETN10001	Drive Wiring			D	1
1	17	13NK50380	NEUTRALIZING BRUSH C		A,A1	C	4

1	18	13NK50380	NEUTRALIZING BRUSH C		B,G2,C,D1,D3,E,F2,G1,H,I,J,K	C	10
1	19	13NK50380	NEUTRALIZING BRUSH C		B,G2,C,D1,D3,E,F2,G1,H,I,J,K	C	8
1	20	13NK50380	NEUTRALIZING BRUSH C		C(SWEDEN)	C	4
1	a	V137030803	screw			V	
1	b	V207030003	washer			V	
1	c	V116030803	Screw			V	
1	d	V153030803	Screw			V	

10.2 WIRING ACCESSORIES AND JIGS

1 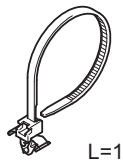	6	11	16	21	26	31	36
2 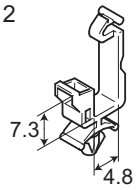	7	12	17	22	27	32	37
3	8	13	18	23	28	33	38
4	9	14	19	24	29	34	39
5	10	15	20	25	30	35	40

Page	Key	Parts No.	Description	Service Manual	Destinations	Class	Quantity
2	1	V501010018	BAND			D	
2	2	V500010020	Saddle			D	

10.3 ACCESSORY PARTS

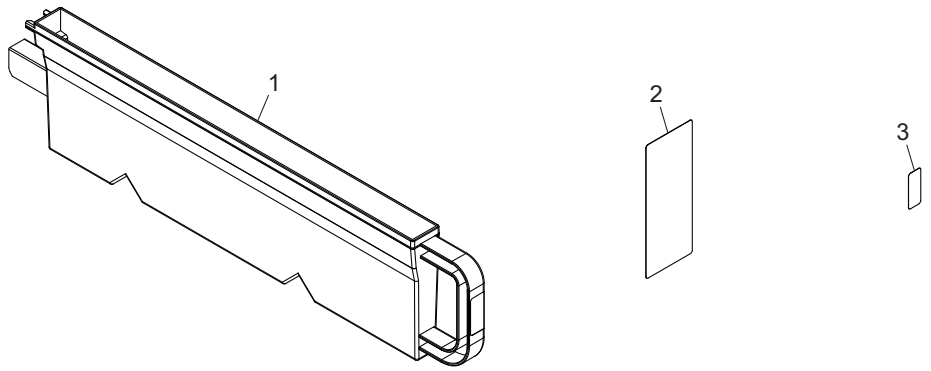

Page	Key	Parts No.	Description	Service Manual	Destinations	Class	Quantity
3	1	A3ET910800	Collection Box			C	1
3	2	A3ET940000	Label			C	1
3	3	A3ET940100	Label			C	1

10.4 DESTINATION

Destination No.		Destinations		V	Hz	Model No.
A	A1	JAPAN		100	50/60	A3ETW01
	A2	JAPAN				
B		USA, CANADA		120	60	A3ETW11/A3ETW21
C		EUROPEAN TYPE		220-240	50/60	A3ETW11/A3ETW21/A3ETWG1
D	D1	S.E ASIA TYPE	THAILAND,SRI LANKA,SINGAPORE,MALAYSIA,HONGKONG, PAKISTAN,INDIA,BANGLADESH,INDONESIA	220-240	50/60	A3ETW11/A3ETW21
	D3	OCEAINA TYPE	AUSTRALIA,NEW ZEALAND	220-240	50/60	A3ETW11/A3ETW21
E		PHILIPPINES		220-240	50/60	A3ETW11/A3ETW21
F	F1	SAUDI ARABIA				
	F2	SAUDI ARABIA		220-240	50/60	A3ETW11/A3ETW21
G	G1	C.S AMERICA		220-240	50/60	A3ETW11/A3ETW21
	G2	C.S AMERICA		120	60	A3ETW11/A3ETW21
H		TAIWAN		110	60	A3ETW11/A3ETW21

I	JORDAN, LEBANON, SYRIA, SOUTH AFRICA, IRAQ, IRAN, N.YEMEN, CAMEROON, UAE, BAHRAIN, OMAN, QATAR, KUWAIT, KENYA, TUNISIA, IVORY COAST, MOROCCO	220-240	50/60	A3ETW11/A3ETW21
J	CHINA	220-240	50/60	A3ETW11/A3ETW21
K	KOREA	220-240	50/60	A3ETW11/A3ETW21

11. PAPER FEEDER (PC-110)

11.1 EXTERNAL PARTS

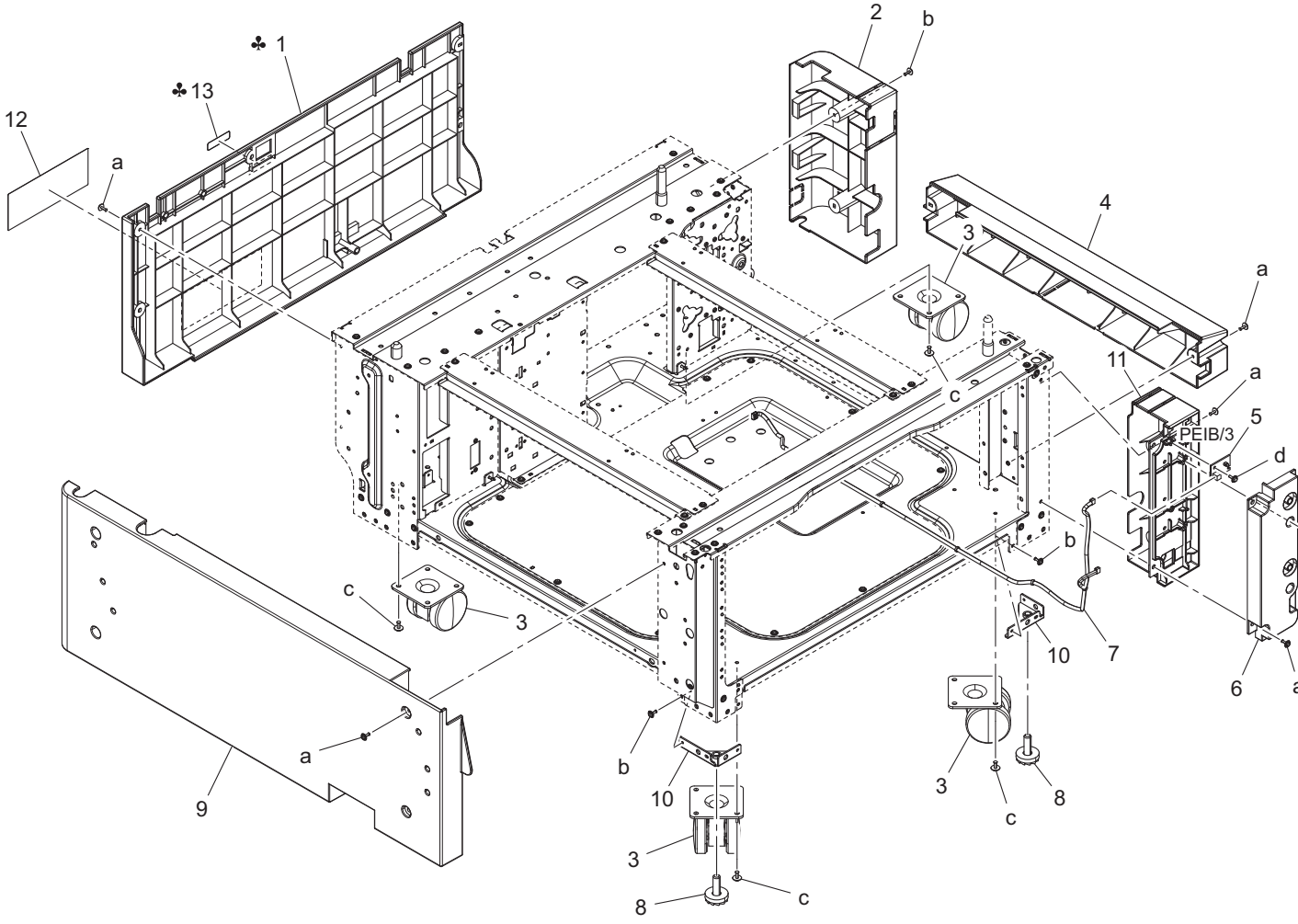

Page	Key	Parts No.	Description	Service Manual	Destinations	Class	Quantity
1	1	A2XM570200	Cover /Rear		A,A1	C	1
1	1	A2XM570801	Cover /Rear		B,C,D1,D3,E,F2,G1,G2,H,I,J,K	C	1
1	2	A2XM570301	Cover /Right rear			C	1
1	3	4061101000	Castor			C	4
1	4	A2XM570400	Cover /Right			C	1
1	5	A00JH00D00	PWB Assembly LED1			C	1
1	6	A2XM570500	Cover			C	1
1	7	A2XMN10G02	Indicating Wiring /3			D	1
1	8	4348202401	ADJUSTING PLATE			D	2
1	9	A2XM570100	Cover /Left			C	1
1	10	A2XM561000	Mounting Plate			D	2
1	11	A2XM570600	Cover /Right front			C	1
1	12	A2XM942300	Label			C	1
1	13	A093940800	Label		A,A1	C	1
1	a	V137030804	screw			V	
1	b	V137030803	screw			V	
1	c	V137040803	SCREW			V	
1	d	V153030803	Screw			V	
1	e	V153030804	screw			V	

11.2 FRAME SECTION

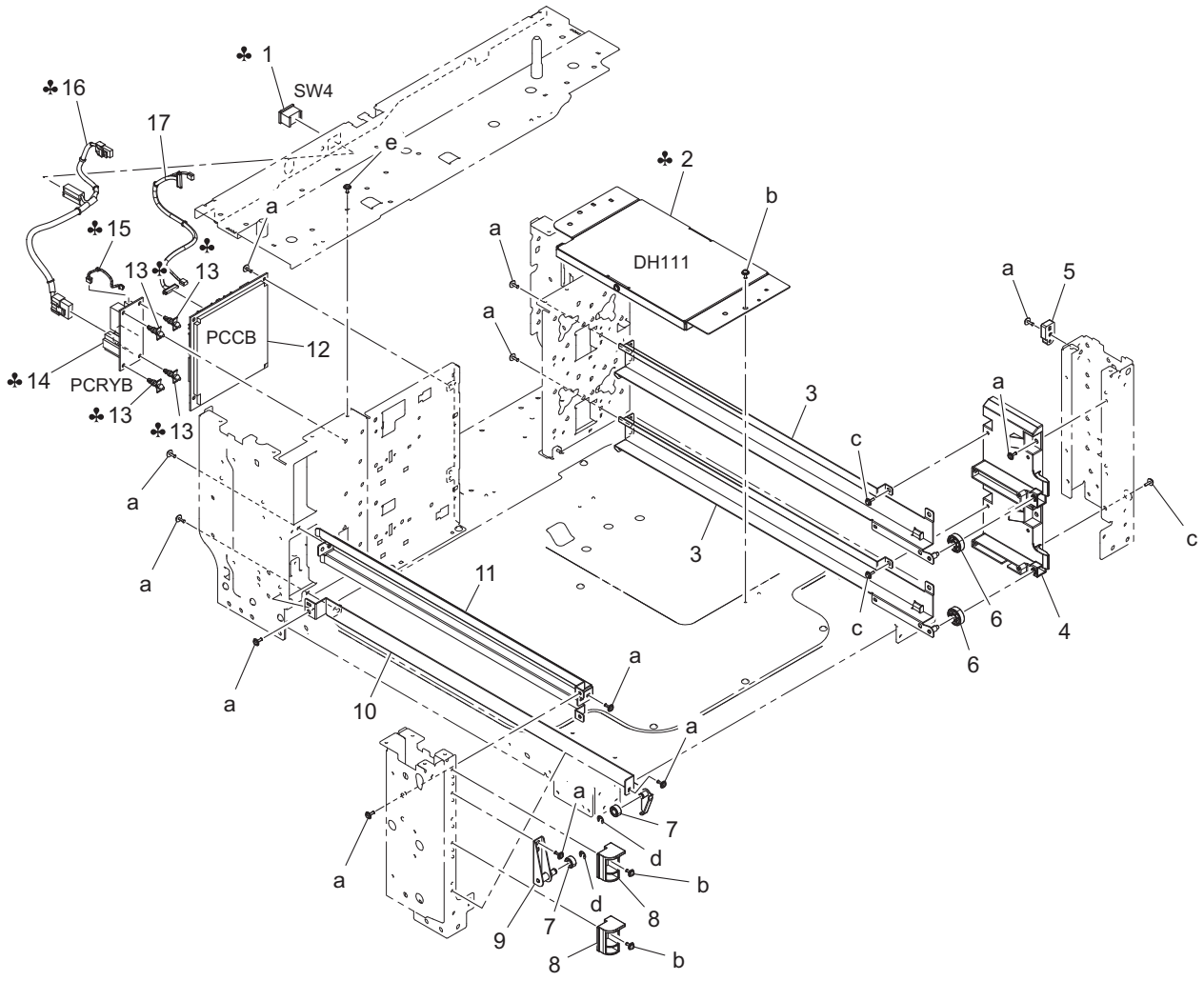

Page	Key	Parts No.	Description	Service Manual	Destinations	Class	Quantity
2	1	A093M60000	Rocker switch		A,A1	C	1
2	2	A2XMR70000	Heater Assy		A,A1	D	1
2	3	A2XM561801	Rail			D	2
2	4	A2XM562001	Holder			D	1
2	5	A2XM562100	Holder			D	1
2	6	A161103901	Roll			D	2
2	7	A161623400	Roll			D	2
2	8	A2XM562601	Stopper			D	2
2	9	A2XM561501	Mounting Plate			D	1
2	10	A2XM561700	Rail			D	1
2	11	A2XM561600	Rail			D	1
2	12	A2XMH00101	PWB Assembly(PWB-CB_1 ASSY)			I	1
2	13	V502010033	spacer		A,A1	D	4
2	14	A093H00100	PWB Assy		A,A1	C	1
2	15	A2XMN10E00	Heater Wiring		A,A1	D	1
2	16	A2XMN10001	Heater Relay harness		A,A1	D	1
2	17	A2XMN10101	Main body Relay harness			C	1
2	a	V137030803	screw			V	
2	b	V116030803	Screw			V	
2	c	V153030803	Screw			V	
2	d	V217040001	E Ring			V	
2	e	V144030803	SCREW			V	

11.3 PAPER FEED DRIVE SECTION

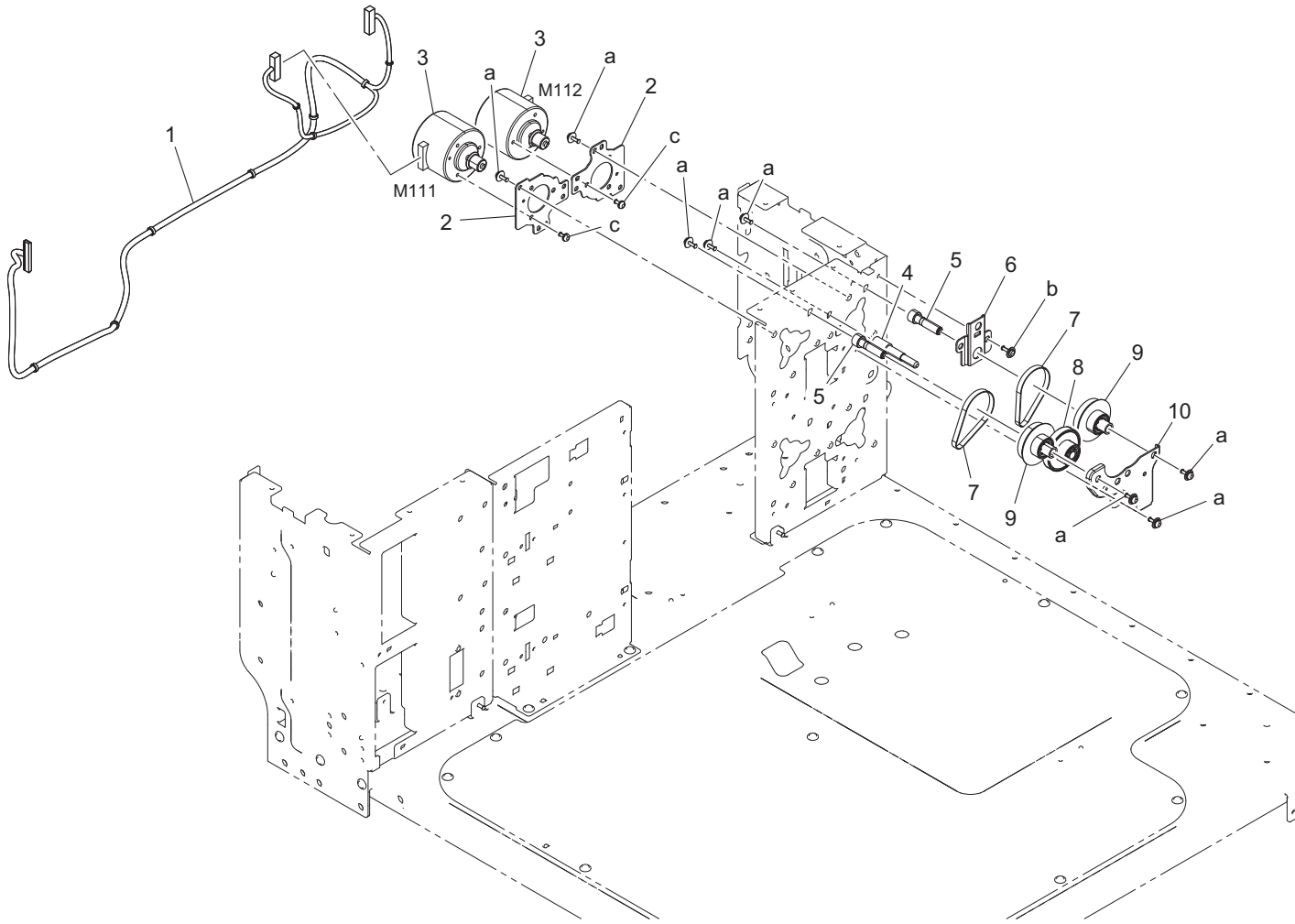

Page	Key	Parts No.	Description	Service Manual	Destinations	Class	Quantity
3	1	A2XMN10H00	Drive Wiring /1			D	1
3	2	A2XM590300	Mounting Plate			D	2
3	3	A2XMM10000	Brushless motor			C	2
3	4	A2XM591600	Shaft			C	1
3	5	A2XM591500	Shaft			C	2
3	6	A2XM590900	Mounting Plate			D	1
3	7	A2XM592700	Belt			C	2
3	8	A2XM592200	Gear			C	1
3	9	A2XM592100	Pulley			C	2
3	10	A2XM590500	Mounting Plate			D	1
3	a	V116030803	Screw			V	
3	b	V137030803	screw			V	
3	c	V115030603	Screw			V	

11.4 CASSETTE SIZE SECTION

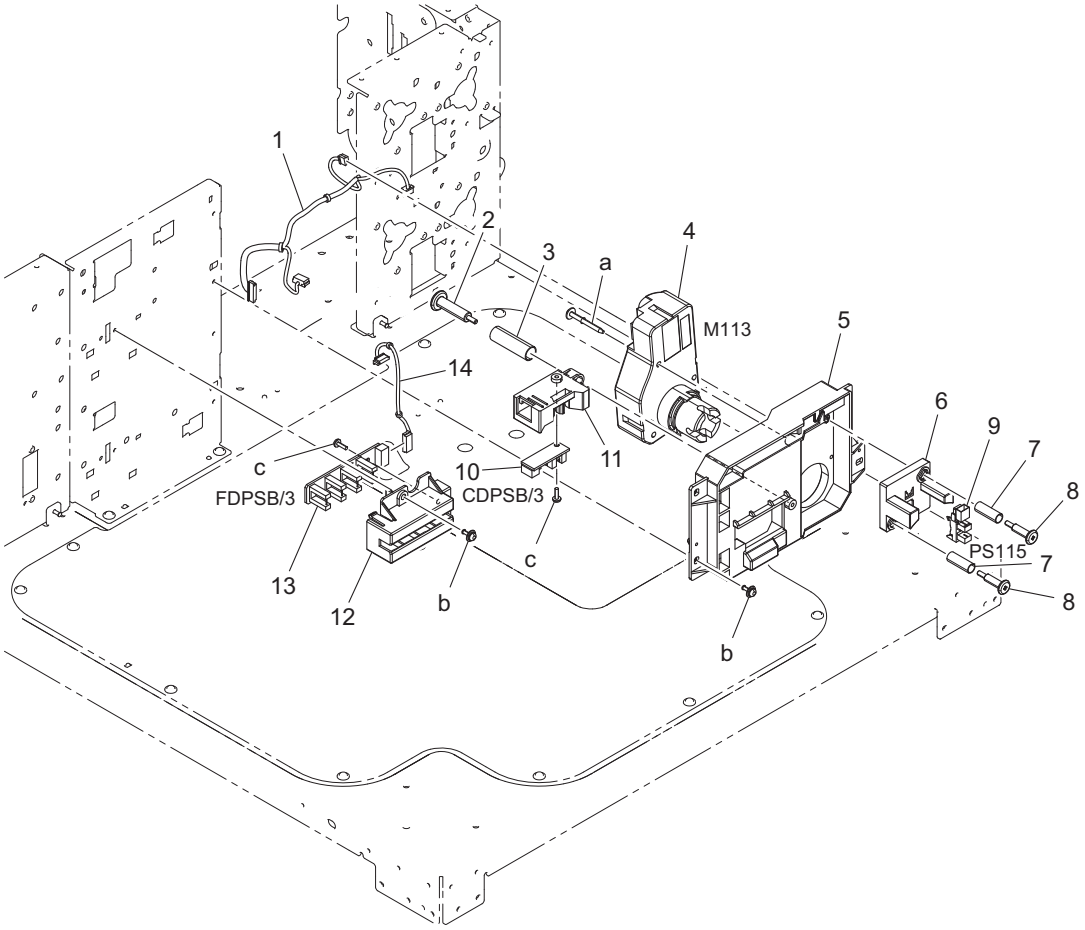

Page	Key	Parts No.	Description	Service Manual	Destinations	Class	Quantity
4	1	A2XMN10D00	Paperfeed Wiring /1			D	1
4	2	A161627801	Shoulder screw			C	1
4	3	4002311002	Pressure Spring			C	1
4	4	9J06M10300	MOTOR			B	1
4	5	A161627102	Holder			D	1
4	6	A161627300	Holder			D	1
4	7	A0ED627600	Compressing Coil spring			D	2
4	8	A161627701	Shoulder screw			C	2
4	9	A108M50100	Photointerrupter			B	1
4	10	A161M50501	Photointerrupter			C	1
4	11	A161627500	Holder			C	1
4	12	A161628000	Holder			C	1
4	13	A161M50600	Photointerrupter			C	1
4	14	A2XMN10F00	Paperfeed Wiring /2			D	1
4	a	V153033003	screw			V	
4	b	V116030803	Screw			V	
4	c	V145030803	screw			V	

11.5 PAPER TRANSPORT SECTION

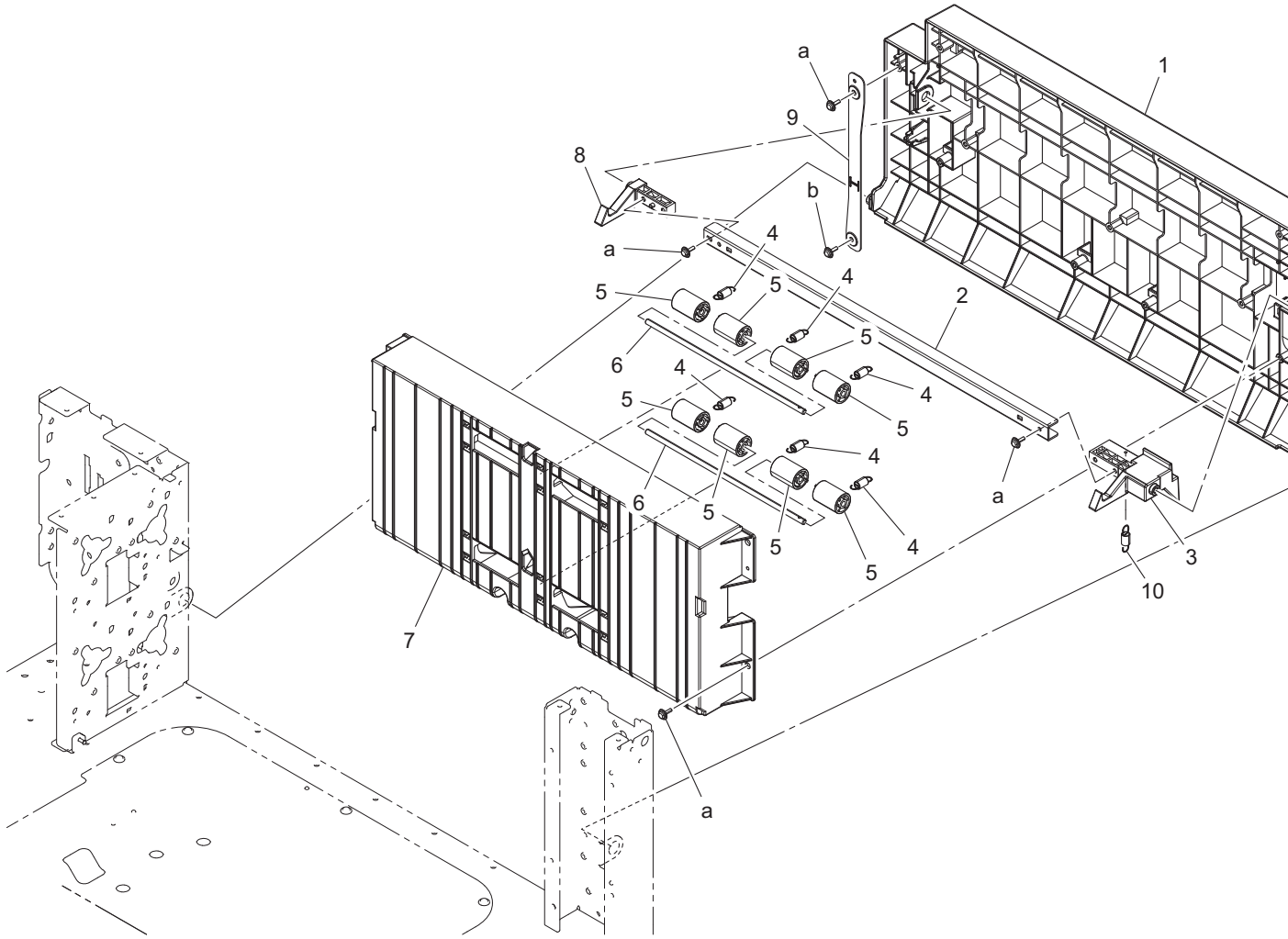

Page	Key	Parts No.	Description	Service Manual	Destinations	Class	Quantity
5	1	A2XM563101	Door			C	1
5	2	A2XM563400	Connecting Plate			D	1
5	3	A2XM563900	Lock			C	1
5	4	A161815500	Pulling Spring			C	6
5	5	A161815400	Roll			C	8
5	6	A161815300	Shaft			D	2
5	7	A2XM563501	Guide			C	1
5	8	4348305301	PAWL			C	1
5	9	A2XM563600	Band			C	1
5	10	A2XM564000	Pulling Coil spring			C	1
5	a	V153030803	Screw			V	
5	b	V116030803	Screw			V	

11.6 PAPER TAKE-UP SECTION

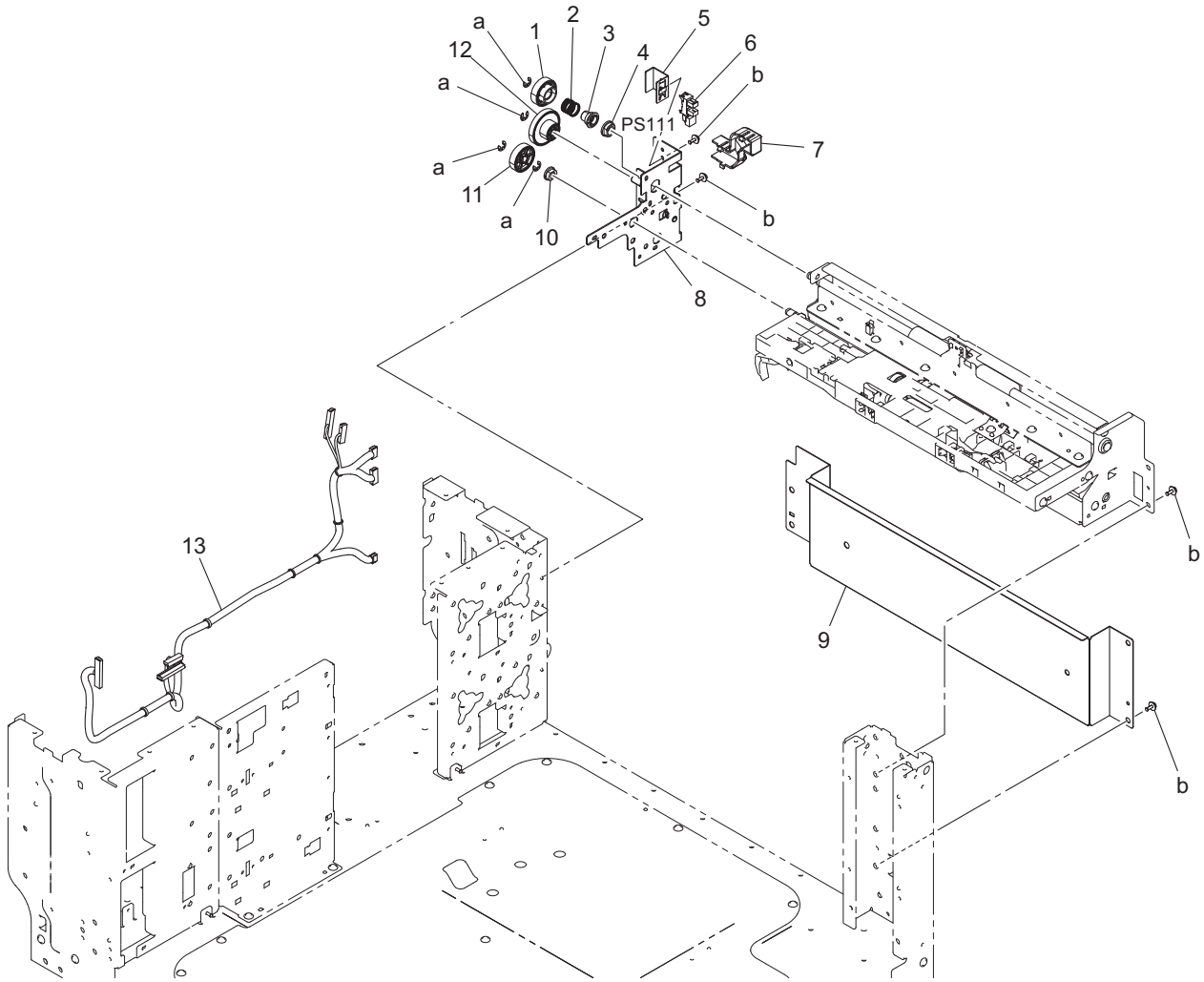

Page	Key	Parts No.	Description	Service Manual	Destinations	Class	Quantity
6	1	A2XM592400	Gear			C	1
6	2	A2XM592602	Spring			C	1
6	3	A2XM592500	Guide			C	1
6	4	4131353202	BUSHING			C	1
6	5	A2XM590800	Mounting Plate			D	1
6	6	A108M50100	Photointerrupter			B	1
6	7	A2XM593500	Cover			D	1
6	8	A2XMG56100	FRAME ASSY			D	1
6	9	A2XM561301	Cover			D	1
6	10	4131300301	BUSHING			C	1
6	11	A2XM592300	Gear			C	1
6	12	A2XM592200	Gear			C	1
6	13	A2XMN10300	Paperfeed Relay harness / 2			D	1
6	a	V217040001	E Ring			V	
6	b	V116030803	Screw			V	

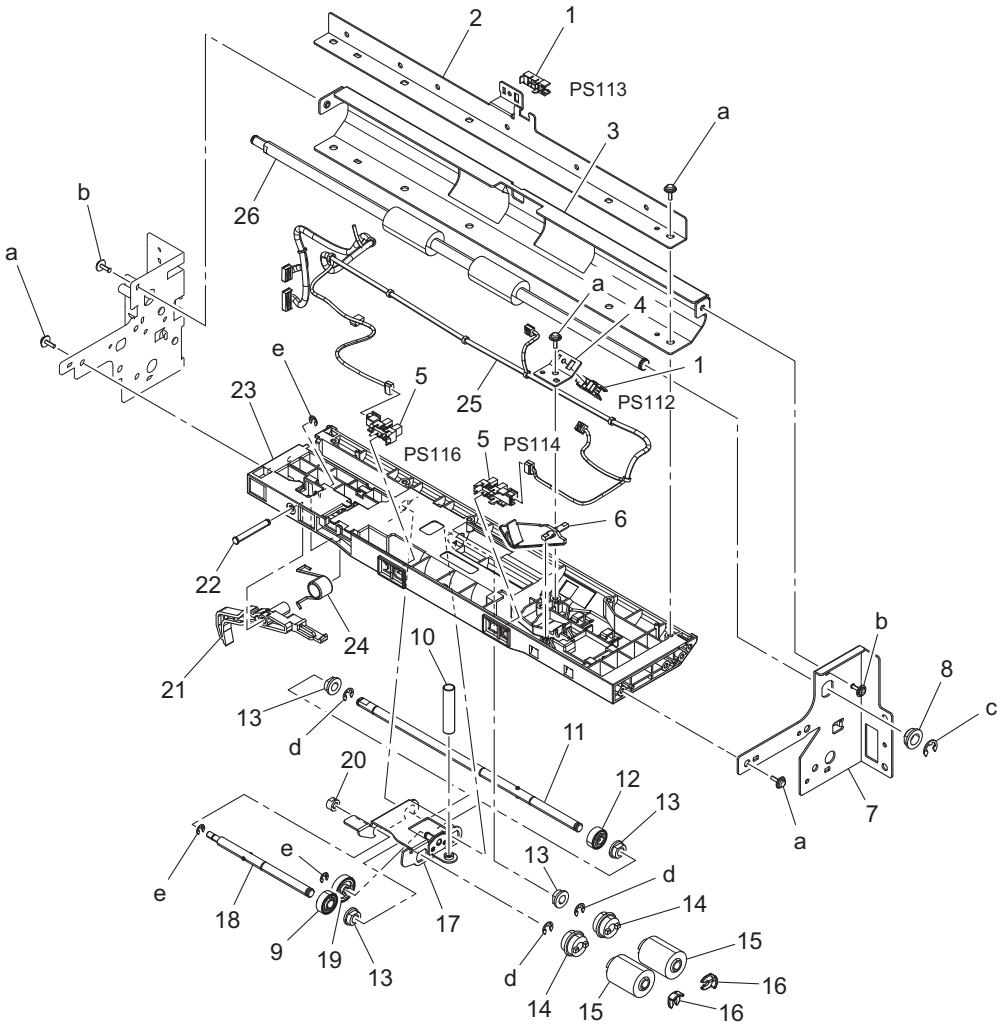

Page	Key	Parts No.	Description	Service Manual	Destinations	Class	Quantity
7	1	A0EDM50100	Photoreflector			I	2
7	2	A2XM565900	Reinforce Plate			D	1
7	3	A2XM566000	Guide Plate			C	1
7	4	A161560900	Mounting Plate			D	1
7	5	A108M50100	Photointerrupter			B	2
7	6	A161561600	Actuator			C	1
7	7	A2XM565800	Frame			D	1
7	8	4131353202	BUSHING			C	1
7	9	A161562600	Gear 28T			C	1
7	10	A161562800	Compressing Coil spring			C	1
7	11	A2XM565200	Shaft			C	1
7	12	A161562400	Gear 26T			C	1
7	13	4131300301	BUSHING			C	4
7	14	A02E561100	Clutch			C	2
7	15	A00J563600	Roller			A	2
7	16	56AA40490	SHAFT STOPPER 4			C	2
7	17	A161562101	Holder			D	1
7	18	A161562000	Shaft			D	1
7	19	A161562300	Gear 34T			C	1
7	20	A161562500	Bushing			C	1
7	21	A161567300	Lever			C	1
7	22	A02E560800	Shaft			D	1
7	23	A161560300	Paper feed Frame			D	1
7	24	A161567400	Torsion Spring			C	1

7	25	A2XMN10702	Conveyance Detection harness /2			D	1
7	26	A2XM565400	Drive Roller			C	1
7	a	V153030803	Screw			V	
7	b	V137030803	screw			V	
7	c	V217060001	E Ring			V	
7	d	V217040001	E Ring			V	
7	e	V217030001	E Ring			V	

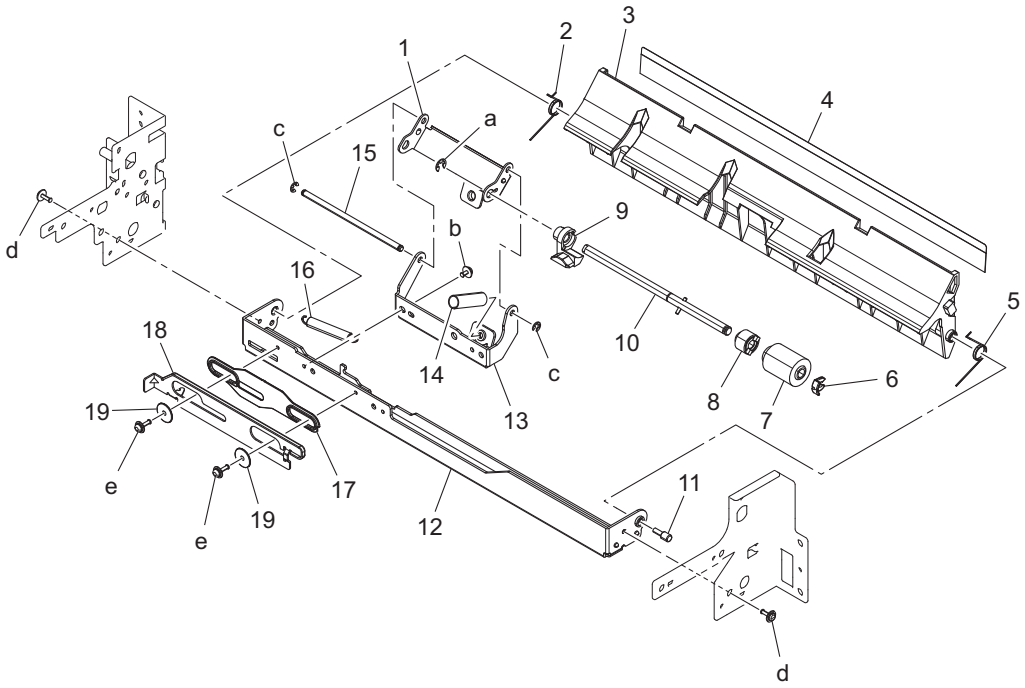

Page	Key	Parts No.	Description	Service Manual	Destinations	Class	Quantity
8	1	A2XM567400	Holder			C	1
8	2	A161568800	Torsion Coil spring			C	1
8	3	A2XM566101	Guide Plate			C	1
8	4	A2XM566200	Guide			C	1
8	5	A161568700	Torsion Coil spring			C	1
8	6	56AA40490	SHAFT STOPPER 4			C	1
8	7	A00J563600	Roller			A	1
8	8	A0ED563900	Torque limiter			C	1
8	9	A161563501	Guide			D	1
8	10	A161563400	Shaft			D	1
8	11	4532341001	SHOULDER SCREW			D	1
8	12	A2XM566702	Mounting Plate			D	1
8	13	A2XM566902	Mounting Plate			D	1
8	14	4030301703	PRESSURE SPRING			C	1
8	15	A161563300	Shaft			D	1
8	16	A161564400	Pulling Coil spring			C	1
8	17	A161564200	Spacer			D	1

8	18	A161564100	Lever			D	1
8	19	A161564300	Spacer			D	2
8	a	V217040001	E Ring			V	
8	b	V116030603	Screw			V	
8	c	V217030001	E Ring			V	
8	d	V137030803	screw			V	
8	e	V116031003	Screw			V	

11.7 3rd PAPER TRAY UNIT

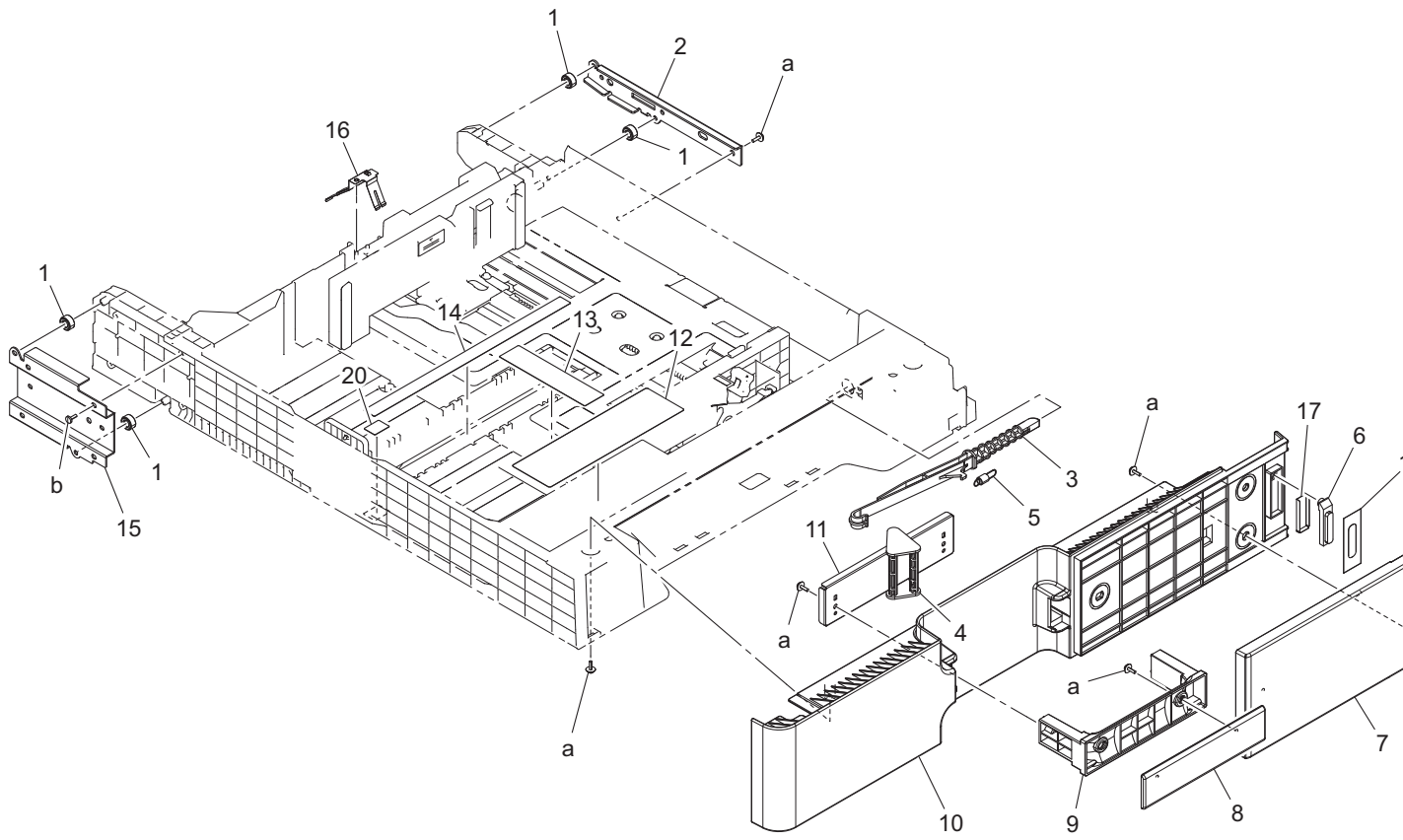

Page	Key	Parts No.	Description	Service Manual	Destinations	Class	Quantity
9	1	A161623400	Roll			D	4
9	2	A161623101	Reinforce Plate /Right			D	1
9	3	A161636502	Lever			C	1
9	4	A161626601	Lever			C	1
9	5	A161626800	Pulling Coil spring			C	1
9	6	A161626000	Lens			D	1
9	7	A2XM568300	Cover			C	1
9	8	A161625900	Cover			C	1
9	9	A161626900	Handle			C	1
9	10	A2XM568102	Cover			C	1
9	11	A2XM569200	Holder			D	1
9	12	A161943801	Label			C	1
9	13	A02E941500	Label Cd			C	1
9	14	A00J942202	Label FD			C	1
9	15	A161623201	Reinforce Plate /Left			D	1
9	16	A161622100	Ground Plate			D	1

9	17	A161626200	Sheet			D	1
9	18	A161626100	Light blocking Sheet			D	1
9	19	A2XM940100	Label			C	1
9	20	A02E941300	Label Fd			C	1
9	a	V153030803	Screw			V	
9	b	V149030803	screw			V	

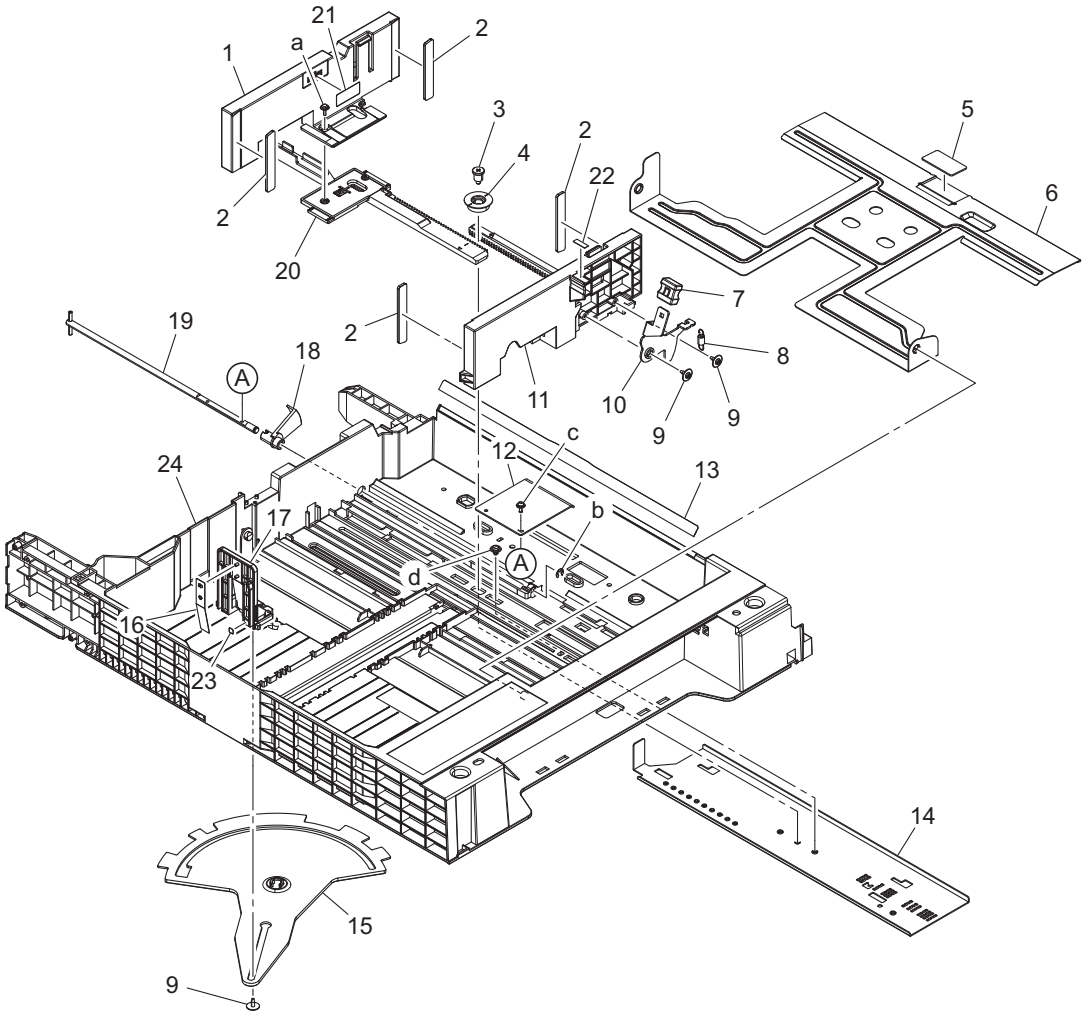

Page	Key	Parts No.	Description	Service Manual	Destinations	Class	Quantity
10	1	A161620903	Regulating Plate /Rear			C	1
10	2	A161624100	Cushion			C	4
10	3	A161620600	Shoulder screw			D	1
10	4	A161620701	Gear			D	1
10	5	4030322601	FRICTION SHEET			C	1
10	6	A161620400	Lifting Plate			D	1
10	7	4037320401	KNOB			C	1
10	8	A0ED621400	Pulling Coil spring			D	1
10	9	4163529301	SCREW			C	3
10	10	A161621300	Lever			D	1
10	11	A161620802	Regulating Plate /Front			C	1
10	12	4030320601	LEVER			D	1
10	13	A0ED620200	Guide			C	1
10	14	A161621900	Mounting Plate			D	1
10	15	A161621400	Lever			C	1
10	16	A161621800	Plate spring			C	1
10	17	A161621701	Regulating Plate			C	1
10	18	A0ED620701	Actuator			C	1
10	19	A161621600	Lifting Shaft			D	1

10	20	A161621100	Rack			C	1
10	21	A161943700	Label Max Level			C	1
10	22	A161943000	Label			C	1
10	23	A02E940300	Label			C	1
10	24	A161620103	Paper feed Cassette			D	1
10	a	V153030803	Screw			V	
10	b	V217040001	E Ring			V	
10	c	V116030803	Screw			V	
10	d	V144040603	SCREW			V	

11.8 RECEIPT TRAY

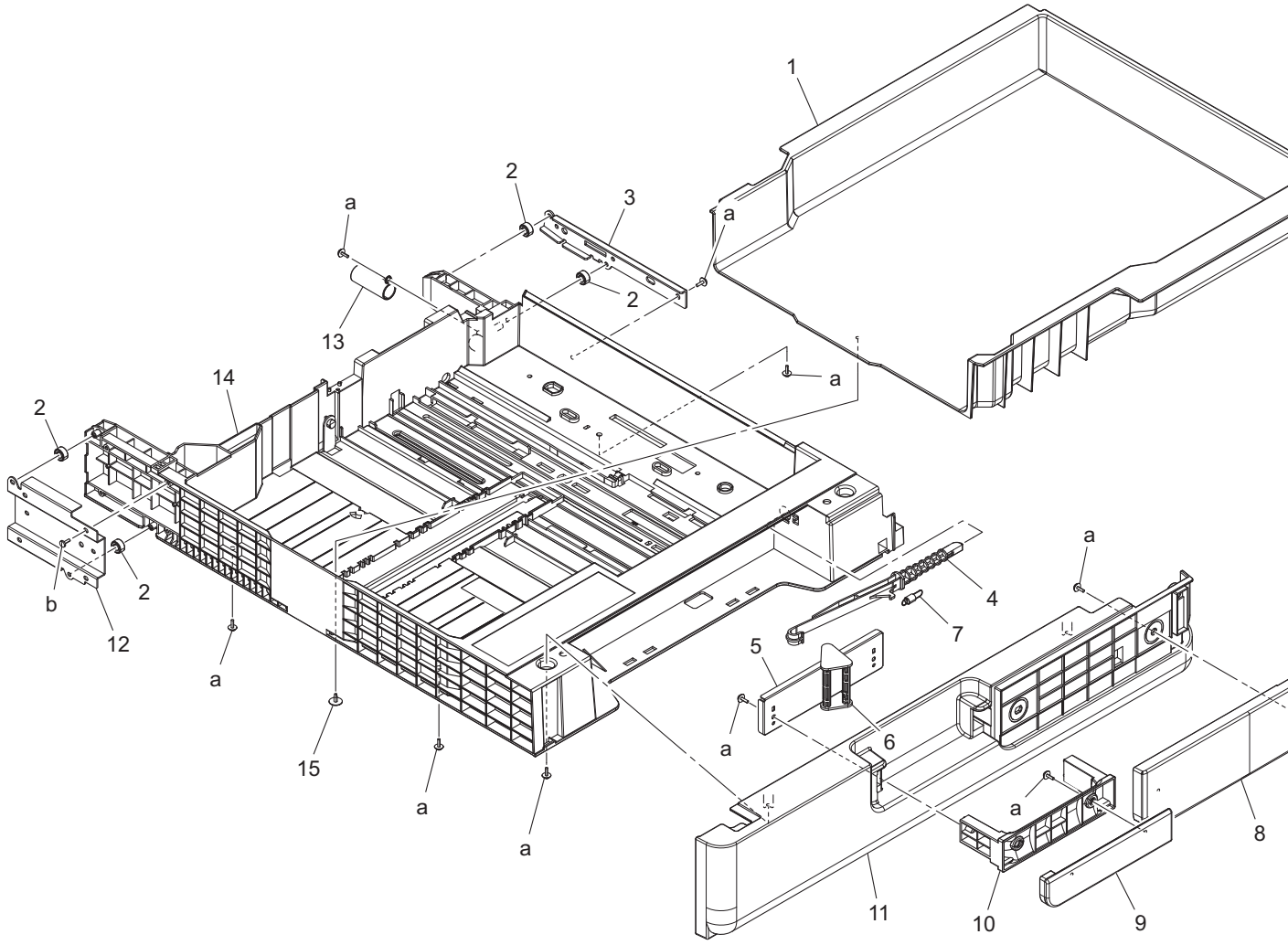

Page	Key	Parts No.	Description	Service Manual	Destinations	Class	Quantity
11	1	A2XM569001	Cassette			D	1
11	2	A161623400	Roll			D	4
11	3	A161623101	Reinforce Plate /Right			D	1
11	4	A161636502	Lever			C	1
11	5	A2XM569200	Holder			D	1
11	6	A161626601	Lever			C	1
11	7	A161626800	Pulling Coil spring			C	1
11	8	A2XM568800	Cover			C	1
11	9	A2XM568700	Cover			C	1
11	10	A161626900	Handle			C	1
11	11	A2XM568202	Cover			C	1
11	12	A161623201	Reinforce Plate /Left			D	1
11	13	A161627000	Compressing Coil spring			C	1
11	14	A161620103	Paper feed Cassette			D	1

11	15	4163529301	SCREW			C	1
11	a	V153030803	Screw			V	
11	b	V149030803	screw			V	

11.9 WIRING ACCESSORIES AND JIGS

1 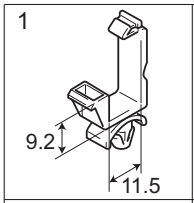	6 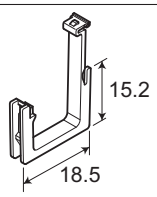						
2 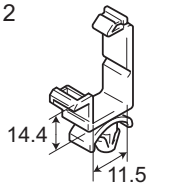							
3 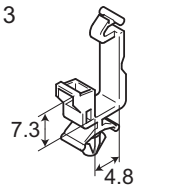							
4 White 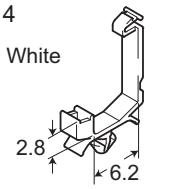							
5 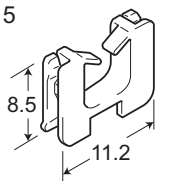							

Page	Key	Parts No.	Description	Service Manual	Destinations	Class	Quantity
12	1	V500010005	saddle			D	
12	2	V500010007	saddle			D	
12	3	V500010020	Saddle			D	
12	4	V500010046	saddle			D	
12	5	V570010021	Saddle			D	
12	6	V570010026	saddle			D	

11.10 ACCESSORY PARTS

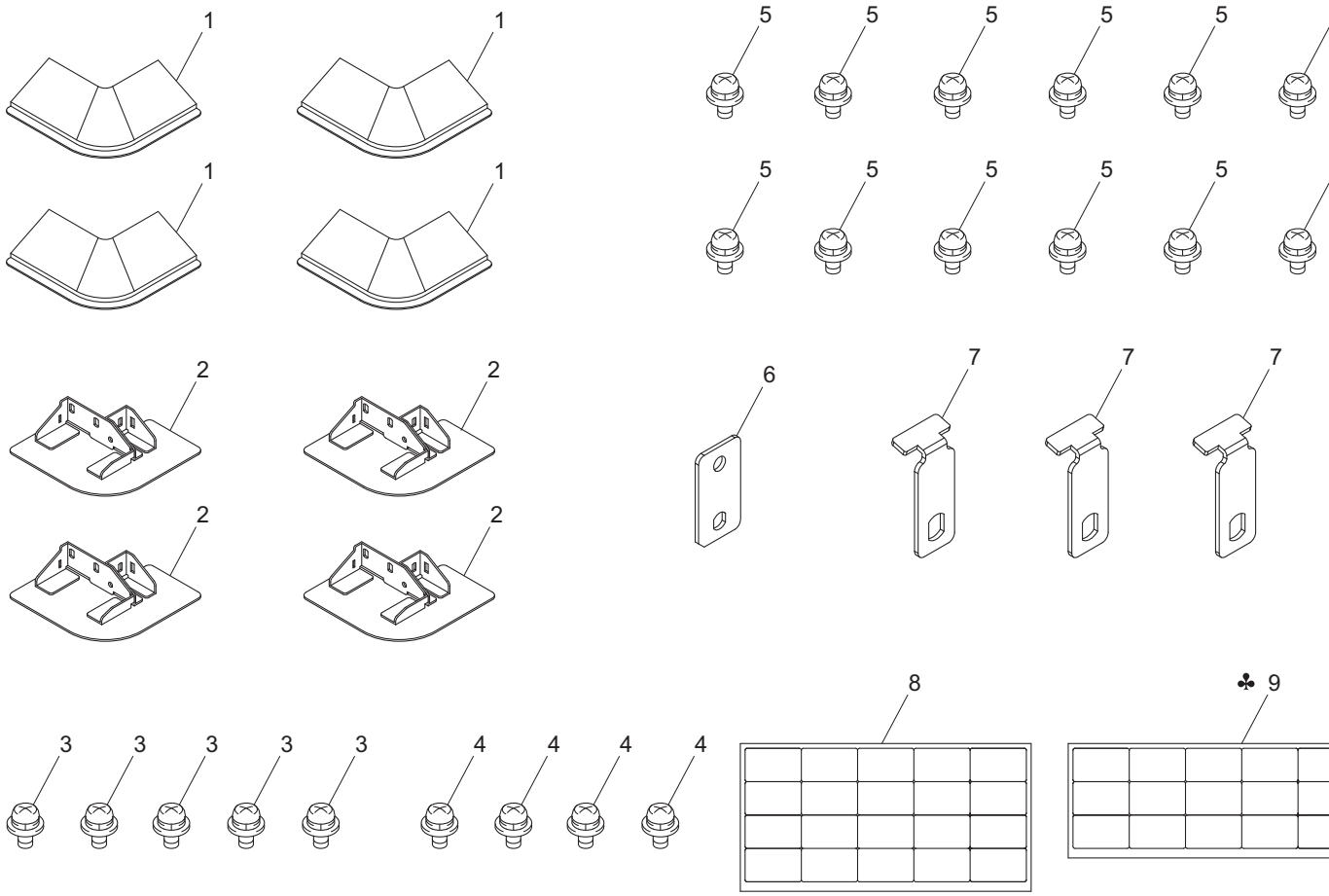

Page	Key	Parts No.	Description	Service Manual	Destinations	Class	Quantity
13	1	4348204301	COVER			C	4
13	2	4348202502	STOP PLATE			C	4
13	3	V116040804	Screw			V	5
13	4	V137040803	SCREW			V	4
13	5	V116040803	Screw			V	12
13	6	A093104001	Stop plate			C	1
13	7	A0XW608300	Connecting Plate			C	3
13	8	A161943300	Label Paper Size/Metric			C	1
13	9	A161943400	Label Paper Size/Inch		B,C,D1,D3,E,F2,G1,G2,H,I,J,K	C	1

11.11 MAINTENANCE LIST

- The items with no Page/Key numbers are not handled as spare parts.

No.	Section	PM Parts Description	Maintenance Cycle (K=1,000)		Parts No.	Destinations	Page/Key	Note
			QTY	Replace				
1	Paper Take-up Section	Pick-up roller	1	300K	A00J563600		P7-15	*1 *2
2		Feed roller	1	300K	A00J563600		P7-15	*1 *2
3		Separation roller	1	300K	A00J563600		P8-7	*1 *2

- *1: Actual durable cycle (life counter value)
- *2: Replace those parts at the same time.

11.12 DESTINATION

Destination No.		Destinations	V	Hz	Model No.
A	A1	JAPAN	100	50/60	A2XM-001

	A2	JAPAN				
B		USA, CANADA		120	60	A2XM-XY1
C		EUROPEAN TYPE		220-240	50/60	A2XM-XY1
D	D1	S.E ASIA TYPE	THAILAND,SRI LANKA,SINGAPORE,MALAYSIA,HONGKONG, PAKISTAN,INDIA,BANGLADESH,INDONESIA	220-240	50/60	A2XM-XY1
	D3	OCEAINA TYPE	AUSTRALIA,NEW ZEALAND	220-240	50/60	A2XM-XY1
E		PHILIPPINES		220-240	50/60	A2XM-XY1
F	F1	SAUDI ARABIA				
	F2	SAUDI ARABIA		220-240	50/60	A2XM-XY1
G	G1	C.S AMERICA		220-240	50/60	A2XM-XY1
	G2	C.S AMERICA		120	60	A2XM-XY1
H		TAIWAN		110	60	A2XM-XY1
I		JORDAN, LEBANON, SYRIA, SOUTH AFRICA, IRAQ, IRAN, N.YEMEN, CAMEROON, UAE, BAHRAIN, OMAN, QATAR, KUWAIT, KENYA, TUNISIA, IVORY COAST, MOROCCO		220-240	50/60	A2XM-XY1
J		CHINA		220-240	50/60	A2XM-XY1
K		KOREA		220-240	50/60	A2XM-XY1

12. PAPER FEEDER (PC-210)

12.1 EXTERNAL PARTS

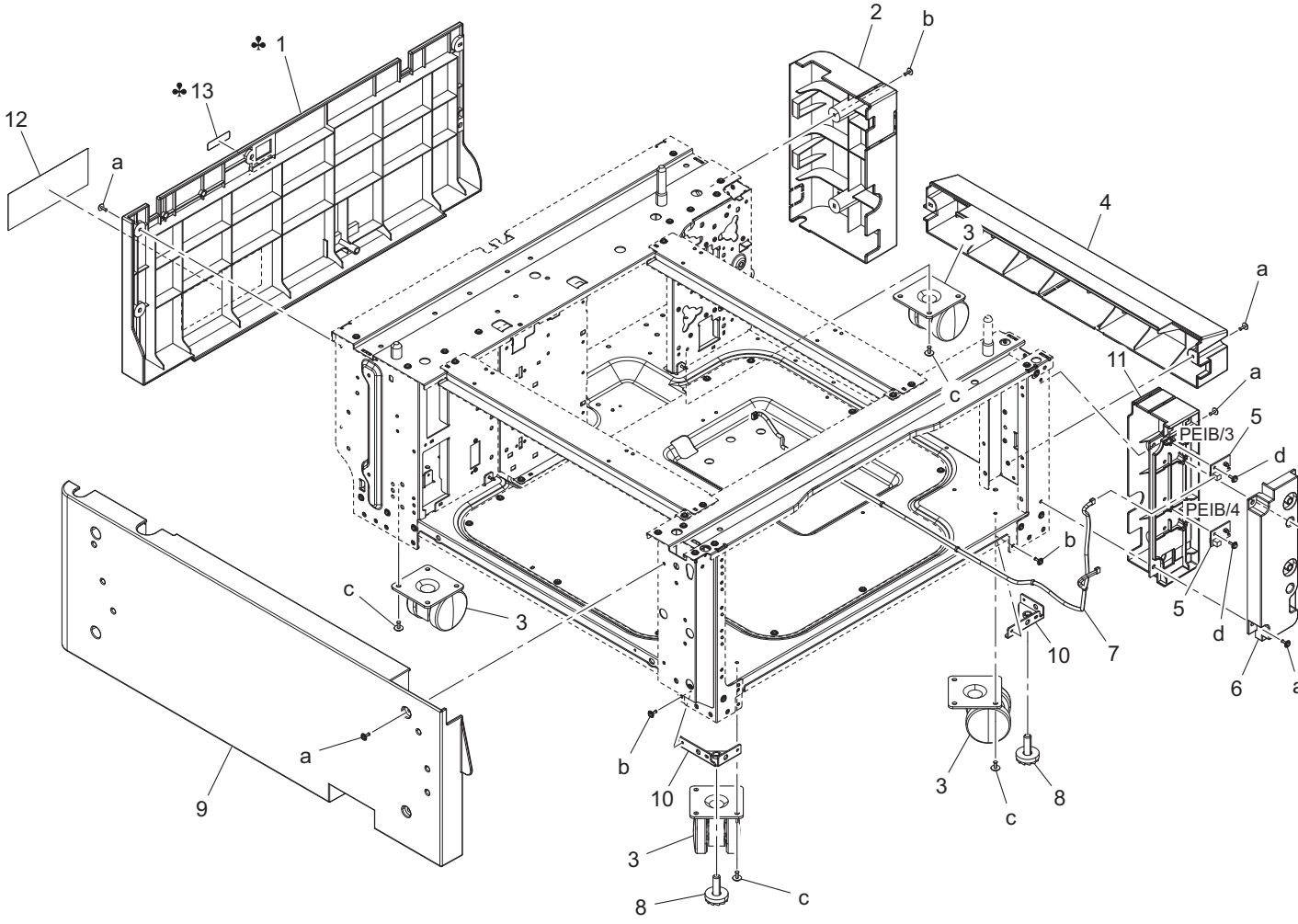

Page	Key	Parts No.	Description	Service Manual	Destinations	Class	Quantity
1	1	A2XM570200	Cover /Rear		A,A1	C	1
1	1	A2XM570801	Cover /Rear		B,C,D1,D3,E,F2,G1,G2,H,I,J,K	C	1
1	2	A2XM570301	Cover /Right rear			C	1
1	3	4061101000	Castor			C	4
1	4	A2XM570400	Cover /Right			C	1
1	5	A00JH00D00	PWB Assembly LED1	Tray 3 paper empty indicator board (PEIB/3) Tray 4 paper empty indicator board (PEIB/4)		C	2
1	6	A2XM570500	Cover			C	1
1	7	A2XMN10C02	Indicating Wiring /2			D	1
1	8	4348202401	ADJUSTING PLATE			D	2
1	9	A2XM570100	Cover /Left			C	1
1	10	A2XM561000	Mounting Plate			D	2
1	11	A2XM570600	Cover /Right front			C	1
1	12	A2XM942300	Label			C	1
1	13	A093940800	Label		A,A1	C	1
1	a	V137030804	screw			V	
1	b	V137030803	screw			V	
1	c	V137040803	SCREW			V	
1	d	V153030803	Screw			V	
1	e	V153030804	screw			V	

12.2 FRAME SECTION

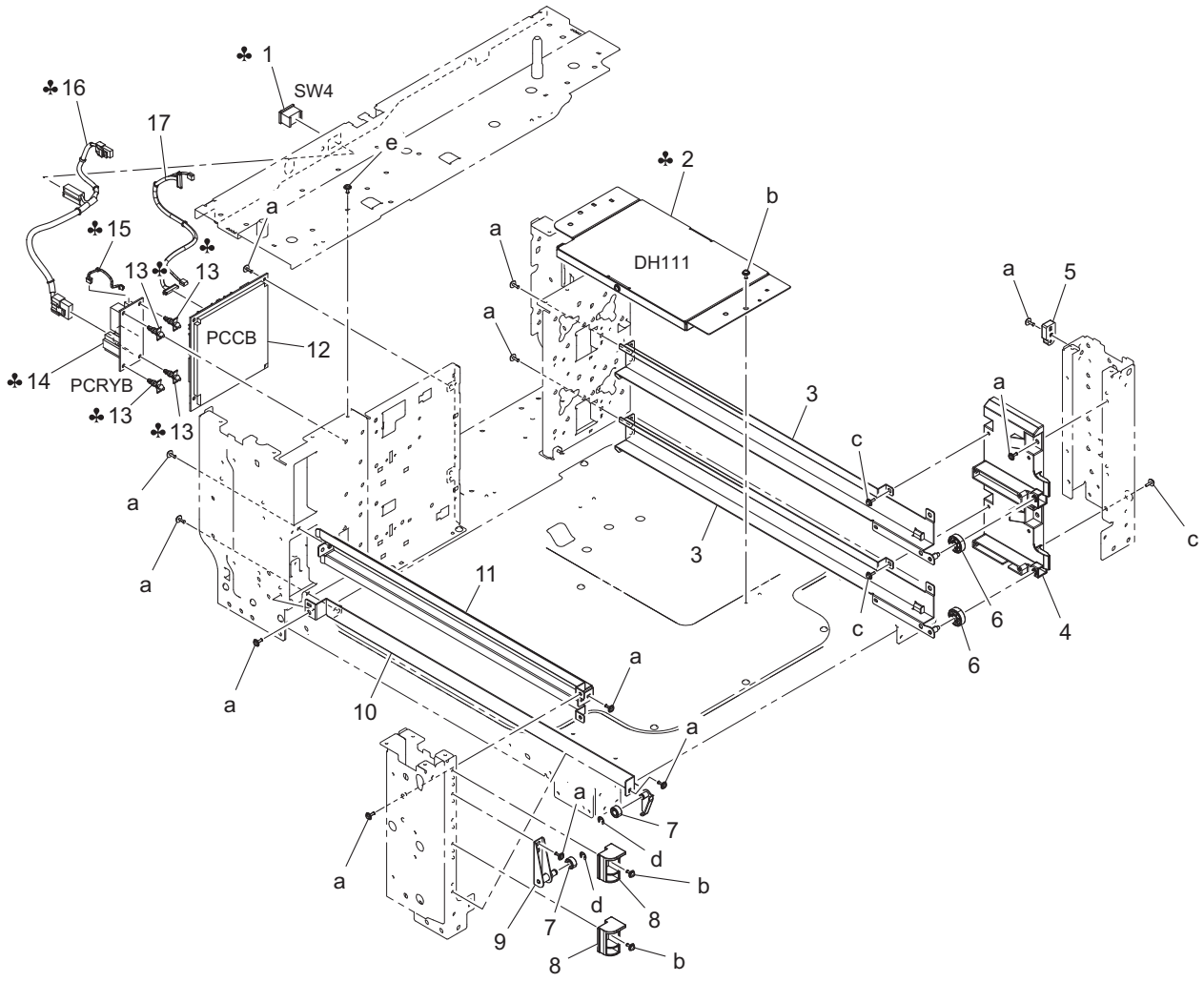

Page	Key	Parts No.	Description	Service Manual	Destinations	Class	Quantity
2	1	A093M60000	Rocker switch		A,A1	C	1
2	2	A2XMR70000	Heater Assy	PC dehumidifier heater (DH111)	A,A1	D	1
2	3	A2XM561801	Rail			D	2
2	4	A2XM562001	Holder			D	1
2	5	A2XM562100	Holder			D	1
2	6	A161103901	Roll			D	2
2	7	A161623400	Roll			D	2
2	8	A2XM562601	Stopper			D	2
2	9	A2XM561501	Mounting Plate			D	1
2	10	A2XM561700	Rail			D	1
2	11	A2XM561600	Rail			D	1
2	12	A2XMH00201	PWB Assembly(PWB-CB_2 ASSY)	PC control board (PCCB)		I	1
2	13	V502010033	spacer		A,A1	D	4
2	14	A093H00100	PWB Assy		A,A1	C	1
2	15	A2XMN10E00	Heater Wiring		A,A1	D	1
2	16	A2XMN10001	Heater Relay harness		A,A1	D	1
2	17	A2XMN10101	Main body Relay harness			C	1
2	a	V137030803	screw			V	
2	b	V116030803	Screw			V	
2	c	V153030803	Screw			V	
2	d	V217040001	E Ring			V	
2	e	V144030803	SCREW			V	

12.3 PAPER FEED DRIVE SECTION

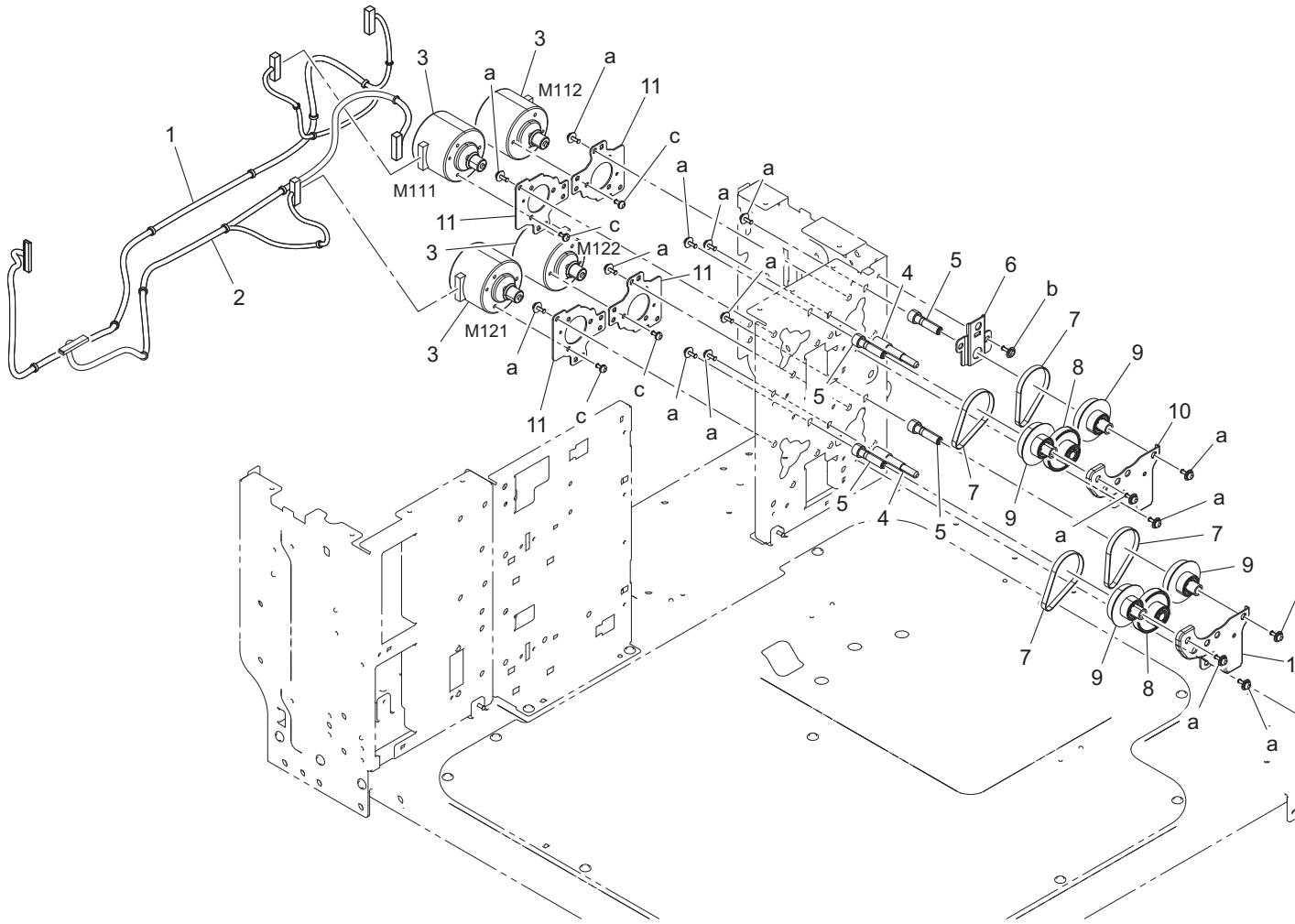

Page	Key	Parts No.	Description	Service Manual	Destinations	Class	Quantity
3	1	A2XMN10H00	Drive Wiring /1			D	1
3	2	A2XMN10J00	Drive Wiring /2			D	1
3	3	A2XMM10000	Brushless motor	Tray 3 paper feed motor (M111) Tray 3 vertical transport motor (M112) Tray 4 paper feed motor (M121) Tray 4 vertical transport motor (M122)		C	4
3	4	A2XM591600	Shaft			C	2
3	5	A2XM591500	Shaft			C	4
3	6	A2XM590900	Mounting Plate			D	1
3	7	A2XM592700	Belt			C	4
3	8	A2XM592200	Gear			C	2
3	9	A2XM592100	Pulley			C	4
3	10	A2XM590500	Mounting Plate			D	2
3	11	A2XM590300	Mounting Plate			D	4
3	a	V116030803	Screw			V	
3	b	V137030803	screw			V	
3	c	V115030603	Screw			V	

12.4 CASSETTE SIZE SECTION

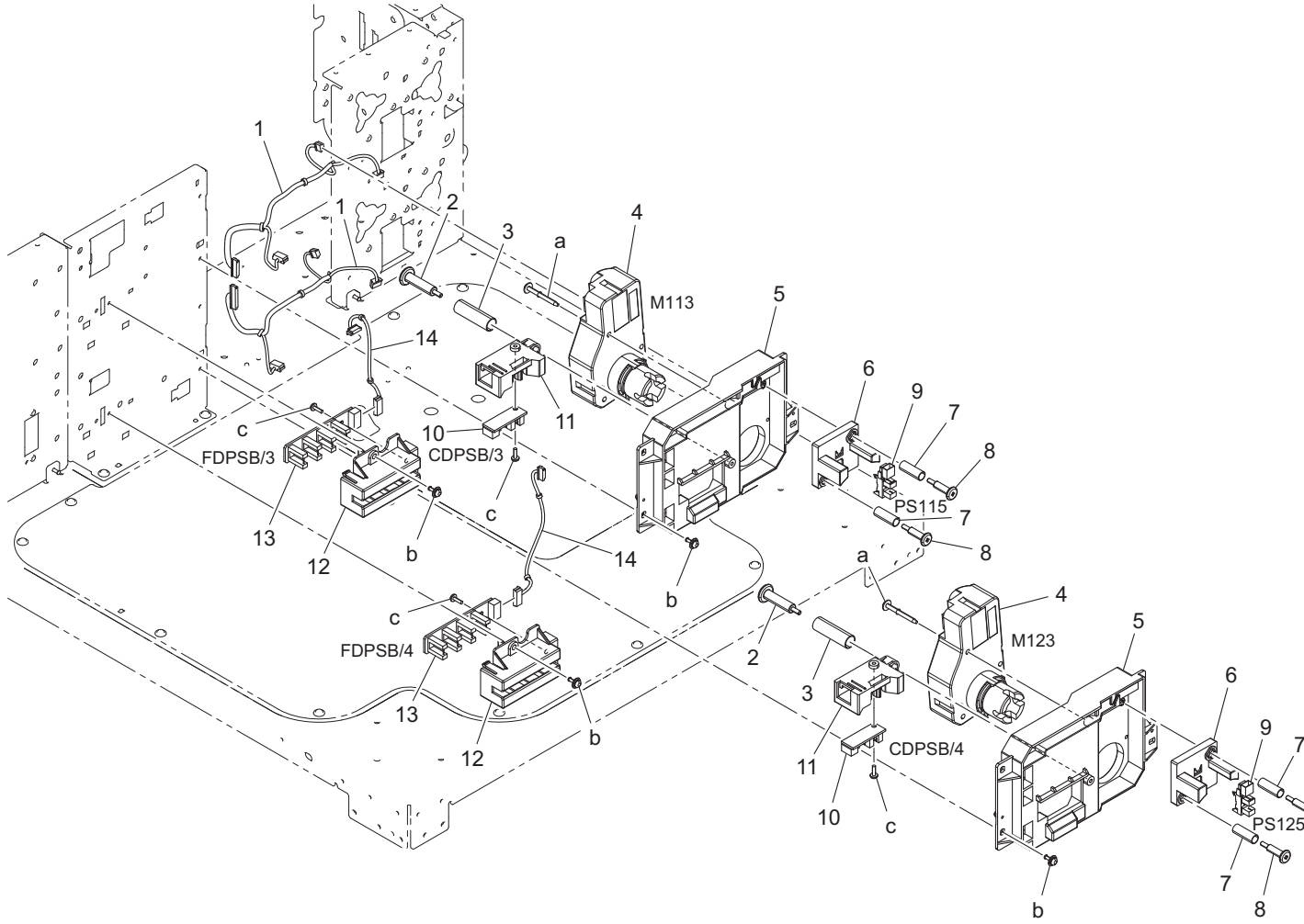

Page	Key	Parts No.	Description	Service Manual	Destinations	Class	Quantity
4	1	A2XMN10D00	Paperfeed Wiring /1			D	2
4	2	A161627801	Shoulder screw			C	2
4	3	4002311002	Pressure Spring			C	2
4	4	9J06M10300	MOTOR			B	2
4	5	A161627102	Holder			D	2
4	6	A161627300	Holder			D	2
4	7	A0ED627600	Compressing Coil spring			D	4
4	8	A161627701	Shoulder screw			C	4
4	9	A108M50100	Photointerrupter	Tray 3 lift-up motor (M113) Tray3 paper near empty sensor (PS115) Tray 4 lift-up motor (M123) Tray 4 paper near empty sensor (PS125)		B	2
4	10	A161M50501	Photointerrupter	Tray 3 CD paper size board (CDPSB/3) Tray 4 CD paper size board (CDPSB/4)		C	2
4	11	A161627500	Holder			C	2
4	12	A161628000	Holder			C	2
4	13	A161M50600	Photointerrupter	Tray 3 FD paper size board (FDPSB/3) Tray 4 FD paper size board (FDPSB/4)		C	2
4	14	A2XMN10F00	Paperfeed Wiring /2			D	2
4	a	V153033003	screw			V	
4	b	V116030803	Screw			V	

4	c	V145030803	screw			V	

12.5 PAPER TRANSPORT SECTION

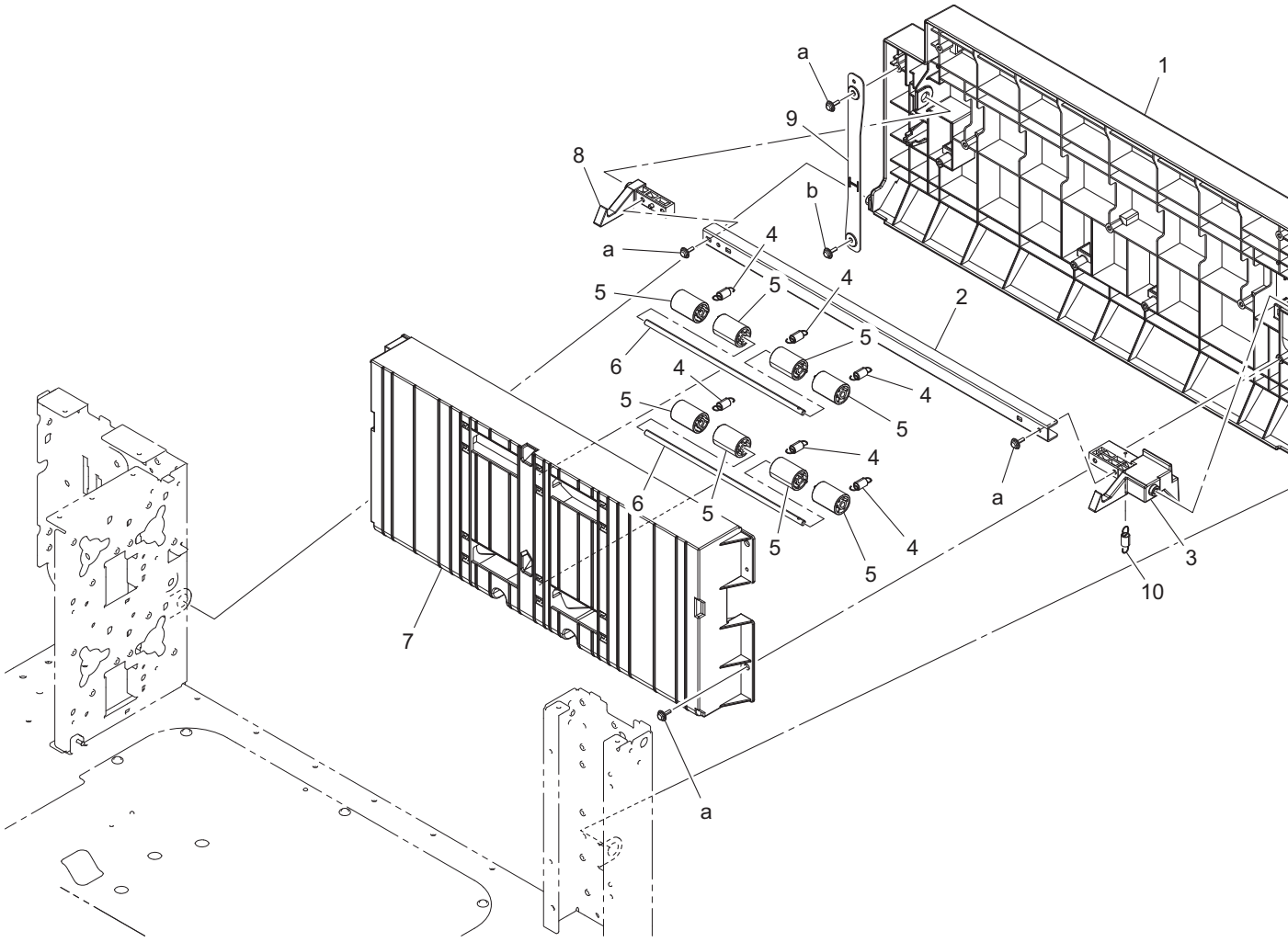

Page	Key	Parts No.	Description	Service Manual	Destinations	Class	Quantity
5	1	A2XM563101	Door			C	1
5	2	A2XM563400	Connecting Plate			D	1
5	3	A2XM563900	Lock			C	1
5	4	A161815500	Pulling Spring			C	6
5	5	A161815400	Roll			C	8
5	6	A161815300	Shaft			D	2
5	7	A2XM563501	Guide			C	1
5	8	4348305301	PAWL			C	1
5	9	A2XM563600	Band			C	1
5	10	A2XM564000	Pulling Coil spring			C	1
5	a	V153030803	Screw			V	
5	b	V116030803	Screw			V	

12.6 PAPER TAKE-UP SECTION

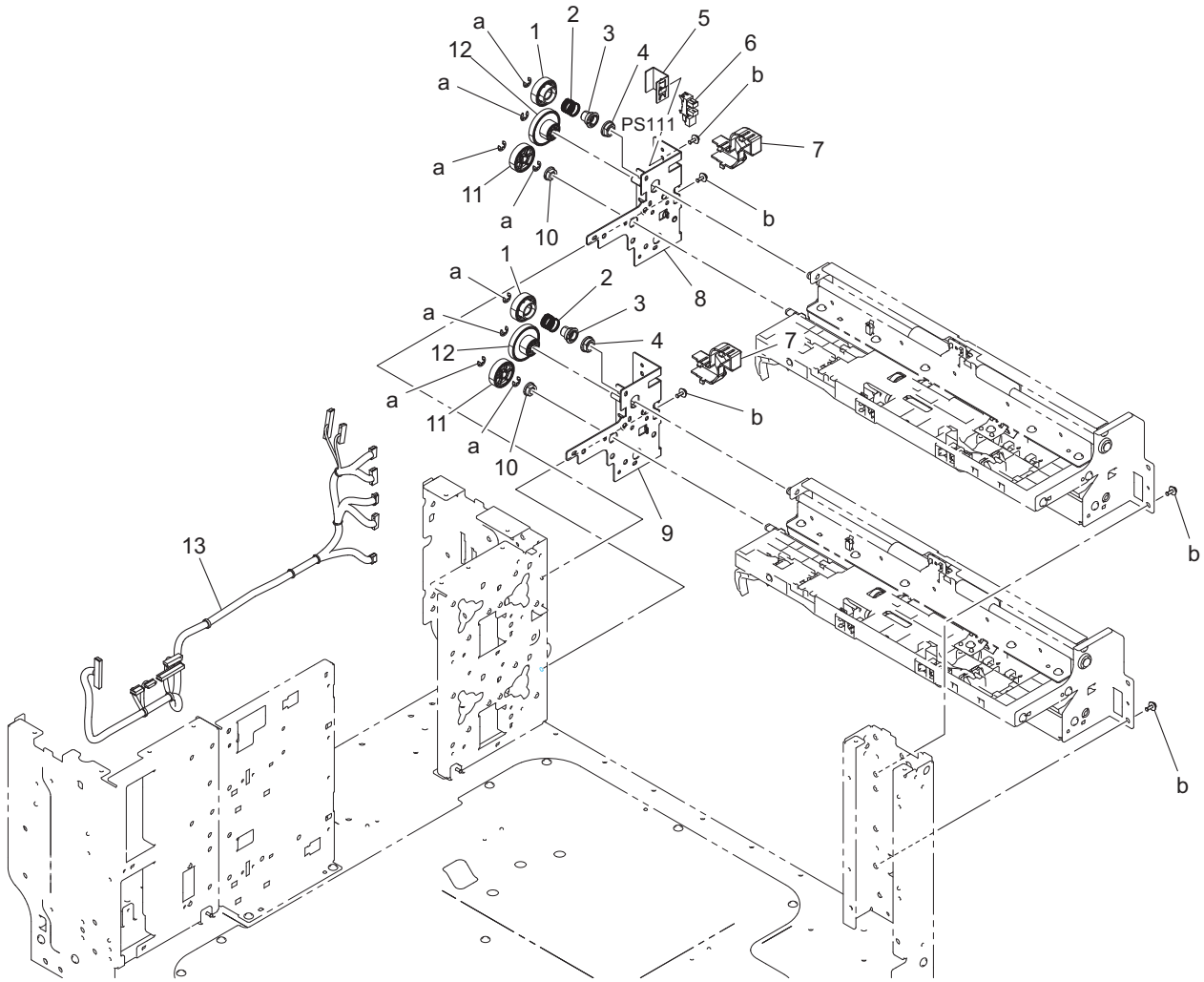

Page	Key	Parts No.	Description	Service Manual	Destinations	Class	Quantity
6	1	A2XM592400	Gear			C	2
6	2	A2XM592602	Spring			C	2
6	3	A2XM592500	Guide			C	2
6	4	4131353202	BUSHING			C	2
6	5	A2XM590800	Mounting Plate			D	1
6	6	A108M50100	Photointerrupter	Right bottom door sensor (PS111)		B	1
6	7	A2XM593500	Cover			D	2
6	8	A2XMG56100	FRAME ASSY			D	1
6	9	A2XMG56200	FRAME ASSY			D	1
6	10	4131300301	BUSHING			C	2
6	11	A2XM592300	Gear			C	2
6	12	A2XM592200	Gear			C	2
6	13	A2XMN10400	Paperfeed Relay harness / 3			D	1
6	a	V217040001	E Ring			V	
6	b	V116030803	Screw			V	

2 unit a machine

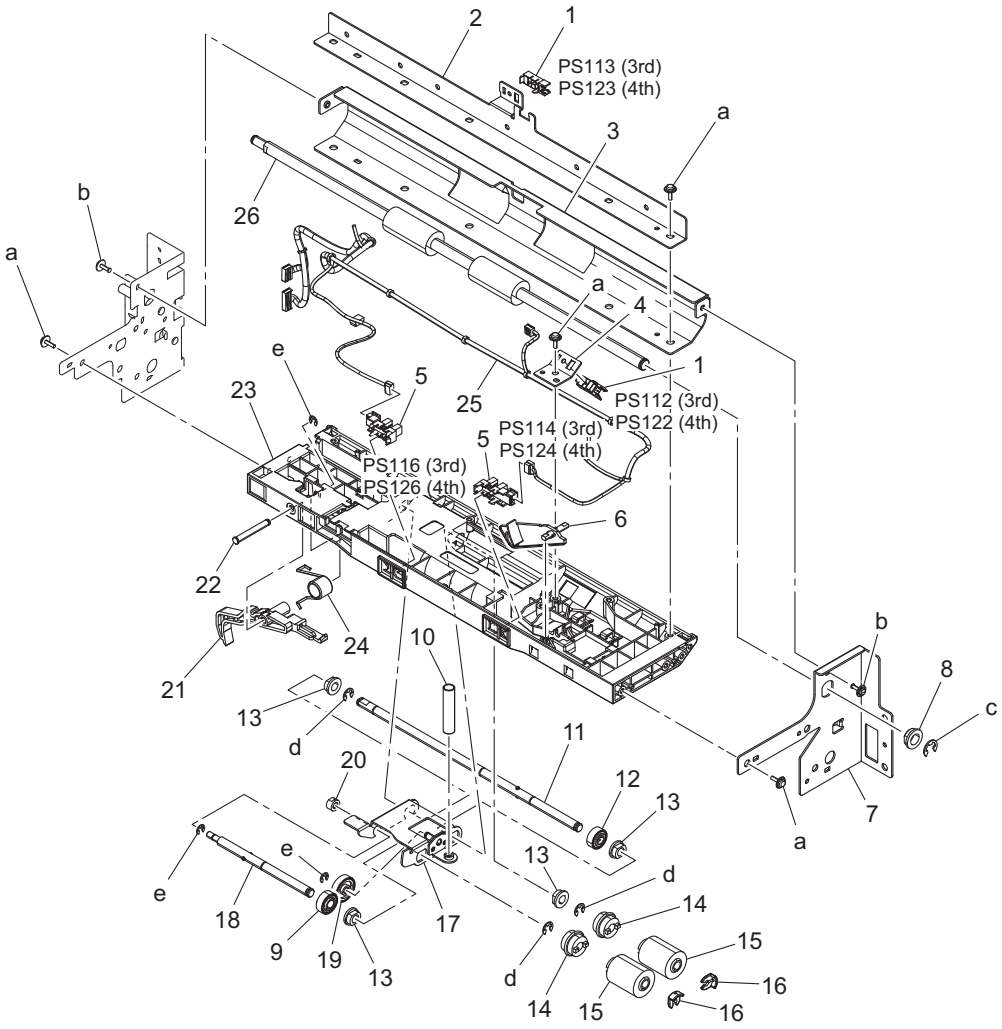

Page	Key	Parts No.	Description	Service Manual	Destinations	Class	Quantity
7	1	A0EDM50100	Photoreflector	Tray 3 paper feed sensor (PS112) Tray 3 vertical transport sensor (PS113) Tray 4 paper feed sensor (PS122) Tray 4 vertical transport sensor (PS123)		I	4
7	2	A2XM565900	Reinforce Plate			D	2
7	3	A2XM566000	Guide Plate			C	2
7	4	A161560900	Mounting Plate			D	2
7	5	A108M50100	Photointerrupter	Tray 3 paper empty sensor (PS114) Tray 3 upper limit sensor (PS116) Tray 4 paper empty sensor (PS124) Tray 4 upper limit sensor (PS126)		B	4
7	6	A161561600	Actuator			C	2
7	7	A2XM565800	Frame			D	2
7	8	4131353202	BUSHING			C	2
7	9	A161562600	Gear 28T			C	2
7	10	A161562800	Compressing Coil spring			C	2
7	11	A2XM565200	Shaft			C	2
7	12	A161562400	Gear 26T			C	2
7	13	4131300301	BUSHING			C	8
7	14	A02E561100	Clutch			C	4
7	15	A00J563600	Roller			A	4
7	16	56AA40490	SHAFT STOPPER 4			C	4
7	17	A161562101	Holder			D	2
7	18	A161562000	Shaft			D	2

7	19	A161562300	Gear 34T			C	2
7	20	A161562500	Bushing			C	2
7	21	A161567300	Lever			C	2
7	22	A02E560800	Shaft			D	2
7	23	A161560300	Paper feed Frame			D	2
7	24	A161567400	Torsion Spring			C	2
7	25	A2XMN10702	Conveyance Detection harness /2			D	2
7	26	A2XM565400	Drive Roller			C	2
7	a	V153030803	Screw			V	
7	b	V137030803	screw			V	
7	c	V217060001	E Ring			V	
7	d	V217040001	E Ring			V	
7	e	V217030001	E Ring			V	

2 unit a machine

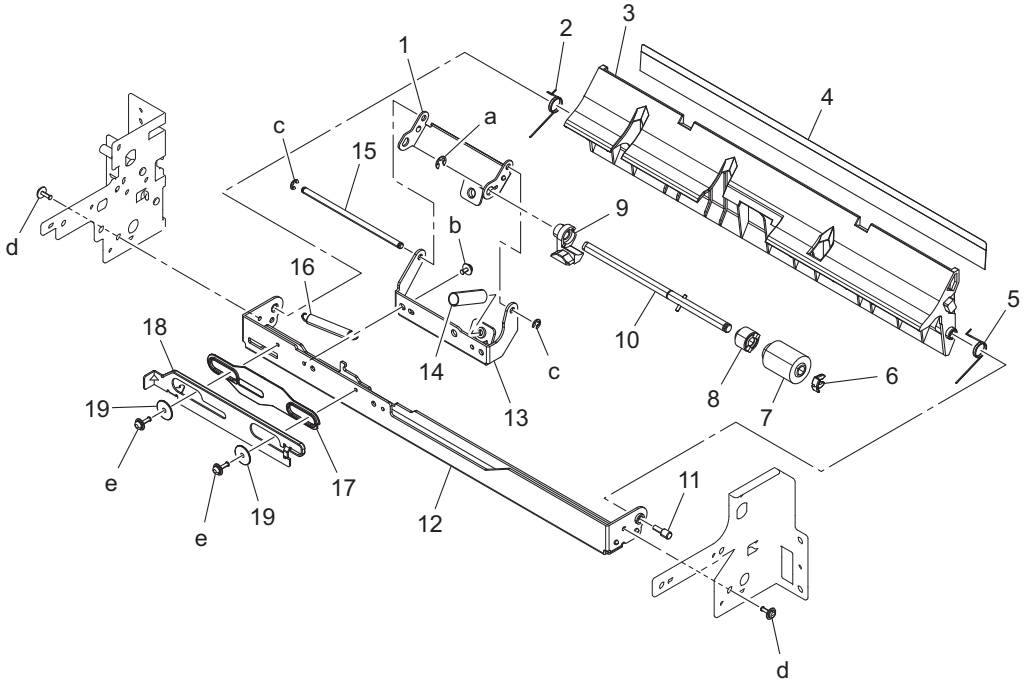

Page	Key	Parts No.	Description	Service Manual	Destinations	Class	Quantity
8	1	A2XM567400	Holder			C	2
8	2	A161568800	Torsion Coil spring			C	2
8	3	A2XM566101	Guide Plate			C	2
8	4	A2XM566200	Guide			C	2
8	5	A161568700	Torsion Coil spring			C	2
8	6	56AA40490	SHAFT STOPPER 4			C	2
8	7	A00J563600	Roller			A	2
8	8	A0ED563900	Torque limiter			C	2
8	9	A161563501	Guide			D	2
8	10	A161563400	Shaft			D	2
8	11	4532341001	SHOULDER SCREW			D	2

8	12	A2XM566702	Mounting Plate			D	2
8	13	A2XM566902	Mounting Plate			D	2
8	14	4030301703	PRESSURE SPRING			C	2
8	15	A161563300	Shaft			D	2
8	16	A161564400	Pulling Coil spring			C	2
8	17	A161564200	Spacer			D	2
8	18	A161564100	Lever			D	2
8	19	A161564300	Spacer			D	4
8	a	V217040001	E Ring			V	
8	b	V116030603	Screw			V	
8	c	V217030001	E Ring			V	
8	d	V137030803	screw			V	
8	e	V116031003	Screw			V	

12.7 3rd PAPER TRAY UNIT

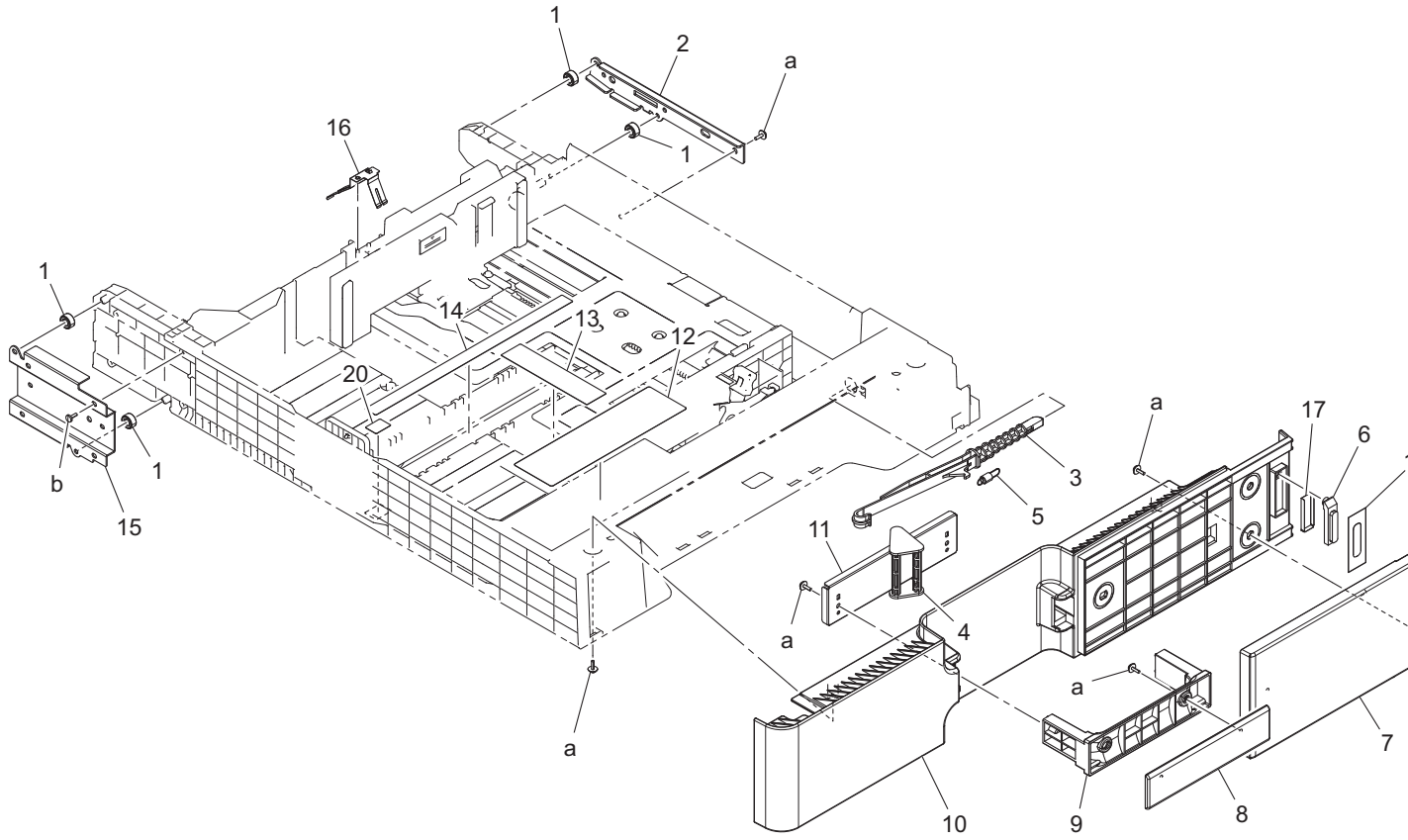

Page	Key	Parts No.	Description	Service Manual	Destinations	Class	Quantity
9	1	A161623400	Roll			D	4
9	2	A161623101	Reinforce Plate /Right			D	1
9	3	A161636502	Lever			C	1
9	4	A161626601	Lever			C	1
9	5	A161626800	Pulling Coil spring			C	1
9	6	A161626000	Lens			D	1
9	7	A2XM568300	Cover			C	1
9	8	A161625900	Cover			C	1
9	9	A161626900	Handle			C	1
9	10	A2XM568102	Cover			C	1

9	11	A2XM569200	Holder			D	1
9	12	A161943801	Label			C	1
9	13	A02E941500	Label Cd			C	1
9	14	A00J942202	Label FD			C	1
9	15	A161623201	Reinforce Plate /Left			D	1
9	16	A161622100	Ground Plate			D	1
9	17	A161626200	Sheet			D	1
9	18	A161626100	Light blocking Sheet			D	1
9	19	A2XM940100	Label			C	1
9	20	A02E941300	Label Fd			C	1
9	a	V153030803	Screw			V	
9	b	V149030803	screw			V	

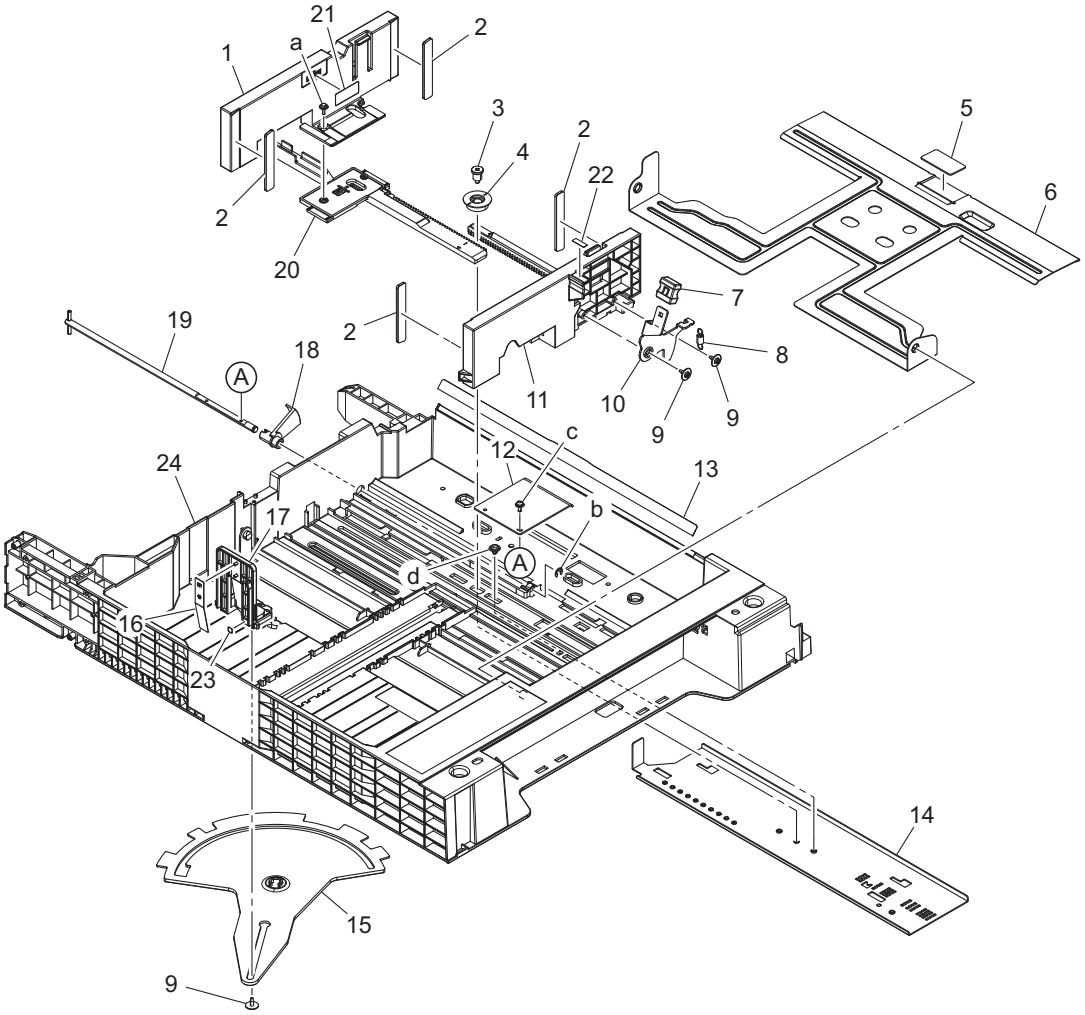

Page	Key	Parts No.	Description	Service Manual	Destinations	Class	Quantity
10	1	A161620903	Regulating Plate /Rear			C	1
10	2	A161624100	Cushion			C	4
10	3	A161620600	Shoulder screw			D	1
10	4	A161620701	Gear			D	1
10	5	4030322601	FRICTION SHEET			C	1
10	6	A161620400	Lifting Plate			D	1
10	7	4037320401	KNOB			C	1
10	8	A0ED621400	Pulling Coil spring			D	1
10	9	4163529301	SCREW			C	3
10	10	A161621300	Lever			D	1
10	11	A161620802	Regulating Plate /Front			C	1
10	12	4030320601	LEVER			D	1
10	13	A0ED620200	Guide			C	1

10	14	A161621900	Mounting Plate			D	1
10	15	A161621400	Lever			C	1
10	16	A161621800	Plate spring			C	1
10	17	A161621701	Regulating Plate			C	1
10	18	A0ED620701	Actuator			C	1
10	19	A161621600	Lifting Shaft			D	1
10	20	A161621100	Rack			C	1
10	21	A161943700	Label Max Level			C	1
10	22	A161943000	Label			C	1
10	23	A02E940300	Label			C	1
10	24	A161620103	Paper feed Cassette			D	1
10	a	V153030803	Screw			V	
10	b	V217040001	E Ring			V	
10	c	V116030803	Screw			V	
10	d	V144040603	SCREW			V	

12.8 4th PAPER TRAY UNIT

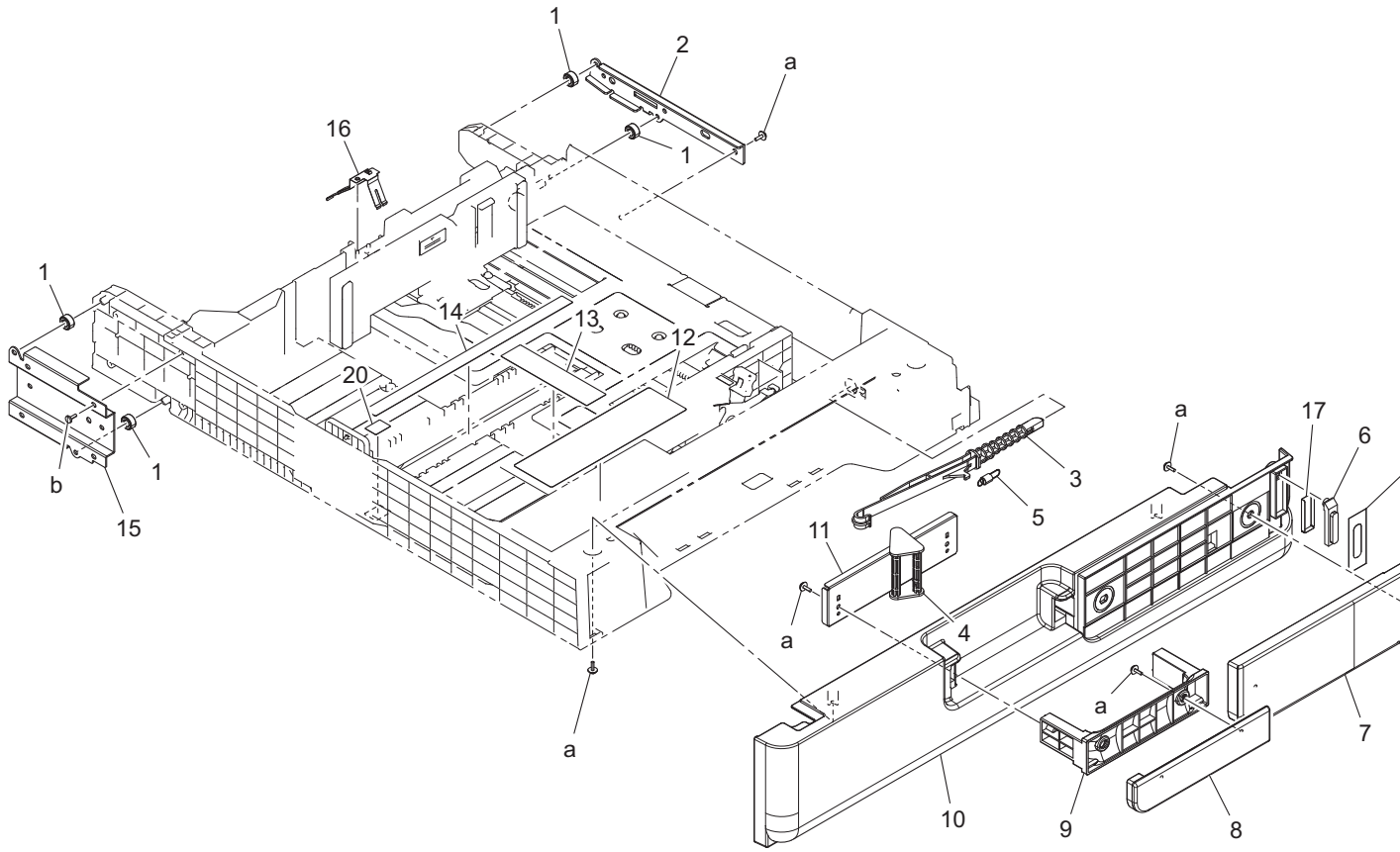

Page	Key	Parts No.	Description	Service Manual	Destinations	Class	Quantity
11	1	A161623400	Roll			D	4
11	2	A161623101	Reinforce Plate /Right			D	1
11	3	A161636502	Lever			C	1
11	4	A161626601	Lever			C	1
11	5	A161626800	Pulling Coil spring			C	1
11	6	A161626000	Lens			D	1
11	7	A2XM568400	Cover			C	1
11	8	A2XM568700	Cover			C	1

11	9	A161626900	Handle			C	1
11	10	A2XM568202	Cover			C	1
11	11	A2XM569200	Holder			D	1
11	12	A161943801	Label			C	1
11	13	A02E941500	Label Cd			C	1
11	14	A00J942202	Label FD			C	1
11	15	A161623201	Reinforce Plate /Left			D	1
11	16	A161622100	Ground Plate			D	1
11	17	A161626200	Sheet			D	1
11	18	A161626100	Light blocking Sheet			D	1
11	19	A2XM940200	Label			C	1
11	20	A02E941300	Label Fd			C	1
11	a	V153030803	Screw			V	
11	b	V149030803	screw			V	

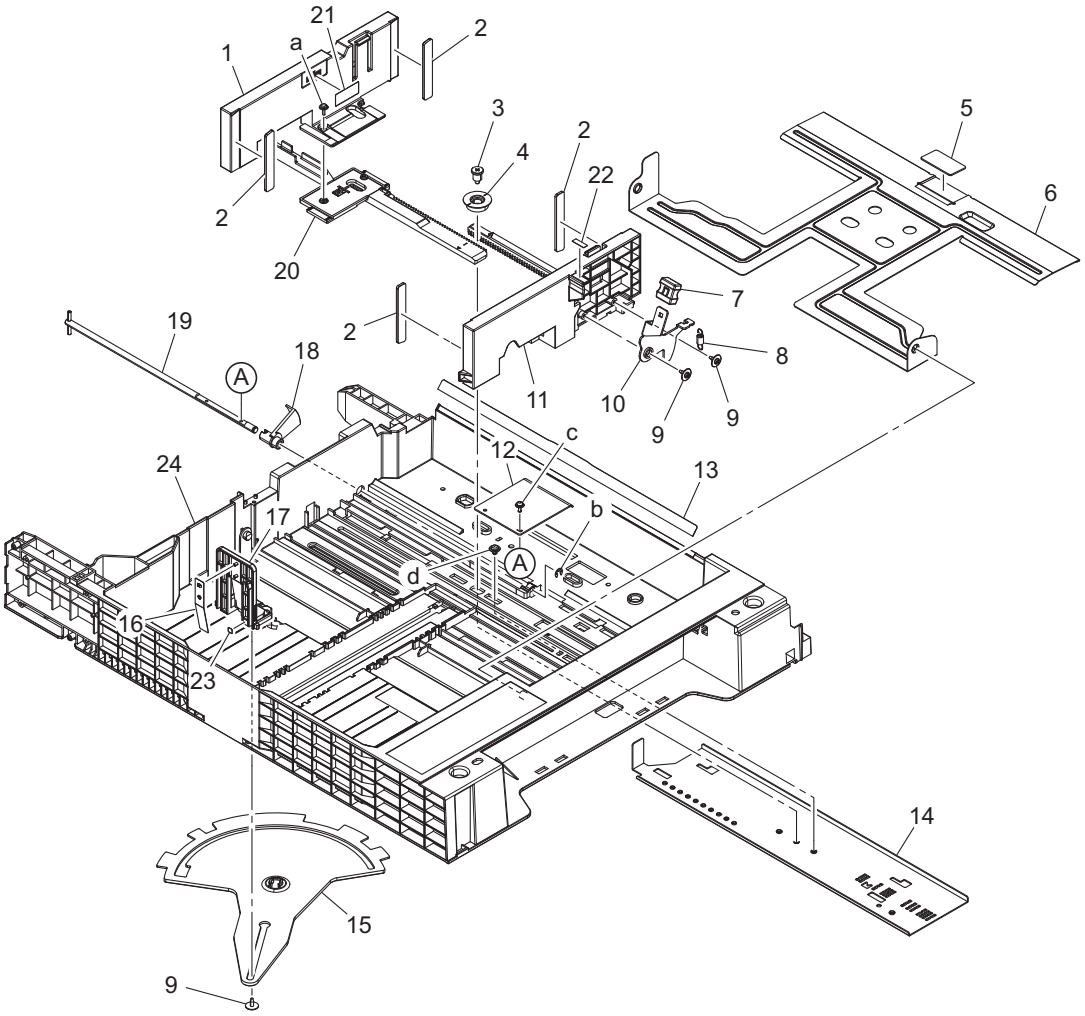

Page	Key	Parts No.	Description	Service Manual	Destinations	Class	Quantity
12	1	A161620903	Regulating Plate /Rear			C	1
12	2	A161624100	Cushion			C	4
12	3	A161620600	Shoulder screw			D	1
12	4	A161620701	Gear			D	1
12	5	4030322601	FRICTION SHEET			C	1
12	6	A161620400	Lifting Plate			D	1
12	7	4037320401	KNOB			C	1
12	8	A0ED621400	Pulling Coil spring			D	1
12	9	4163529301	SCREW			C	3
12	10	A161621300	Lever			D	1
12	11	A161620802	Regulating Plate /Front			C	1

12	12	4030320601	LEVER			D	1
12	13	A0ED620200	Guide			C	1
12	14	A161621900	Mounting Plate			D	1
12	15	A161621400	Lever			C	1
12	16	A161621800	Plate spring			C	1
12	17	A161621701	Regulating Plate			C	1
12	18	A0ED620701	Actuator			C	1
12	19	A161621600	Lifting Shaft			D	1
12	20	A161621100	Rack			C	1
12	21	A161943700	Label Max Level			C	1
12	22	A161943000	Label			C	1
12	23	A02E940300	Label			C	1
12	24	A161620103	Paper feed Cassette			D	1
12	a	V153030803	Screw			V	
12	b	V217040001	E Ring			V	
12	c	V116030803	Screw			V	
12	d	V144040603	SCREW			V	

12.9 WIRING ACCESSORIES AND JIGS

1 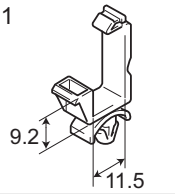	6 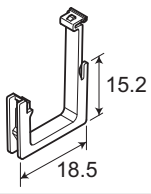						
2 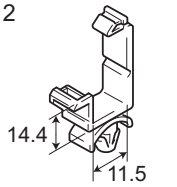							
3 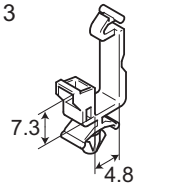							
4 White 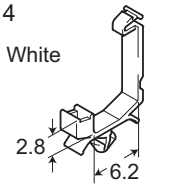							
5 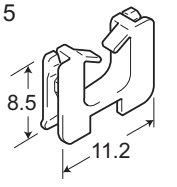							

Page	Key	Parts No.	Description	Service Manual	Destinations	Class	Quantity
13	1	V500010005	saddle			D	
13	2	V500010007	saddle			D	
13	3	V500010020	Saddle			D	
13	4	V500010046	saddle			D	
13	5	V570010021	Saddle			D	

13	6	V570010026	saddle			D	

12.10 ACCESSORY PARTS

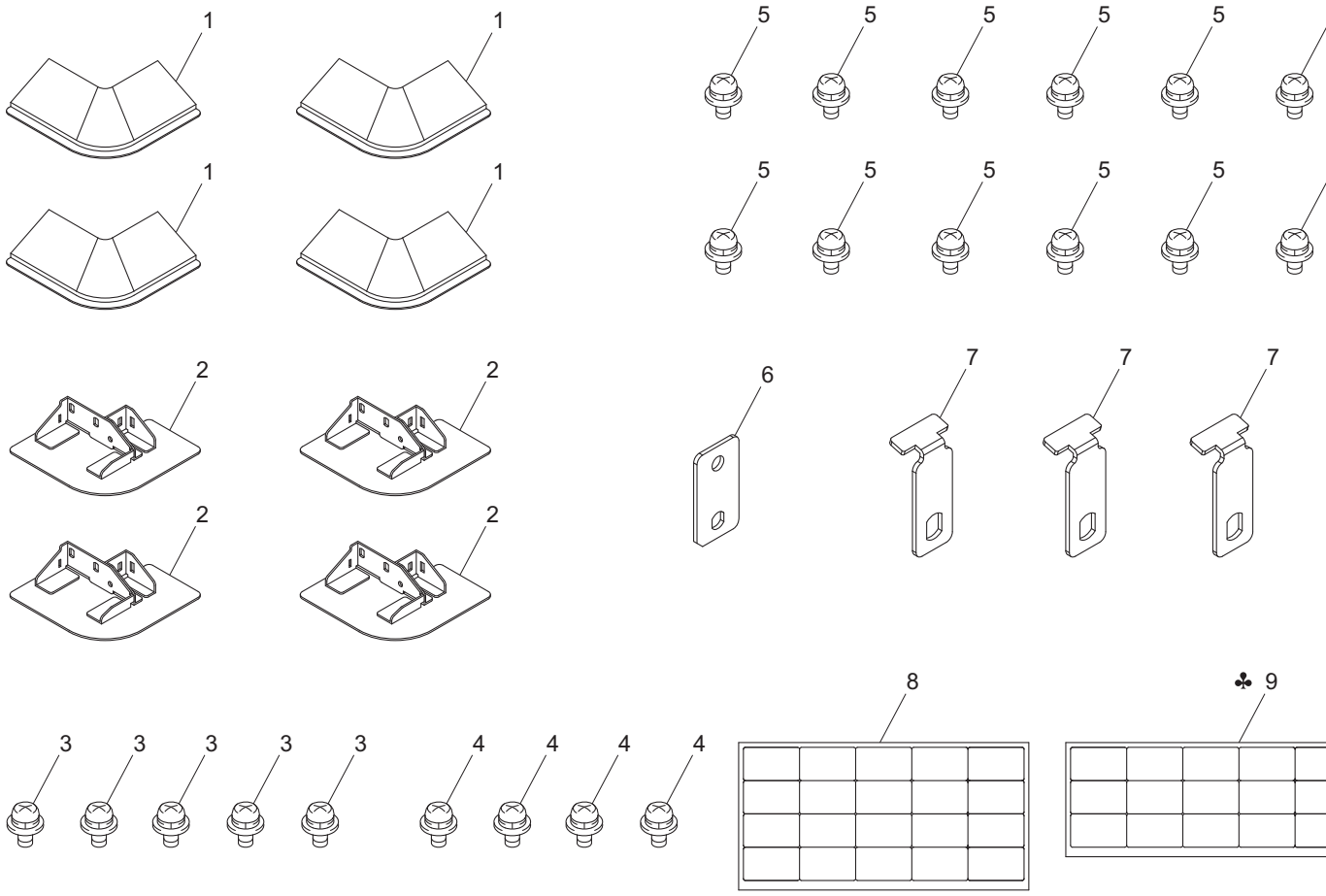

Page	Key	Parts No.	Description	Service Manual	Destinations	Class	Quantity
14	1	4348204301	COVER			C	4
14	2	4348202502	STOP PLATE			C	4
14	3	V116040804	Screw			V	5
14	4	V137040803	SCREW			V	4
14	5	V116040803	Screw			V	12
14	6	A093104001	Stop plate			C	1
14	7	A0XW608300	Connecting Plate			C	3
14	8	A161943300	Label Paper Size/Metric			C	1
14	9	A161943400	Label Paper Size/Inch		B,C,D1,D3,E,F2,G1,G2,H,I,J,K	C	1

12.11 MAINTENANCE LIST

- The items with no Page/Key numbers are not handled as spare parts.

No.	Section	PM Parts Description	Maintenance Cycle (K=1,000)		Parts No.	Destinations	Page/Key	Note
			QTY	Replace				
1	Paper Take-up Section	Pick-up Roller	1	300K	A00J563600		P7-15	*1 *2
2		Feed Roller	1	300K	A00J563600		P7-15	*1 *2
3		Separation Roller Assy	1	300K	A00J563600		P8-7	*1 *2
4		Pick-up Roller	1	300K	A00J563600		P7-15	*1 *2
5		Feed Roller	1	300K	A00J563600		P7-15	*1 *2
6		Separation Roller Assy	1	300K	A00J563600		P8-7	*1 *2

- *1: Actual durable cycle (life counter value)
- *2: Replace those parts at the same time.

12.12 DESTINATION

Destination No.		Destinations		V	Hz	Model No.
A	A1	JAPAN		100	50/60	A2XM-002
	A2	JAPAN				
B		USA, CANADA		120	60	A2XM-XY2
C		EUROPEAN TYPE		220-240	50/60	A2XM-XY2
D	D1	S.E ASIA TYPE	THAILAND,SRI LANKA,SINGAPORE,MALAYSIA,HONGKONG, PAKISTAN,INDIA,BANGLADESH,INDONESIA	220-240	50/60	A2XM-XY2
	D3	OCEAINA TYPE	AUSTRALIA,NEW ZEALAND	220-240	50/60	A2XM-XY2
E		PHILIPPINES		220-240	50/60	A2XM-XY2
F	F1	SAUDI ARABIA				
	F2	SAUDI ARABIA		220-240	50/60	A2XM-XY2
G	G1	C.S AMERICA		220-240	50/60	A2XM-XY2
	G2	C.S AMERICA		120	60	A2XM-XY2
H		TAIWAN		110	60	A2XM-XY2
I		JORDAN, LEBANON, SYRIA, SOUTH AFRICA, IRAQ, IRAN, N.YEMEN, CAMEROON, UAE, BAHRAIN, OMAN, QATAR, KUWAIT, KENYA, TUNISIA, IVORY COAST, MOROCCO		220-240	50/60	A2XM-XY2
J		CHINA		220-240	50/60	A2XM-XY2
K		KOREA		220-240	50/60	A2XM-XY2

13. PAPER FEEDER (PC-410)

13.1 EXTERNAL PARTS

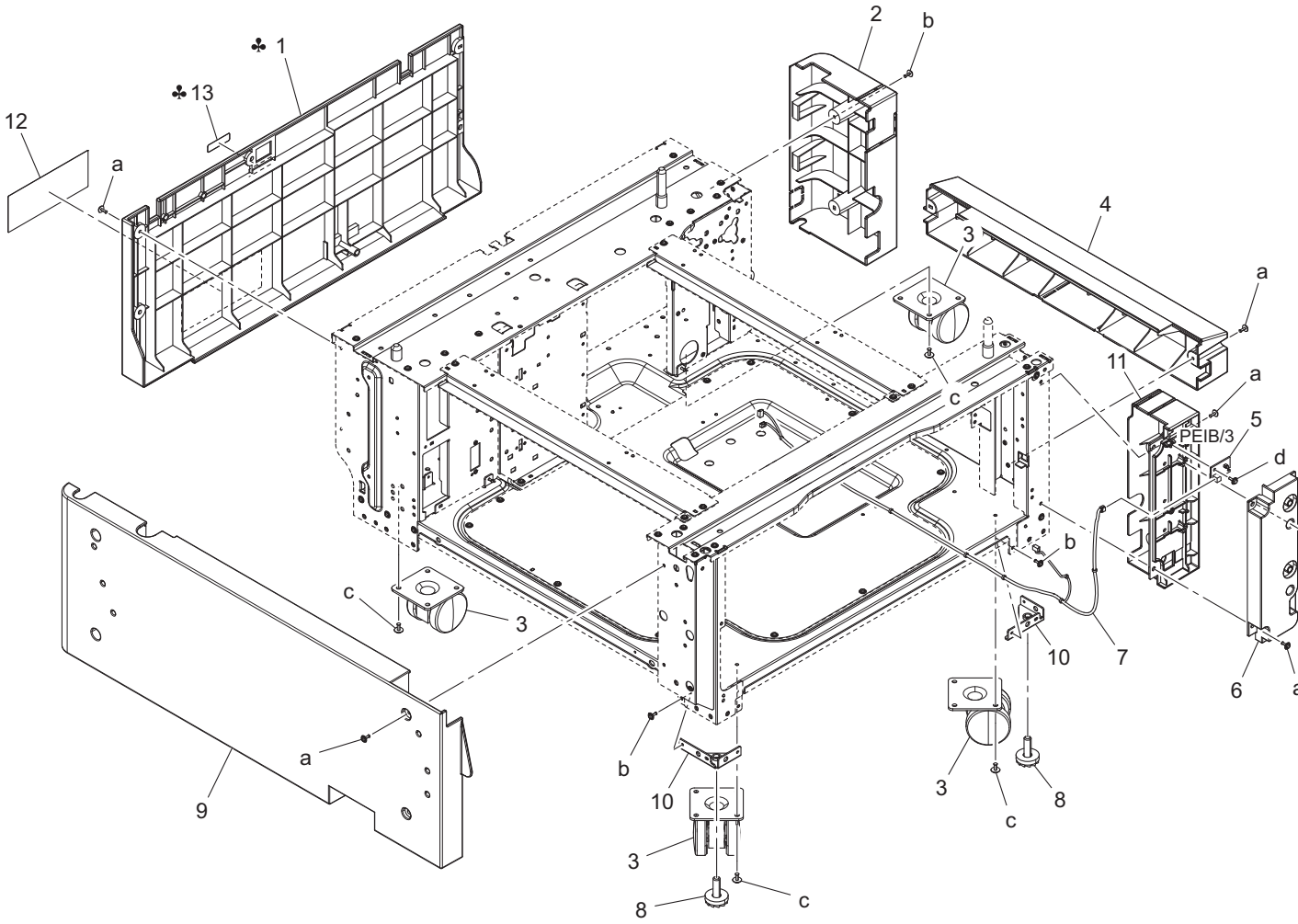

Page	Key	Parts No.	Description	Service Manaul	Destinations	Class	Quantity
1	1	A2XM570200	Cover /Rear		A,A1	C	1
1	1	A2XM570801	Cover /Rear		B,C,D1,D3,E,F2,G1,G2,H,I,J,K	C	1
1	2	A2XM570301	Cover /Right rear			C	1
1	3	4061101000	Castor			C	4
1	4	A2XM570400	Cover /Right			C	1
1	5	A00JH00D00	PWB Assembly LED1	Tray3 paper empty indicator board (PEIB/3)		C	1
1	6	A2XM570500	Cover			C	1
1	7	A2XMN10B02	Indicating Wiring /1			D	1
1	8	4348202401	ADJUSTING PLATE			D	2
1	9	A2XM570100	Cover /Left			C	1
1	10	A2XM561000	Mounting Plate			D	2
1	11	A2XM570600	Cover /Right front			C	1
1	12	A2XM942300	Label			C	1
1	13	A093940800	Label		A,A1	C	1
1	a	V137030804	screw			V	
1	b	V137030803	screw			V	
1	c	V137040803	SCREW			V	
1	d	V153030803	Screw			V	
1	e	V153030804	screw			V	

13.2 FRAME SECTION

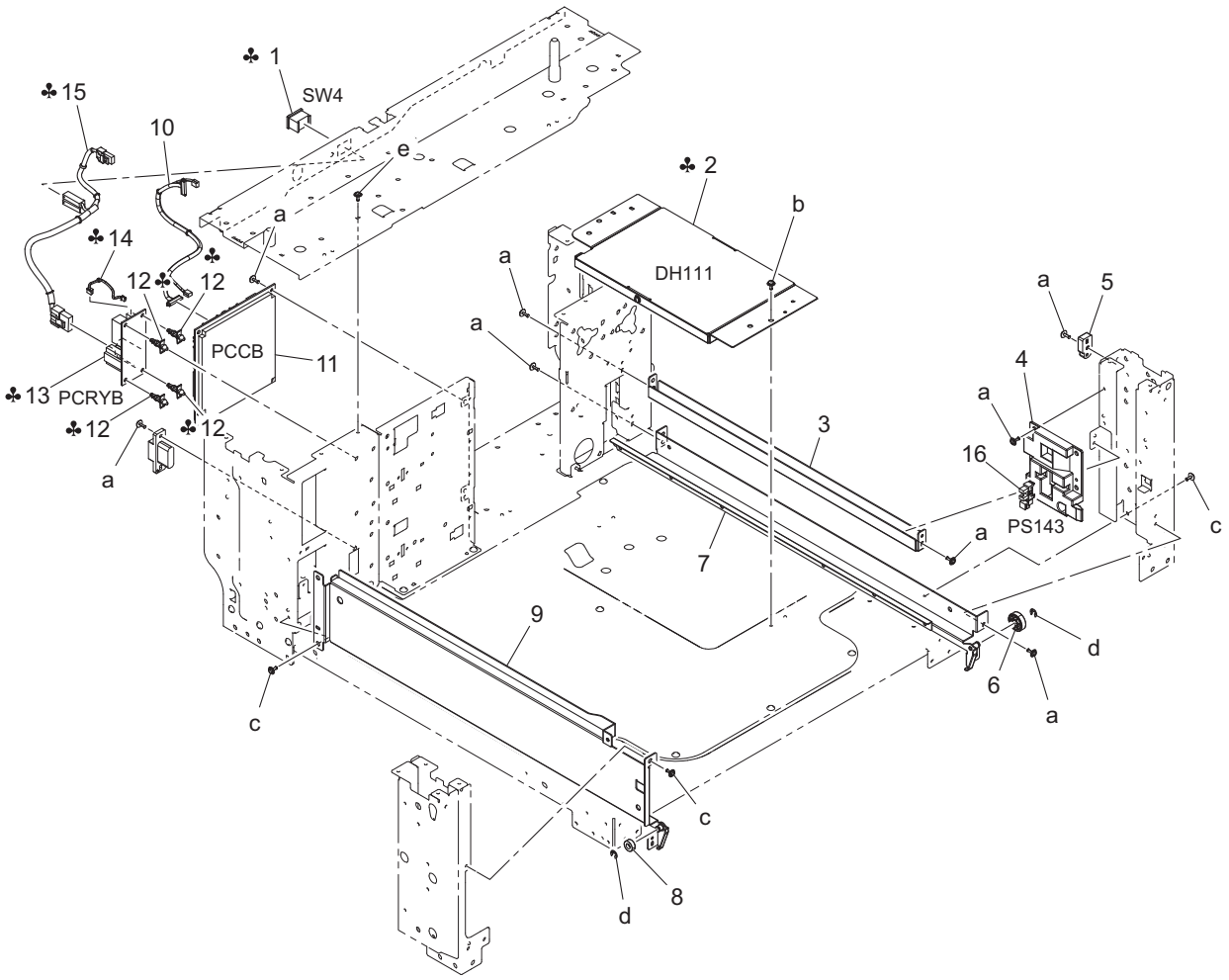

Page	Key	Parts No.	Description	Service Manaul	Destinations	Class	Quantity
2	1	A093M60000	Rocker switch		A,A1	C	1
2	2	A2XMR70000	Heater Assy	PC dehumidifier heater (DH111)	A,A1	D	1
2	3	A2XM562700	Rail			D	1
2	4	A2XM562901	Holder			D	1
2	5	A2XM562100	Holder			D	1
2	6	A161103901	Roll			D	1
2	7	A2XM562802	Rail			D	1
2	8	A0ED623400	Roll			D	1
2	9	A2XM561101	Rail			D	1
2	10	A2XMN10101	Main body Relay harness			C	1
2	11	A2XMH00301	PWB Assembly(PWB-CB_L ASSY)			I	1
2	12	V502010033	spacer		A,A1	D	4
2	13	A093H00100	PWB Assy		A,A1	C	1
2	14	A2XMN10E00	Heater Wiring		A,A1	D	1
2	15	A2XMN10001	Heater Relay harness		A,A1	D	1
2	16	A108M50100	Photointerrupter	Cassette set sensor (PS143)		B	1
2	a	V137030803	screw			V	
2	b	V116030803	Screw			V	
2	c	V144030803	SCREW			V	
2	d	V217040001	E Ring			V	
2	e	V144030803	SCREW			V	

13.3 PAPER FEED DRIVE SECTION

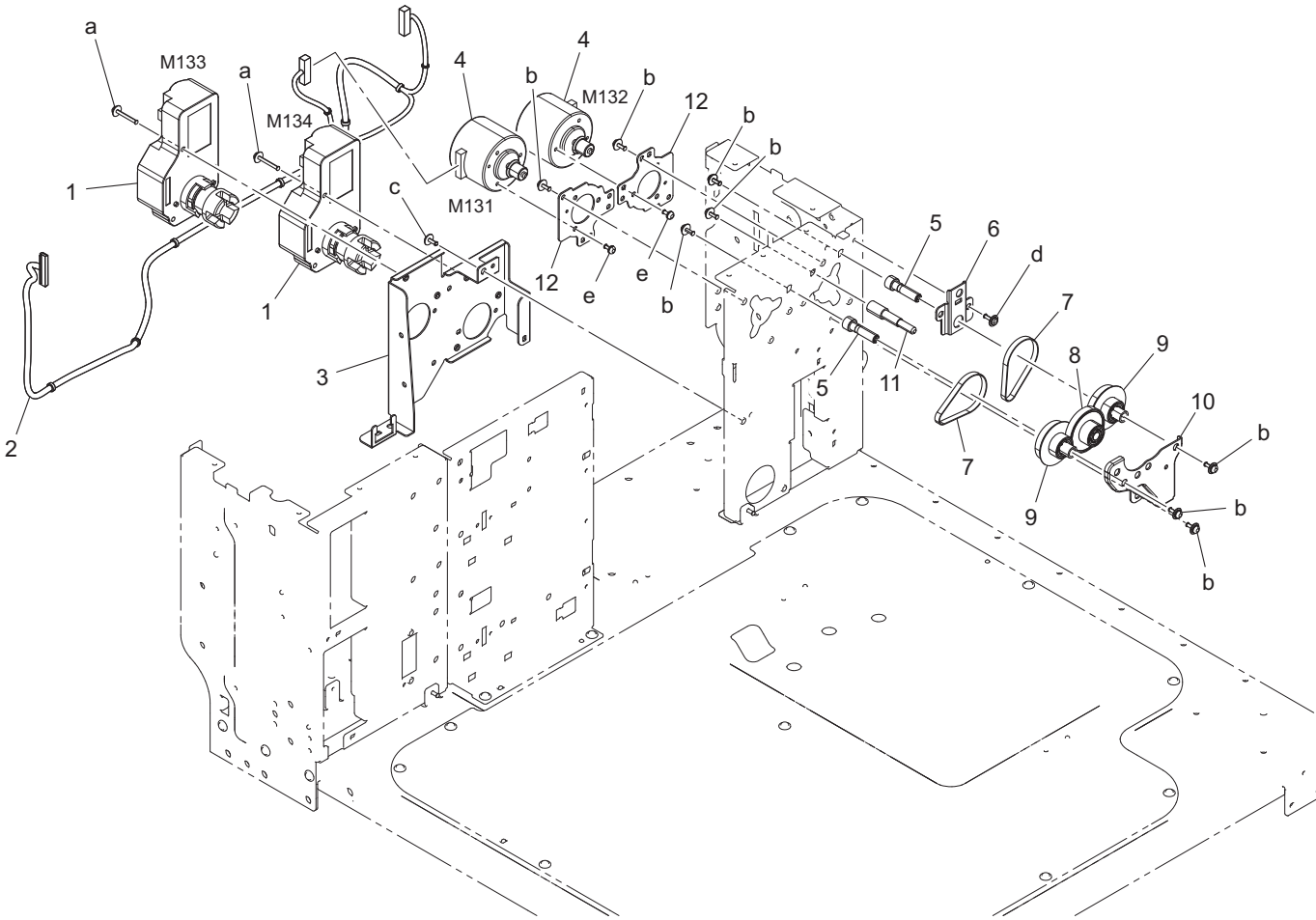

Page	Key	Parts No.	Description	Service Manaul	Destinations	Class	Quantity
3	1	A2XMM10100	brush Motor	Shifter motor (M133) Elevator motor (M134)		C	2
3	2	A2XMN10H00	Drive Wiring /1			D	1
3	3	A2XM595400	Mounting Plate			D	1
3	4	A2XMM10000	Brushless motor	Paper feed motor (M131) Vertical transport motor (M132)		C	2
3	5	A2XM591500	Shaft			C	2
3	6	A2XM590900	Mounting Plate			D	1
3	7	A2XM592700	Belt			C	2
3	8	A2XM592200	Gear			C	1
3	9	A2XM592100	Pulley			C	2
3	10	A2XM590500	Mounting Plate			D	1
3	11	A2XM591600	Shaft			C	1
3	12	A2XM590300	Mounting Plate			D	2
3	a	V116032003	Screw			V	
3	b	V116030803	Screw			V	
3	c	V144030803	SCREW			V	
3	d	V137030803	screw			V	
3	e	V115030603	Screw			V	

13.4 PAPER TRANSPORT SECTION

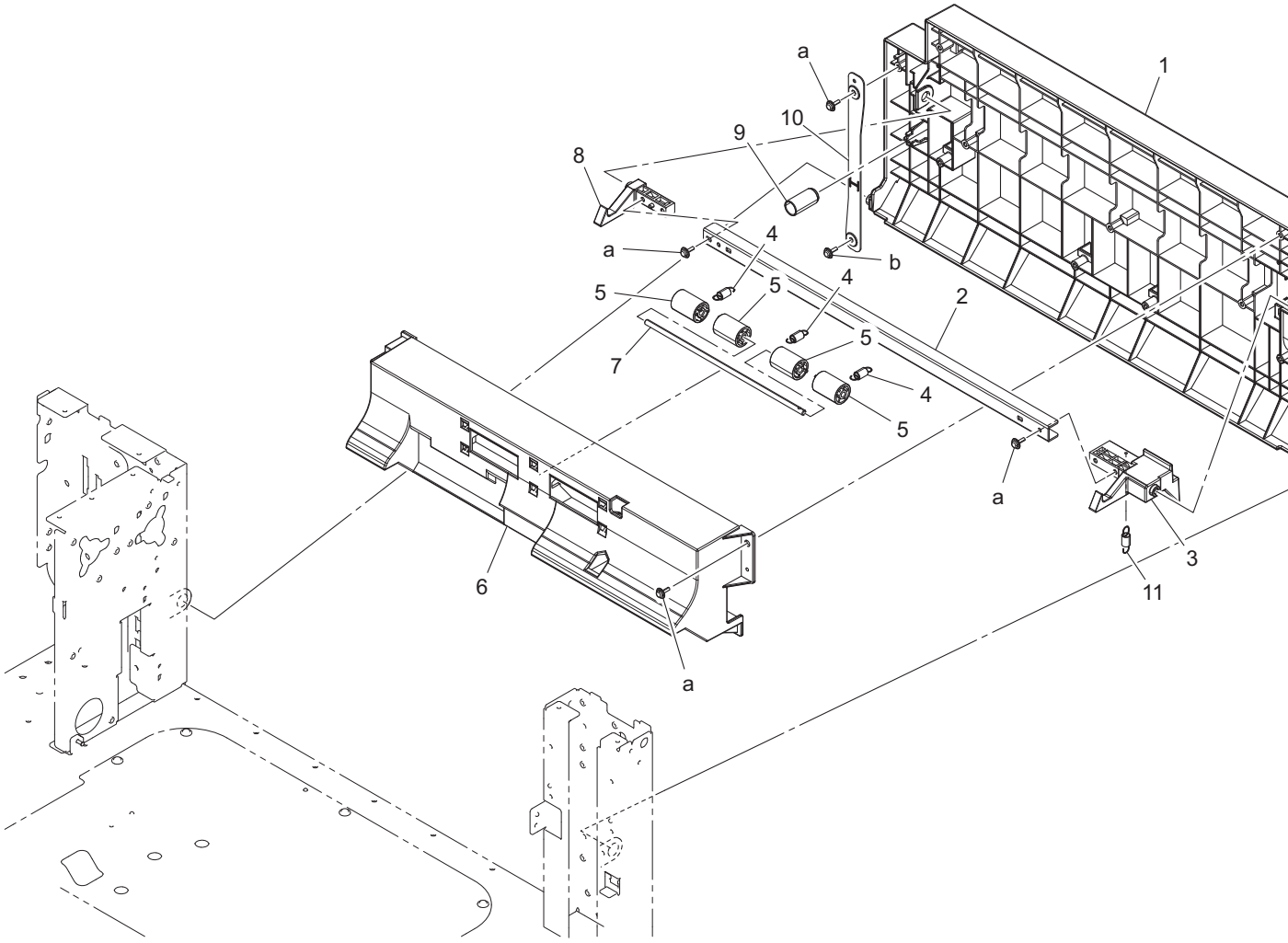

Page	Key	Parts No.	Description	Service Manaul	Destinations	Class	Quantity
4	1	A2XM563101	Door			C	1
4	2	A2XM563400	Connecting Plate			D	1
4	3	A2XM563900	Lock			C	1
4	4	A161815500	Pulling Spring			C	3
4	5	A161815400	Roll			C	4
4	6	A2XM563701	Guide			C	1
4	7	A161815300	Shaft			D	1
4	8	4348305301	PAWL			C	1
4	9	A0XW616000	Compressing Coil spring			C	1
4	10	A2XM563600	Band			C	1
4	11	A2XM564000	Pulling Coil spring			C	1
4	a	V153030803	Screw			V	
4	b	V116030803	Screw			V	

13.5 PAPER TAKE-UP SECTION

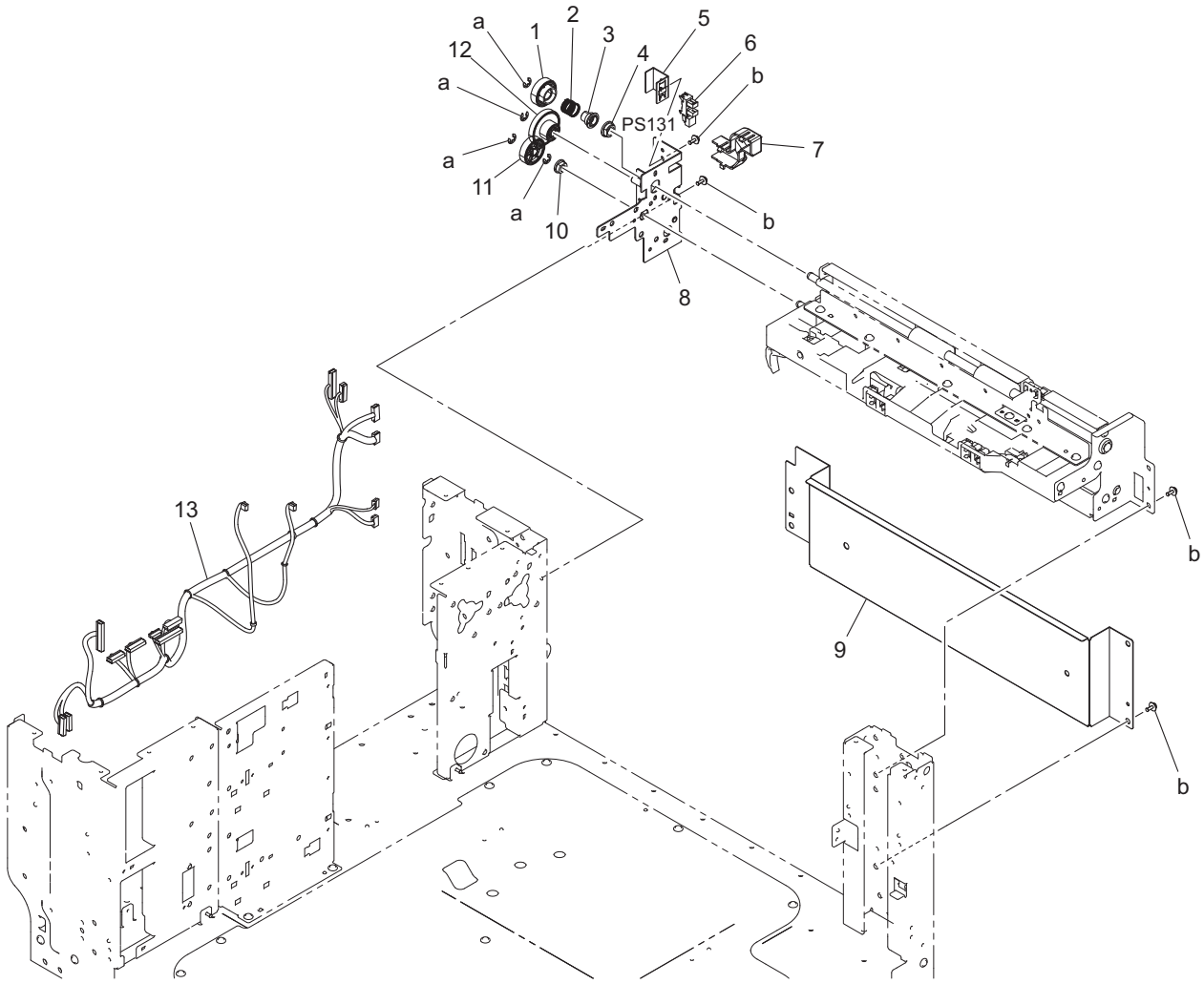

Page	Key	Parts No.	Description	Service Manaul	Destinations	Class	Quantity
5	1	A2XM592400	Gear			C	1
5	2	A2XM592602	Spring			C	1
5	3	A2XM592500	Guide			C	1
5	4	4131353202	BUSHING			C	1
5	5	A2XM590800	Mounting Plate			D	1
5	6	A108M50100	Photointerrupter	Right bottom door sensor (PS131)		B	1
5	7	A2XM593500	Cover			D	1
5	8	A2XMG57100	LCT FRAME ASSY			D	1
5	9	A2XM561301	Cover			D	1
5	10	4131300301	BUSHING			C	1
5	11	A2XM592300	Gear			C	1
5	12	A2XM592200	Gear			C	1
5	13	A2XMN10200	Paperfeed Relay harness / 1			D	1
5	a	V217040001	E Ring			V	
5	b	V116030803	Screw			V	

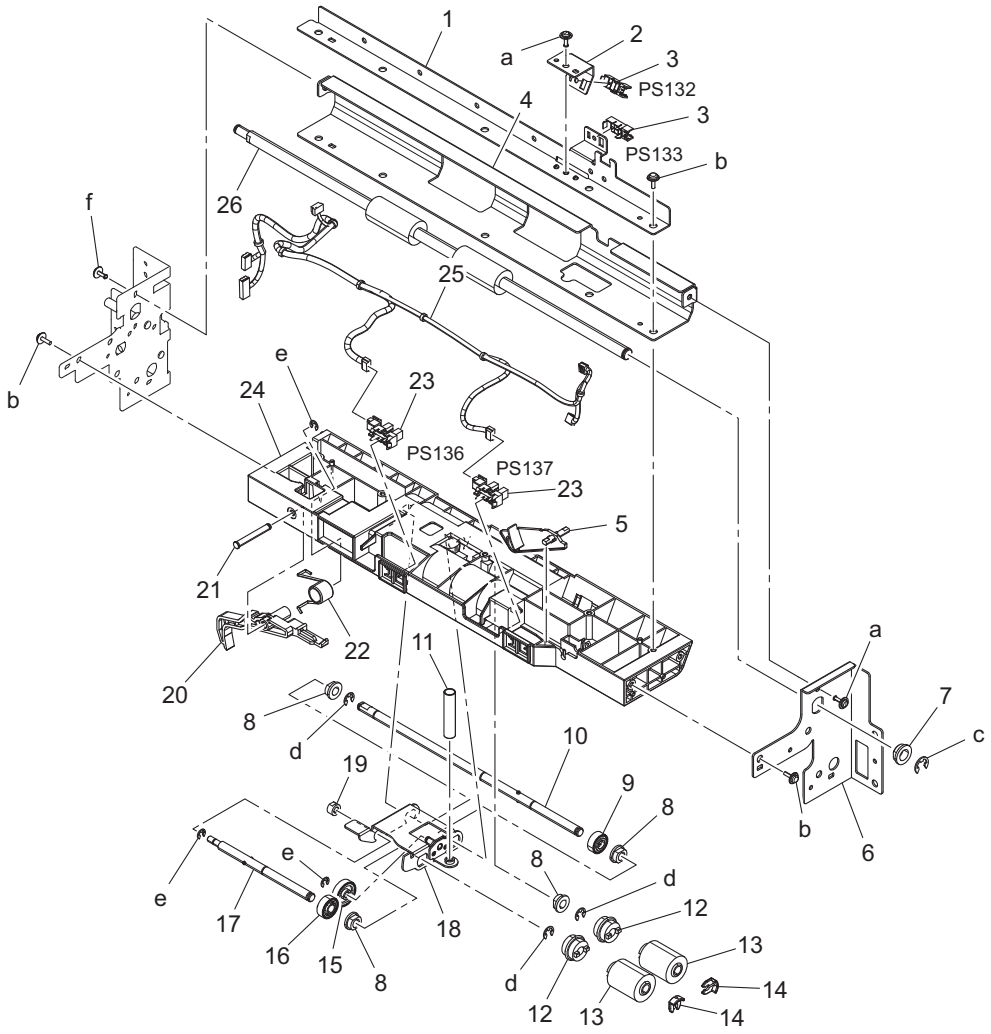

Page	Key	Parts No.	Description	Service Manaul	Destinations	Class	Quantity
6	1	A2XM566500	Reinforce Plate			D	1
6	2	A2XM565600	Mounting Plate			D	1
6	3	A0EDM50100	Photoreflector	Paper feed sensor (PS132) Vertical transport sensor (PS133)		I	2
6	4	A2XM565700	Conveyance Guide			C	1
6	5	A161561600	Actuator			C	1
6	6	A2XM566401	Frame			D	1
6	7	4131353202	BUSHING			C	1
6	8	4131300301	BUSHING			C	4
6	9	A161562400	Gear 26T			C	1
6	10	A2XM565200	Shaft			C	1
6	11	A161562800	Compressing Coil spring			C	1
6	12	A02E561100	Clutch			C	2
6	13	A00J563600	Roller			A	2
6	14	56AA40490	SHAFT STOPPER 4			C	2
6	15	A161562300	Gear 34T			C	1
6	16	A161562600	Gear 28T			C	1
6	17	A161562000	Shaft			D	1
6	18	A161562101	Holder			D	1
6	19	A161562500	Bushing			C	1
6	20	A161567300	Lever			C	1
6	21	A02E560800	Shaft			D	1
6	22	A161567400	Torsion Spring			C	1
6	23	A108M50100	Photointerrupter	Main tray upper limit sensor (PS136)		B	2

				Main tray upper paper empty sensor (PS137)			
6	24	A2XM565100	Frame			D	1
6	25	A2XMN10600	Conveyance Detection harness /1			D	1
6	26	A2XM565400	Drive Roller			C	1
6	a	V137030803	screw			V	
6	b	V153030803	Screw			V	
6	c	V217060001	E Ring			V	
6	d	V217040001	E Ring			V	
6	e	V217030001	E Ring			V	
6	f	V144030803	SCREW			V	

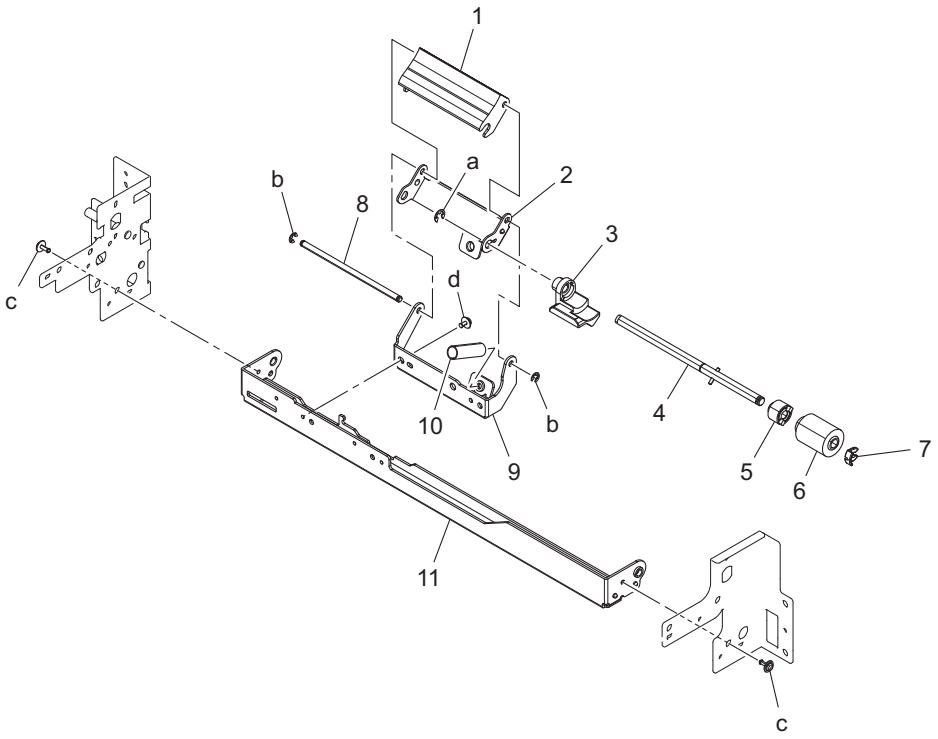

Page	Key	Parts No.	Description	Service Manaul	Destinations	Class	Quantity
7	1	A2XM565300	Guide			D	1
7	2	A2XM567400	Holder			C	1
7	3	A2XM567500	Guide			D	1
7	4	A161563400	Shaft			D	1
7	5	A0ED563900	Torque limiter			C	1
7	6	A00J563600	Roller			A	1
7	7	56AA40490	SHAFT STOPPER 4			C	1
7	8	A161563300	Shaft			D	1
7	9	A2XM566902	Mounting Plate			D	1
7	10	4030301703	PRESSURE SPRING			C	1
7	11	A2XM566702	Mounting Plate			D	1
7	a	V217040001	E Ring			V	
7	b	V217030001	E Ring			V	
7	c	V144030803	SCREW			V	

7	d	V116030603	Screw			V	

13.6 PAPER TRAY UNIT

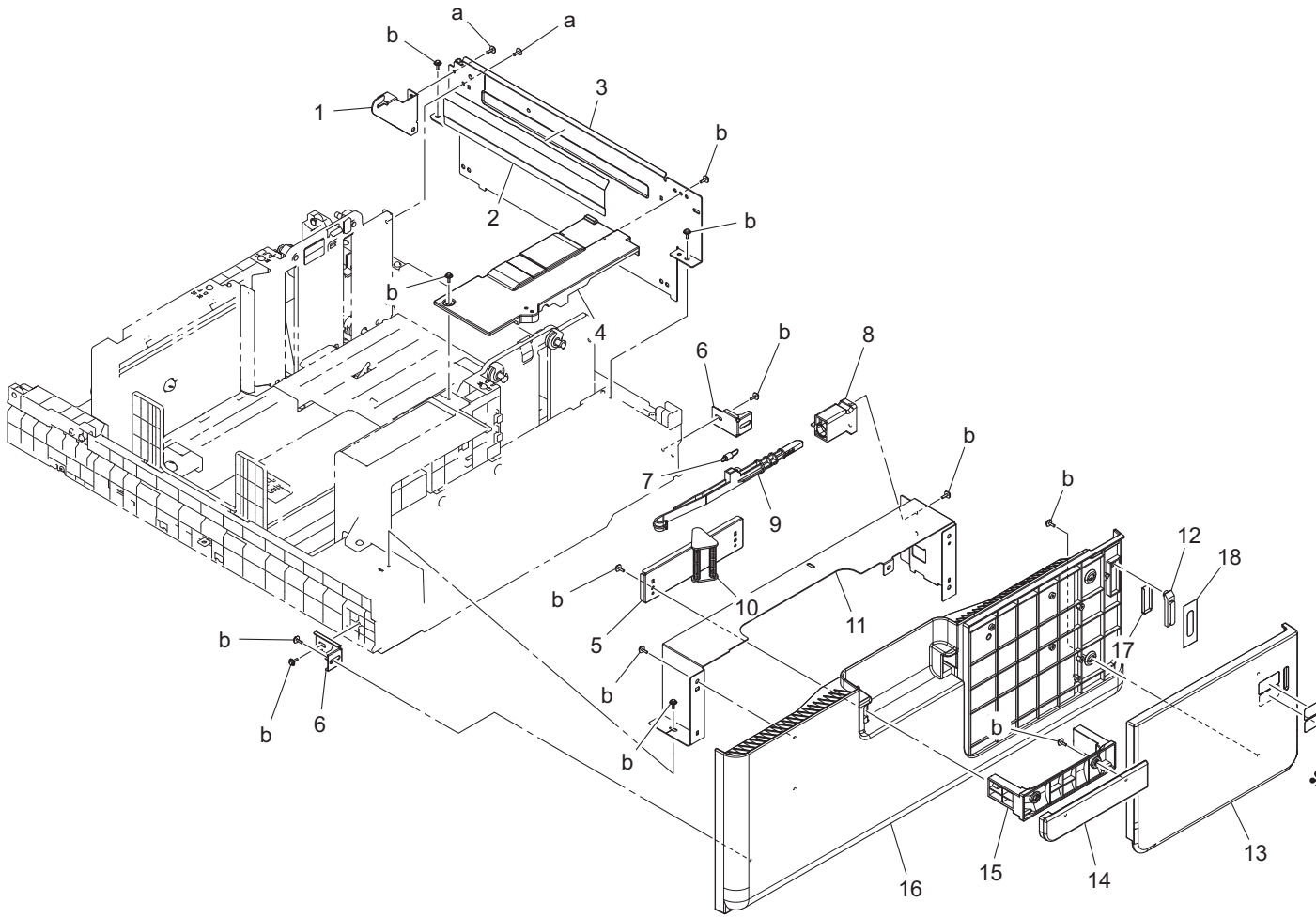

Page	Key	Parts No.	Description	Service Manaul	Destinations	Class	Quantity
8	1	A2XM621201	Reinforce Plate			D	1
8	2	A2XM621100	Guide			D	1
8	3	A2XM620301	Regulating Plate			D	1
8	4	A2XM626601	Cover			D	1
8	5	A2XM569200	Holder			D	1
8	6	A2XM626900	Mounting Plate			D	2
8	7	A161626800	Pulling Coil spring			C	1
8	8	A2XM626500	Mounting Part			D	1
8	9	A2XM626200	Lock Lever			C	1
8	10	A161626601	Lever			C	1
8	11	A2XM626702	Cover			D	1
8	12	A161626000	Lens			D	1
8	13	A2XM626800	Cover			C	1
8	14	A2XM568700	Cover			C	1
8	15	A161626900	Handle			C	1
8	16	A2XM626102	Cover			C	1
8	17	A161626200	Sheet			D	1
8	18	A161626100	Light blocking Sheet			D	1
8	19	A2XM940100	Label			C	1
8	20	A2XM940400	Label		A,A1,C,D1,D3,E,F2,G1,G2,H,I,J,K	C	1
8	20	A2XM940300	Label		B	C	1

8	a	V137030803	screw			V	
8	b	V153030803	Screw			V	

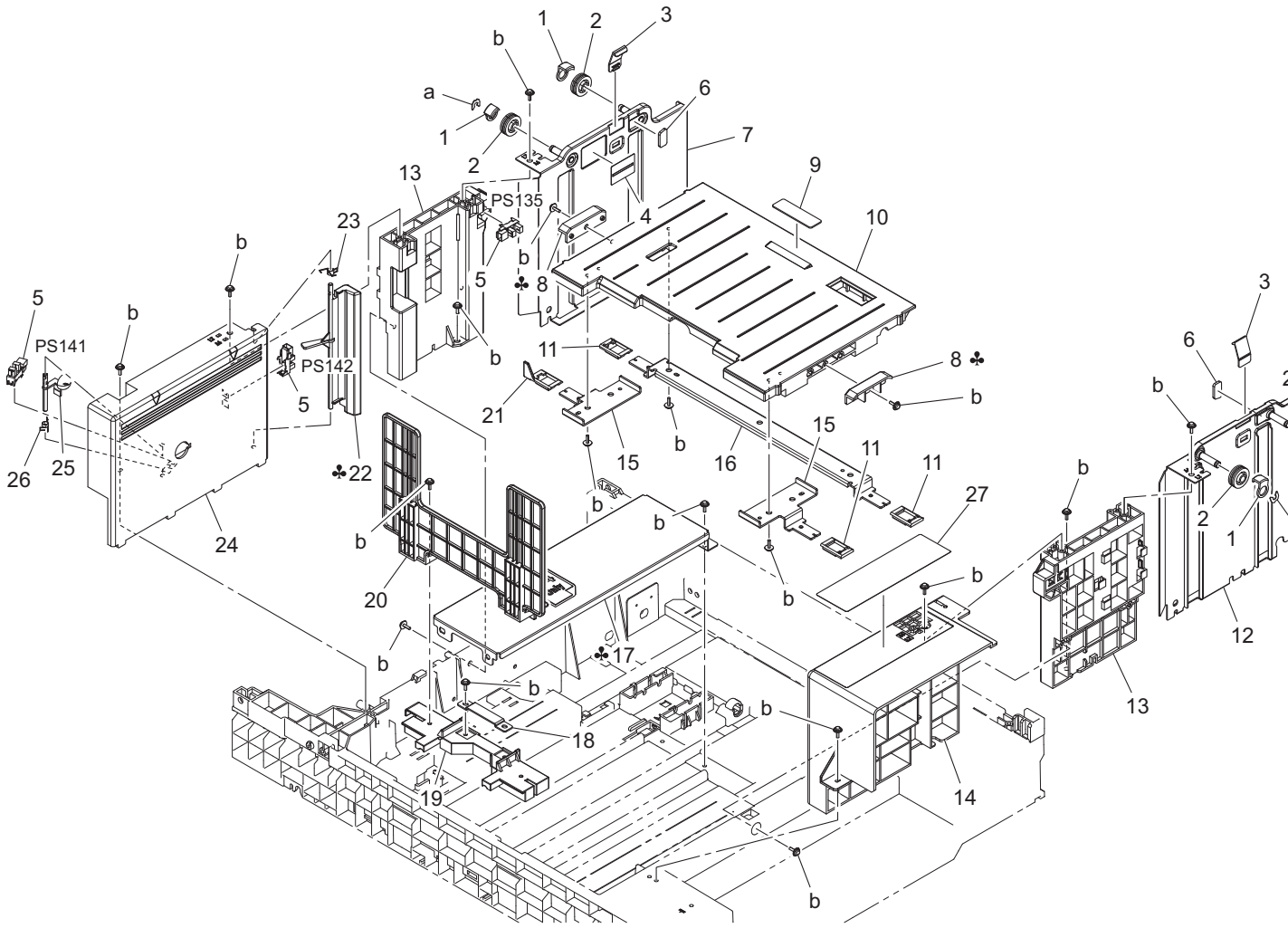

Page	Key	Parts No.	Description	Service Manaul	Destinations	Class	Quantity
9	1	4425377001	COVER			D	4
9	2	4425371501	PULLEY			C	4
9	3	A2XM628200	Regulating Claw			C	2
9	4	4348730601	LABEL MAX			D	1
9	5	A108M50100	Photointerrupter	Main tray paper near empty sensor (PS135) Sub tray paper remaining amount sensor (PS141) Division board sensor (PS142)		B	3
9	6	A2XM628100	Seal			C	2
9	7	A2XM620501	Regulating Plate			D	1
9	8	1075375501	SPACER		A,A1,C,D1,D3,E,F2,G1,G2,H,I,J,K	D	2
9	9	1052540901	FRICTION SHEET			C	1
9	10	A2XM622100	Lifting Plate			D	1
9	11	1075370813	HOLDER			D	3
9	12	A2XM620401	Regulating Plate			D	1
9	13	A2XM620800	Reinforce Part			D	2
9	14	A2XM620600	Regulating Plate			D	1
9	15	A2XM622200	Mounting Plate			D	2
9	16	A2XM622900	Mounting Plate			D	1
9	17	A2XM620200	Base frame		A,A1,C,D1,D3,E,F2,G1,G2,H,I,J,K	D	1
9	17	A2XM622000	Base frame		B	D	1

9	18	A2XM624300	Fixing Plate			D	1
9	19	A2XM624100	Regulating Part			D	1
9	20	A2XM624200	Regulating Plate			D	1
9	21	A2XM622800	Holder			D	1
9	22	A2XM620900	Lever		A,A1,C,D1,D3,E,F2,G1,G2,H,I,J,K	D	1
9	22	A2XM621901	Lever		B	D	1
9	23	A2XM621000	Torsion Coil spring			C	1
9	24	A2XM620700	Regulating Plate			D	1
9	25	A2XM625400	Lever /2			C	1
9	26	A2XM625500	Torsion Coil spring /2			C	1
9	27	A2XM941100	Processing Label /A			D	1
9	a	V218040086	E ring			V	
9	b	V153030803	Screw			V	

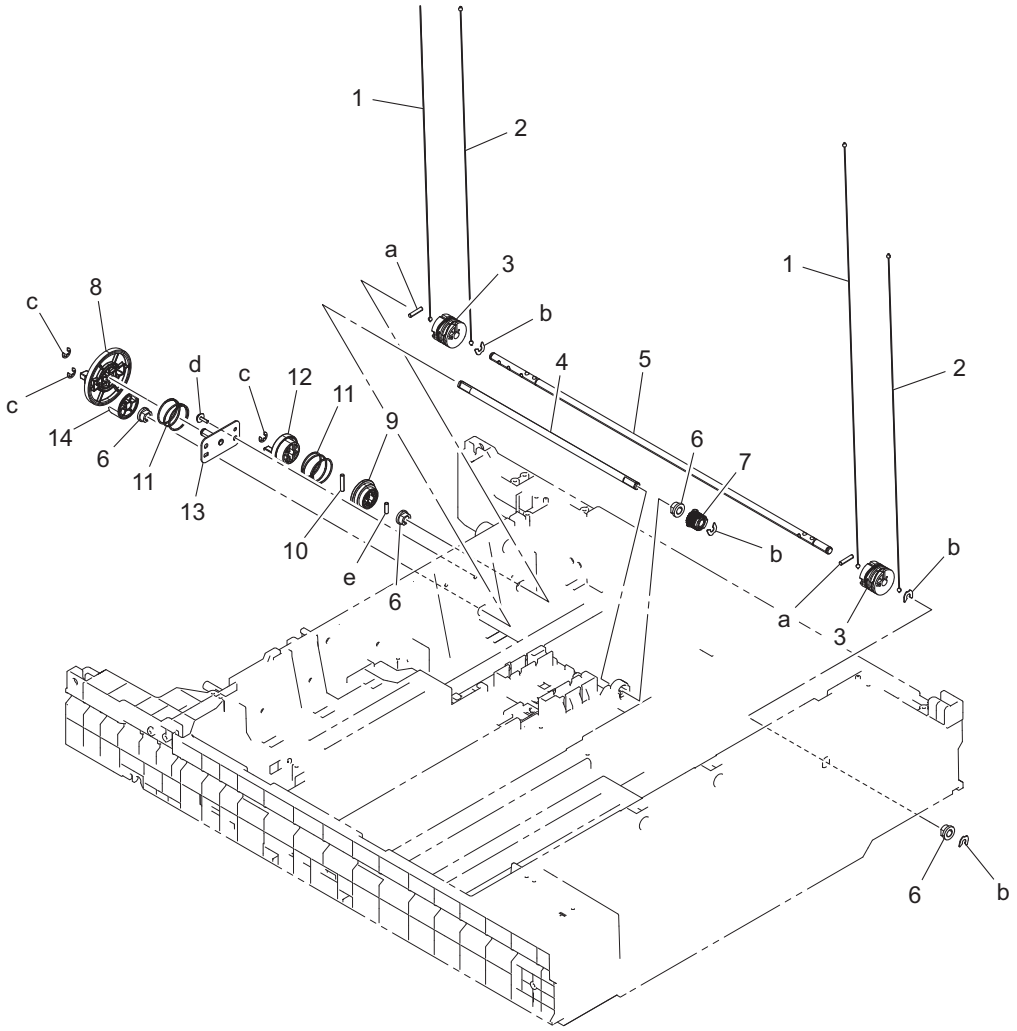

Page	Key	Parts No.	Description	Service Manaul	Destinations	Class	Quantity
10	1	A2XM622700	Wire /2			C	2
10	2	A2XM622600	Wire /1			C	2
10	3	A2XM622400	Pulley			C	2
10	4	A2XM623100	Shaft			D	1
10	5	A2XM622300	Shaft			D	1
10	6	A00J663200	Bushing			C	4
10	7	A2XM623500	Pulley			C	1
10	8	A2XM597501	Gear 61T			C	1
10	9	A2XM622500	Gear			C	1
10	10	4036254901	PIN			D	1
10	11	A2XM598100	Spring			C	2

10	12	A2XM597700	Joint			C	1
10	13	A2XMG60000	CONNECTION ASSY			D	1
10	14	A2XM597601	Gear 28T			C	1
10	a	V231301450	pin			V	
10	b	V218040086	E ring			V	
10	c	V217040001	E Ring			V	
10	d	V153030803	Screw			V	
10	e	V237301050	pin			V	

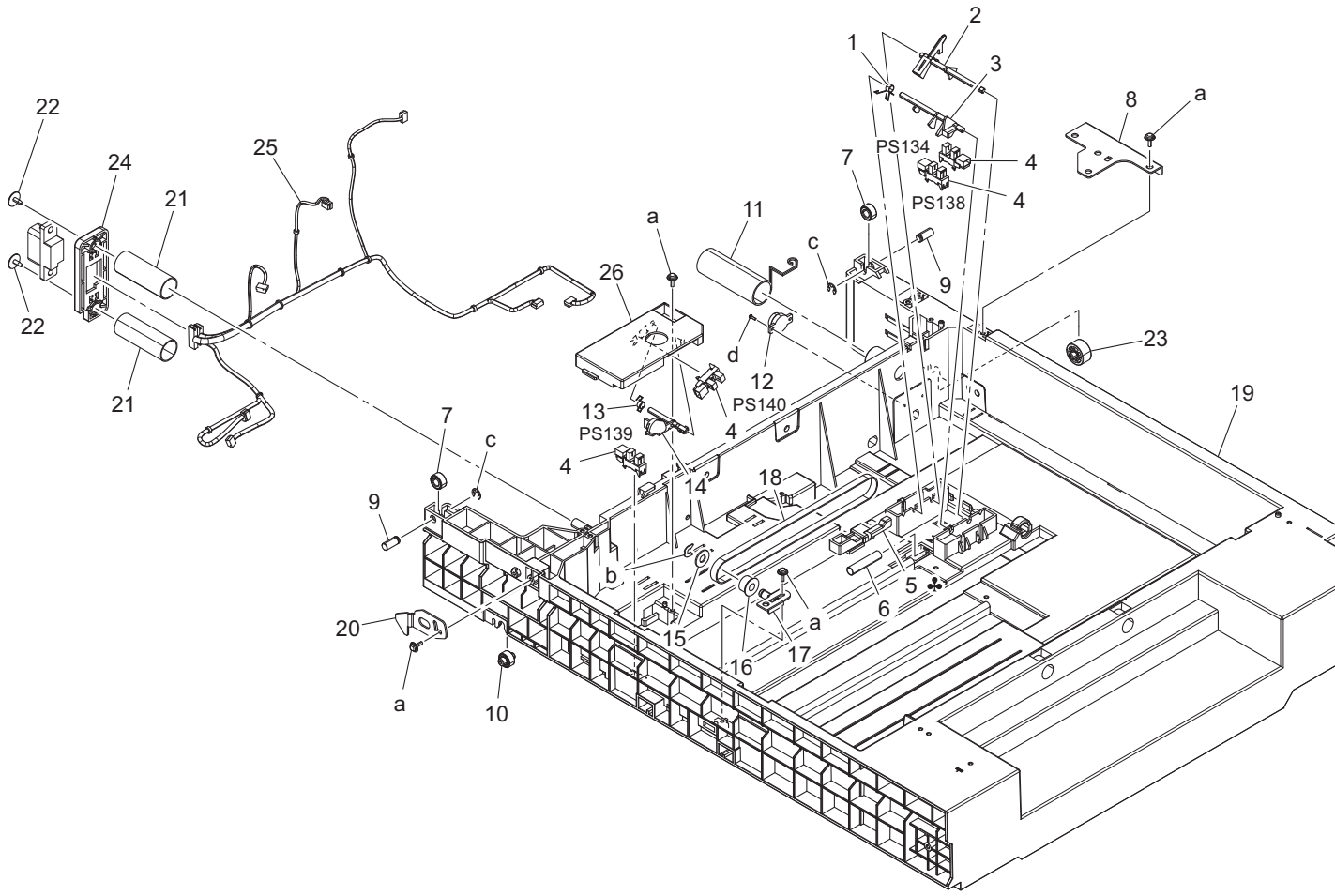

Page	Key	Parts No.	Description	Service Manaul	Destinations	Class	Quantity
11	1	A2XM625300	Torsion Coil spring /1			C	1
11	2	A2XM625600	Lever /3			C	1
11	3	A2XM625200	Lever /1			C	1
11	4	A108M50100	Photointerrupter	Main tray paper empty sensor (PS134) Shifter stop / lower limit position sensor (PS138) Shifter home sensor (PS139) Sub tray paper empty sensor (PS140)		B	4
11	5	A2XM623601	Slide Part		A,A1,C,D1,D3,E,F2,G1,G2,H,I,J,K	D	1
11	5	A2XM623701	Slide Part		B	D	1
11	6	A2XM623800	Compressing Coil spring			C	1
11	7	A161623400	Roll			D	2
11	8	A2XM621701	D00pper			D	1
11	9	A2XM621500	Shaft			D	2
11	10	A2XM621600	Roll			D	1
11	11	A2XM621400	Compressing Coil spring			C	1

11	12	A2XM623000	Dumper			C	1
11	13	A2XM625500	Torsion Coil spring /2			C	1
11	14	A2XM625400	Lever /2			C	1
11	15	4444350801	WASHER			C	1
11	16	4425374202	PULLEY 20T			C	1
11	17	A2XM623300	Mounting Plate /2			D	1
11	18	4425374701	TIMING BELT 740L			C	1
11	19	A2XM620103	Cassette			D	1
11	20	A2XM621800	Stopper			D	1
11	21	A2XM627200	Compressing Coil spring			C	2
11	22	4163529301	SCREW			C	2
11	23	A2XM623900	Roll			D	1
11	24	A2XM627100	Mounting Plate			D	1
11	25	A2XMN10500	Paperfeed Detection harness			D	1
11	26	A2XM625100	Cover			D	1
11	a	V153030803	Screw			V	
11	b	V218040086	E ring			V	
11	c	V217040001	E Ring			V	
11	d	V165020504	screw			V	

13.7 WIRING ACCESSORIES AND JIGS

1 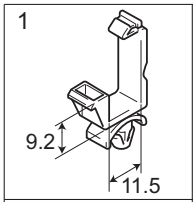	6 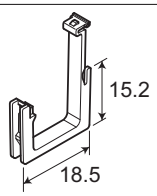						
2 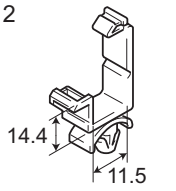							
3 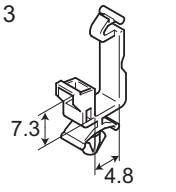							
4 White 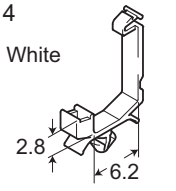							
5 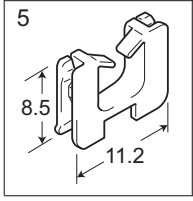							

Page	Key	Parts No.	Description	Service Manaul	Destinations	Class	Quantity
12	1	V500010005	saddle			D	
12	2	V500010007	saddle			D	
12	3	V500010020	Saddle			D	

12	4	V500010046	saddle			D	
12	5	V570010021	Saddle			D	
12	6	V570010026	saddle			D	

13.8 ACCESSORY PARTS

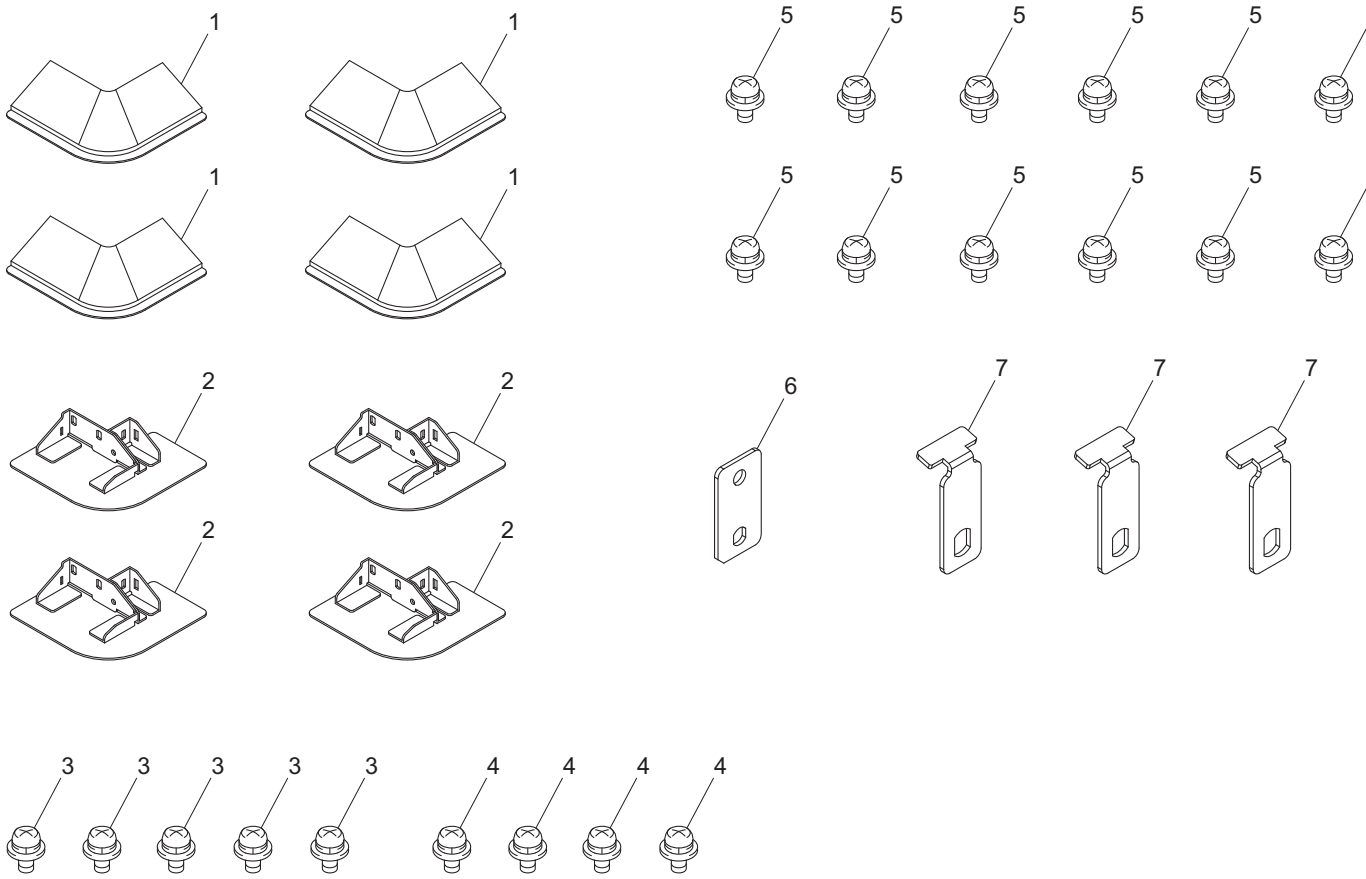

Page	Key	Parts No.	Description	Service Manaul	Destinations	Class	Quantity
13	1	4348204301	COVER			C	4
13	2	4348202502	STOP PLATE			C	4
13	3	V116040804	Screw			V	5
13	4	V137040803	SCREW			V	4
13	5	V116040803	Screw			V	12
13	6	A093104001	Stop plate			C	1
13	7	A0XW608300	Connecting Plate			C	3

13.9 MAINTENANCE LIST

- The items with no Page/Key numbers are not handled as spare parts.

No.	Section	PM Parts Description	Maintenance Cycle (K=1,000)		Parts No.	Destinations	Page/Key	Note
			QTY	Replace				
1	Paper Take-up Section	Pick-up Roller	1	300K	A00J563600		P6-13	*1 *2
2		Feed Roller	1	300K	A00J563600		P6-13	*1 *2
3		Separation Roller Assy	1	300K	A00J563600		P7-6	*1 *2

- *1: Actual durable cycle (life counter value)
- *2: Replace those parts at the same time.

13.10 DESTINATION

Destination No.	Destinations	V	Hz	Model No.

A	A1	JAPAN		100	50/60	A2XM-003
	A2	JAPAN				
B		USA, CANADA		120	60	A2XM-013
C		EUROPEAN TYPE		220-240	50/60	A2XM-WY3
D	D1	S.E ASIA TYPE	THAILAND,SRI LANKA,SINGAPORE,MALAYSIA,HONGKONG, PAKISTAN,INDIA,BANGLADESH,INDONESIA	220-240	50/60	A2XM-WY3
	D3	OCEAINA TYPE	AUSTRALIA,NEW ZEALAND	220-240	50/60	A2XM-WY3
E		PHILIPPINES		220-240	50/60	A2XM-WY3
F	F1	SAUDI ARABIA				
	F2	SAUDI ARABIA		220-240	50/60	A2XM-WY3
G	G1	C.S AMERICA		220-240	50/60	A2XM-013
	G2	C.S AMERICA		120	60	A2XM-WY3
H		TAIWAN		110	60	A2XM-WY3
I		JORDAN, LEBANON, SYRIA, SOUTH AFRICA, IRAQ, IRAN, N.YEMEN, CAMEROON, UAE, BAHRAIN, OMAN, QATAR, KUWAIT, KENYA, TUNISIA, IVORY COAST, MOROCCO		220-240	50/60	A2XM-WY3
J		CHINA		220-240	50/60	A2XM-WY3
K		KOREA		220-240	50/60	A2XM-WY3

14. OTHER OPTION (MK-730)

14.1 MK-730

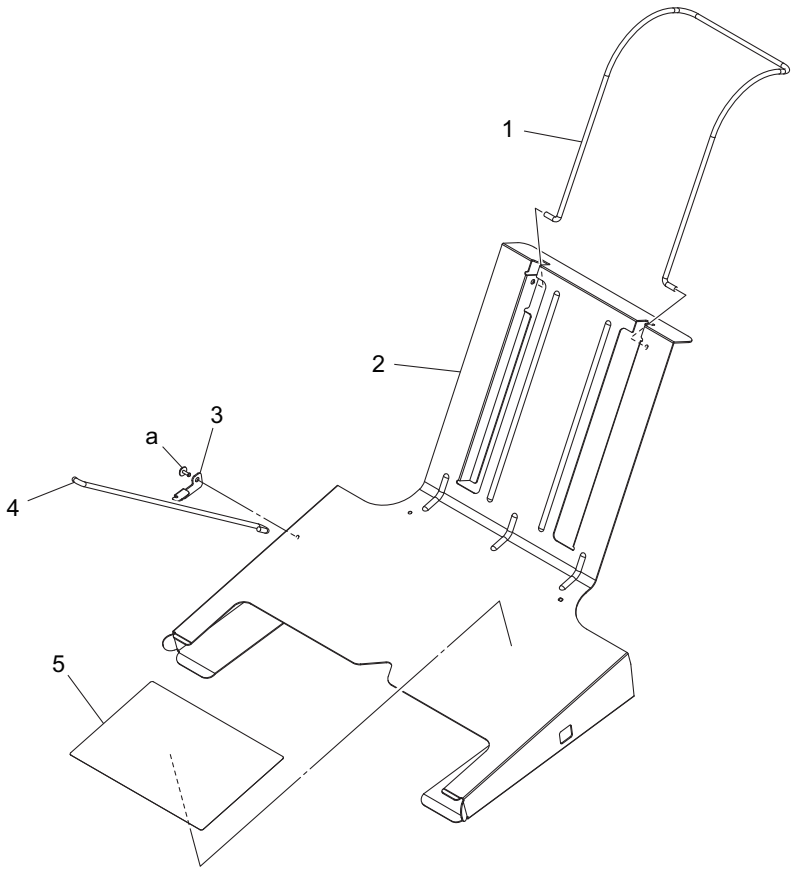

Page	Key	Parts No.	Description	Service Manaul	Destinations	Class	Quantity
1	1	4069620701	GUIDE			C	1
1	2	A4ME620100	Tray /ASSY			D	1
1	3	A4ME620300	Cover			D	1
1	4	A4ME620200	Hook			D	1
1	5	A0ED944000	Label Instructions			D	1
1	a	V144030803	SCREW			V	

14.2 DESTINATION

Destination No.		Destinations		V	Hz	Model No.
A	A1	JAPAN		100	50/60	A4MEWY1
	A2	JAPAN				
B		USA, CANADA		120	60	A4MEWY1
C		EUROPEAN TYPE		220-240	50/60	A4MEWY1
D	D1	S.E ASIA TYPE	THAILAND,SRI LANKA,SINGAPORE,MALAYSIA,HONGKONG, PAKISTAN,INDIA,BANGLADESH,INDONESIA	220-240	50/60	A4MEWY1
	D3	OCEAINA TYPE	AUSTRALIA,NEW ZEALAND	220-240	50/60	A4MEWY1
E		PHILIPPINES		220-240	50/60	A4MEWY1
F	F1	SAUDI ARABIA				

	F2	SAUDI ARABIA	220-240	50/60	A4MEWY1
G	G1	C.S AMERICA	220-240	50/60	A4MEWY1
	G2	C.S AMERICA	120	60	A4MEWY1
H		TAIWAN	110	60	A4MEWY1
I		JORDAN, LEBANON, SYRIA, SOUTH AFRICA, IRAQ, IRAN, N.YEMEN, CAMEROON, UAE, BAHRAIN, OMAN, QATAR, KUWAIT, KENYA, TUNISIA, IVORY COAST, MOROCCO	220-240	50/60	A4MEWY1
J		CHINA	220-240	50/60	A4MEWY1
K		KOREA	220-240	50/60	A4MEWY1

15. OTHER OPTION (HT-510)

15.1 HT-510

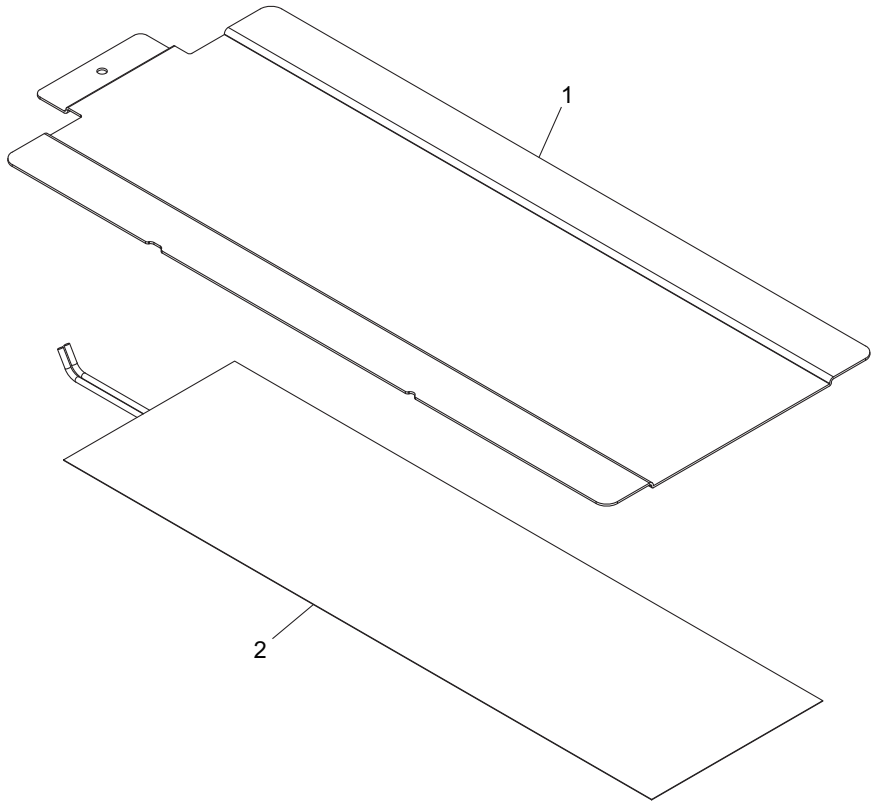

Page	Key	Parts No.	Description	Service Manual	Destinations	Class	Quantity
1	1	A3PN287100	Mounting Plate			D	1
1	2	A159M30000	Panel heater			C	1

15.2 WIRING ACCESSORIES AND JIGS

1 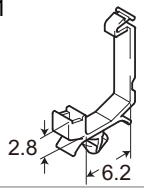	6	11	16	21	26	31	36
2	7	12	17	22	27	32	37
3	8	13	18	23	28	33	38
4	9	14	19	24	29	34	39
5	10	15	20	25	30	35	40

Page	Key	Parts No.	Description	Service Manual	Destinations	Class	Quantity
2	1	V500010046	saddle			D	

15.3 DESTINATION

Destination No.		Destinations		V	Hz	Model No.
A	A1	JAPAN		100	50/60	A3PNW01
	A2	JAPAN				
B		USA, CANADA				
C		EUROPEAN TYPE				
D	D1	S.E ASIA TYPE	THAILAND,SRI LANKA,SINGAPORE,MALAYSIA,HONGKONG, PAKISTAN,INDIA,BANGLADESH,INDONESIA			
	D3	OCEAINA TYPE	AUSTRALIA,NEW ZEALAND			
E		PHILIPPINES				
F	F1	SAUDI ARABIA				
	F2	SAUDI ARABIA				
G	G1	C.S AMERICA				
	G2	C.S AMERICA				
H		TAIWAN				
I		JORDAN, LEBANON, SYRIA, SOUTH AFRICA, IRAQ, IRAN, N.YEMEN, CAMEROON, UAE, BAHRAIN, OMAN, QATAR, KUWAIT, KENYA, TUNISIA, IVORY COAST, MOROCCO				
J		CHINA				

K	KOREA			

16. FAX CONTROLLER (FK-511)

16.1 FK-511

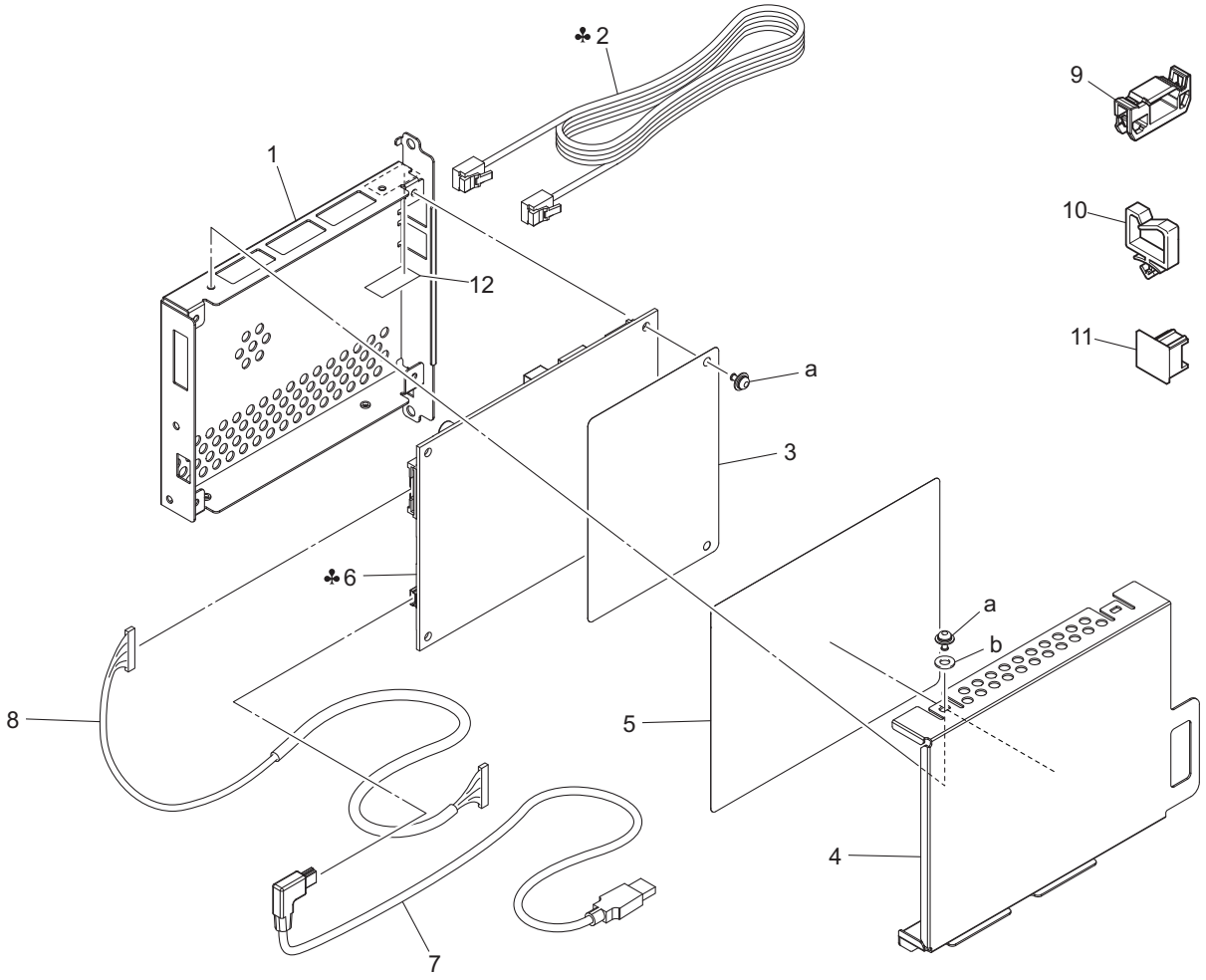

Page	Key	Parts No.	Description	Service Manual	Destinations	Class	Quantity
1	1	A4MF131300	Cover			D	1
1	2	127A90020	MODULAR WIRING 1		A,A1,B,F2,G1,G2	C	1
1	2	A161N15D00	Wiring /2		C	D	1
1	3	A4MF131500	Sheet			D	1
1	4	A4MF131200	Mounting Plate			D	1
1	5	A4MF131400	Sheet			D	1
1	6	A22MH01A1B	CONTROL BOARD ASSY		A,A1	I	1
1	6	A22MH01W1B	CONTROL BOARD ASSY		B,C,F2,G1,G2	I	1
1	7	A161N15800	Interface Cable		(C364/C284/C224/C454)	D	1
1	7	A2X0N15A00	Interface Cable /2		(C754/C654)	D	1
1	8	A161N15900	Power source Cable		(C364/C284/C224/C454)	D	1
1	8	A2X0N15B00	Power source Cable /2		(C754/C654)	D	1
1	9	V570010057	Wing Edge Saddle			D	1
1	10	V500010047	saddle			D	5
1	11	15MY73110	TERMINAL PROTECT COVER			C	1
1	12	A4MF131600	Sheet			D	1
1	a	V116030603	Screw			V	
1	b	V207030001	washer			V	

16.2 DESTINATION

Destination No.	Destinations	V	Hz	Model No.

A	A1	JAPAN		100	50/60	A4MFW01
	A2	JAPAN				
B		USA, CANADA		120	60	A4MF011
C		EUROPEAN TYPE		220-240	50/60	A4MF021
D	D1	S.E ASIA TYPE	THAILAND,SRI LANKA,SINGAPORE,MALAYSIA,HONGKONG, PAKISTAN,INDIA,BANGLADESH,INDONESIA	220-240	50/60	
	D3	OCEAINA TYPE	AUSTRALIA,NEW ZEALAND	220-240	50/60	
E		PHILIPPINES		220-240	50/60	
F	F1	SAUDI ARABIA				
	F2	SAUDI ARABIA		220-240	50/60	A4MF011
G	G1	C.S AMERICA		220-240	50/60	A4MF011
	G2	C.S AMERICA		120	60	A4MF011
H		TAIWAN		110	60	
I		JORDAN, LEBANON, SYRIA, SOUTH AFRICA, IRAQ, IRAN, N.YEMEN, CAMEROON, UAE, BAHRAIN, OMAN, QATAR, KUWAIT, KENYA, TUNISIA, IVORY COAST, MOROCCO		220-240	50/60	
J		CHINA		220-240	50/60	
K		KOREA		220-240	50/60	

17. OTHER OPTION (EK-606)

17.1 EK-606

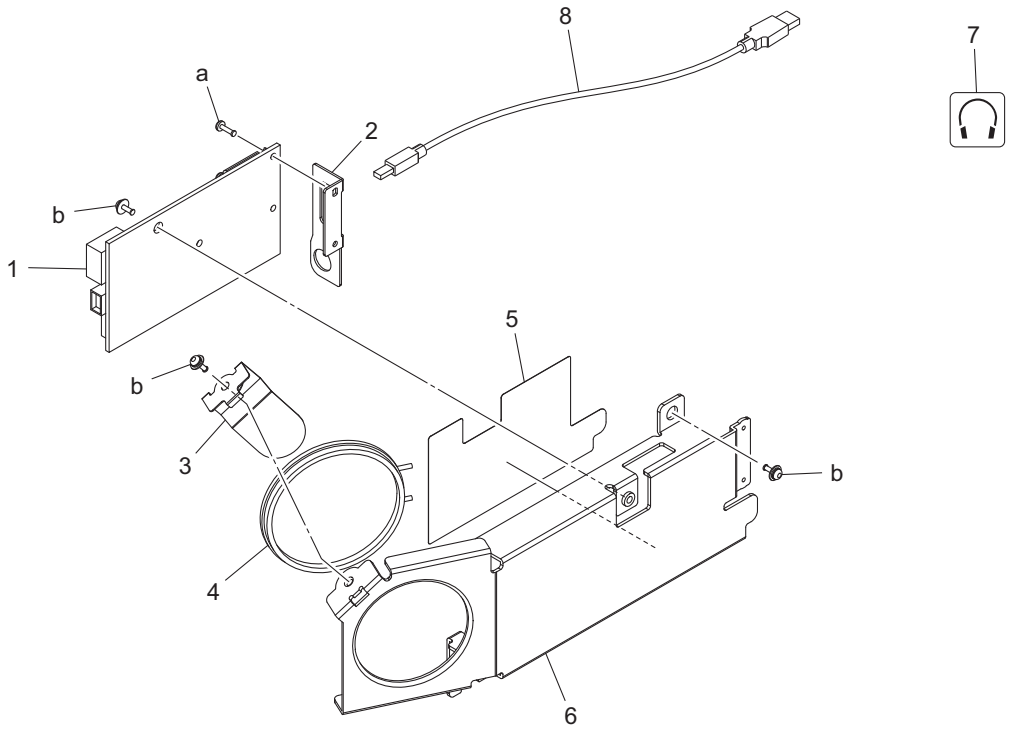

Page	Key	Parts No.	Description	Service Manual	Destinations	Class	Quantity
1	1	A0P0H02700	PWB assembly(PWB-HUB ASSY)			D	1
1	2	A0P0148500	Mounting Plate /1			D	1
1	3	A0P0148600	Holding Plate			D	1
1	4	A0P0M72600	Speaker			D	1
1	5	A0YC130200	Protection Film			C	1
1	6	A4MJ134002	Mounting Plate			D	1
1	7	A0P0947600	Label			D	1
1	8	A0P0N15400	Cable			D	1
1	a	V111020603	screw			V	
1	b	V116030803	Screw			V	

17.2 WIRING ACCESSORIES AND JIGS

1 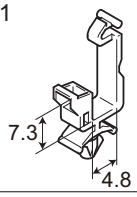	6	11	16	21	26	31	36
2 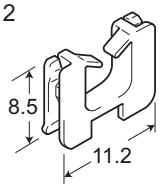	7	12	17	22	27	32	37
3	8	13	18	23	28	33	38
4	9	14	19	24	29	34	39
5	10	15	20	25	30	35	40

Page	Key	Parts No.	Description	Service Manual	Destinations	Class	Quantity
2	1	V500010020	Saddle			D	
2	2	V570010021	Saddle			D	

17.3 DESTINATION

Destination No.		Destinations		V	Hz	Model No.
A	A1	JAPAN		100	50/60	A4MJWY1
	A2	JAPAN				
B		USA, CANADA		120	60	A4MJWY1
C		EUROPEAN TYPE		220-240	50/60	A4MJWY1
D	D1	S.E ASIA TYPE	THAILAND,SRI LANKA,SINGAPORE,MALAYSIA,HONGKONG, PAKISTAN,INDIA,BANGLADESH,INDONESIA	220-240	50/60	A4MJWY1
	D3	OCEAINA TYPE	AUSTRALIA,NEW ZEALAND	220-240	50/60	A4MJWY1
E		PHILIPPINES		220-240	50/60	A4MJWY1
F	F1	SAUDI ARABIA				
	F2	SAUDI ARABIA		220-240	50/60	A4MJWY1
G	G1	C.S AMERICA		220-240	50/60	A4MJWY1
	G2	C.S AMERICA		120	60	A4MJWY1
H		TAIWAN		110	60	A4MJWY1

I	JORDAN, LEBANON, SYRIA, SOUTH AFRICA, IRAQ, IRAN, N.YEMEN, CAMEROON, UAE, BAHRAIN, OMAN, QATAR, KUWAIT, KENYA, TUNISIA, IVORY COAST, MOROCCO	220-240	50/60	A4MJWY1
J	CHINA	220-240	50/60	A4MJWY1
K	KOREA	220-240	50/60	A4MJWY1

18. OTHER OPTION (EK-607)

18.1 EK-607

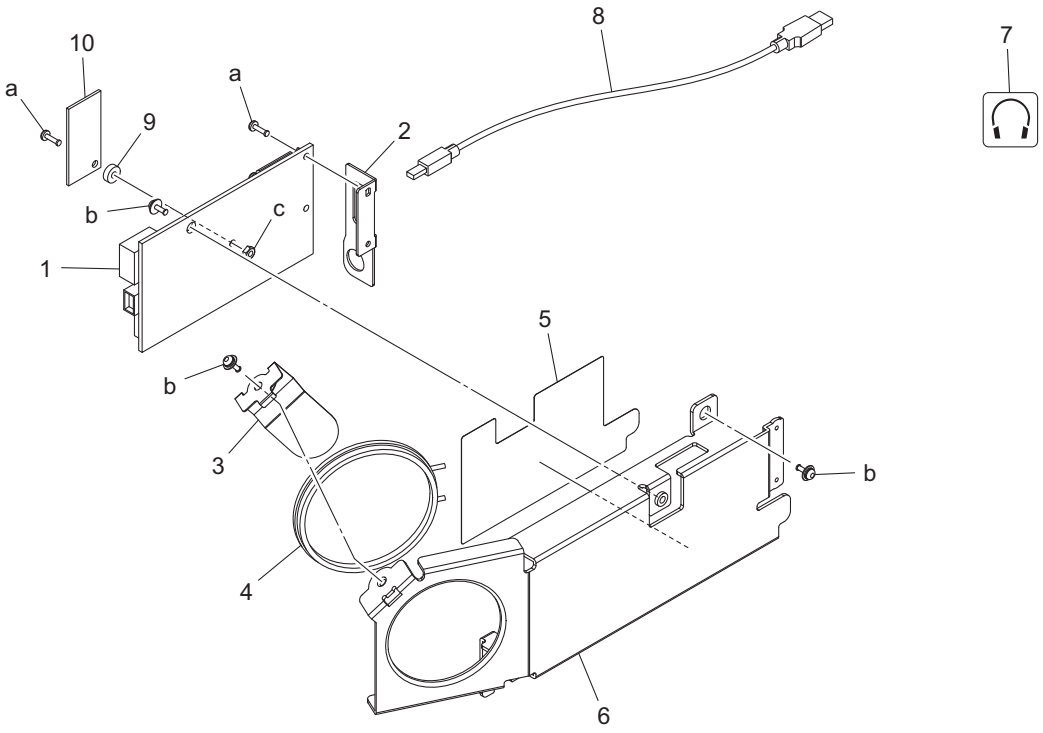

Page	Key	Parts No.	Description	Service Manaul	Destinations	Class	Quantity
1	1	A0P0H02700	PWB assembly(PWB-HUB ASSY)			D	1
1	2	A0P0148500	Mounting Plate /1			D	1
1	3	A0P0148600	Holding Plate			D	1
1	4	A0P0M72600	Speaker			D	1
1	5	A0YC130200	Protection Film			C	1
1	6	A4MJ134002	Mounting Plate			D	1
1	7	A0P0947600	Label			D	1
1	8	A0P0N15400	Cable			D	1
1	9	A0P0149500	Spacer			D	1
1	10	A0P0M72500	Unit			D	1
1	a	V111020603	screw			V	
1	b	V116030803	Screw			V	
1	c	V195020003	nut			V	

18.2 WIRING ACCESSORIES AND JIGS

1 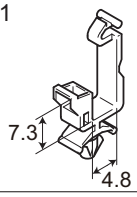	6	11	16	21	26	31	36
2 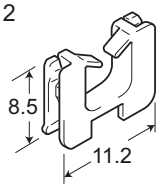	7	12	17	22	27	32	37
3	8	13	18	23	28	33	38
4	9	14	19	24	29	34	39
5	10	15	20	25	30	35	40

Page	Key	Parts No.	Description	Service Manaul	Destinations	Class	Quantity
2	1	V500010020	Saddle			D	
2	2	V570010021	Saddle			D	

18.3 DESTINATION

Destination No.		Destinations		V	Hz	Model No.
A	A1	JAPAN		100	50/60	A4MKWY1
	A2	JAPAN				
B		USA, CANADA		120	60	A4MKWY1
C		EUROPEAN TYPE		220-240	50/60	A4MKWY1
D	D1	S.E ASIA TYPE	THAILAND,SRI LANKA,SINGAPORE,MALAYSIA,HONGKONG, PAKISTAN,INDIA,BANGLADESH,INDONESIA	220-240	50/60	A4MKWY1
	D3	OCEAINA TYPE	AUSTRALIA,NEW ZEALAND	220-240	50/60	A4MKWY1
E		PHILIPPINES		220-240	50/60	A4MJWY1
F	F1	SAUDI ARABIA				
	F2	SAUDI ARABIA		220-240	50/60	A4MKWY1
G	G1	C.S AMERICA		220-240	50/60	A4MKWY1
	G2	C.S AMERICA		120	60	A4MKWY1
H		TAIWAN		110	60	A4MKWY1

I	JORDAN, LEBANON, SYRIA, SOUTH AFRICA, IRAQ, IRAN, N.YEMEN, CAMEROON, UAE, BAHRAIN, OMAN, QATAR, KUWAIT, KENYA, TUNISIA, IVORY COAST, MOROCCO	220-240	50/60	A4MKWY1
J	CHINA			
K	KOREA	220-240	50/60	A4MKWY1

19. OTHER OPTION (WT-506)

19.1 WT-506

P 1

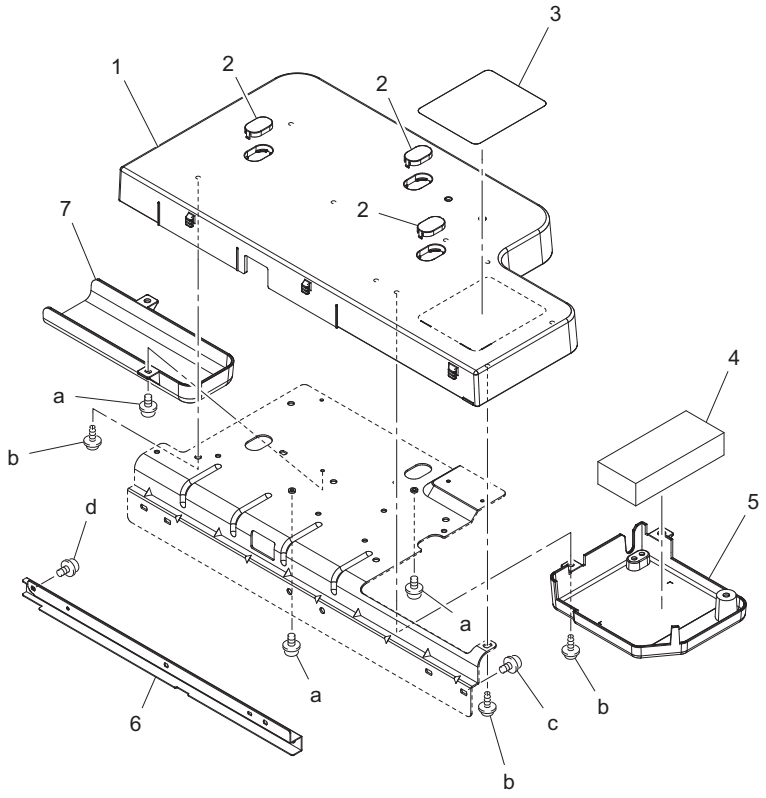

Page	Key	Parts No.	Description	Service Manual	Destinations	Class	Quantity
1	1	A0W4165800	Tray			D	1
1	2	A07E166000	Cover			D	3
1	3	A0W4166100	Label			D	1
1	4	A0W4166200	Spacer			D	1
1	5	A0W4166000	Cover			D	1
1	6	A0W4167000	Mounting Plate			D	1
1	7	A0W4166600	Cover			D	1
1	a	V125041001	Screw			D	
1	b	V153040803	screw			V	
1	c	V116041603	Screw			V	
1	d	V116030803	Screw			V	

19.2 WIRING ACCESSORIES AND JIGS

P 2

1 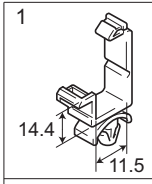							
2 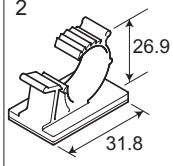							
3 							

Page	Key	Parts No.	Description	Service Manual	Destinations	Class	Quantity
2	1	V500010007	saddle			D	
2	2	V500020075	Clamp			D	
2	3	V501010001	band			D	

19.3 DESTINATION

Destination No.		Destinations		V	Hz	Model No.
A	A1	JAPAN				
	A2	JAPAN				
B		USA, CANADA		120	60	A0W4-WY2
C		EUROPEAN TYPE		220-240	50/60	A0W4-WY2
D	D1	S.E ASIA TYPE	THAILAND, SRI LANKA, SINGAPORE, MALAYSIA, HONG KONG, PAKISTAN, INDIA, BANGLADESH, INDONESIA	220-240	50/60	A0W4-WY2
	D3	OCEAINA TYPE	AUSTRALIA, NEW ZEALAND	220-240	50/60	A0W4-WY2
E		PHILIPPINES		220-240	50/60	A0W4-WY2
F	F1	SAUDI ARABIA				
	F2	SAUDI ARABIA		220-240	50/60	A0W4-WY2
G	G1	C.S AMERICA		220-240	50/60	A0W4-WY2
	G2	C.S AMERICA		120	60	A0W4-WY2
H		TAIWAN				
I		JORDAN, LEBANON, SYRIA, SOUTH AFRICA, IRAQ, IRAN, N.YEMEN, CAMEROON, UAE, BAHRAIN, OMAN, QATAR, KUWAIT, KENYA, TUNISIA, IVORY COAST, MOROCCO		220-240	50/60	A0W4-WY2

Destination No.	Destinations	V	Hz	Model No.
J	CHINA			
K	KOREA	220-240	50/60	A0W4-WY2

20. OTHER OPTION (KP-101)

20.1 KP-101

P 1

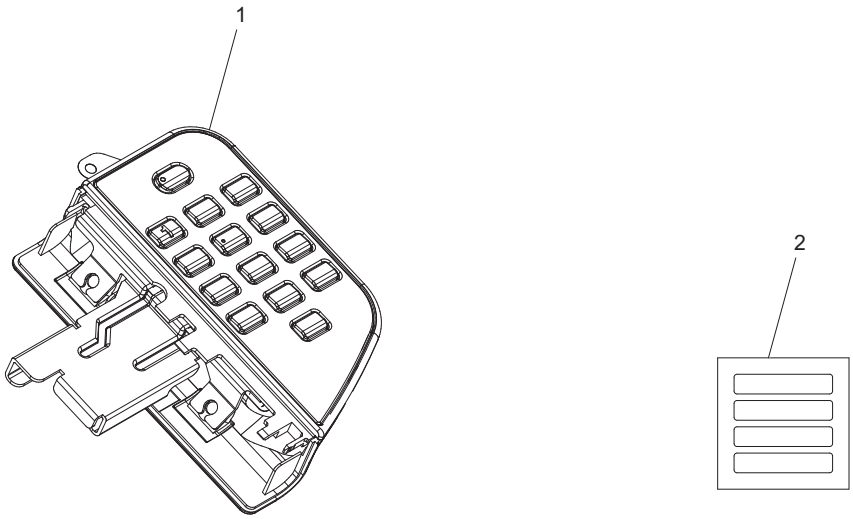

Page	Key	Parts No.	Description	Service Manual	Destinations	Class	Quantity
1	1	A64TM70001	Panel assembly			C	1
1	2	A64T940000	Label Voice Guide			C	1

20.2 DESTINATION

Destination No.		Destinations		V	Hz	Model No.
A	A1	JAPAN				
	A2	JAPAN				
B		USA, CANADA		120	60	A64T-WY1
C		EUROPEAN TYPE		220-240	50/60	A64T-WY1
D	D1	S.E ASIA TYPE	THAILAND, SRI LANKA, SINGAPORE, MALAYSIA, HONG KONG, PAKISTAN, INDIA, BANGLADESH, INDONESIA	220-240	50/60	A64T-WY1
	D3	OCEAINA TYPE	AUSTRALIA, NEW ZEALAND	220-240	50/60	A64T-WY1
E		PHILIPPINES		220-240	50/60	A64T-WY1
F	F1	SAUDI ARABIA				
	F2	SAUDI ARABIA		220-240	50/60	A64T-WY1
G	G1	C.S AMERICA		220-240	50/60	A64T-WY1
	G2	C.S AMERICA		120	60	A64T-WY1
H		TAIWAN				
I		JORDAN, LEBANON, SYRIA, SOUTH AFRICA, IRAQ, IRAN, N.YEMEN, CAMEROON, UAE, BAHRAIN, OMAN, QATAR, KUWAIT, KENYA, TUNISIA, IVORY COAST, MOROCCO		220-240	50/60	A64T-WY1

Destination No.	Destinations	V	Hz	Model No.
J	CHINA			
K	KOREA	220-240	50/60	A64T-WY1

21. OTHER OPTION (MK-735)

21.1 MK-735

P 1

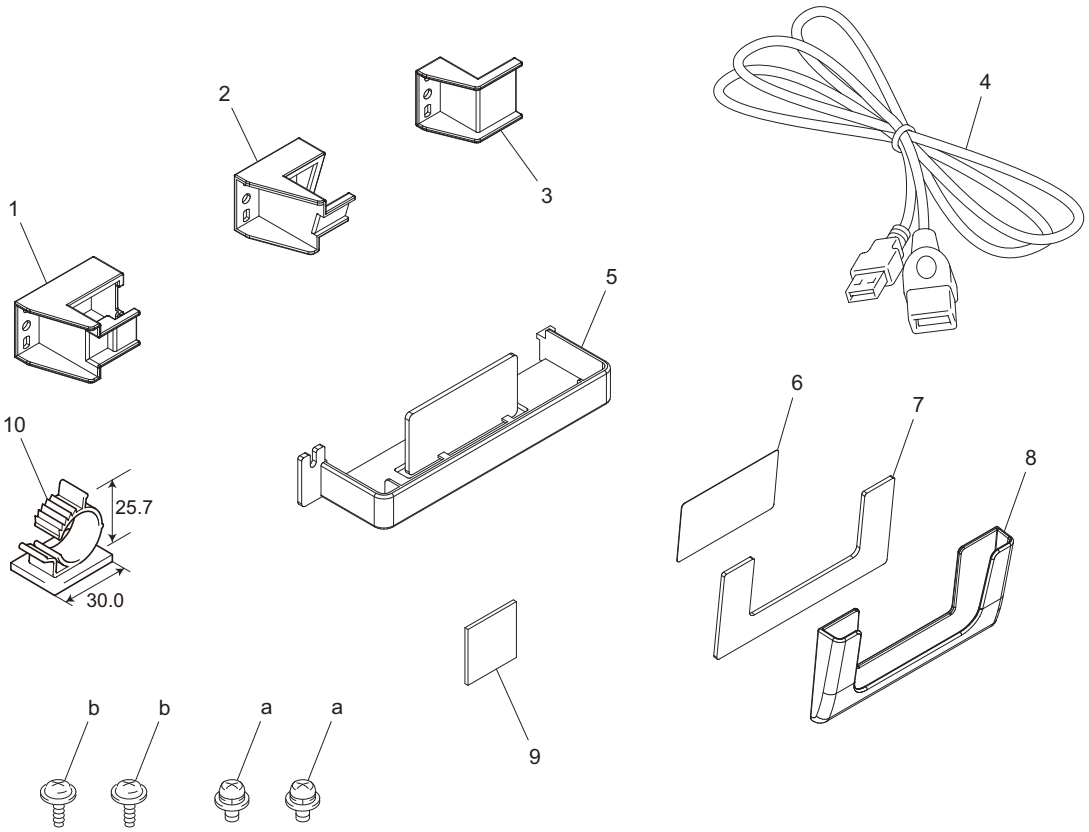

Page	Key	Parts No.	Description	Service Manual	Destinations	Class	Quantity
1	1	A4NM135100	Mounting Plate			D	1
1	2	A4NM135200	Mounting Plate			D	1
1	3	A4NM135300	Mounting Plate			D	1
1	4	A161N15700	Interface Cable			D	1
1	5	A4NM135000	Receiving Pedestal			D	1
1	6	A4NM135700	Label			D	1
1	7	A4NM135500	Seal			D	1
1	8	A4NM135400	Holder			D	1
1	9	A4NM135600	Seal			D	1
1	10	V500020095	ADJUSTABLE CLAMP			D	1
1	a	V116030803	Screw			V	
1	b	V153030804	screw			V	

21.2 DESTINATION

Destination No.		Destinations		V	Hz	Model No.
A	A1	JAPAN				
	A2	JAPAN				
B		USA, CANADA		120	60	A4NM-WY1
C		EUROPEAN TYPE		220-240	50/60	A4NM-WY1
D	D1	S.E ASIA TYPE	THAILAND, SRI LANKA, SINGAPORE, MALAYSIA, HONG KONG, PAKISTAN, INDIA, BANGLADESH, INDONESIA	220-240	50/60	A4NM-WY1
	D3	OCEAINA TYPE	AUSTRALIA, NEW ZEALAND	220-240	50/60	A4NM-WY1

Destination No.		Destinations	V	Hz	Model No.
E		PHILIPPINES	220-240	50/60	A4NM-WY1
F	F1	SAUDI ARABIA			
	F2	SAUDI ARABIA	220-240	50/60	A4NM-WY1
G	G1	C.S AMERICA	220-240	50/60	A4NM-WY1
	G2	C.S AMERICA	120	60	A4NM-WY1
H		TAIWAN			
I		JORDAN, LEBANON, SYRIA, SOUTH AFRICA, IRAQ, IRAN, N.YEMEN, CAMEROON, UAE, BAHRAIN, OMAN, QATAR, KUWAIT, KENYA, TUNISIA, IVORY COAST, MOROCCO	220-240	50/60	A4NM-WY1
J		CHINA			
K		KOREA	220-240	50/60	A4NM-WY1

22. OTHER OPTION (DK-705)

22.1 DK-705

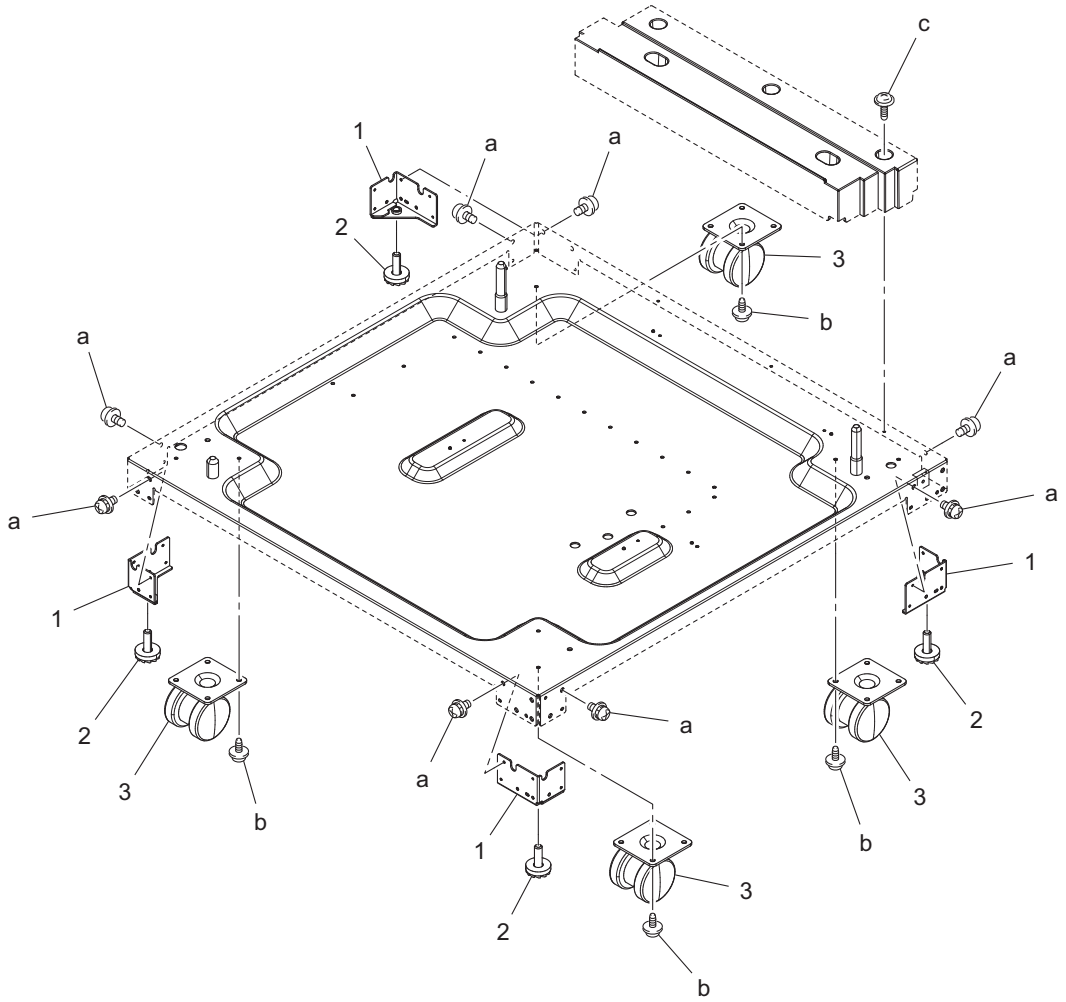

Page	Key	Parts No.	Description	Service Manual	Destinations	Class	Quantity
1	1	A2XM580200	Mounting Plate			D	4
1	2	4348202401	ADJUSTING PLATE			D	4
1	3	4061101000	Castor			C	4
1	a	V116030804	Screw			V	
1	b	V137040803	SCREW			V	
1	c	V144030803	SCREW			V	

22.2 ACCESSORY PARTS

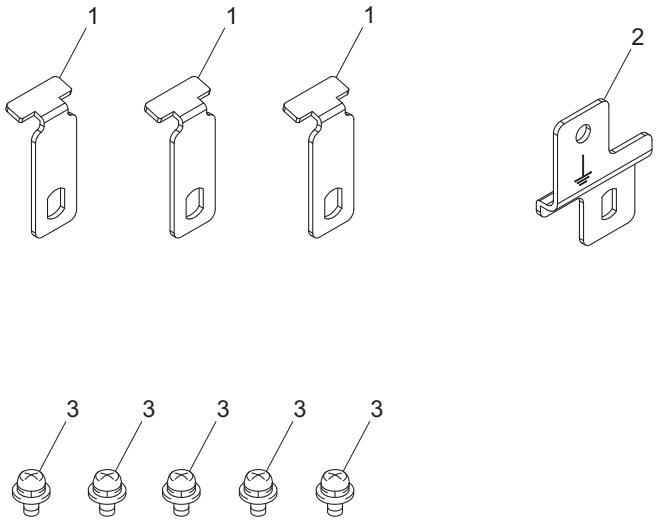

Page	Key	Parts No.	Description	Service Manual	Destinations	Class	Quantity
2	1	A0XW608300	Connecting Plate			C	3
2	2	A2XM580500	Connecting Plate			D	1
2	3	V116040804	Screw			V	5

22.3 DESTINATION

Destination No.		Destinations		V	Hz	Model No.
A	A1	JAPAN		100	50/60	A2XM-WY5
	A2	JAPAN				
B		USA, CANADA		120	60	A2XM-WY5
C		EUROPEAN TYPE				
D	D1	S.E ASIA TYPE	THAILAND, SRI LANKA, SINGAPORE, MALAYSIA, HONG KONG, PAKISTAN, INDIA, BANGLADESH, INDONESIA	220-240	50/60	A2XM-WY5
	D3	OCEAINA TYPE	AUSTRALIA, NEW ZEALAND	220-240	50/60	A2XM-WY5
E		PHILIPPINES		220-240	50/60	A2XM-WY5
F	F1	SAUDI ARABIA				
	F2	SAUDI ARABIA		220-240	50/60	A2XM-WY5
G	G1	C.S AMERICA		220-240	50/60	A2XM-WY5
	G2	C.S AMERICA		120	60	A2XM-WY5
H		TAIWAN		110	60	A2XM-WY5

Destination No.	Destinations	V	Hz	Model No.
I	JORDAN, LEBANON, SYRIA, SOUTH AFRICA, IRAQ, IRAN, N.YEMEN, CAMEROON, UAE, BAHRAIN, OMAN, QATAR, KUWAIT, KENYA, TUNISIA, IVORY COAST, MOROCCO	220-240	50/60	A2XM-WY5
J	CHINA	220-240	50/60	A2XM-WY5
K	KOREA	220-240	50/60	A2XM-WY5

23. OTHER OPTION (DK-510)

23.1 EXTERNAL PARTS

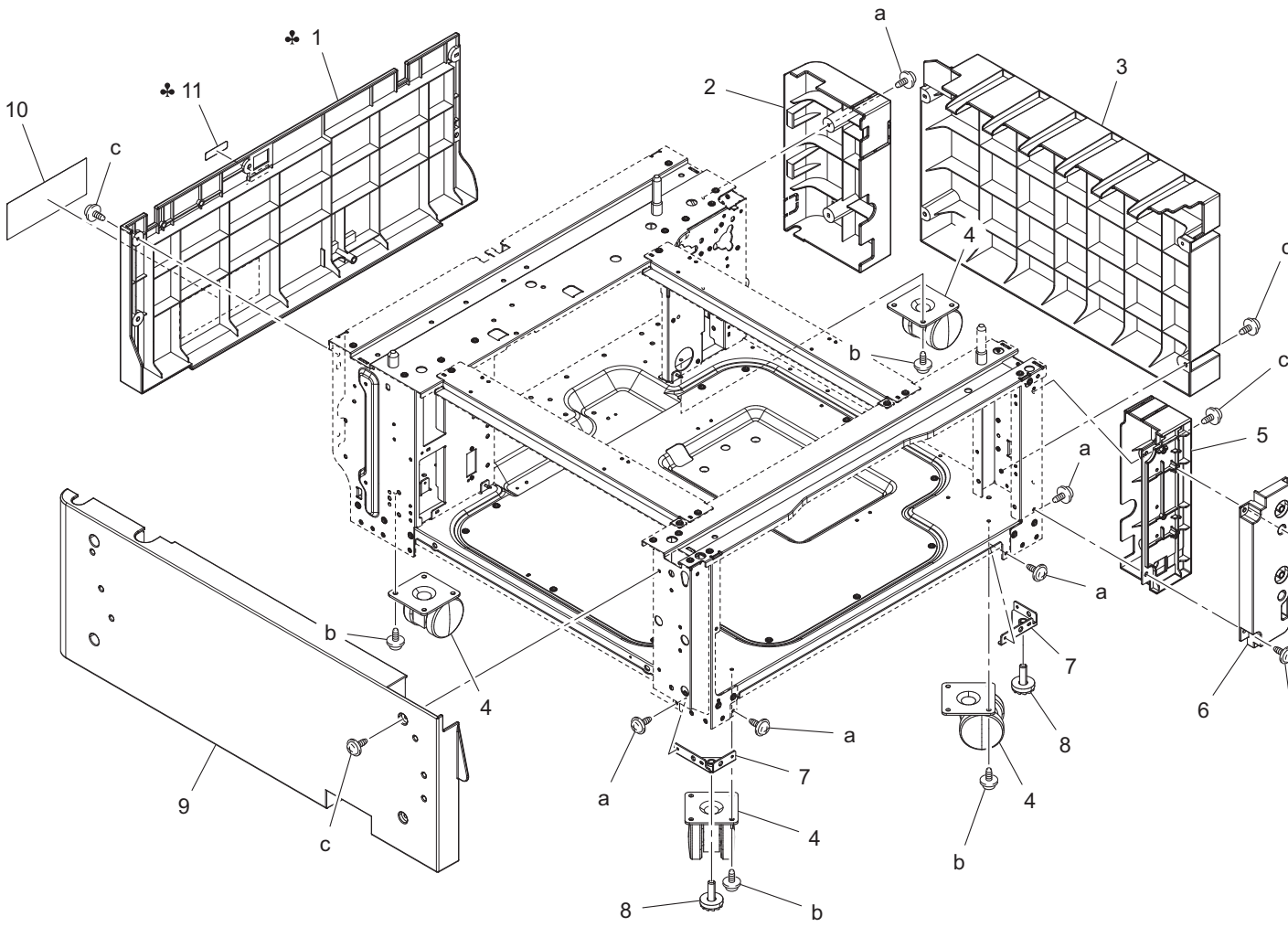

Page	Key	Parts No.	Description	Service Manual	Destinations	Class	Quantity
1	1	A2XM570200	Cover /Rear		A,A1	C	1
1	1	A2XM570801	Cover /Rear		B,D1,D3,E,F2,G1,G2,H,I,J,K	C	1
1	2	A2XM570301	Cover /Right rear			C	1
1	3	A2XM570701	Cover /Right			D	1
1	4	4061101000	Castor			C	4
1	5	A2XM570600	Cover /Right front			C	1
1	6	A2XM570500	Cover			C	1
1	7	A2XM561000	Mounting Plate			D	2
1	8	4348202401	ADJUSTING PLATE			D	2
1	9	A2XM570100	Cover /Left			C	1
1	10	A2XM942300	Label			C	1
1	11	A093940800	Label		A,A1	C	1
1	a	V137030803	screw			V	
1	b	V137040803	SCREW			V	
1	c	V137030804	screw			V	
1	d	V153030804	screw			V	

23.2 ELECTRICAL COMPONENTS

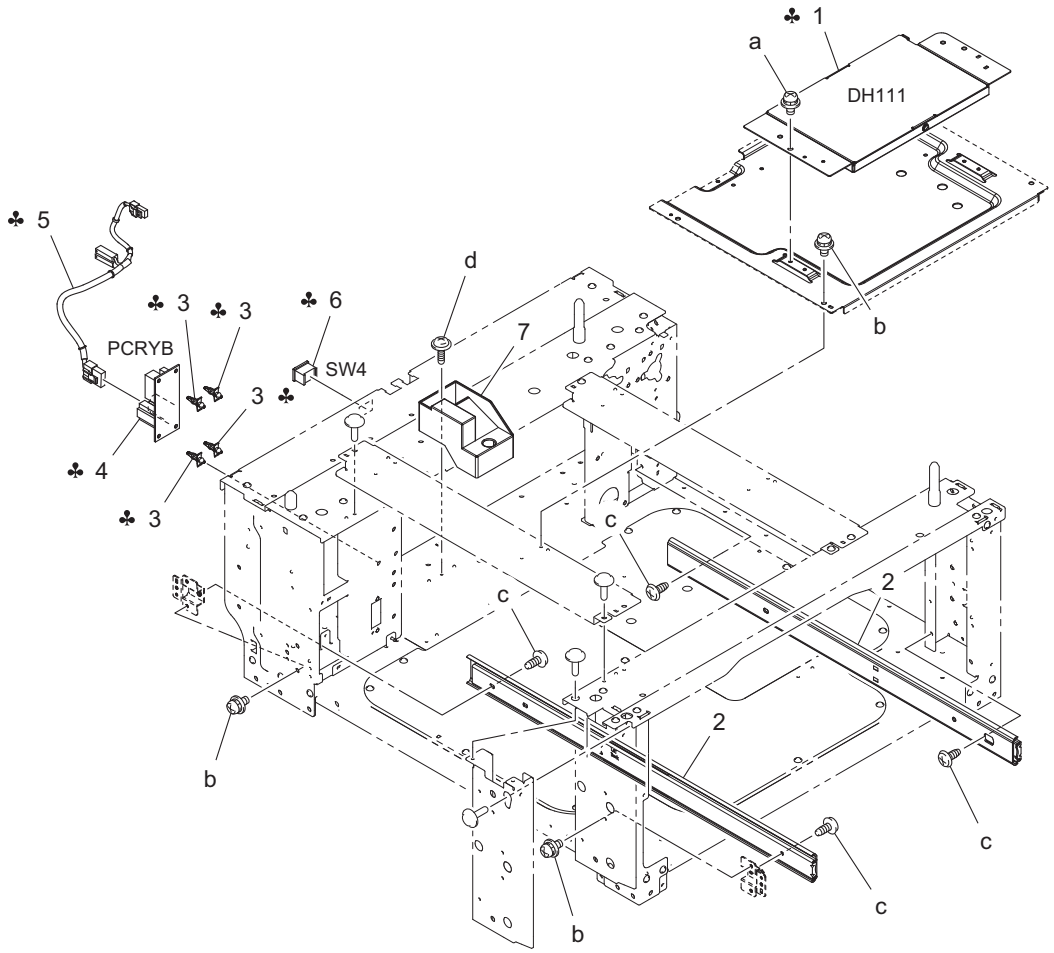

Page	Key	Parts No.	Description	Service Manual	Destinations	Class	Quantity
2	1	A2XMR70000	Heater Assy		A,A1	D	1
2	2	4348203201	RAIL			D	2
2	3	V502010033	spacer		A,A1	D	4
2	4	A093H00100	PWB Assy		A,A1	C	1
2	5	A2XMN10001	Heater Relay harness		A,A1	D	1
2	6	A093M60000	Rocker switch		A,A1	C	1
2	7	A2XM610002	Stopper			D	1
2	a	V116030603	Screw			V	
2	b	V116030803	Screw			V	
2	c	V136040803	screw			V	
2	d	V144030803	SCREW			V	

23.3 RECEIPT TRAY

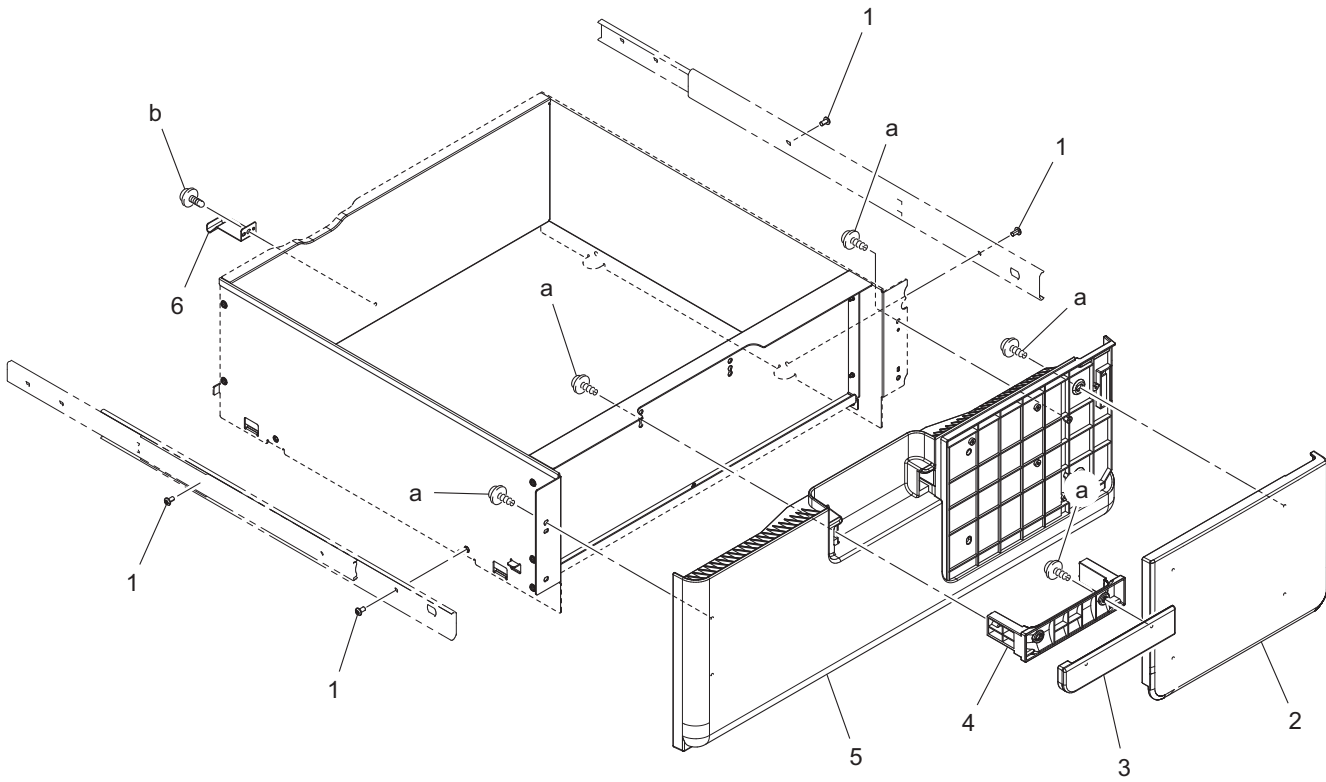

Page	Key	Parts No.	Description	Service Manual	Destinations	Class	Quantity
3	1	1151330001	SCREW			C	4
3	2	A2XM568900	Cover			D	1
3	3	A2XM568700	Cover			C	1
3	4	A161626900	Handle			C	1
3	5	A2XM626102	Cover			C	1
3	6	A093622801	Plate spring			D	1
3	a	V153030803	Screw			V	
3	b	V144030803	SCREW			V	

23.4 WIRING ACCESSORIES AND JIGS

1 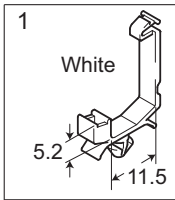							
2 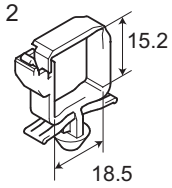							
3 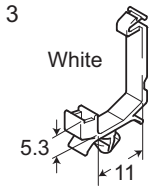							
4 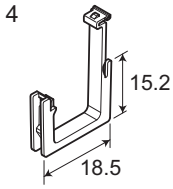							

Page	Key	Parts No.	Description	Service Manual	Destinations	Class	Quantity
4	1	V500010082	Locking Wire Saddle			D	
4	2	V500010083	Locking Wire Saddle			D	
4	3	V500020100	Mini Locking wire saddle			D	
4	4	V570010026	saddle			D	

23.5 ACCESSORY PARTS

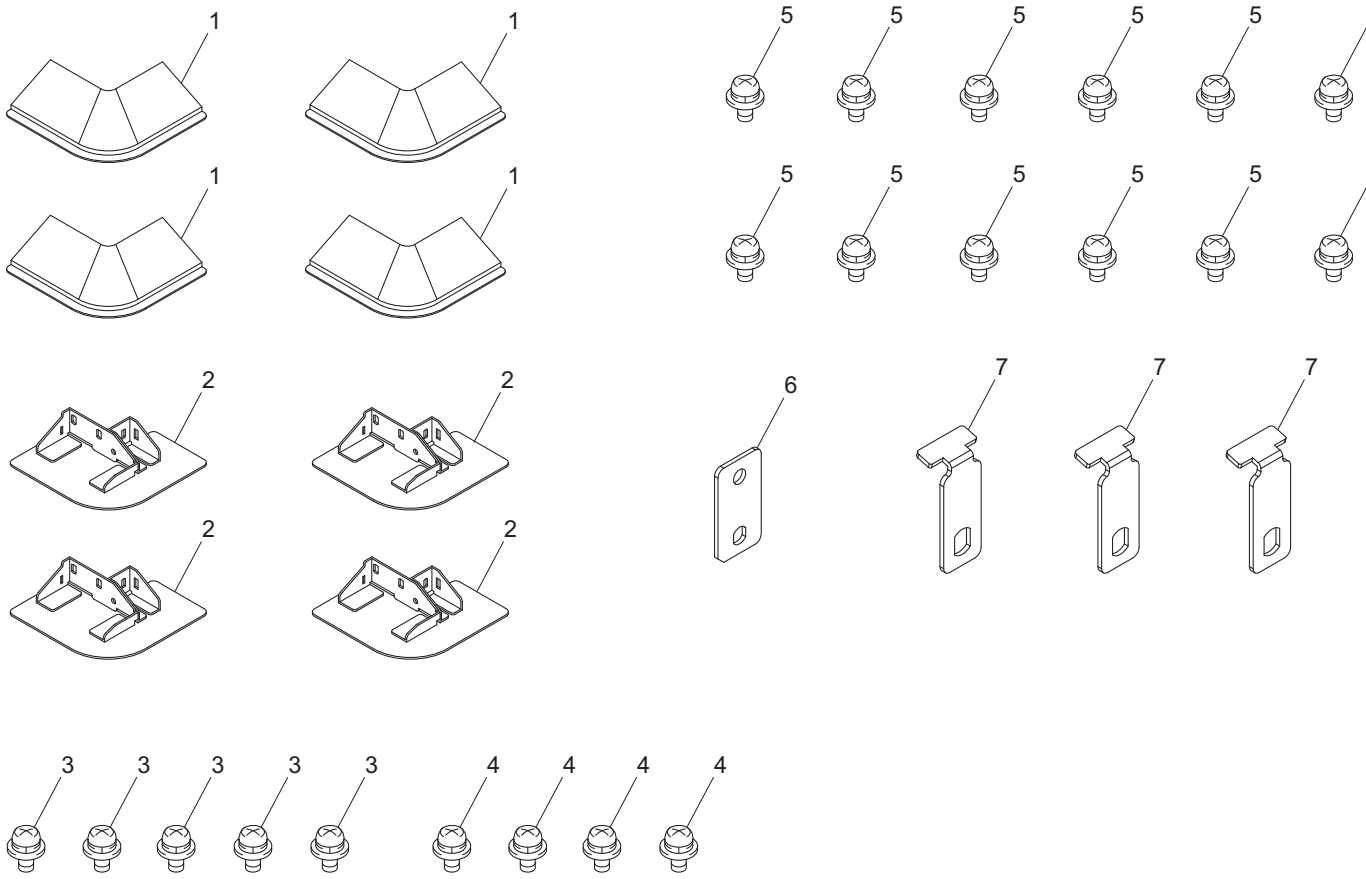

Page	Key	Parts No.	Description	Service Manual	Destinations	Class	Quantity
5	1	4348204302	Cover			C	4
5	2	4348202502	STOP PLATE			C	4
5	3	V116040804	Screw			V	5
5	4	V137040803	SCREW			V	4
5	5	V116040803	Screw			V	12
5	6	A093104001	Stop plate			C	1
5	7	A0XW608300	Connecting Plate			C	3

23.6 DESTINATION

Destination No.		Destinations		V	Hz	Model No.
A	A1	JAPAN		100	50/60	A2XM-004
	A2	JAPAN				
B		USA, CANADA		120	60	A2XM-WY4
C		EUROPEAN TYPE				
D	D1	S.E ASIA TYPE	THAILAND, SRI LANKA, SINGAPORE, MALAYSIA, HONG KONG, PAKISTAN, INDIA, BANGLADESH, INDONESIA	220-240	50/60	A2XM-WY4
	D3	OCEAINA TYPE	AUSTRALIA, NEW ZEALAND	220-240	50/60	A2XM-WY4
E		PHILIPPINES		220-240	50/60	A2XM-WY4
F	F1	SAUDI ARABIA				
	F2	SAUDI ARABIA		220-240	50/60	A2XM-WY4

Destination No.		Destinations	V	Hz	Model No.
G	G1	C.S AMERICA	220-240	50/60	A2XM-WY4
	G2	C.S AMERICA	120	60	A2XM-WY4
H		TAIWAN	110	60	A2XM-WY4
I		JORDAN, LEBANON, SYRIA, SOUTH AFRICA, IRAQ, IRAN, N.YEMEN, CAMEROON, UAE, BAHRAIN, OMAN, QATAR, KUWAIT, KENYA, TUNISIA, IVORY COAST, MOROCCO	220-240	50/60	A2XM-WY4
J		CHINA	220-240	50/60	A2XM-WY4
K		KOREA	220-240	50/60	A2XM-WY4

24. OTHER OPTION (MK-719)

24.1 MK-719

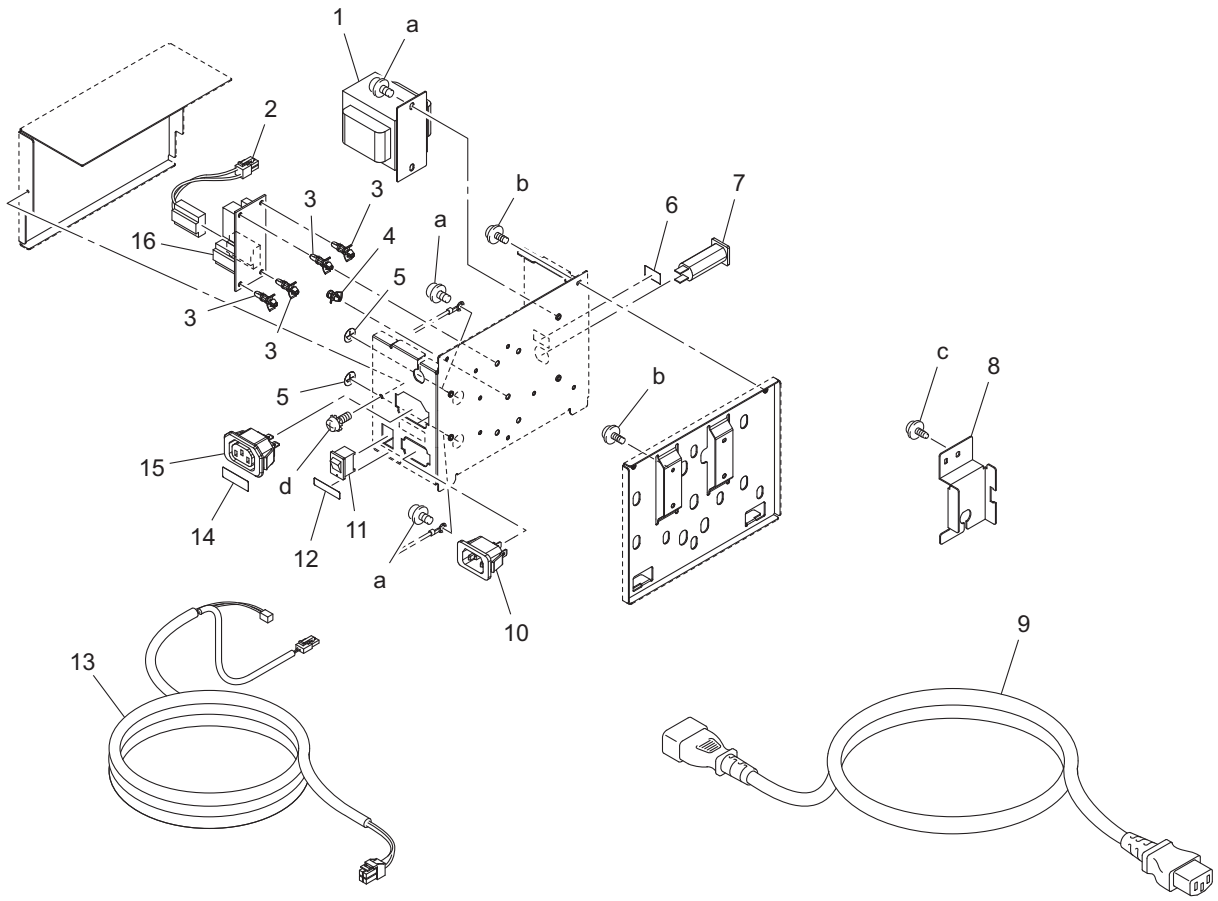

Page	Key	Parts No.	Description	Service Manual	Destinations	Class	Quantity
1	1	56AA84520	Power Source Transfomer			C	1
1	2	A0U3N10100	Heater Wiring /2			D	1
1	3	V502010032	spacer			D	4
1	4	V502010026	SUPPORT			D	1
1	5	1500232003	Label			D	2
1	6	A0U3100600	Label			D	1
1	7	A0U3M60000	Circuit breaker			D	1
1	8	A0U3100400	Bracket			D	1
1	9	A0U3N30001	Power code /100V			D	1
1	10	A0U3N10012	Heater Wiring /1			D	1
1	11	A093M60000	Rocker switch			C	1
1	12	A0U3100500	Label			D	1
1	13	A0U3N10201	Heater Wiring /3			D	1
1	14	A0U3100700	Label			D	1
1	15	A0U3N10300	Heater Wiring /4			D	1
1	16	A0U3H00100	PWB assembly (PWB-RY ASSY)			D	1
1	a	V116040803	Screw			V	
1	b	V121030804	screw			V	
1	c	V137030803	screw			V	
1	d	V120030803	screw			V	

24.2 WIRING ACCESSORIES AND JIGS

1 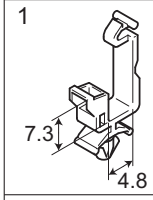							
2 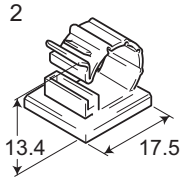							
3 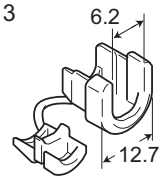							
4 							
5 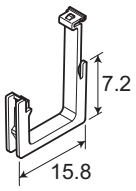							

Page	Key	Parts No.	Description	Service Manual	Destinations	Class	Quantity
2	1	V500010020	Saddle			D	
2	2	V500020012	clamp			D	
2	3	V500020071				D	
2	4	V501010001	band			D	
2	5	V570010046	SADDLE			D	

24.3 DESTINATION

Destination No.		Destinations		V	Hz	Model No.
A	A1	JAPAN		100	50/60	A0U3-001
	A2	JAPAN				
B		USA, CANADA				
C		EUROPEAN TYPE				
D	D1	S.E ASIA TYPE	THAILAND, SRI LANKA, SINGAPORE, MALAYSIA, HONG KONG, PAKISTAN, INDIA, BANGLADESH, INDONESIA			
	D3	OCEAINA TYPE	AUSTRALIA, NEW ZEALAND			
E		PHILIPPINES				
F	F1	SAUDI ARABIA				
	F2	SAUDI ARABIA				
G	G1	C.S AMERICA				
	G2	C.S AMERICA				
H		TAIWAN				

Destination No.	Destinations	V	Hz	Model No.
I	JORDAN, LEBANON, SYRIA, SOUTH AFRICA, IRAQ, IRAN, N.YEMEN, CAMEROON, UAE, BAHRAIN, OMAN, QATAR, KUWAIT, KENYA, TUNISIA, IVORY COAST, MOROCCO			
J	CHINA			
K	KOREA			

25. SORTER/FINISHER (FS-534SD)

25.1 EXTERNAL PARTS

25.1.1 P1

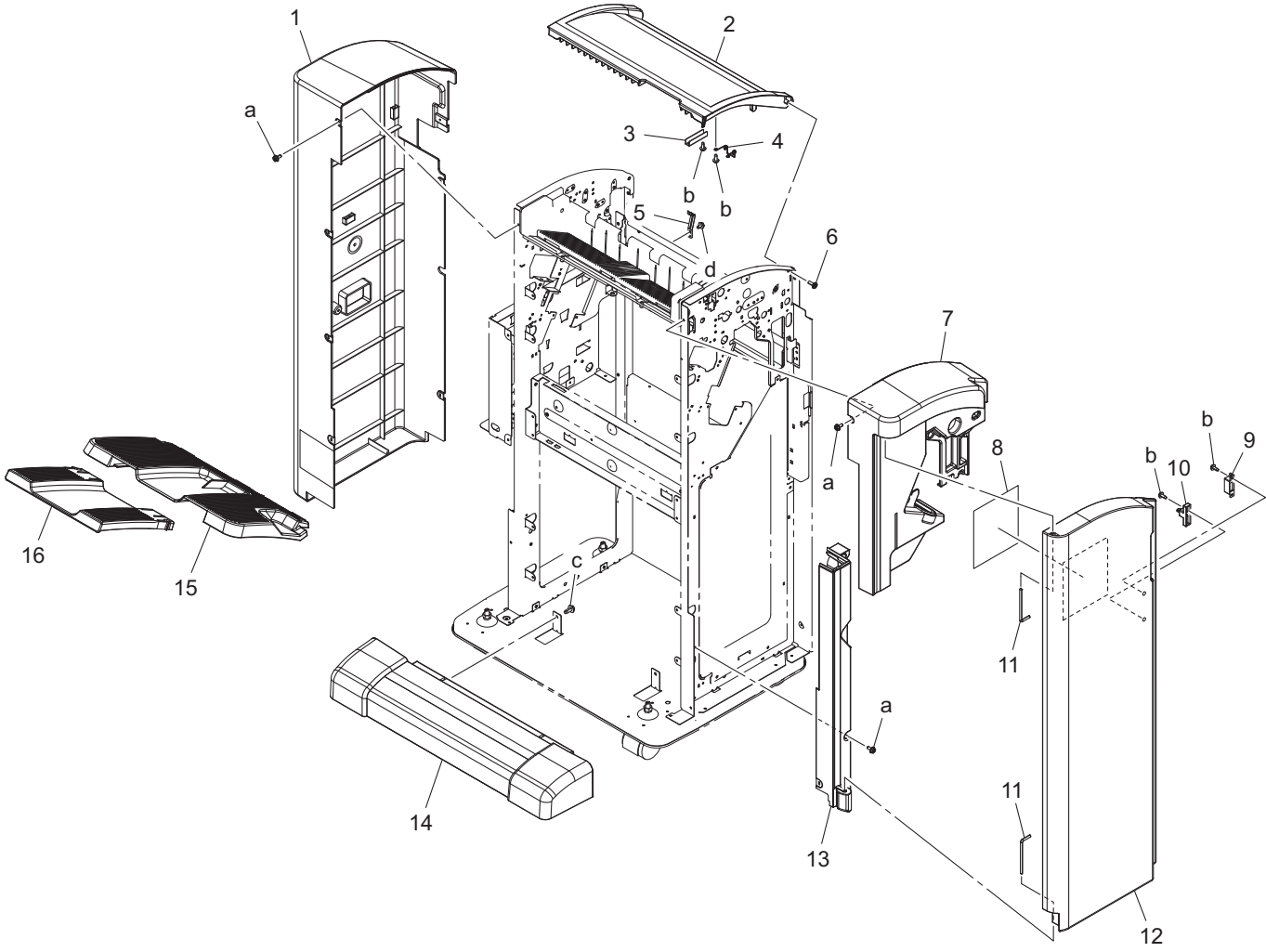

Page	Key	Parts No.	Description	Service Manual	Destinations	Class	Quantity
1	1	A3EPPP1P03	Rear Cover			C	1
1	2	A3EPPP1R02	Upper Cover			C	1
1	3	A3EPPP1S02	Bracket			D	1
1	4	A0HR172601	Torsion Coil spring			C	1
1	5	A0HR115400	Ground Plate /Lower			D	1
1	6	A3EPPP2501	Screw			D	1
1	7	A3EPPP1K02	Cover			D	1
1	8	A3EPPPBG00	Label			D	1
1	9	A3EPPPCP00	MAGNET CATCH			D	1
1	10	A3EPPP2301	Actuator			C	1
1	11	A3EPPP1N00	Shaft			D	2
1	12	A3EPPP1M03	Front Cover			C	1
1	13	A3EPPP1L02	Cover			D	1
1	14	A3EPPP1G01	Lower Cover			C	1
1	15	A3EPPP2001	Tray			C	1
1	16	A3EPPP1Y01	Tray			C	1
1	a	A3EPPPB801	Screw			D	
1	b	A3EPPPBA01	Screw			D	
1	c	A3EPPPB401	Screw			D	
1	d	V144030603	Screw			V	

25.2 FRAME SECTION

25.2.1 P2

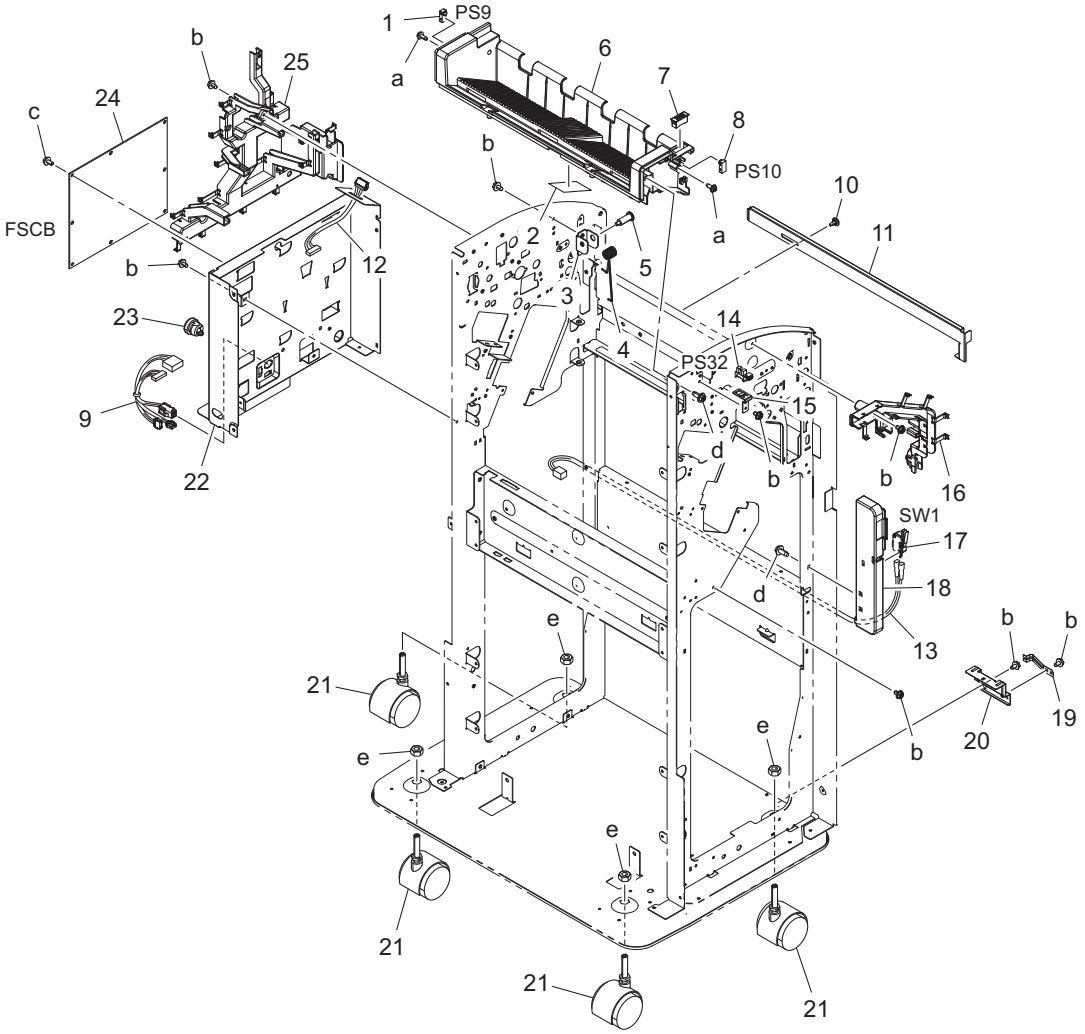

Page	Key	Parts No.	Description	Service Manual	Destinations	Class	Quantity
2	1	A3EPPP2700	Photoreflector	Sub tray full detection sensor/out (PS9)		I	1
2	2	A3EPPPBD01	Sheet			D	1
2	3	A3EPPP2N01	Bracket			D	1
2	4	A3EPPP4C01	Torsion Coil spring			C	1
2	5	A3EPPP5201	Screw			D	1
2	6	A3EPPP1F01	Cover			C	1
2	7	4030104002	CATCH			D	1
2	8	A3EPPP2600	Photoreflector	Sub tray full detection sensor/in (PS10)		I	1
2	9	A3EPPPC200	Wire Harness Assy			D	1
2	10	A092145400	Shoulder screw			C	1
2	11	A3EPPP1B01	Reinforce Plate			D	1
2	12	A3EPPPBV00	Wire Harness Assy			D	1
2	13	A3EPPPBT00	Wire Harness Assy			D	1
2	14	A108M50100	Photointerrupter	Upper cover open/close detection sensor (PS32)		B	1
2	15	A3EPPP2201	Bracket			D	1
2	16	A3EPPP1X01	Guide			C	1
2	17	9J06M60100	MICRO SWITCH	Front door open detect switch (SW1)		C	1
2	18	A3EPPP1V01	Cover			C	1
2	19	A0HR115400	Ground Plate /Lower			D	1
2	20	A0HR116000	Mounting Plate			D	1

2	21	A0HR111400	Castor			C	4
2	22	A3EPPP1J02	Bracket			D	1
2	23	A3EPPP2400	Bushing			C	1
2	24	A3EPPPBE01	Main PCB Assy	FS control board (FSCB)		I	1
2	25	A3EPPP1T01	Guide			C	1
2	a	A3EPPPBA01	Screw			D	
2	b	V144030603	Screw			V	
2	c	A3EPPPB101	Screw			D	
2	d	A3EPPPB401	Screw			D	
2	e	V195080003	Nut			V	

25.3 PAPER TRANSPORT SECTION

25.3.1 P3

P 3

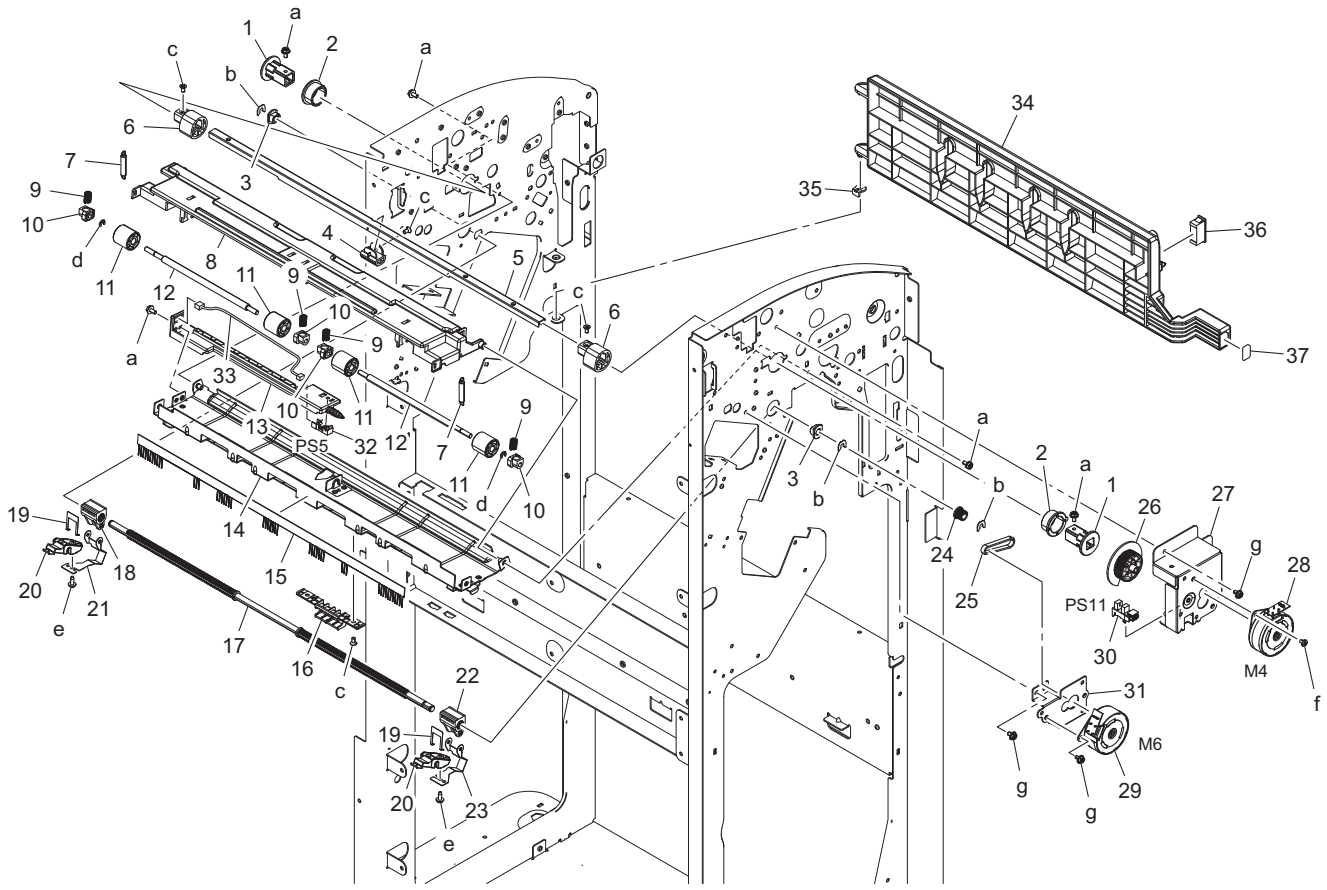

Page	Key	Parts No.	Description	Service Manual	Destinations	Class	Quantity
3	1	A3EPPP3J00	Bush			C	2
3	2	A3EPPP3F00	Bush			C	2
3	3	A3EPPP1400	Bushing			D	2
3	4	A3EPPP3M00	Cam			C	1
3	5	A3EPPP2J01	Bracket			D	1
3	6	A3EPPP3901	Cam			C	2
3	7	A3EPPP4902	Tension Spring			C	2
3	8	A3EPPP3K02	Guide			D	1
3	9	A3EPPP4701	Pressure Spring			C	4
3	10	A3EPPP1A01	Bush			C	4
3	11	A3EPPP2Q02	Roller			C	4
3	12	A3EPPP3X00	Shaft			D	2
3	13	A3EPPP3L01	Guide			D	1
3	14	A3EPPP2P01	Guide Assy			D	1
3	15	A3EPPP5402	Neutralizing Brush			C	1

3	16	A3EPPP3R01	Screw			D	1
3	17	A3EPPP4102	Shaft			D	1
3	18	A3EPPP3Q00	Nut			C	1
3	19	A3EPPP6L01	Film			C	2
3	20	A3EPPP6G00	Drum			C	2
3	21	A3EPPP6H01	Stopper			C	1
3	22	A3EPPP3P01	Nut			C	1
3	23	A3EPPP6F01	Stopper			C	1
3	24	A3EPPP3N00	Screw			D	1
3	25	A3EPPP4U00	Timing Belt			C	1
3	26	A3EPPP3201	Cam			C	1
3	27	A3EPPPCQ00	Bracket			D	1
3	28	A3EPPP5600	Motor Assy	Receving roller retraction motor (M4)		C	1
3	29	A3EPPP5500	Motor Assy	Trailing edge stopper motor (M6)		C	1
3	30	A108M50100	Photointerrupter	Tri-folding gate home sensor (PS11)		B	1
3	31	A3EPPP2M01	Bracket			D	1
3	32	A0EDM50100	Photoreflector	Paddle home sensor (PS5)		I	1
3	33	A3EPPPC500	Wire Harness Assy			D	1
3	34	A3EPPPCL00	Guide			D	1
3	35	1033440203	STOPPER RING			C	1
3	36	4030104002	CATCH			D	1
3	37	A3EPPPCK00	Label			D	1
3	a	A3EPPPB101	Screw			D	
3	b	V218040086	E ring			V	
3	c	A3EPPPAV01	Screw			D	
3	d	V217030001	E Ring			V	
3	e	A3EPPPBA01	Screw			D	
3	f	A3EPPPAY01	Screw			D	
3	g	V144030603	Screw			V	

25.3.2 P4

P 4

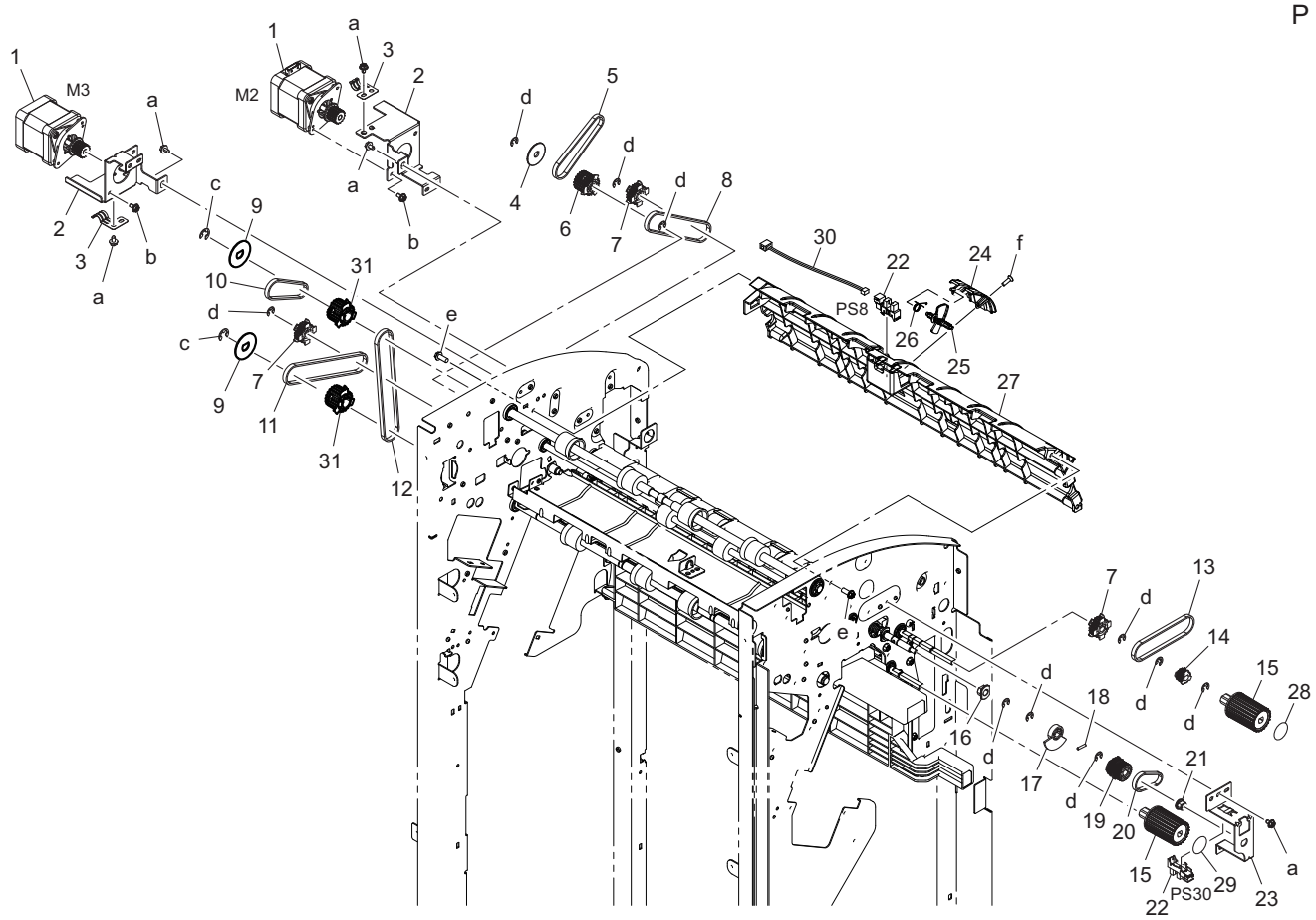

Page	Key	Parts No.	Description	Service Manual	Destinations	Class	Quantity
4	1	A3EPPP5301	Motor	FNS entry transport motor (M2) FNS discharge motor (M3)		C	2
4	2	A3EPPP2D01	Bracket			D	2
4	3	A3EPPP2C01	Plate Spring			C	2
4	4	A3EPPP3800	Flange			D	1
4	5	A3EPPP4P00	Timing Belt			C	1
4	6	A3EPPPBB00	Pulley Assy			C	1
4	7	A3EPPP2R01	Pulley			C	3
4	8	A3EPPP4M00	Timing Belt			C	1
4	9	A3EPPPDG00	Flange			D	2
4	10	A3EPPP4Q00	Timing Belt			C	1
4	11	A3EPPP4L00	Timing Belt			C	1
4	12	A3EPPP4N00	Timing Belt			C	1
4	13	A3EPPP4K00	Timing Belt			C	1
4	14	A3EPPP3C00	Pulley			C	1
4	15	A3EPPP2V01	Roller			C	2
4	16	A3EPPP1101	Bushing			D	1
4	17	A3EPPP3D01	Cam			C	1
4	18	A3EPPPAQ01	Pin			D	1
4	19	A0HR213100	Pulley 28T			C	1
4	20	A3EPPP4U00	Timing Belt			C	1
4	21	A3EPPP1001	Bushing			D	1
4	22	A108M50100	Photointerrupter	Sub tray exit sensor (PS8) Exchange folded paper output sensor(PS30)		B	2
4	23	A3EPPP2H01	Bracket			D	1
4	24	A3EPPP3B00	Cover			C	1
4	25	A3EPPP3401	Actuator			C	1

4	26	A3EPPP4600	Torsion Coil spring			C	1
4	27	A3EPPP3A01	Guide			D	1
4	28	A3EPPPBK00	Label			D	1
4	29	A3EPPPBL00	Label			D	1
4	30	A3EPPPC601	Wire Harness Assy			D	1
4	31	A3EPPPDF00	Pulley			C	2
4	a	V144030603	Screw			V	
4	b	A3EPPPB101	Screw			D	
4	c	V217060001	E Ring			V	
4	d	V217040001	E Ring			V	
4	e	A3EPPPB401	Screw			D	
4	f	A3EPPPAX01	Screw			D	

25.3.3 P5

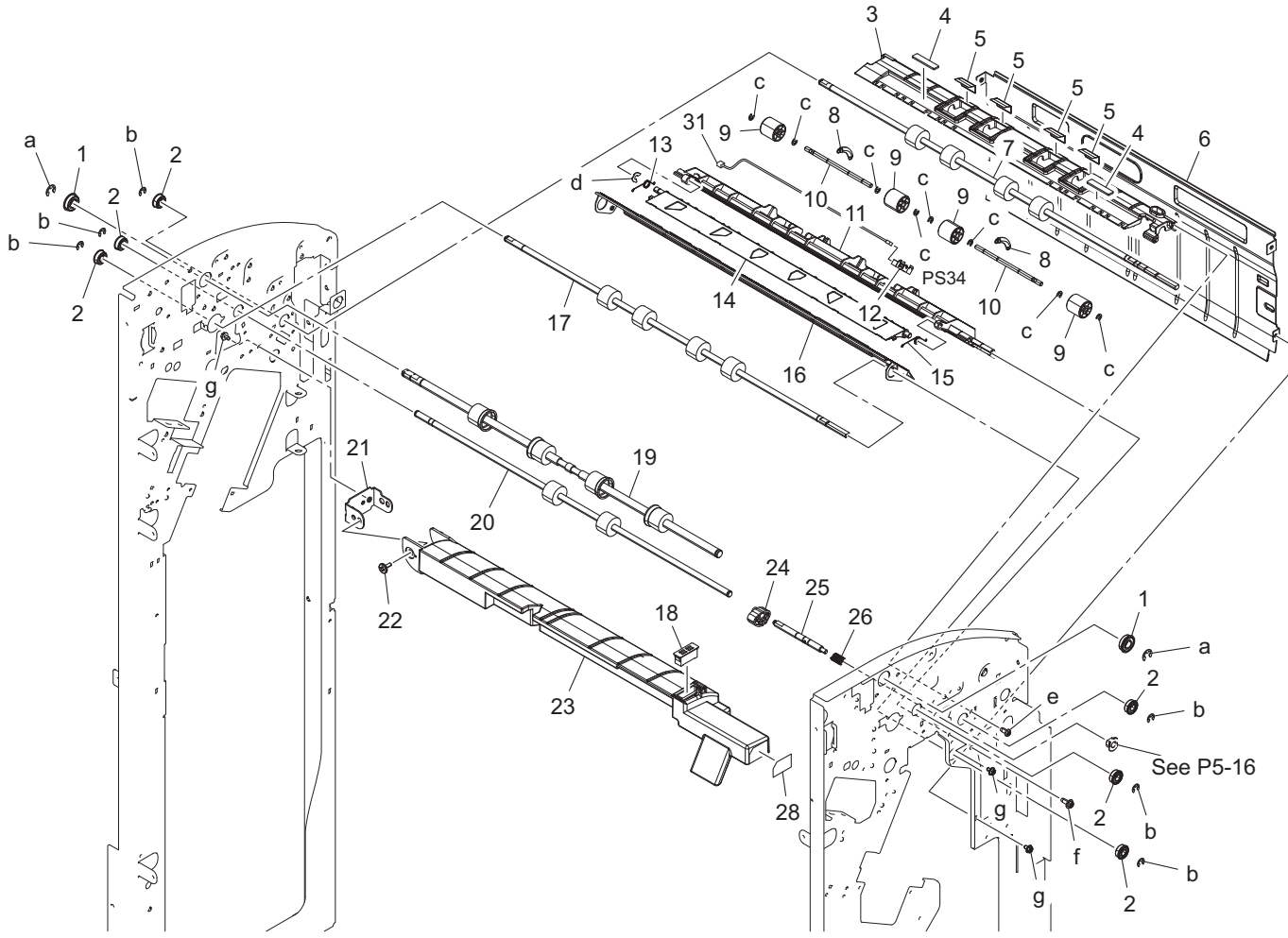

Page	Key	Parts No.	Description	Service Manual	Destinations	Class	Quantity
5	1	A1RF529300	Ball bearing			C	2
5	2	A3EPPP1501	Ball Bearing			C	6
5	3	A3EPPP2X01	Guide			D	1
5	4	A3EPPP4V00	Sponge			C	2
5	5	A3EPPP4S01	Film			C	4
5	6	A3EPPP2B01	Guide			D	1
5	7	A3EPPP4F02	Roller			C	1
5	8	A3EPPP4302	Tension Spring			C	2
5	9	A3EPPP3702	Roll			C	4
5	10	A3EPPP3T00	Shaft			D	2
5	11	A3EPPP2T01	Guide			D	1

5	12	A0EDM50100	Photoreflector			I	1
5	13	A3EPPP4400	Torsion Coil spring			C	1
5	14	A3EPPP2U01	Guide Plate			C	1
5	15	A3EPPP4800	Torsion Coil spring			C	1
5	16	A3EPPP2F01	Guide			D	1
5	17	A3EPPP4E02	Roller			C	1
5	18	4030104002	CATCH			D	1
5	19	A3EPPP4J04	Roller			C	1
5	20	A3EPPP4G02	Roller			C	1
5	21	A3EPPP2K01	Hinge			D	1
5	22	A3EPPP5001	Screw			D	1
5	23	A3EPPP3500	Guide			D	1
5	24	A3EPPP3001	Cam			C	1
5	25	A3EPPP3V01	Shaft			D	1
5	26	A3EPPP4B00	Pressure Spring			C	1
5	28	A3EPPPBH00	Label			D	1
5	31	A3EPPPC401	Wire Harness Assy			D	1
5	a	V217060001	E Ring			V	
5	b	V217040001	E Ring			V	
5	c	V217030001	E Ring			V	
5	d	V218040086	E ring			V	
5	e	A3EPPPAU01	Screw			D	
5	f	A3EPPPB401	Screw			D	
5	g	V144030603	Screw			V	

25.3.4 P6

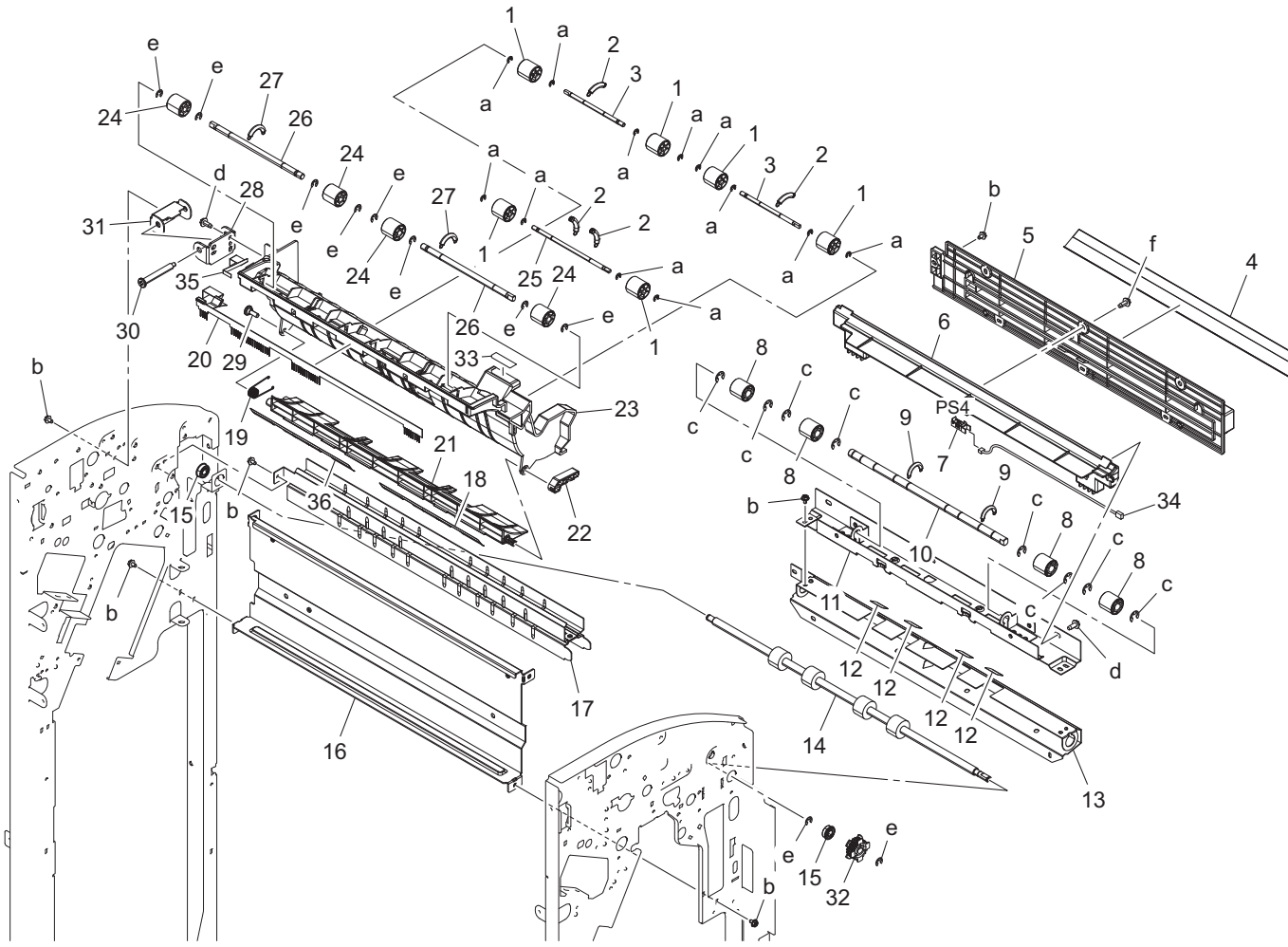

Page	Key	Parts No.	Description	Service Manual	Destinations	Class	Quantity
6	1	A3EPPP3702	Roll			C	6
6	2	A3EPPP4302	Tension Spring			C	4
6	3	A3EPPP4000	Shaft			D	2
6	4	A3EPPP4R01	Film			C	1
6	5	A3EPPP3E01	Guide			D	1
6	6	A3EPPP3G03	Guide			D	1
6	7	A0EDM50100	Photoreflector			I	1
6	8	A3EPPP3H01	Roller			C	4
6	9	A3EPPP4202	Tension Spring			C	2
6	10	A3EPPP3S00	Shaft			D	1
6	11	A3EPPP2901	Guide Assy			D	1
6	12	A3EPPP4X01	Film			C	4
6	13	A3EPPP2801	Guide			D	1
6	14	A3EPPP4D02	Roller			C	1
6	15	A3EPPP1501	Ball Bearing			C	2
6	16	A3EPPP1E01	Reinforce Stay			D	1
6	17	A3EPPP2A02	Guide Assy			D	1
6	18	A3EPPP4T02	Film			C	1
6	19	A3EPPP4501	Torsion Coil spring			C	1
6	20	A3EPPP5701	Neutralizing Brush			C	1
6	21	A3EPPP2Y02	Guide Plate			C	1
6	22	A3EPPP3101	Lever			C	1
6	23	A3EPPP3302	Guide			D	1
6	24	A3EPPP3603	Roller			C	4
6	25	A3EPPP3U00	Shaft			D	1
6	26	A3EPPP3Y00	Shaft			D	2
6	27	A3EPPP4A02	Tension Spring			C	2
6	28	A3EPPP2E01	Bracket			D	1
6	29	A3EPPP4Y01	Screw			D	1
6	30	A3EPPP5101	Screw			D	1
6	31	A3EPPP2L01	Bracket			D	1
6	32	A3EPPP2R01	Pulley			C	1
6	33	A3EPPPBJ00	Label			D	1
6	34	A3EPPPC300	Wire Harness Assy			D	1
6	35	A3EPPPD500	Seal			C	1
6	36	A3EPPPD900	Film			D	1
6	a	V217030001	E Ring			V	
6	b	V144030603	Screw			V	
6	c	V217060001	E Ring			V	
6	d	A3EPPPB401	Screw			D	
6	e	V217040001	E Ring			V	
6	f	A3EPPPCN00	Screw			D	

25.4 ELEVATE SECTION

25.4.1 P7

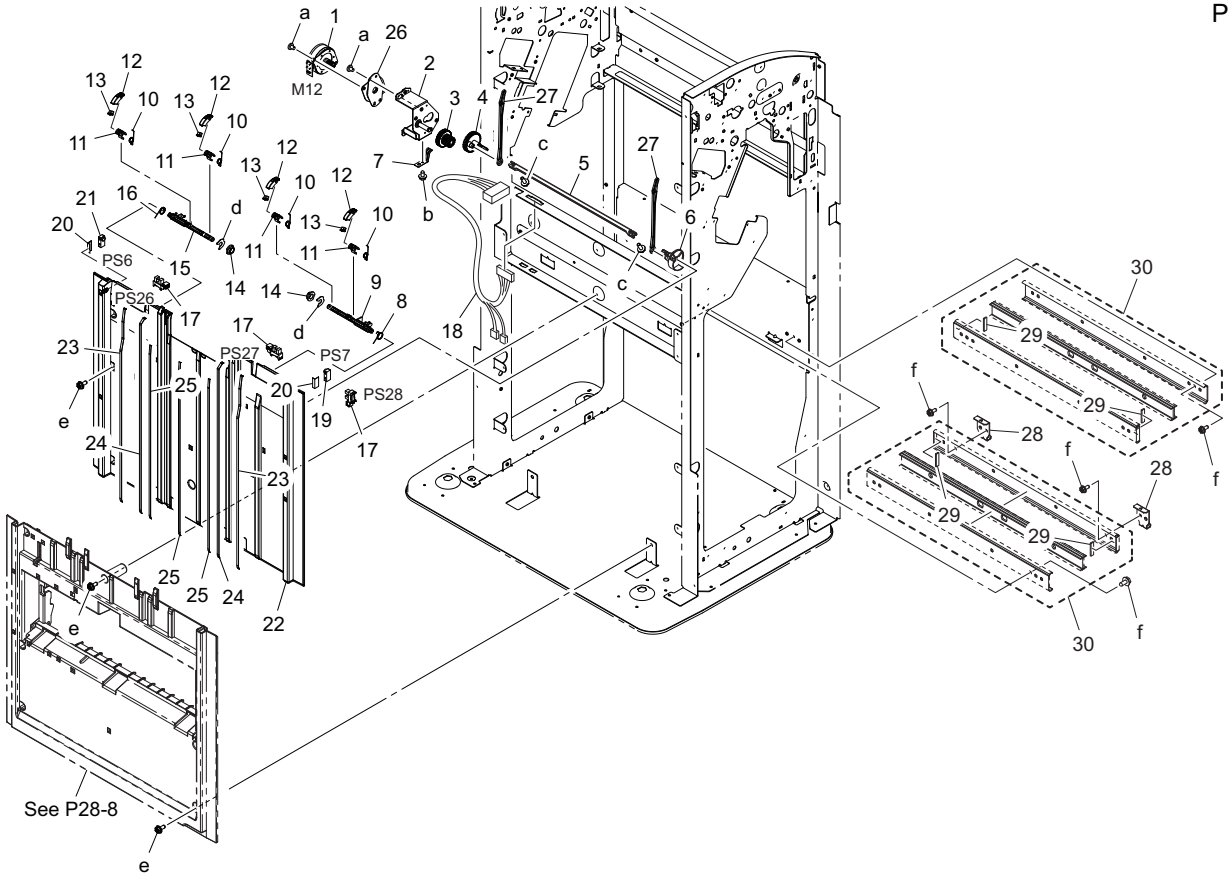

Page	Key	Parts No.	Description	Service Manual	Destinations	Class	Quantity
7	1	A3EPPPAA00	Motor	Paper receiving control motor (M12)		C	1
7	2	A3EPPPCY00	Mounting Plate			D	1
7	3	A3EPPPAD00	Gear			C	1
7	4	A3EPPPA401	Gear			C	1
7	5	A3EPPP9S02	Shaft			D	1
7	6	A3EPPPAC01	Actuator			C	1
7	7	A3EPPPA901	Plate Spring			D	1
7	8	A3EPPP9Y01	Torsion Spring			C	1
7	9	A3EPPPA302	Actuator			C	1
7	10	A3EPPP9X01	Torsion Spring			C	4
7	11	A3EPPPA101	Holder			C	4
7	12	A3EPPP9Q01	Holder			C	4
7	13	A3EPPP9T01	Cushion			C	4
7	14	A3EPPP1300	Bushing			D	2
7	15	A3EPPPA202	Actuator			C	1
7	16	A3EPPPA602	Torsion Spring			C	1
7	17	A108M50100	Photointerrupter	Main tray upper position sensor/R (PS26) Main tray upper position sensor/F (PS27) Paper delivery control sensor (PS28)		B	3
7	18	A3EPPPC100	Wire Harness Assy			D	1
7	19	A3EPPP2600	Photoreflector	Main tray upper sensor/in (PS7)		I	1
7	20	A3EPPPAH00	Seal			C	2
7	21	A3EPPP2700	Photoreflector	Main tray upper sensor/out (PS6)		I	1
7	22	A3EPPP9503	Cover			D	1
7	23	A3EPPPAG01	Slide Part			C	2

7	24	A3EPPPAF01	Slide Part			C	2
7	25	A3EPPPAE01	Slide Part			C	3
7	26	A3EPPPAB01	Vibrating Plate			D	1
7	27	A3EPPP9R01	Arm			C	2
7	28	A3ERPP1501	Mounting Plate			D	2
7	29	A3ERPP8100	Cushion			D	4
7	30	A3ERPP1Q00	Rail			C	2
7	a	A3EPPPAY01	Screw			D	
7	b	V144030603	Screw			V	
7	c	A3EPPPB201	Screw			D	
7	d	V217040001	E Ring			V	
7	e	A3EPPPB801	Screw			D	
7	f	A3ERPP6K01	Screw			D	

25.4.2 P8

P 8

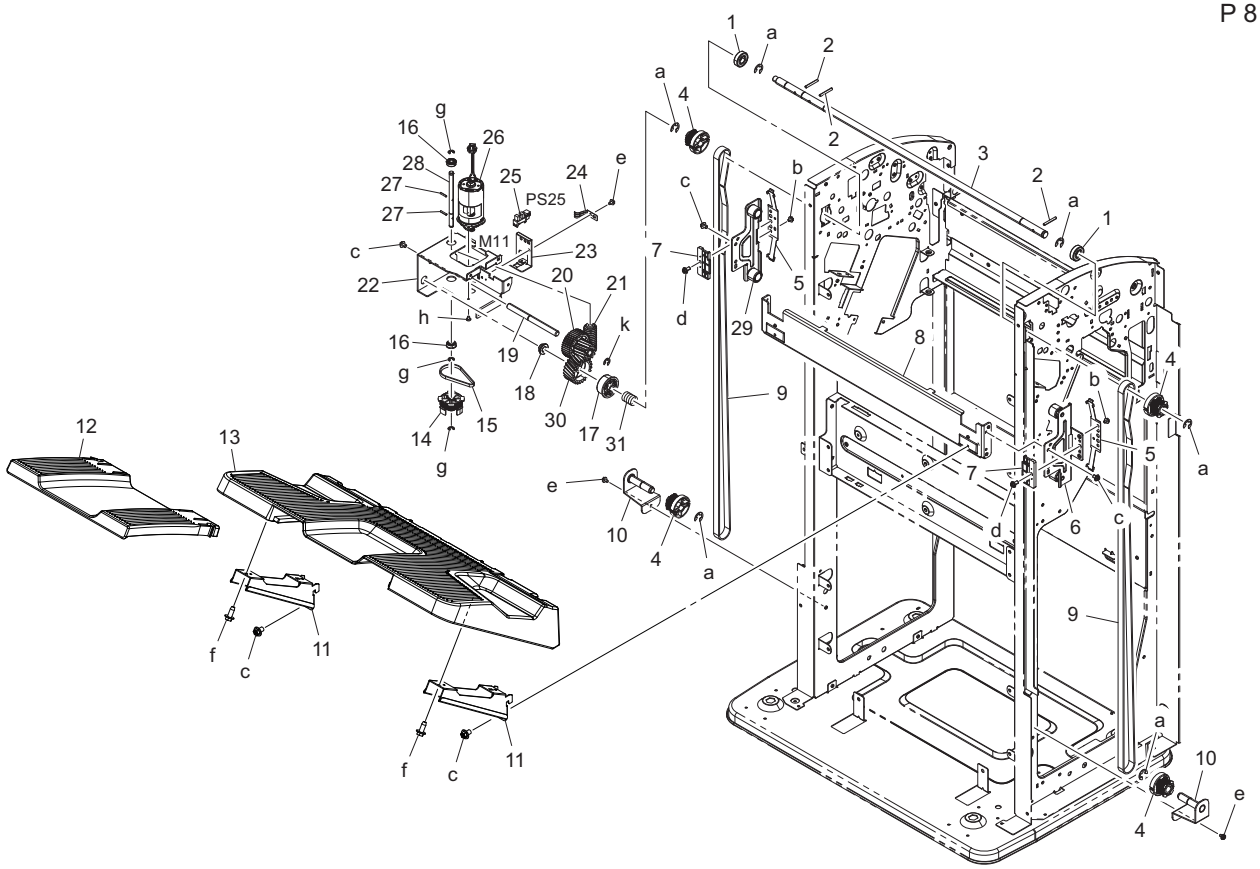

Page	Key	Parts No.	Description	Service Manual	Destinations	Class	Quantity
8	1	A3EPPPCF01	Ball Bearing			C	2
8	2	A3EPPPAS01	Pin			D	3
8	3	A3EPPP9B00	Shaft			D	1
8	4	A3EPPP9C00	Gear			C	4
8	5	A3EPPPA001	Plate Spring			D	2
8	6	A3EPPPD100	Support Plate Assy			D	1
8	7	A3EPPP9N01	Holder			D	2
8	8	A3EPPP9601	Mounting Plate			D	1
8	9	A3EPPP9900	Timing Belt			C	2
8	10	A3EPPPD000	Support Plate			D	2
8	11	A3EPPP9A01	Frame			D	2
8	12	A3EPPP1Y01	Tray			C	1
8	13	A3EPPP9P01	Tray			C	1
8	14	A3EPPP9L02	Pulley			C	1
8	15	A3EPPPBP00	Timing Belt			C	1

8	16	A3EPPP1501	Ball Bearing			C	2
8	17	A3EPPP9E00	Ratchet			C	1
8	18	A3EPPP1201	Bushing			D	1
8	19	A3EPPP9G00	Shaft			D	1
8	20	A3EPPP9H03	Gear			C	1
8	21	A3EPPP9J01	Worm Gear			C	1
8	22	A3EPPP9F03	Mounting Plate			D	1
8	23	A3EPPP9M01	Mounting Plate			D	1
8	24	A3EPPPA901	Plate Spring			D	1
8	25	A108M50100	Photointerrupter	Stacker motor sensor (PS25)		B	1
8	26	A3EPPPA702	Motor	Main tray up/down motor (M11)		C	1
8	27	A3EPPPAR01	Pin			D	2
8	28	A3EPPP9K00	Shaft			D	1
8	29	A3EPPPD200	Support Plate Assy			D	1
8	30	A3EPPP9D01	Gear			C	1
8	31	A3EPPPBR01	Pressure Spring			C	1
8	a	V217080001	E ring			V	
8	b	A3EPPPBN01	Screw			D	
8	c	A3EPPPBQ01	Screw			D	
8	d	A3EPPPCJ01	Screw			D	
8	e	V144030603	Screw			V	
8	f	A3EPPPB401	Screw			D	
8	g	V217040001	E Ring			V	
8	h	A3EPPPAY01	Screw			D	
8	k	V217060001	E Ring			V	

25.5 STAPLER SECTION

P 9

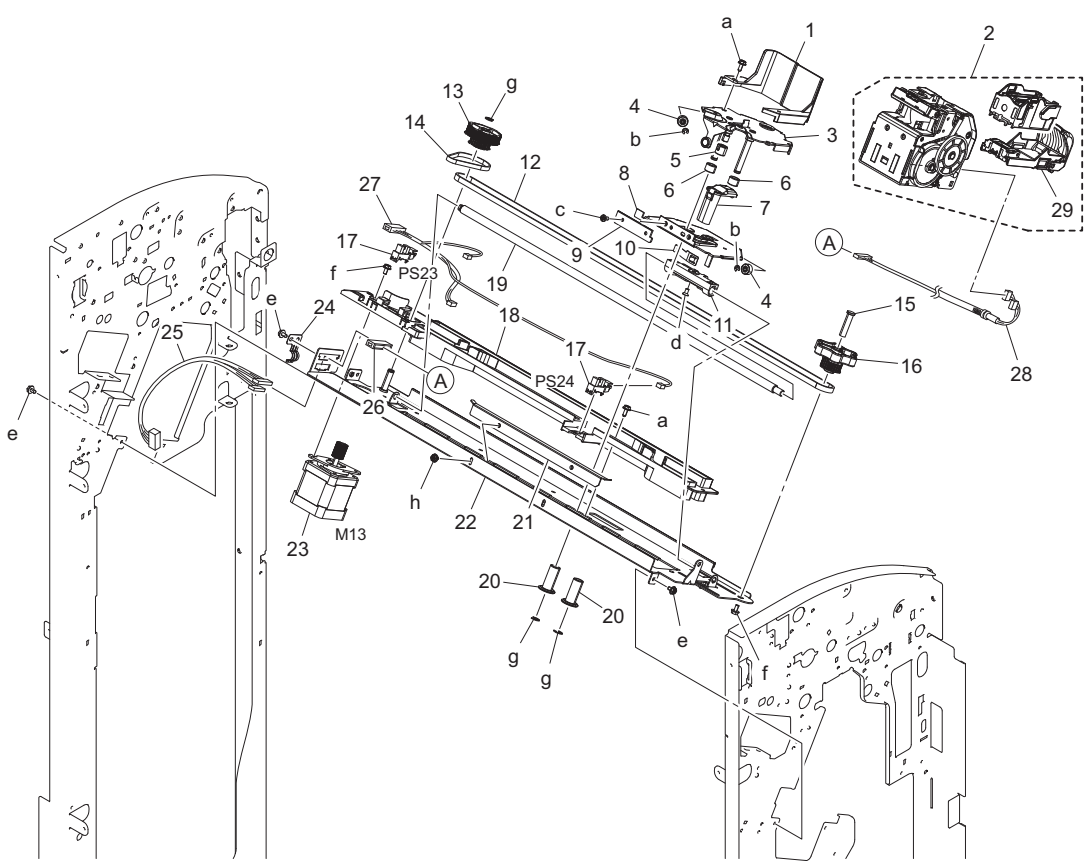

25.5.1 P9

Page	Key	Parts No.	Description	Service Manual	Destinations	Class	Quantity
9	1	A3EPPP8Y01	Holder			D	1

9	2	9J08560101	STAPLER UNIT			C	1
9	3	A3EPPP8K02	Mounting Plate			D	1
9	4	A3EPPP9001	Roll			C	2
9	5	A3EPPP8L00	Collar			C	1
9	6	A3EPPP8N01	Roll			C	2
9	7	A3EPPP8P01	Holder			D	1
9	8	A3EPPP8J01	Mounting Plate			D	1
9	9	A3EPPP9301	Guide			D	1
9	10	A3EPPP8R01	Plate Spring			D	1
9	11	A3EPPP8Q01	Holder			D	1
9	12	A3EPPP8S00	Timing Belt			C	1
9	13	A3EPPP8V01	Gear			C	1
9	14	A3EPPP8T00	Timing Belt			C	1
9	15	A3EPPP9200	Shaft			D	1
9	16	A3EPPP8X02	Knob			C	1
9	17	A108M50100	Photointerrupter	Stapler home position sensor (Rear) (PS23) Stapler position sensor (Center) (PS24)		B	2
9	18	A3EPPP8H03	Holder			D	1
9	19	A3EPPP8U00	Shaft			D	1
9	20	A3EPPP8M03	Shaft			D	2
9	21	A3EPPP9402	Plate			D	1
9	22	A3EPPPCX00	Mounting Plate			D	1
9	23	A3EPPP9102	Motor	Side stapler movement motor (M13)		C	1
9	24	A3EPPP2C01	Plate Spring			C	1
9	25	A3EPPPBY00	Wire Harness Assy			D	1
9	26	A3EPPPCB00	Wire Harness Assy			D	1
9	27	A3EPPPCA01	Wire Harness Assy			D	1
9	28	A3EPPPCC01	Wire Harness Assy			D	1
9	29	9J08P00100	STAPLE CARTRIDGE			C	1
9	a	A3EPPPB701	Screw			D	
9	b	V217025001	E ring			V	
9	c	A3EPPPB001	Screw			D	
9	d	A3EPPPAV01	Screw			D	
9	e	V144030603	Screw			V	
9	f	A3EPPPB101	Screw			D	
9	g	V217040001	E Ring			V	
9	h	A3EPPPBN01	Screw			D	

25.6 PAPER EXIT SECTION

25.6.1 P10

P 10

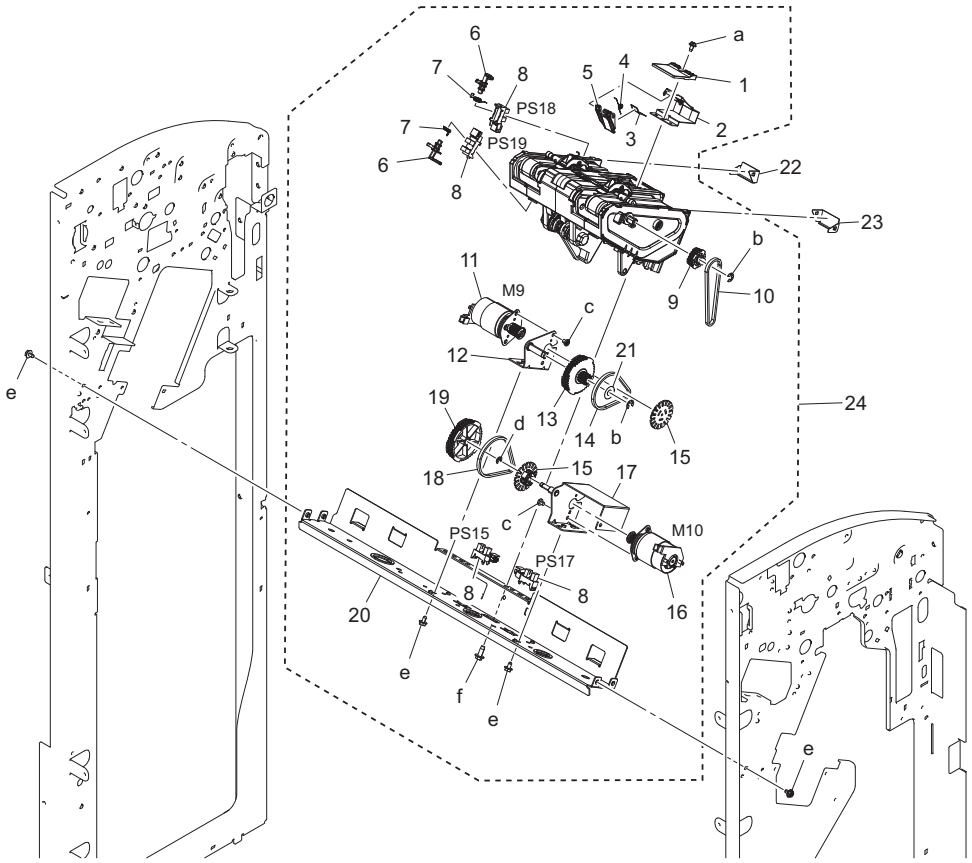

Page	Key	Parts No.	Description	Service Manual	Destinations	Class	Quantity
10	1	A3EPPP6T01	Cover			C	1
10	2	A3EPPP6S01	Bracket			C	1
10	3	A3EPPP8501	Film			C	1
10	4	A3EPPP8400	Torsion Coil spring			C	1
10	5	A3EPPP8202	Lever			C	1
10	6	A3EPPP7P01	Actuator			C	2
10	7	A3EPPP7X01	Torsion Coil spring			C	2
10	8	A108M50100	Photointerrupter	Pre-eject encorder sensor (PS15) Gripper motor sensor (PS17) Gripper home position sensor (PS18) Gripper position detection sensor (PS19)		B	4
10	9	A3EPPP7Y01	Pulley			C	1
10	10	A3EPPP7S00	Timing Belt			C	1
10	11	A3EPPP8F00	Motor	Pre-eject drive motor (M9)		C	1
10	12	A3EPPPCV00	Bracket			D	1
10	13	A3EPPP7503	Pulley			C	1
10	14	A3EPPP7600	Timing Belt			C	1
10	15	A3EPPP7402	Detecting Plate			C	2
10	16	A3EPPP8E00	Motor Assy	Bundle eject motor (M10)		C	1
10	17	A3EPPP7R01	Bracket			D	1
10	18	A3EPPP8000	Timing Belt			C	1
10	19	A3EPPP8102	Pulley			C	1
10	20	A3EPPP7T02	Frame			D	1
10	21	A3EPPPD600	Flange			C	1
10	22	A3EPPPDC00	Holder/REAR			D	1
10	23	A3EPPPDD00	Holder/Front			D	1
10	24	A3EPPPDE00	Ejector Unit			S	1

10	a	A3EPPPB901	Screw			D	
10	b	V217040001	E Ring			V	
10	c	A3EPPPAY01	Screw			D	
10	d	V217030001	E Ring			V	
10	e	V144030603	Screw			V	
10	f	A3EPPPB401	Screw			D	

25.6.2 P11

P 11

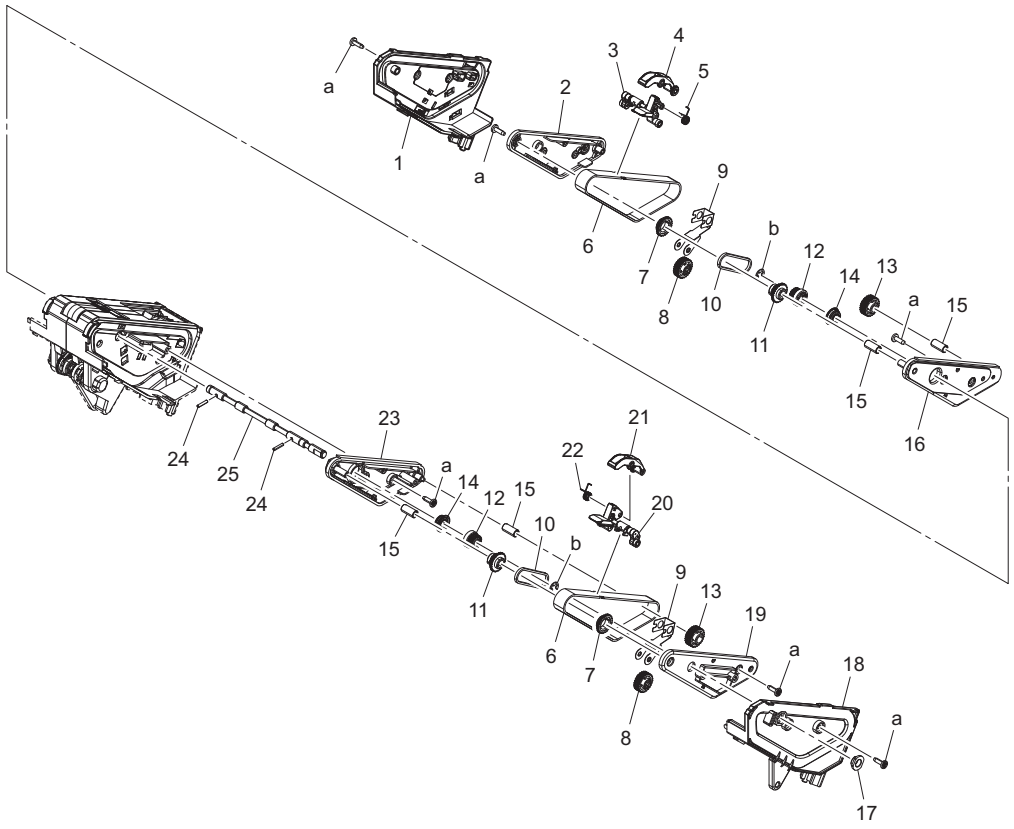

Page	Key	Parts No.	Description	Service Manual	Destinations	Class	Quantity
11	1	A3EPPP7N04	Frame			D	1
11	2	A3EPPP7K00	Frame			D	1
11	3	A3EPPPAJ00	Holder Assy			C	1
11	4	A3EPPPAN00	Arm			C	1
11	5	A3EPPP7V01	Torsion Coil spring			C	1
11	6	A3EPPP7H00	Timing Belt			C	2
11	7	A3EPPP7A01	Pulley			C	2
11	8	A3EPPP7G00	Pulley			C	2
11	9	A3EPPP7F01	Bracket			D	2
11	10	A3EPPP7E00	Timing Belt			C	2
11	11	A3EPPP7B03	Pulley			C	2
11	12	A3EPPP7C02	Pulley			C	2
11	13	A3EPPP7D00	Pulley			C	2
11	14	A3EPPPAT00	Ball Bearing			C	2
11	15	A3EPPP7900	Shaft			C	4
11	16	A3EPPP7802	Frame			D	1
11	17	A3EPPP1300	Bushing			D	1
11	18	A3EPPP7M03	Frame			D	1
11	19	A3EPPP7J01	Frame			D	1
11	20	A3EPPPAK00	Belt Assy			C	1
11	21	A3EPPPAP00	Arm			C	1
11	22	A3EPPP7U01	Torsion Coil spring			C	1

11	23	A3EPPP7701	Frame			D	1
11	24	A3EPPPAQ01	Pin			D	2
11	25	A3EPPP7L02	Shaft			D	1
11	a	A3EPPPB501	Screw			D	
11	b	V217040001	E Ring			V	

25.6.3 P12

P 12

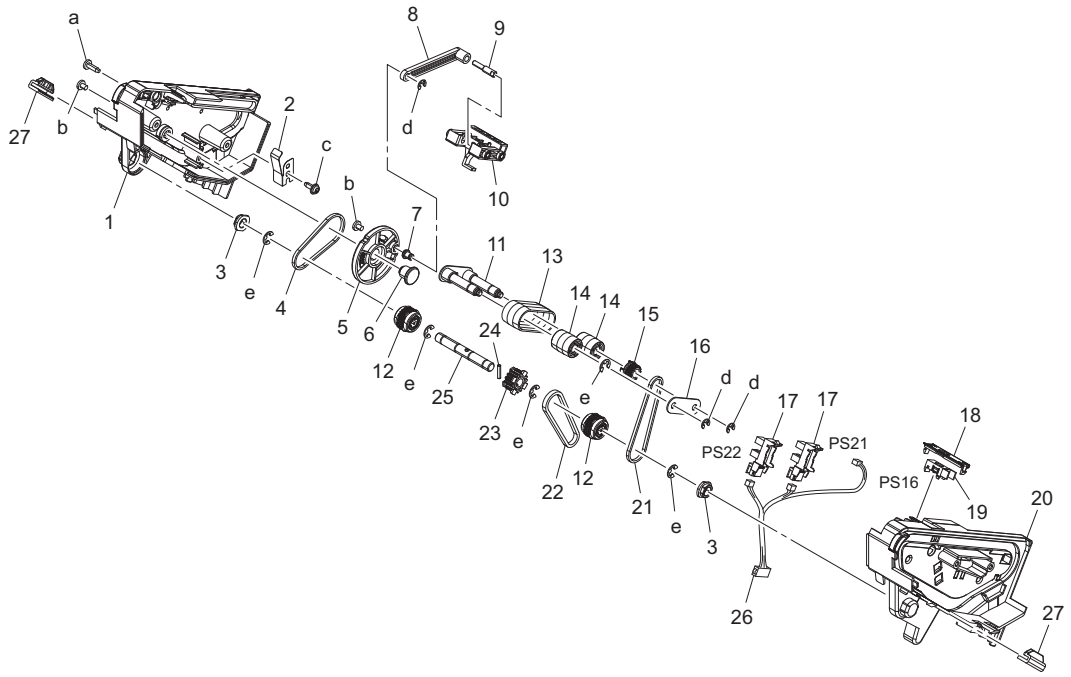

Page	Key	Parts No.	Description	Service Manual	Destinations	Class	Quantity
12	1	A3EPPP7303	Frame			D	1
12	2	A3EPPP8301	Plate Spring			C	1
12	3	A3EPPP1300	Bushing			D	2
12	4	A3EPPP8A00	Timing Belt			C	1
12	5	A3EPPP6U01	Pulley			C	1
12	6	A3EPPP6X00	Pin			D	1
12	7	A3EPPP6V01	Hinge			D	1
12	8	A3EPPP6R01	Arm			C	1
12	9	A3EPPP6Q00	Pin			C	1
12	10	A3EPPPAM00	Drum			C	1
12	11	A3EPPP8D01	Adjusting Plate Assy			D	1
12	12	A3EPPPAL00	Pulley			C	2
12	13	A3EPPP8701	Belt			C	1
12	14	A3EPPP8601	Roll			C	2
12	15	A3EPPP8900	Pulley			C	1
12	16	A3EPPP8802	Bracket			D	1
12	17	A108M50100	Photointerrupter	Pre-eject home sensor (PS21) Pre-eject away sensor (PS22)		B	2
12	18	A3EPPP8C01	Cover			C	1
12	19	A0EDM50100	Photoreflector	Main tray exit sensor (PS16)		I	1
12	20	A3EPPP7202	Frame			D	1
12	21	A3EPPP8B00	Timing Belt			C	1
12	22	A3EPPP7100	Timing Belt			C	1

12	23	A3EPPP7002	Pulley			C	1
12	24	A3EPPPAQ01	Pin			D	1
12	25	A3EPPP6Y01	Shaft			D	1
12	26	A3EPPPC801	Wire Harness Assy			D	1
12	27	A3EPPPD800	Guide			D	2
12	a	A3EPPPB501	Screw			D	
12	b	A3EPPPAY01	Screw			D	
12	c	A3EPPPBA01	Screw			D	
12	d	V217030001	E Ring			V	
12	e	V217040001	E Ring			V	

25.7 COMPILE SECTION

25.7.1 P13

P 13

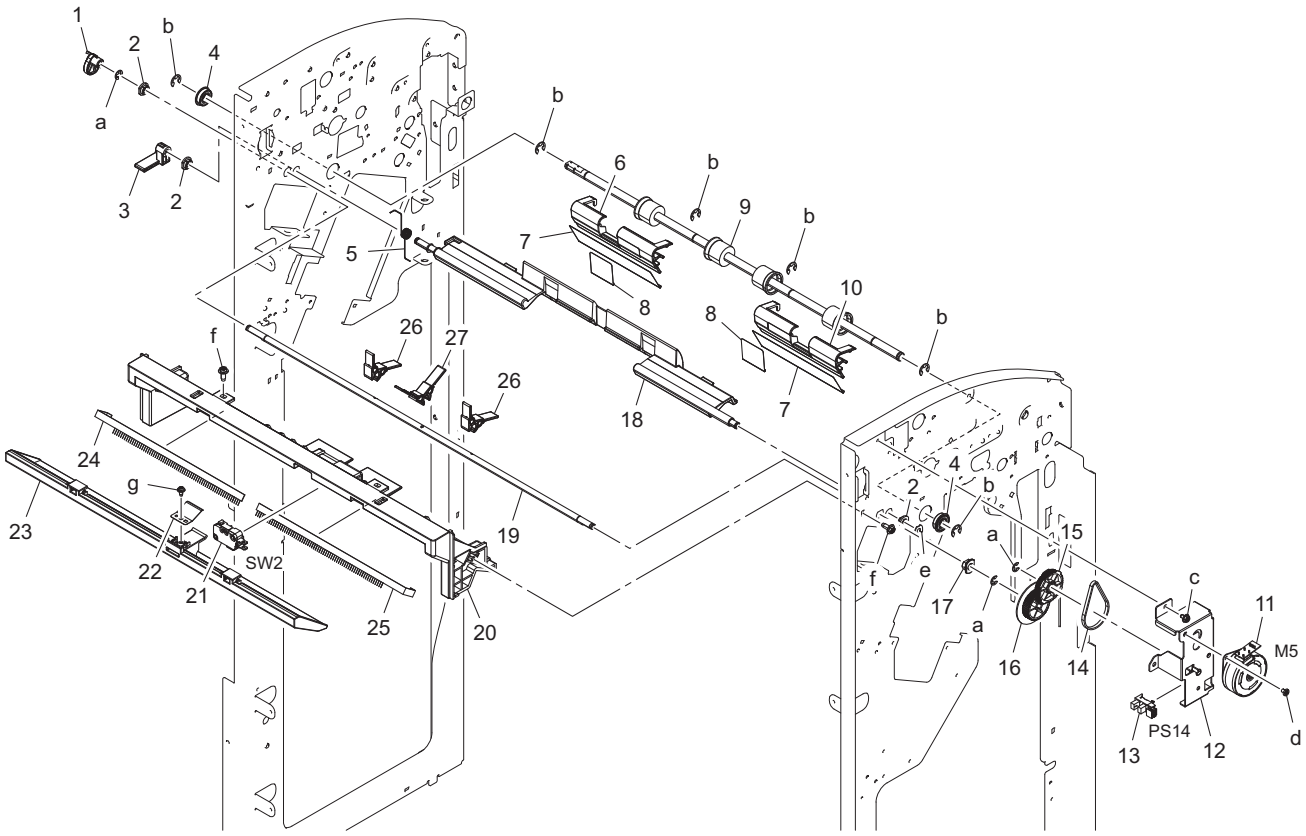

Page	Key	Parts No.	Description	Service Manual	Destinations	Class	Quantity
13	1	A3EPPP5E01	Cam			C	1
13	2	A3EPPP1300	Bushing			D	3
13	3	A3EPPP5G01	Actuator			C	1
13	4	A1RF529300	Ball bearing			C	2
13	5	A3EPPP6000	Torsion Coil spring			C	1
13	6	A3EPPP6B01	Guide Plate			C	1
13	7	A3EPPP6M01	Film			C	2
13	8	A3EPPP6K01	Film			C	2
13	9	A3EPPP4H04	Roller			C	1
13	10	A3EPPP6A01	Guide Plate			C	1
13	11	A3EPPP5500	Motor Assy	FNS paddle motor (M5)		C	1
13	12	A3EPPPCS00	Bracket			D	1
13	13	A108M50100	Photointerrupter	Upper paddle home position detection sensor (PS14)		B	1
13	14	A3EPPP5H00	Timing Belt			C	1

13	15	A3EPPP6C02	Gear			C	1
13	16	A3EPPP5B00	Gear			C	1
13	17	A3EPPP1101	Bushing			D	1
13	18	A3EPPP5F02	Guide Plate			D	1
13	19	A3EPPP5801	Shaft			D	1
13	20	A3EPPP5J02	Guide Plate			C	1
13	21	A3EPPPCR00	Micro Switch	Main tray upper position detect switch (SW2)		C	1
13	22	A3EPPP6902	Plate Spring			C	1
13	23	A3EPPP6801	Guide			D	1
13	24	A3EPPP6N01	Neutralizing Brush			C	1
13	25	A3EPPP6P01	Neutralizing Brush			C	1
13	26	A3EPPPD300	Paddle Assy			C	2
13	27	A3EPPPD400	Paddle Assy			C	1
13	a	V217040001	E Ring			V	
13	b	V217060001	E Ring			V	
13	c	V144030603	Screw			V	
13	d	A3EPPPAY01	Screw			D	
13	e	V218040086	E ring			V	
13	f	A3EPPPB401	Screw			D	
13	g	A3EPPPB901	Screw			D	

25.7.2 P14

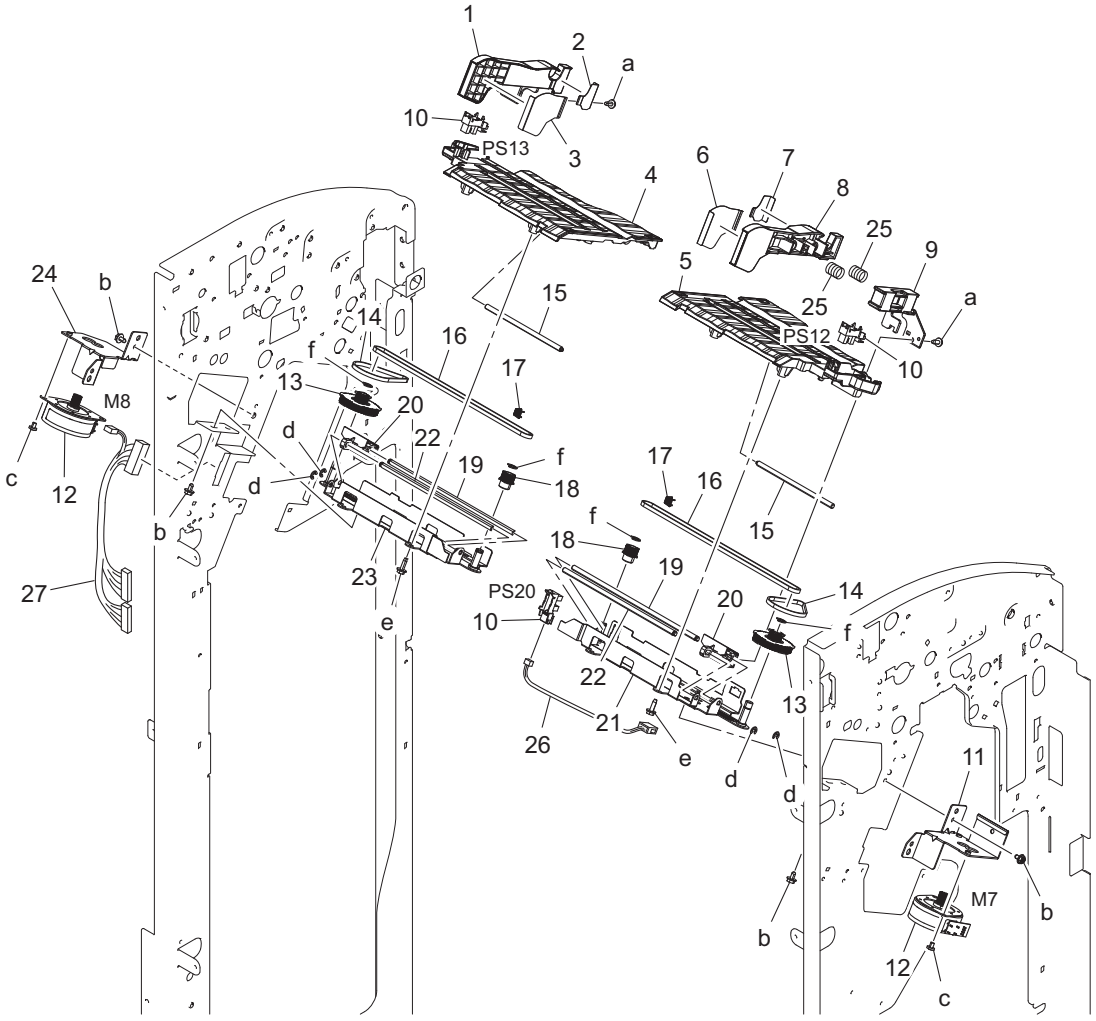

Page	Key	Parts No.	Description	Service Manual	Destinations	Class	Quantity
14	1	A3EPPP6301	Regulating Plate			C	1
14	2	A3EPPP6501	Reinforce Plate			C	1

14	3	A3EPPP6401	Reinforce Plate			C	1
14	4	A3EPPP6201	Cover			C	1
14	5	A3EPPP5U01	Cover			C	1
14	6	A3EPPP5V01	Reinforce Plate			C	1
14	7	A3EPPP5X01	Reinforce Plate			C	1
14	8	A3EPPP5P01	Regulating Plate			C	1
14	9	A3EPPP5N01	Cover			C	1
14	10	A108M50100	Photointerrupter	Alignment plate/F home sensor (PS12) Alignment plate/R home sensor (PS13) Trailing edge stopper home position detection sensor (PS20)		B	3
14	11	A3EPPP5Y01	Bracket			D	1
14	12	A3EPPP5500	Motor Assy	Alignment motor/Front (M7) Alignment motor/Rear (M8)		C	2
14	13	A3EPPP5R01	Pulley			C	2
14	14	A3EPPP5C00	Timing Belt			C	2
14	15	A3EPPP6J00	Shaft			D	2
14	16	A3EPPP5Q00	Timing Belt			C	2
14	17	A3EPPP6701	Torsion Coil spring			C	2
14	18	A3EPPP5T02	Pulley			C	2
14	19	A3EPPP5K00	Shaft			D	2
14	20	A3EPPP5M01	Drum			C	2
14	21	A3EPPPCT00	Frame			D	1
14	22	A3EPPP5L00	Shaft			D	2
14	23	A3EPPPCU00	Frame			D	1
14	24	A3EPPP6601	Bracket			D	1
14	25	A3EPPPBM01	Pressure Spring			C	2
14	26	A3EPPPC700	Wire Harness Assy			D	1
14	27	A3EPPPC000	Wire Harness Assy			D	1
14	a	A3EPPPBA01	Screw			D	
14	b	V144030603	Screw			V	
14	c	A3EPPPAY01	Screw			D	
14	d	V217030001	E Ring			V	
14	e	A3EPPPB301	Screw			D	
14	f	V217040001	E Ring			V	

25.8 HORIZONTAL TRANSPORT SECTION

25.8.1 P15

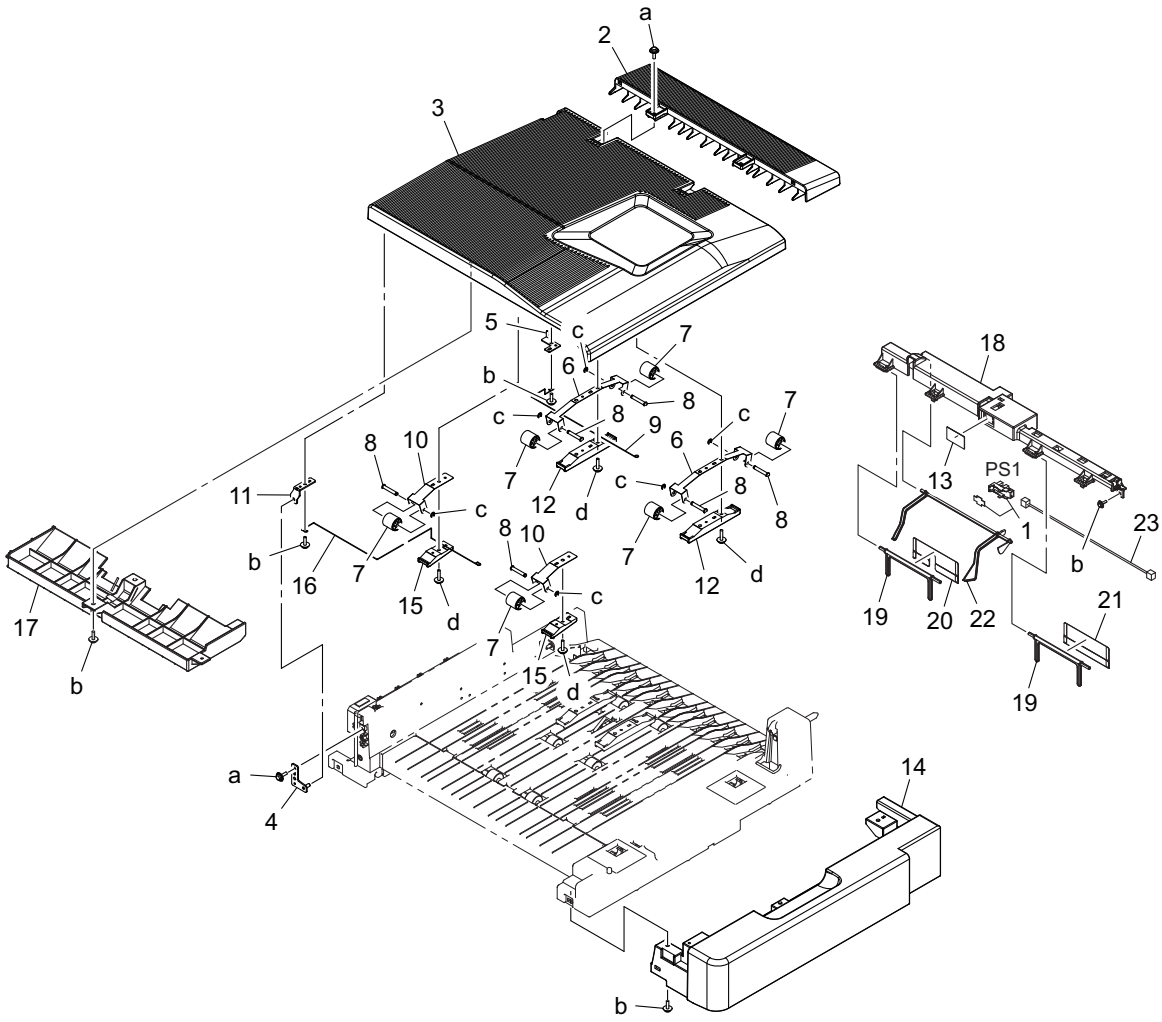

Page	Key	Parts No.	Description	Service Manual	Destinations	Class	Quantity
15	1	A108R90000	PHOTO INTERRUPTER			I	1
15	2	A3EP820100	Guide /1			C	1
15	3	A3EP819001	Guide /Upper			C	1
15	4	A3EP811100	Support Plate /1			D	1
15	5	A3EP811800	Support Plate /4			D	1
15	6	A3EP812500	Idler Plate spring /2			D	2
15	7	A0HR212700	Idler Roll /1			C	6
15	8	A3EP812100	Idler Shaft /1			D	6
15	9	A3EP814300	Ground Spring /2			C	1
15	10	A3EP812200	Idler Plate spring /1			D	2
15	11	A3EP811201	Support Plate /2			D	1
15	12	A3EP822800	Holding Part /1			D	2
15	13	A3EP822600	Sheet			D	1
15	14	A3EP814600	Cover /Front			C	1
15	15	A3EP822900	Holding Part /2			D	2
15	16	A3EP814200	Ground Spring /1			C	1
15	17	A3EP822100	Guide /7			C	1
15	18	A3EP822201	Holder			D	1
15	19	A3EP822300	Holding Part /1			D	2
15	20	A3EP822500	Holding Sheet /2			D	1
15	21	A3EP822400	Holding Sheet /1			D	1
15	22	A3EP822701	Lever			D	1
15	23	A3EPN10200	Sensor Relay harness			D	1

15	a	V153030804	screw			V	
15	b	V153030803	Screw			V	
15	c	V217030001	E Ring			V	
15	d	V153031003	screw			V	

25.8.2 P16

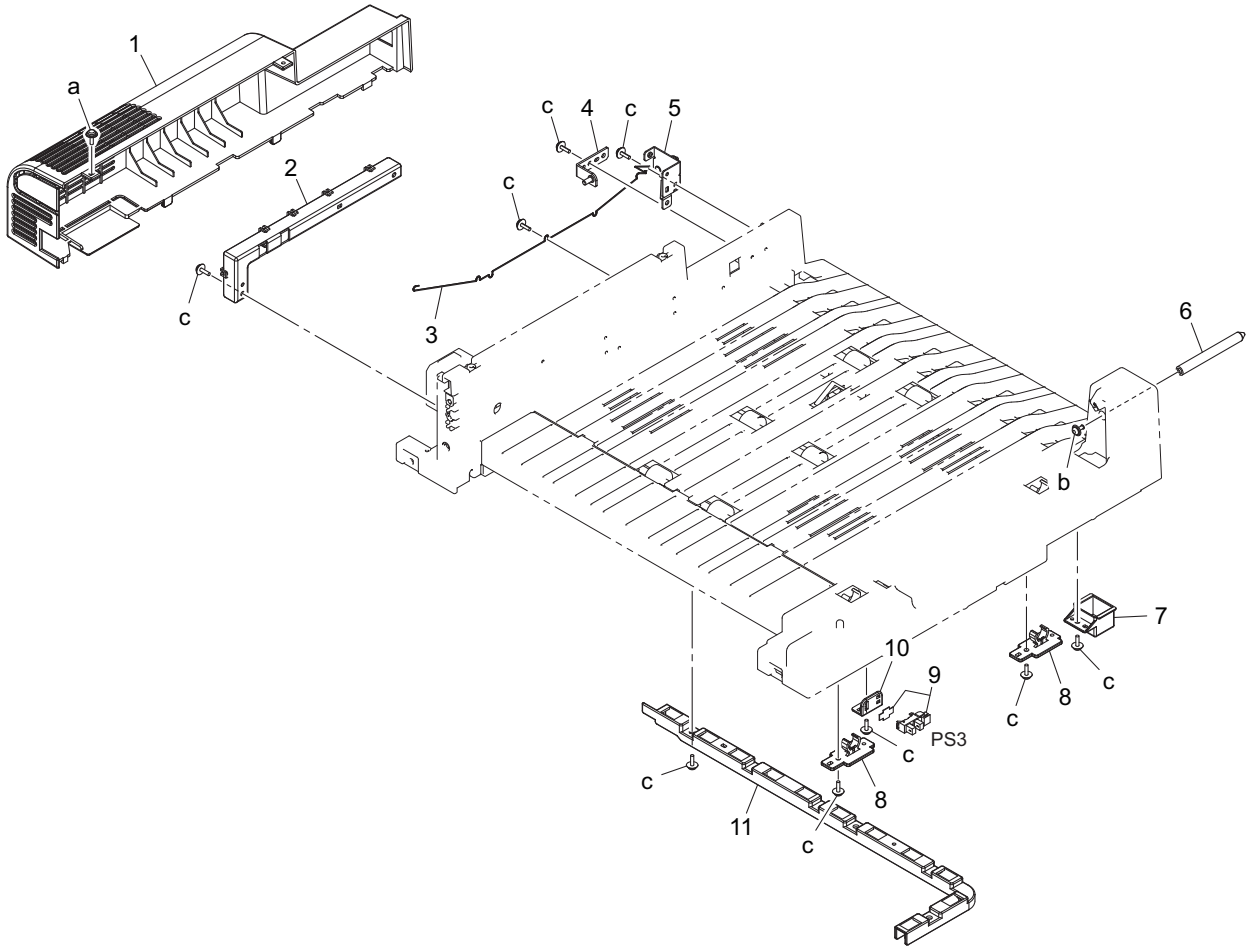

Page	Key	Parts No.	Description	Service Manual	Destinations	Class	Quantity
16	1	A3EP814700	Cover /Rear			C	1
16	2	A3EP812000	Regulating Part /1			D	1
16	3	A3EP815500	Ground Spring /3			C	1
16	4	A3EP811700	Support Plate /3			D	1
16	5	A3EP815000	Fixing Plate /3			D	1
16	6	A3EP815200	Positioning Shaft /2			D	1
16	7	A3EP821800	Cover Part			D	1
16	8	A3EP813900	Lock Part /2			C	2
16	9	A108R90000	PHOTO INTERRUPTER	RU cover open/close detection sensor (PS3)		I	1
16	10	A0HR701200	Mounting Plate			D	1
16	11	A3EP821600	Regulating Part /3			D	1
16	a	V153030804	screw			V	
16	b	V121030604	Screw			V	
16	c	V153030803	Screw			V	

25.8.3 P17

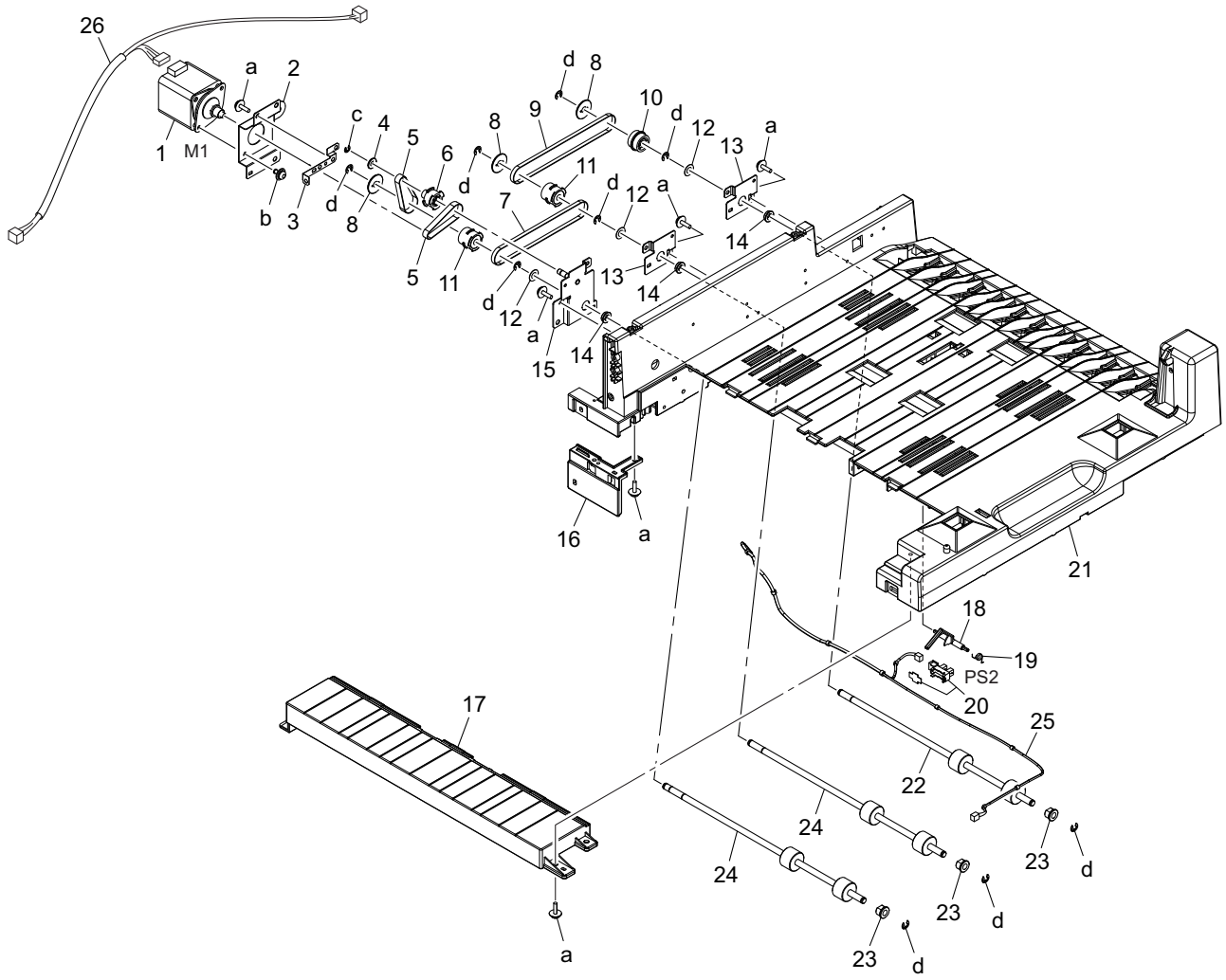

Page	Key	Parts No.	Description	Service Manual	Destinations	Class	Quantity
17	1	A0HRM10000	Stepping motor	RU transport motor (M1)		C	1
17	2	A3EP810700	Mounting Plate /1			D	1
17	3	A3EP815400	Ground Plate /3			D	1
17	4	A0HR213600	Flange			C	1
17	5	A3EP810900	Belt/1 114L			C	2
17	6	A0HR210200	Pulley 14/26T			C	1
17	7	A3EP820300	Belt/3 276L			C	1
17	8	A0HR210300	Flange			C	3
17	9	A0HR210900	Drive Belt /2			C	1
17	10	A0HR211000	Pulley 28T			C	1
17	11	A3EP816200	Drive Pulley/1 28T			C	2
17	12	07BA15930	SPACER B			C	3
17	13	A3EP816500	Fixing Plate /5			D	2
17	14	A00J617800	BALL BEARING			C	3
17	15	A3EP810800	Fixing Plate /1			D	1
17	16	A3EP814800	Fixing Part /2			C	1
17	17	A3EP814900	Guide /6			C	1
17	18	A3EP819801	Actuator			C	1
17	19	A3EP821700	Sensor Spring /1			C	1
17	20	A108R90000	PHOTO INTERRUPTER	RU entrance sensor (PS2)		I	1
17	21	A3EP810001	Guide /Lower			D	1
17	22	A3EP810600	Roller /1			C	1
17	23	A3EP822000	Bushing			D	3
17	24	A3EP811500	Roller /2			C	2

17	25	A3EPN10100	Sensor Relay harness			D	1
17	26	A3EPN10000	I/F Wiring			D	1
17	a	V153030803	Screw			V	
17	b	V116030603	Screw			V	
17	c	V217030001	E Ring			V	
17	d	V217040001	E Ring			V	

25.9 EXTERNAL PARTS

25.9.1 P18

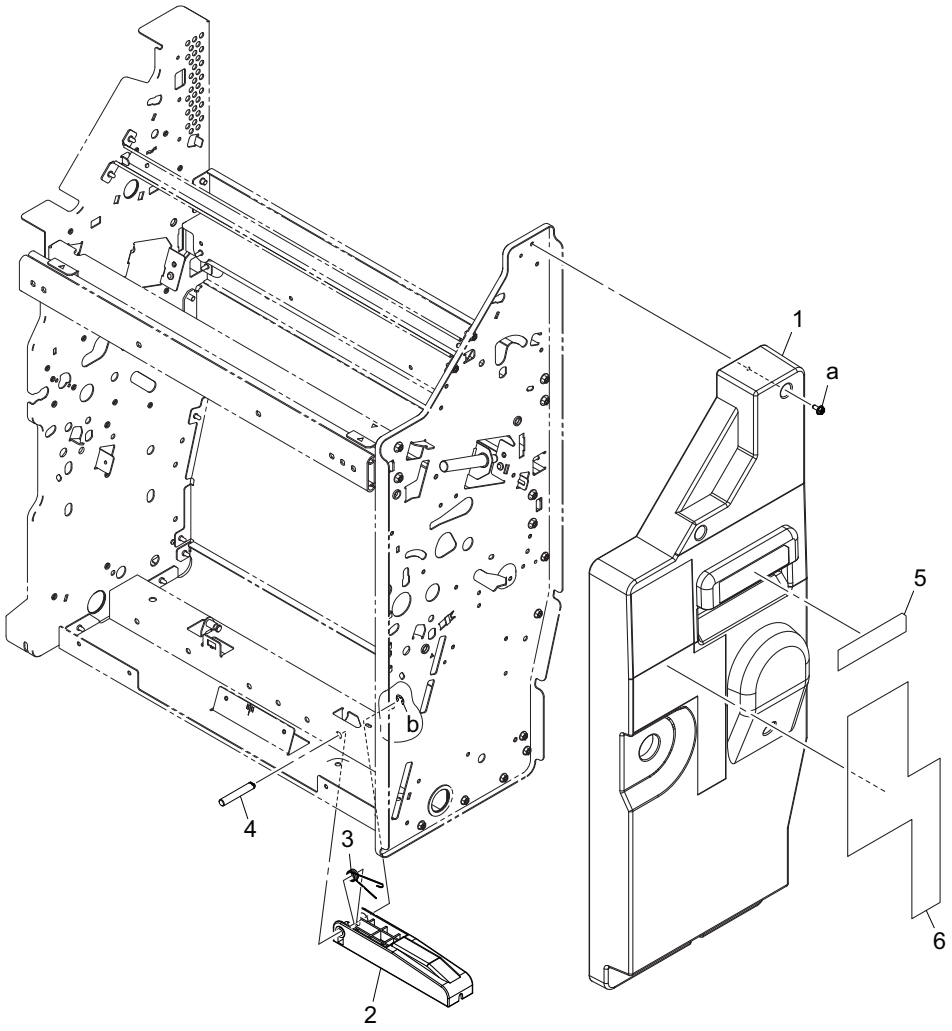

Page	Key	Parts No.	Description	Service Manual	Destinations	Class	Quantity
18	1	A3ERPP1E02	Cover/Front			C	1
18	2	A3ERPP1G01	Lever			C	1
18	3	A3ERPP1P00	Torsion Spring			C	1
18	4	A3ERPP1M00	Shaft			D	1
18	5	A3ERPP6Q00	Label			D	1
18	6	A3ERPP6P01	Label			D	1
18	a	A3EPPPB801	Screw			D	
18	b	V217040001	E Ring			V	

25.10 FRAME SECTION

25.10.1 P19

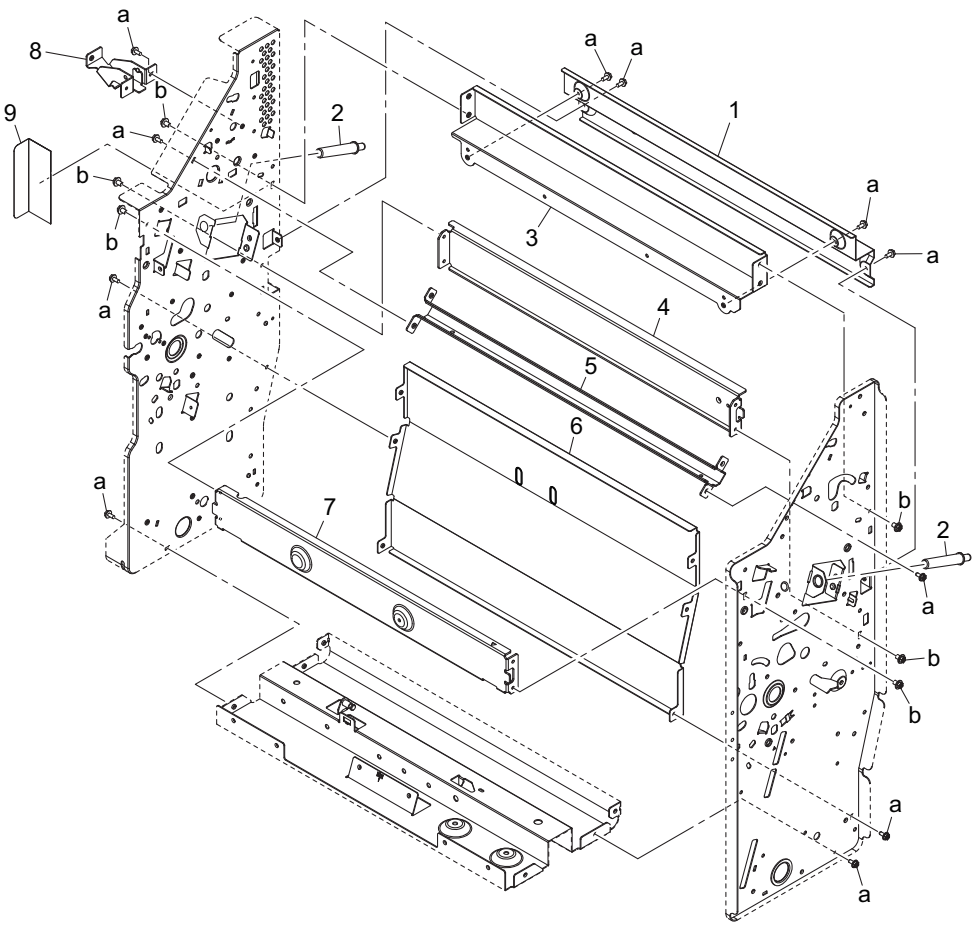

Page	Key	Parts No.	Description	Service Manual	Destinations	Class	Quantity
19	1	A3ERPP1F01	Mounting Plate			D	1
19	2	A3ERPP4P00	Shaft			D	2
19	3	A3ERPP1401	Stay			D	1
19	4	A3ERPP1301	Stay			D	1
19	5	A3ERPP1J01	Stay			D	1
19	6	A3ERPP1C02	Cover			D	1
19	7	A3ERPP1201	Stay			D	1
19	8	A3ERPP1801	Mounting Plate			D	1
19	9	A3ERPP1T00	Sheet			D	1
19	a	V144030603	Screw			V	
19	b	A3EPPPBQ01	Screw			D	

25.11 REAR FRAME SECTION

25.11.1 P20

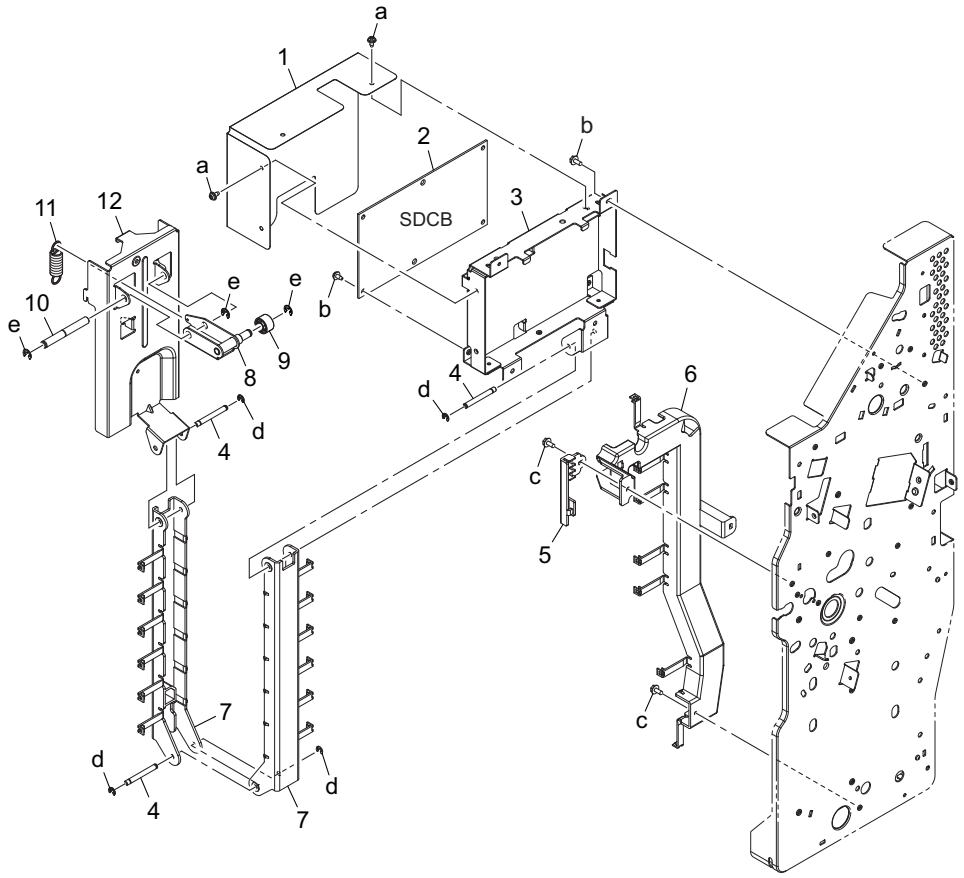

Page	Key	Parts No.	Description	Service Manual	Destinations	Class	Quantity
20	1	A3ERPP1R01	Sheet			C	1
20	2	A3ERPP6J01	PWB			I	1
20	3	A3ERPP1B02	Mounting Plate			D	1
20	4	A3ERPP1K00	Shaft			D	3
20	5	A3ERPP1S01	Cover			D	1
20	6	A3ERPP1D01	Guide			D	1
20	7	A3ERPP1701	Guide			D	2
20	8	A3ERPP1A01	Lock Lever			D	1
20	9	A3ERPP1600	Roll			C	1
20	10	A3ERPP1L00	Shaft			D	1
20	11	A3ERPP7M01	Tension Spring			C	1
20	12	A3ERPP1903	Mounting Plate			D	1
20	a	A3EPPPB101	Screw			D	
20	b	V144030603	Screw			V	
20	c	A3EPPPB701	Screw			D	
20	d	V217030001	E Ring			V	
20	e	V217040001	E Ring			V	

25.12 PAPER CEASE SECTION

25.12.1 P21

P 21

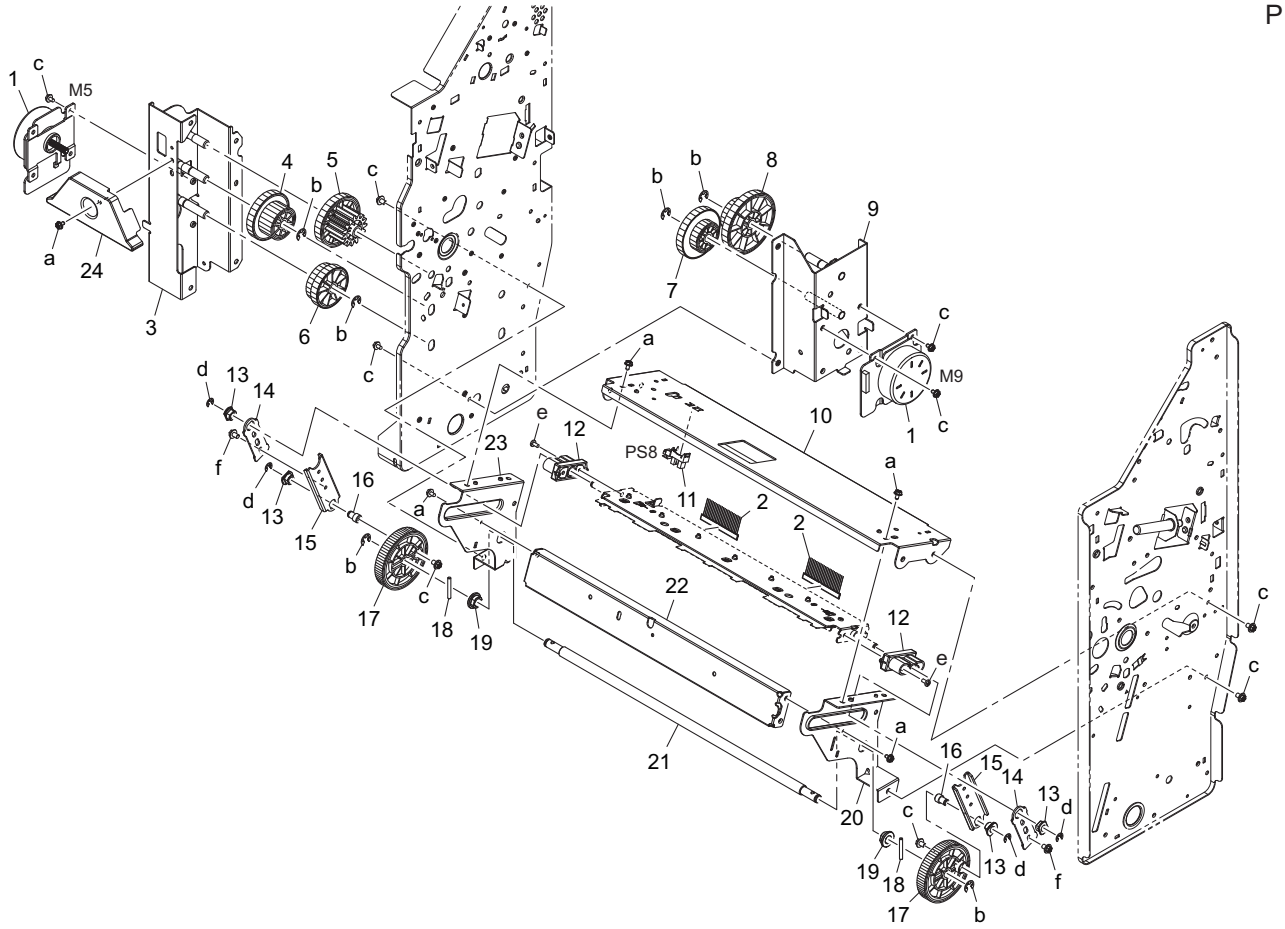

Page	Key	Parts No.	Description	Service Manual	Destinations	Class	Quantity
21	1	A3ERPP4S01	Motor	Center fold roller motor (M5) Center fold knife motor (M9)		C	2
21	2	A3ERPP7Q00	Neutralizing Brush			C	2
21	3	A3ERPP4701	Mounting Plate			D	1
21	4	A3ERPP4B01	Gear 24/46T			C	1
21	5	A3ERPP4E00	Gear 15/40T			C	1
21	6	A3ERPP4F01	Gear 34/80T			C	1
21	7	A3ERPP4U02	Gear 28/96T			C	1
21	8	A3ERPP4T01	Gear 24/60T			C	1
21	9	A3ERPP4301	Mounting Plate			D	1
21	10	A3ERPP3X01	Mounting Plate			D	1
21	11	A108M50100	Photointerrupter	Center fold knife home sensor (PS8)		B	1
21	12	A3ERPP4900	Holder			D	2
21	13	A3EPPP1101	Bushing			D	4
21	14	A3ERPP4V01	Plate			D	2
21	15	A3ERPP4201	Slide Plate			D	2
21	16	A3ERPP4K00	Shaft			D	2
21	17	A3ERPP4A01	Gear 46T			C	2
21	18	A3EPPPAS01	Pin			D	2
21	19	A3EPPP1201	Bushing			D	2
21	20	A3ERPP3Y01	Mounting Plate			D	1
21	21	A3ERPP4J00	Shaft			D	1
21	22	A3ERPP4101	Stay			D	1
21	23	A3ERPP4001	Mounting Plate			D	1
21	24	A3ERPP1H01	Cover			D	1
21	a	V144030603	Screw			V	

21	b	V217060001	E Ring			V	
21	c	A3EPPPBQ01	Screw			D	
21	d	V217040001	E Ring			V	
21	e	A3EPPPB001	Screw			D	
21	f	A3ERPP7T00	Screw			D	

25.12.2 P22

P 22

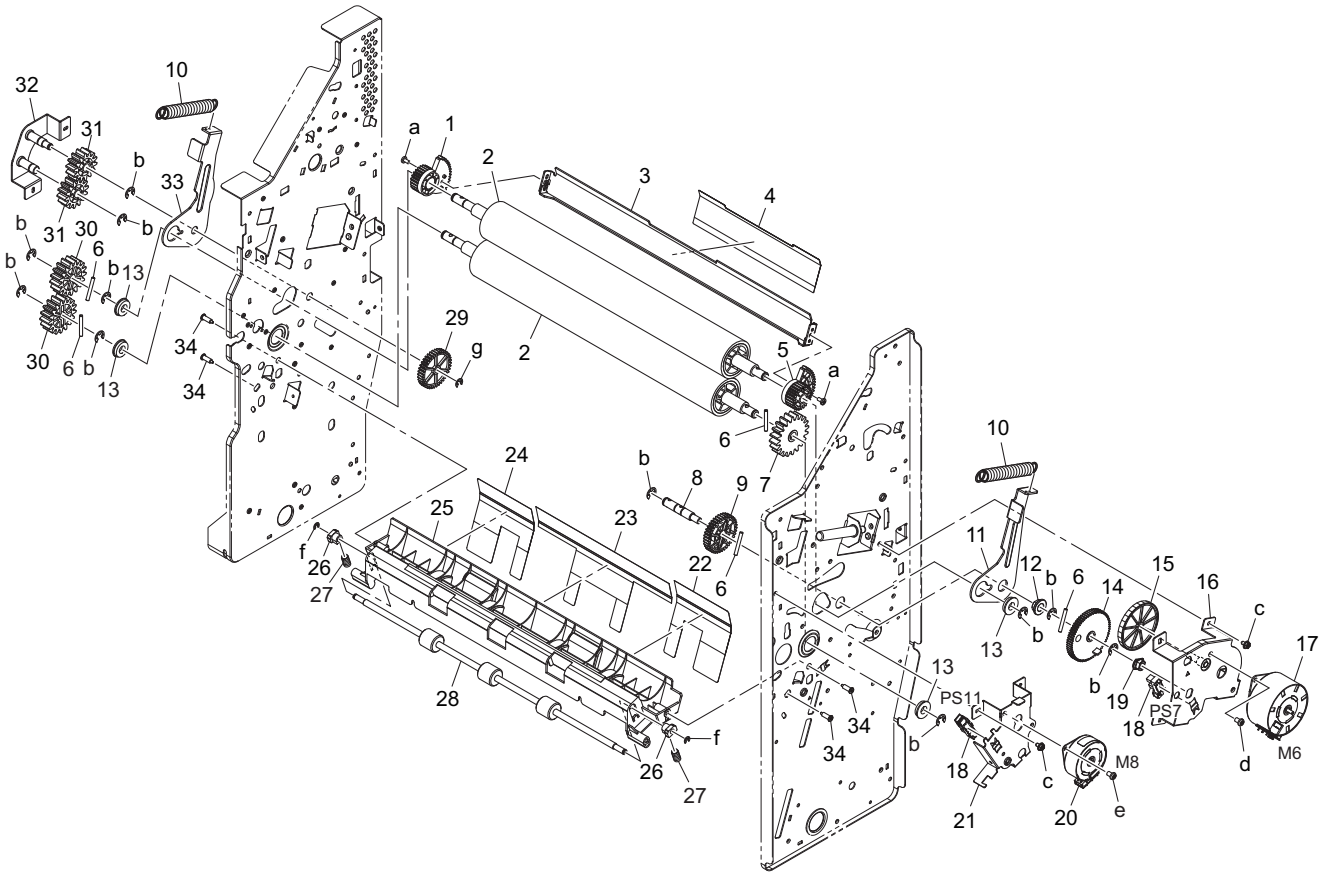

Page	Key	Parts No.	Description	Service Manual	Destinations	Class	Quantity
22	1	A3ERPP4Q01	Gear			C	1
22	2	A3ERPP4N01	Roller			C	2
22	3	A3ERPP4802	Guide Plate			D	1
22	4	A3ERPP4R01	Plate			D	1
22	5	A3ERPP4G01	Gear			C	1
22	6	A3EPPPAS01	Pin			D	5
22	7	A3ERPP5E00	Gear 20T			C	1
22	8	A3ERPP4L00	Shaft			D	1
22	9	A3ERPP4H00	Gear 38T			C	1
22	10	A3ERPP4M02	Tension Spring			C	2
22	11	A3ERPP4401	Arm			D	1
22	12	A3EPPP1201	Bushing			D	1
22	13	A1RF529300	Ball bearing			C	4
22	14	A3ERPP5701	Gear 46T			C	1
22	15	A3ERPP5801	Gear 15/93T			C	1
22	16	A3ERPP5101	Mounting Plate			D	1
22	17	A3ERPP5R00	Motor	Tri-folding guide motor (M6)		C	1
22	18	A108M50100	Photointerrupter	Guide home sensor (PS7) Receving roller retraction sensor (PS11)		B	2
22	19	A3EPPP1101	Bushing			D	1
22	20	A3ERPP3N00	Motor	Center fold guide motor (M8)		C	1

22	21	A3ERPP5202	Mounting Plate			D	1
22	22	A3ERPP5P00	Seal			C	1
22	23	A3ERPP5N00	Seal			C	1
22	24	A3ERPP5Q00	Seal			C	1
22	25	A3ERPP4Y01	Guide			D	1
22	26	A3ERPP5M01	Bushing			D	2
22	27	A3ERPP7K00	Pressing Spring			C	2
22	28	A3ERPP5J01	Roller			C	1
22	29	A3ERPP5S00	Gear 38T			C	1
22	30	A3ERPP4C00	Gear 17T			C	2
22	31	A3ERPP4D00	Gear 14T			C	2
22	32	A3ERPP4601	Mounting Plate			D	1
22	33	A3ERPP4501	Arm			D	1
22	34	A3EPPP2501	Screw			D	4
22	a	A3EPPPB001	Screw			D	
22	b	V217060001	E Ring			V	
22	c	V144030603	Screw			V	
22	d	A3ERPP6K01	Screw			D	
22	e	A3EPPPAY01	Screw			D	
22	f	V217030001	E Ring			V	
22	g	V217040001	E Ring			V	

25.12.3 P23

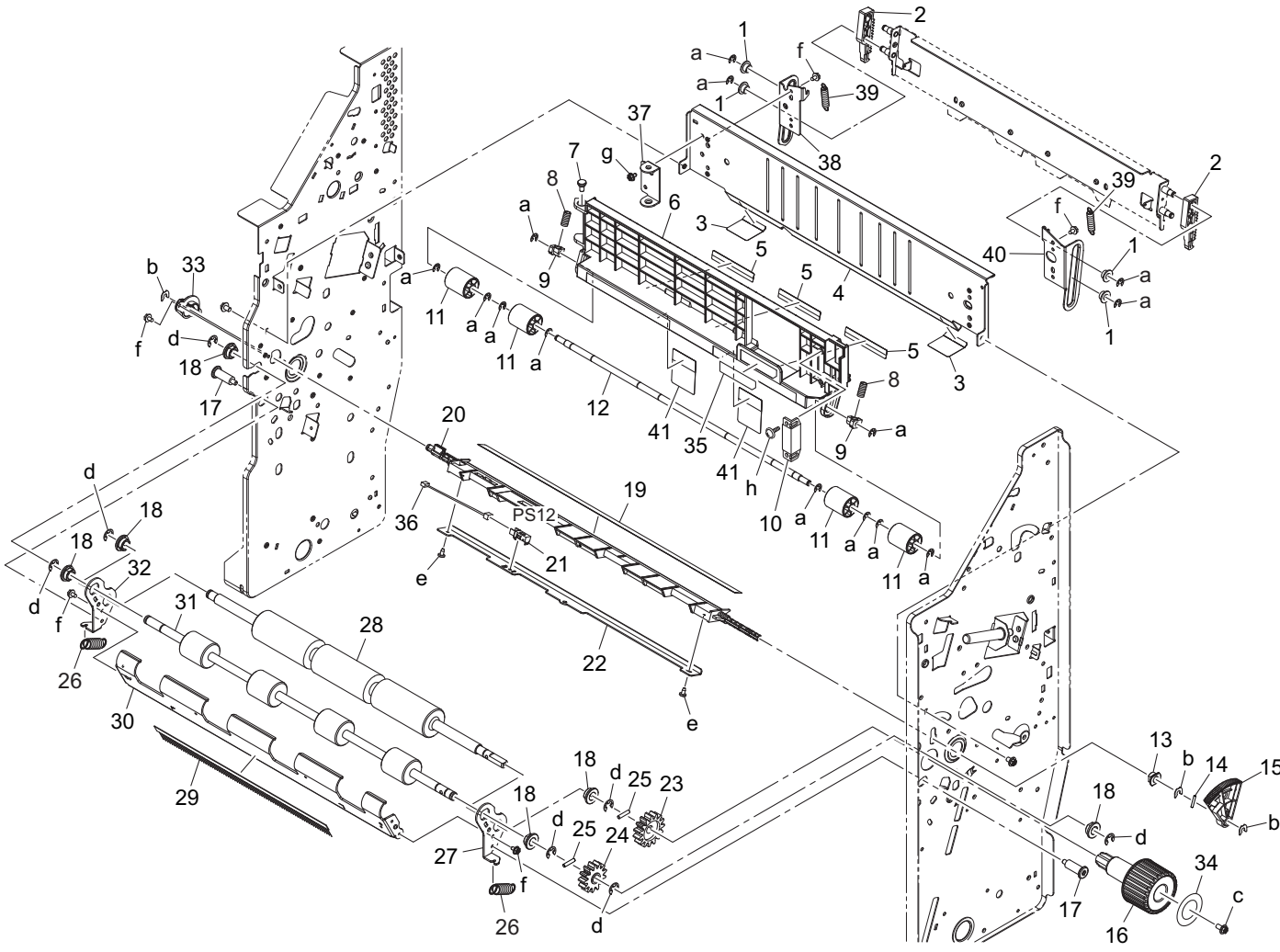

Page	Key	Parts No.	Description	Service Manual	Destinations	Class	Quantity
23	1	A3ERPP5A00	Bushing			D	4
23	2	A3ERPP5500	Gear			C	2

23	3	A3ERPP6401	Seal			C	2
23	4	A3ERPP4X01	Guide Plate			D	1
23	5	A3ERPP6501	Seal			C	3
23	6	A3ERPP5404	Guide			D	1
23	7	A02E193400	Shoulder screw			C	1
23	8	A3ERPP7K00	Pressing Spring			C	2
23	9	A3ERPP5M01	Bushing			D	2
23	10	4425337201	MAGNET CATCH			D	1
23	11	A3ERPP5900	Roll			C	4
23	12	A3ERPP5H00	Shaft			D	1
23	13	A3EPPP1400	Bushing			D	1
23	14	A3EPPPAR01	Pin			D	1
23	15	A3ERPP5C00	Gear			C	1
23	16	A3ERPP5D01	Knob			C	1
23	17	A3ERPP6101	Shoulder Screw			D	2
23	18	A3EPPP1201	Bushing			D	6
23	19	A3ERPP6301	Seal			C	1
23	20	A3ERPP5B02	Guide Plate			D	1
23	21	A0EDM50100	Photoreflector	Fold exit sensor (PS12)		I	1
23	22	A3ERPP6201	Auxiliary Plate			D	1
23	23	A3ERPP5F01	Gear 15T			C	1
23	24	A3ERPP5G02	Gear 13T			C	1
23	25	A3ERPP1101	Pin			D	2
23	26	A3ERPP7M01	Tension Spring			C	2
23	27	A3ERPP5302	Mounting Plate			D	1
23	28	A3ERPP5L01	Roller			C	1
23	29	A3ERPP5Y01	Neutralizing Brush			D	1
23	30	A3ERPP5002	Guide Plate			D	1
23	31	A3ERPP5K01	Roller			C	1
23	32	A3ERPP5602	Mounting Plate			D	1
23	33	A3ERPP5X00	Bushing			D	1
23	34	A3ERPP6S00	Label			D	1
23	35	A3ERPP6U00	Label			D	1
23	36	A3ERPP7H00	Wire Harness Assy			D	1
23	37	A3ERPP7401	Bracket			D	1
23	38	A3ERPP7201	Bracket			D	1
23	39	A3ERPP7302	Tension Spring			C	2
23	40	A3ERPP7102	Bracket			D	1
23	41	A3ERPP6001	Seal			C	2
23	a	V217040001	E Ring			V	
23	b	V218040086	E ring			V	
23	c	A3EPPPCJ01	Screw			D	
23	d	V217060001	E Ring			V	
23	e	A3ERPP6L01	Screw			D	
23	f	V144030603	Screw			V	
23	g	V118031003	screw			V	
23	h	A3EPPPBA01	Screw			D	

25.13 PAPER TRANSPORT SECTION

25.13.1 P24

P 24

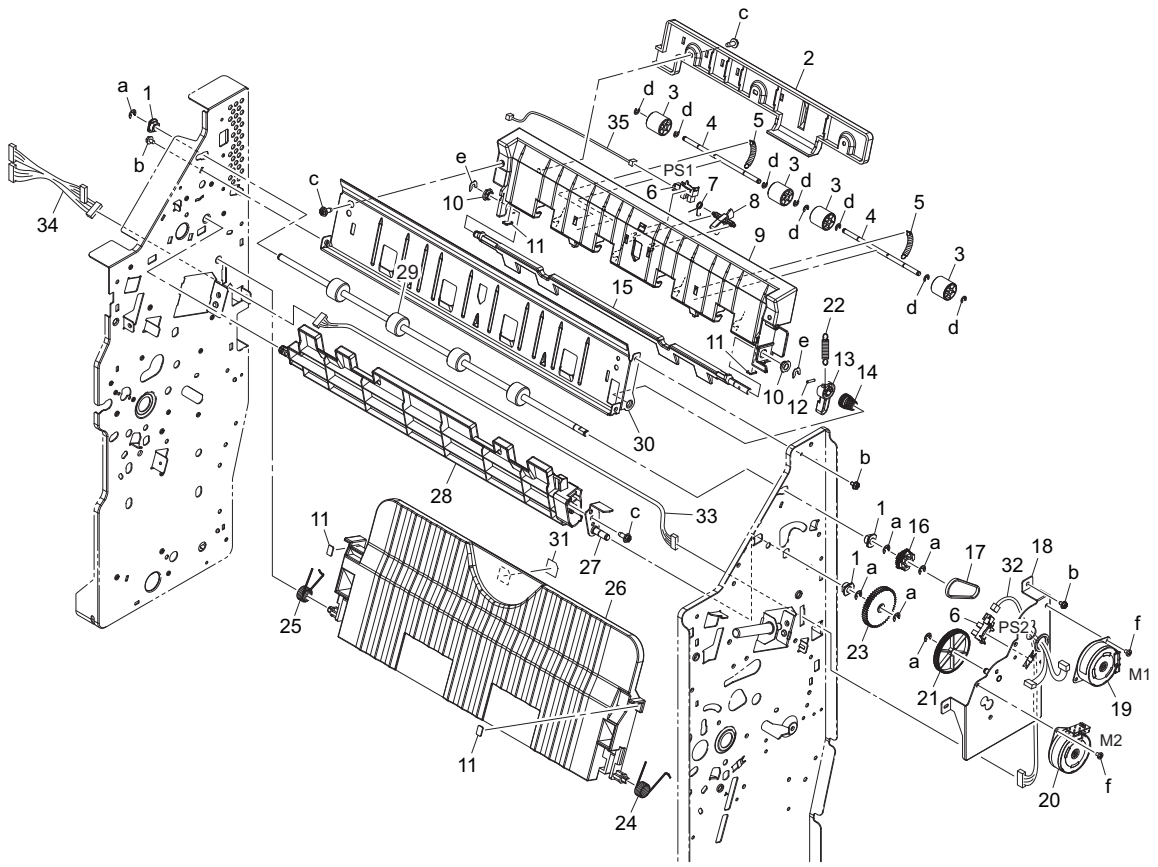

Page	Key	Parts No.	Description	Service Manual	Destinations	Class	Quantity
24	1	A3EPPP1101	Bushing			D	3
24	2	A3ERPP2J02	Guide			D	1
24	3	A3EPPP3702	Roll			C	4
24	4	A3ERPP2A00	Shaft			D	2
24	5	A3ERPP2N01	Tension Spring			C	2
24	6	A108M50100	Photointerrupter	Curl cover detection sensor (PS2) Center fold roller motor (M5)		B	2
24	7	A3ERPP2B00	Torsion Spring	FNS entrance sensor (PS4)		C	1
24	8	A3ERPP2101	Actuator			C	1
24	9	A3ERPP2301	Guide			D	1
24	10	A3EPPP1300	Bushing			D	2
24	11	A3ERPP2P01	Cushion			C	4
24	12	A3EPPPAQ01	Pin			D	1
24	13	A3ERPP2401	Lever			C	1
24	14	A3ERPP6X01	Pressure Spring			C	1
24	15	A3ERPP2901	Lever			C	1
24	16	A3ERPP2E01	Gear 30T			C	1
24	17	A3ERPP2G00	Timing Belt			C	1
24	18	A3ERPP1X01	Mounting Plate			D	1
24	19	A3ERPP2F00	Motor	SD transport motor (M1)		C	1
24	20	A3ERPP3N00	Motor	Paper discharge control motor (M2)		C	1
24	21	A3ERPP2700	Gear 16/88T			C	1
24	22	A3ERPP6V01	Tension Spring			C	1
24	23	A3ERPP2800	Gear 50T			C	1
24	24	A3ERPP2C00	Torsion Spring			C	1
24	25	A3ERPP2L00	Torsion Spring			C	1
24	26	A3ERPP1V02	Guide			D	1

24	27	A3ERPP2001	Mounting Plate			D	1
24	28	A3ERPP2201	Guide			D	1
24	29	A3ERPP2D01	Roller			C	1
24	30	A3ERPP1U02	Guide			D	1
24	31	A3ERPP6R00	Label			D	1
24	32	A3ERPP7800	Wire Harness Assy			D	1
24	33	A3ERPP7D01	Wire Harness Assy			D	1
24	34	A3ERPP7701	Wire Harness Assy			D	1
24	35	A3ERPP7C01	Wire Harness Assy			D	1
24	a	V217040001	E Ring			V	
24	b	V144030603	Screw			V	
24	c	A3EPPPB401	Screw			D	
24	d	V217030001	E Ring			V	
24	e	V218040086	E ring			V	
24	f	A3EPPPAY01	Screw			D	

25.14 STAPLER SECTION

25.14.1 P25

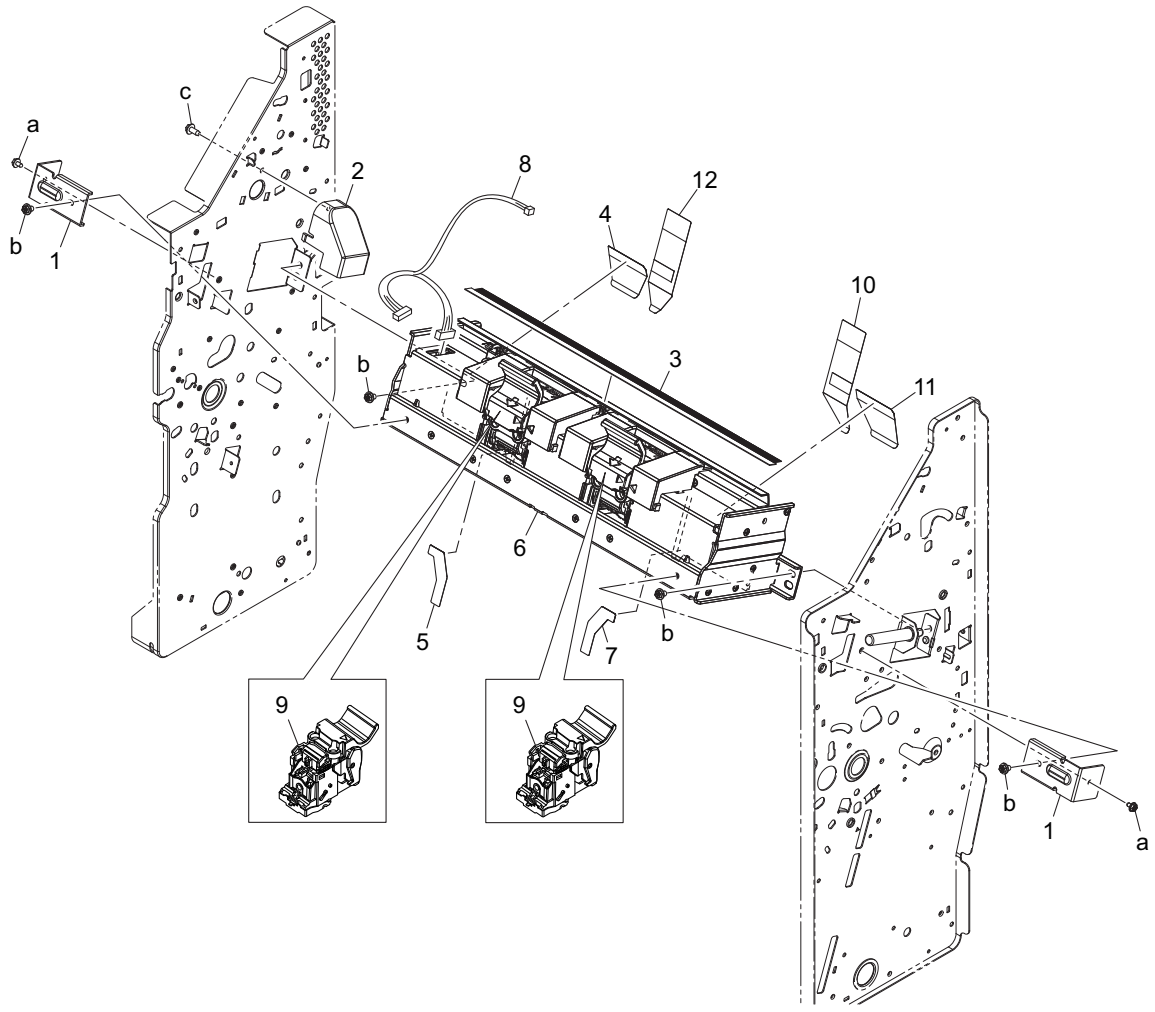

Page	Key	Parts No.	Description	Service Manual	Destinations	Class	Quantity
25	1	A3ERPP3Q01	Mounting Plate			D	2
25	2	A3ERPP3R02	Cover			C	1
25	3	A3ERPP3V01	Neutralizing Brush			C	1
25	4	A3ERPP3U02	Seal			C	1
25	5	A3ERPP3T01	Seal			C	1
25	6	A10D929300	Stapler Unit			C	1
25	7	A3ERPP3S01	Seal			C	1

25	8	A3ERPP7900	Wire Harness Assy			D	1
25	9	A10DP00100	STAPLE CARTRIDGE			C	2
25	10	A3ERPP7W01	Seal			C	1
25	11	A3ERPP7V00	Seal			C	1
25	12	A3ERPP7X01	Seal			C	1
25	a	V144030603	Screw			V	
25	b	A3EPPPBQ01	Screw			D	
25	c	A3EPPPB401	Screw			D	

25.15 ALIGNMENT SECTION

25.15.1 P26

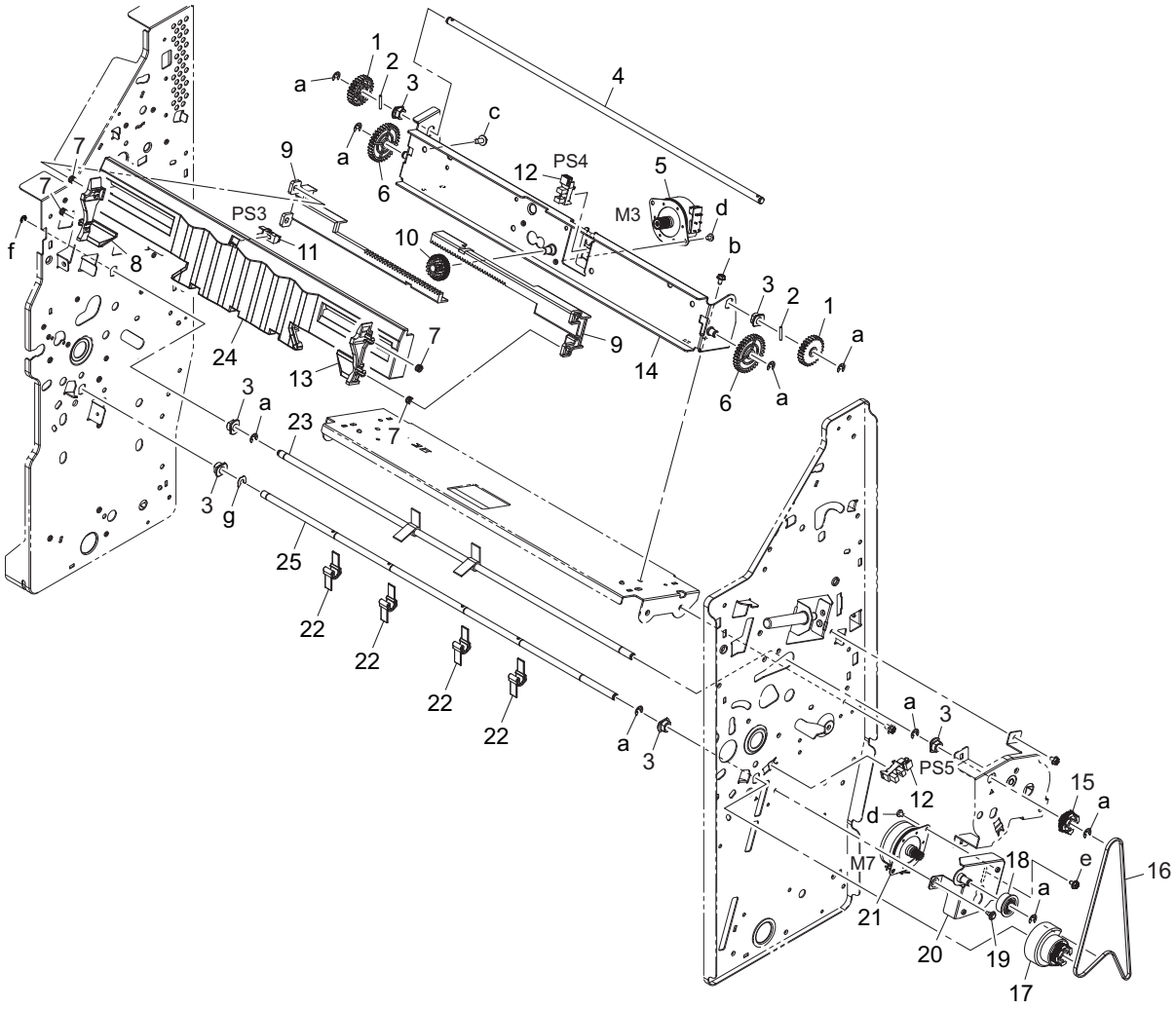

Page	Key	Parts No.	Description	Service Manual	Destinations	Class	Quantity
26	1	A3ERPP5T00	Gear 26T			C	2
26	2	A3ERPP1001	Pin			D	2
26	3	A3EPPP1101	Bushing			D	6
26	4	A3ERPP5U00	Shaft			D	1
26	5	A3ERPP3N00	Motor	Alignment motor (M3)		C	1
26	6	A3ERPP5V00	Gear 34T			C	2
26	7	A3ERPP3E00	Pressing Spring			C	4
26	8	A3ERPP3B02	Regulating Plate			D	1
26	9	A3ERPP3C02	Rack			D	2
26	10	A3ERPP3D01	Gear 14/44T			C	1
26	11	A0EDM50100	Photoreflector	Center staple/fold stacker paper detect sensor (PS3)		I	1
26	12	A108M50100	Photointerrupter	Alignment home sensor (PS4) Saddle exit sensor (PS5)		B	2

26	13	A3ERPP3A02	Regulating Plate			D	1
26	14	A3ERPP3901	Mounting Plate			D	1
26	15	A3ERPP2E01	Gear 30T			C	1
26	16	A3ERPP3J00	Timing Belt			C	1
26	17	A3ERPP3K01	Gear 30T			C	1
26	18	A3ERPP2R00	Roller			C	1
26	19	A092145400	Shoulder screw			C	1
26	20	A3ERPP2T01	Mounting Plate			D	1
26	21	A3ERPP3M00	Motor			C	1
26	22	A3ERPP7Y00	Paddle Assy			C	4
26	23	A3ERPP3801	Paddle Assy			C	1
26	24	A3ERPP6Y02	Cover			C	1
26	25	A3ERPP7Z00	Shaft			D	1
26	a	V217040001	E Ring			V	
26	b	V144030603	Screw			V	
26	c	A3EPPPB401	Screw			D	
26	d	A3EPPPAY01	Screw			D	
26	e	A3EPPPB101	Screw			D	
26	f	V217030001	E Ring			V	
26	g	V218040086	E ring			V	

25.15.2 P27

P 27

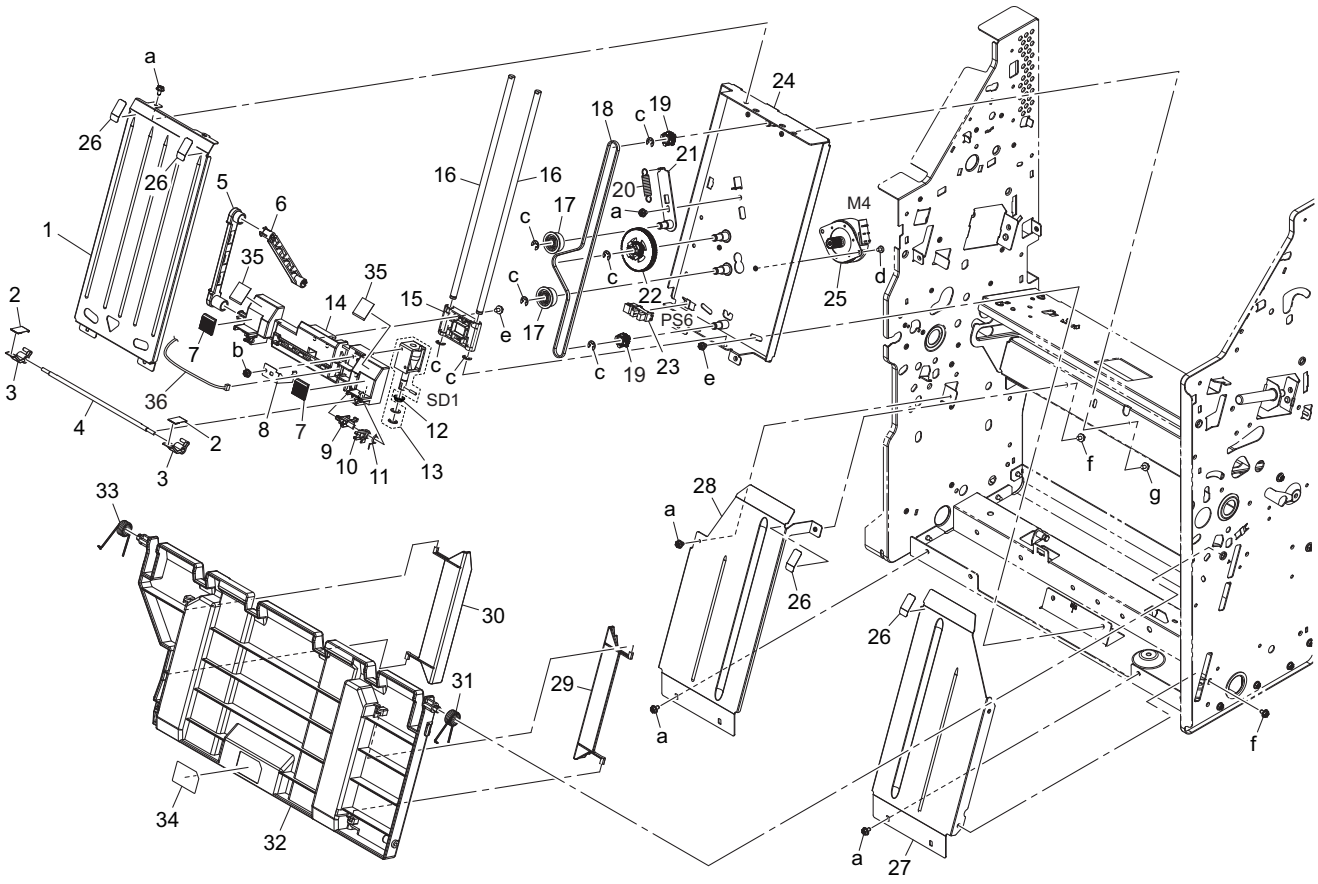

Page	Key	Parts No.	Description	Service Manual	Destinations	Class	Quantity
27	1	A3ERPP7N01	Guide Plate			D	1
27	2	A3ERPP3G01	Seal			C	2
27	3	A3ERPP3301	Stopper			C	2
27	4	A3ERPP3601	Shaft			D	1
27	5	A3ERPP3101	Arm			C	1
27	6	A3ERPP3201	Arm			C	1

27	7	A3ERPP3P01	Cushion			C	2
27	8	A3ERPP3L01	Plate Spring			D	1
27	9	A3ERPP3401	Lever			C	1
27	10	A3ERPP3000	Lever			C	1
27	11	A3ERPP3701	Torsion Spring			C	1
27	12	A3ERPP3F01	Pressing Spring			C	1
27	13	A10DM20000	Plunger solenoid	Stopper solenoid (SD1)		C	1
27	14	A3ERPP2V00	Holder			D	1
27	15	A3ERPP2U00	Holder			D	1
27	16	A3ERPP3500	Shaft			D	2
27	17	A3ERPP2R00	Roller			C	2
27	18	A3ERPP3H00	Timing Belt			C	1
27	19	A3ERPP2Y00	Gear 20T			C	2
27	20	A3ERPP7001	Tension Spring			C	1
27	21	A3ERPP2Q01	Tension Plate			D	1
27	22	A3ERPP2X00	Gear			C	1
27	23	A108M50100	Photointerrupter	Stopper home sensor (PS6)		B	1
27	24	A3ERPP2S03	Mounting Plate			D	1
27	25	A3ERPP3N00	Motor	Stopper drive motor (M4)		C	1
27	26	A3ERPP2M01	Seal			D	4
27	27	A3ERPP1Y01	Guide			D	1
27	28	A3ERPP2K01	Guide			D	1
27	29	A3ERPP2602	Guide			D	1
27	30	A3ERPP2H02	Guide			D	1
27	31	A3ERPP2C00	Torsion Spring			C	1
27	32	A3ERPP2503	Guide			D	1
27	33	A3ERPP2L00	Torsion Spring			C	1
27	34	A3ERPP6T00	Label			D	1
27	35	A3ERPP7U00	Seal			D	2
27	36	A3ERPP7F01	Wire Harness Assy			D	1
27	a	V144030603	Screw			V	
27	b	A3EPPPBN01	Screw			D	
27	c	V217040001	E Ring			V	
27	d	A3EPPPAY01	Screw			D	
27	e	A3EPPPBA01	Screw			D	
27	f	A3EPPPB101	Screw			D	
27	g	V116031003	Screw			V	

25.16 PAPER EXIT TRAY SECTION

25.16.1 P28

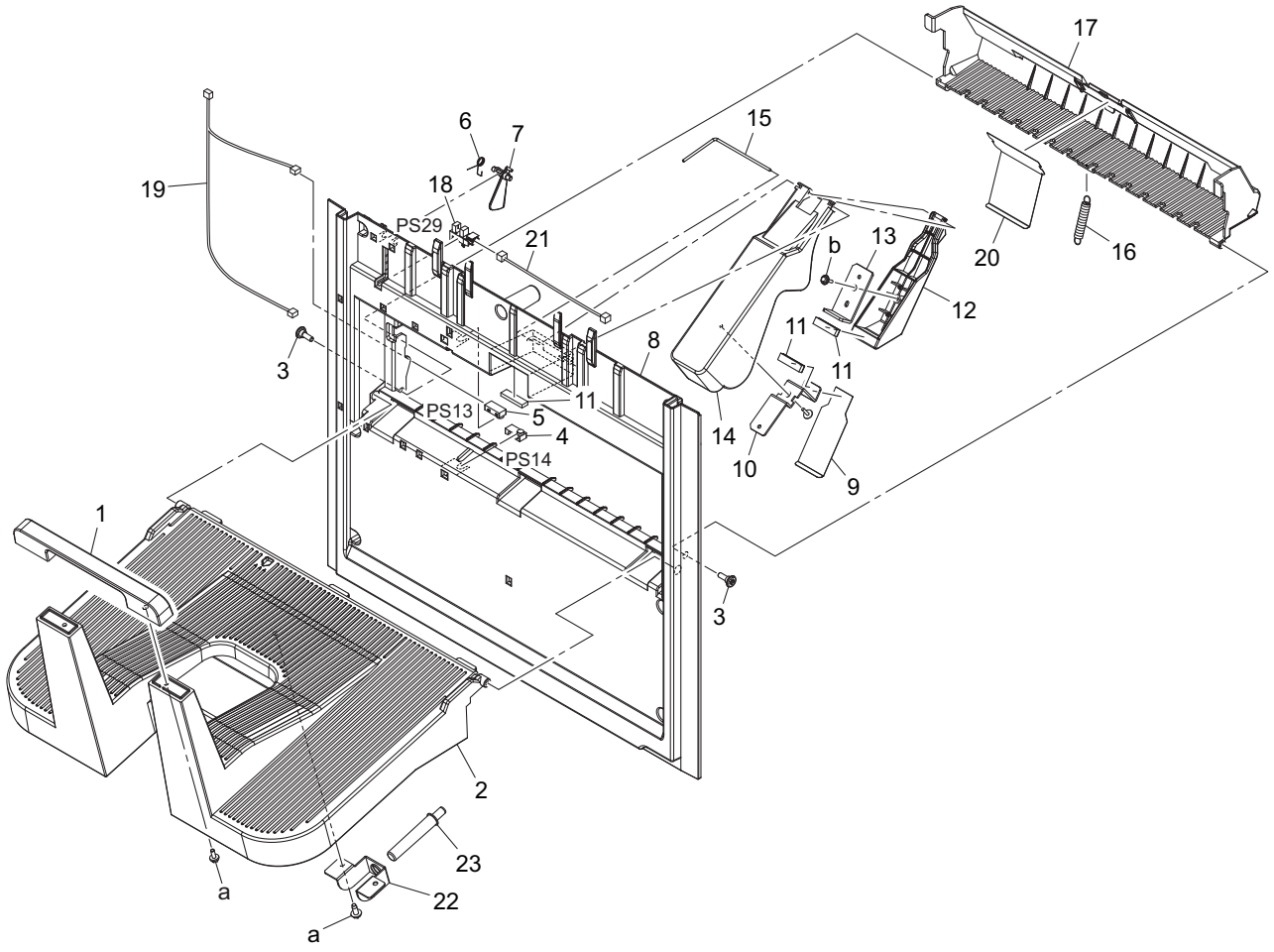

Page	Key	Parts No.	Description	Service Manual	Destinations	Class	Quantity
28	1	A3ERPP6801	Cover			C	1
28	2	A3ERPP6703	Tray			C	1
28	3	A3ERPP6G01	Shoulder Screw			D	2
28	4	A3EPPP2600	Photoreflector	Booklet tray empty detection sensor/out (PS14)		I	1
28	5	A3EPPP2700	Photoreflector	Booklet tray empty detection sensor/in (PS13)		I	1
28	6	A3EPPPBS00	Torsion Coil spring			C	1
28	7	A3EPPPA801	Actuator			C	1
28	8	A3ERPP6D02	Cover			C	1
28	9	A3ERPP6H01	Seal			C	1
28	10	A3ERPP6E01	Mounting Plate			D	1
28	11	A10D427300	Cushion			C	3
28	12	A3ERPP6A01	Cover			C	1
28	13	A3ERPP6F01	Mounting Plate			D	1
28	14	A3ERPP6901	Arm			C	1
28	15	A3ERPP6B00	Shaft			D	1
28	16	A3ERPP6C01	Tension Spring			C	1
28	17	A3ERPP6601	Guide			D	1
28	18	A108M50100	Photointerrupter	Main tray full detection sensor (PS29)		B	1
28	19	A3ERPP7J00	Wire Harness Assy			D	1
28	20	A3ERPP7501	Seal			C	1
28	21	A3EPPPCH00	Wire Harness Assy			D	1

28	22	A3ERPP8000	Mounting Plate			D	1
28	23	A3ERPP4P00	Shaft			D	1
28	a	A3EPPPB401	Screw			D	
28	b	A3EPPPB301	Screw			D	

25.17 WIRING

25.17.1 P29

P 29

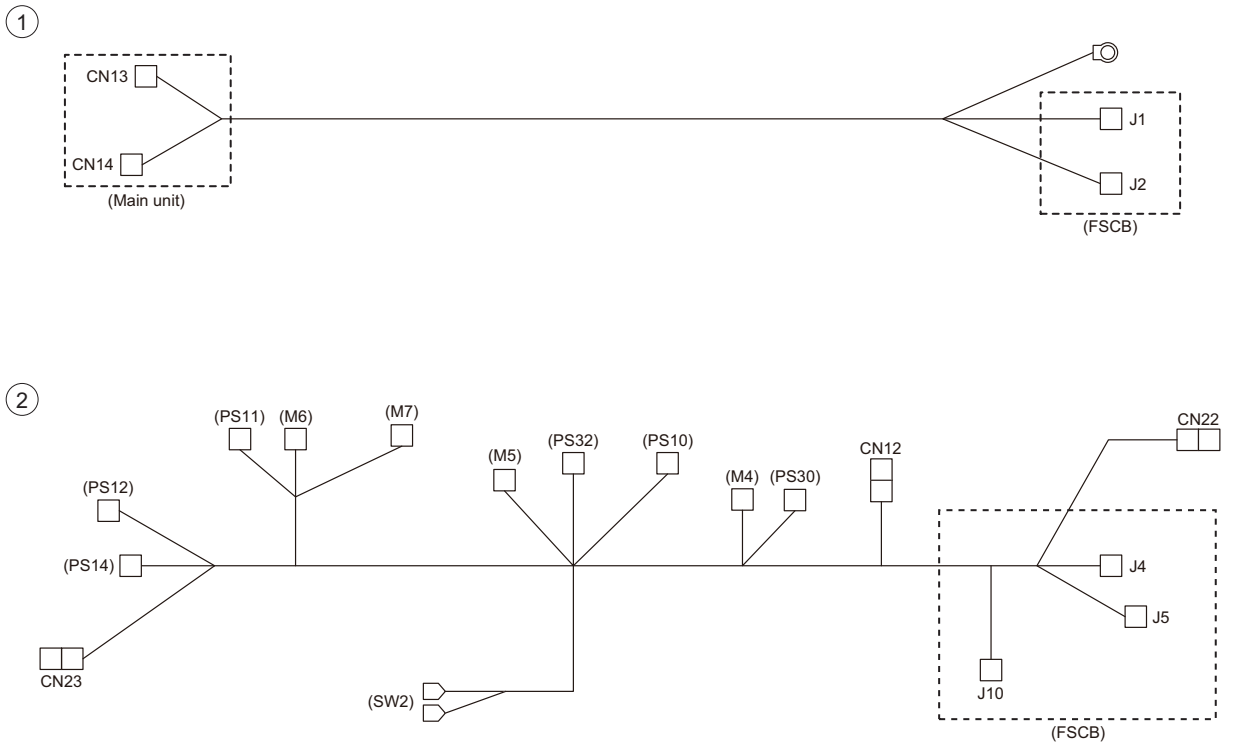

Page	Key	Parts No.	Description	Service Manual	Destinations	Class	Quantity
29	1	A3EPPPBF01	Harness Assy			D	1
29	2	A3EPPPBU01	Wire Harness Assy			D	1

25.17.2 P30

P 30

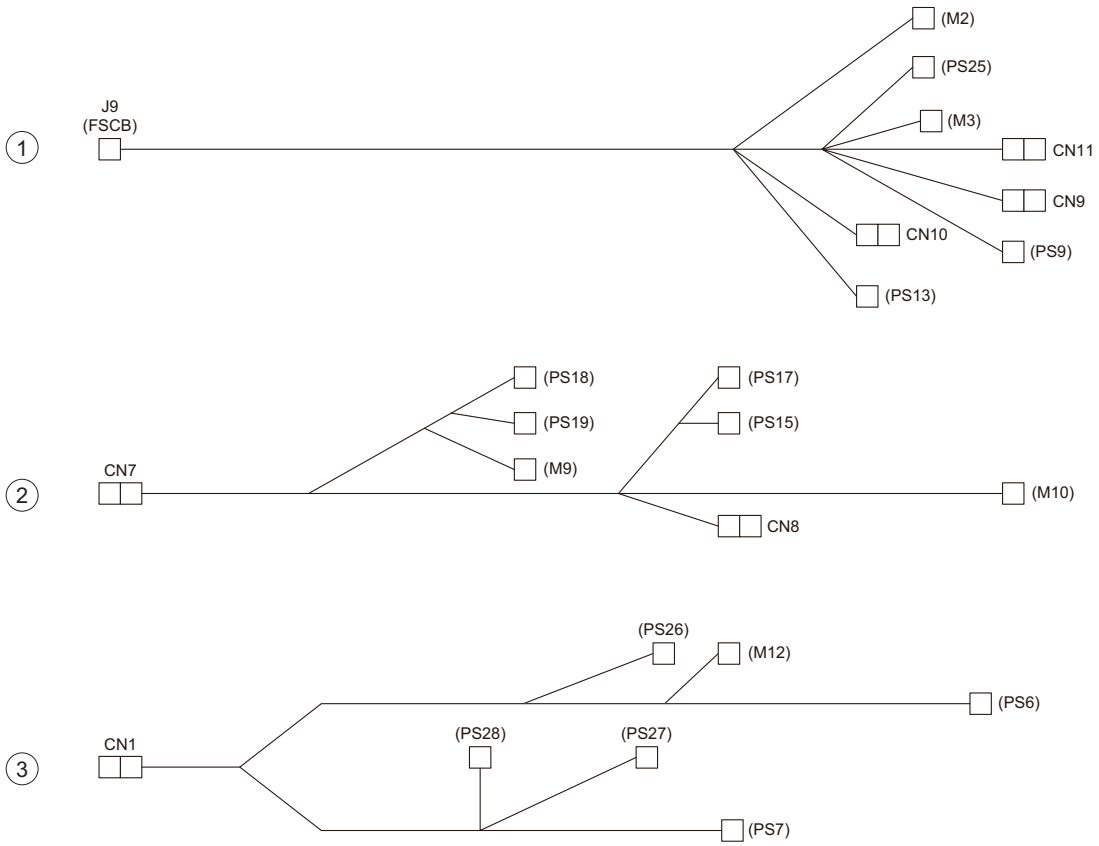

Page	Key	Parts No.	Description	Service Manual	Destinations	Class	Quantity
30	1	A3EPPPBX01	Wire Harness Assy			D	1
30	2	A3EPPPC900	Wire Harness Assy			D	1
30	3	A3EPPPCM00	Wire Harness Assy			D	1

25.17.3 P31

P 31

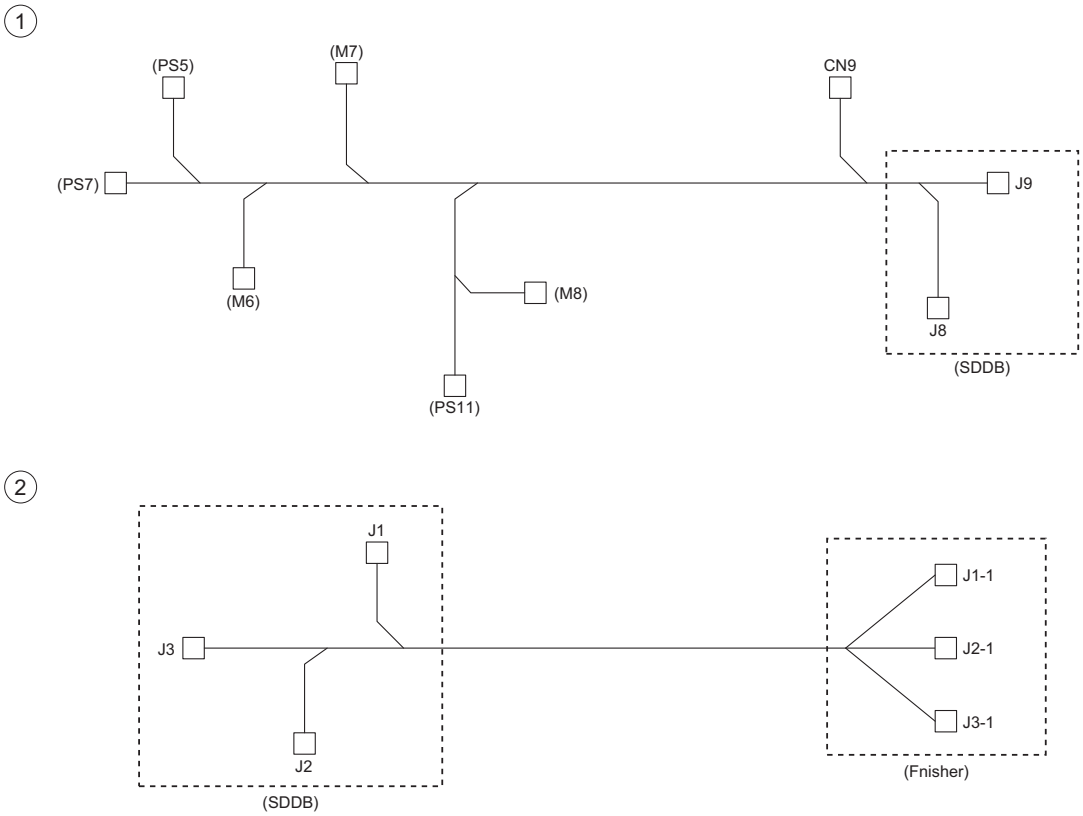

Page	Key	Parts No.	Description	Service Manual	Destinations	Class	Quantity
31	1	A3ERPP7E00	Wire Harness Assy			D	1
31	2	A3ERPP7600	Wire Harness Assy			D	1

25.17.4 P32

P 32

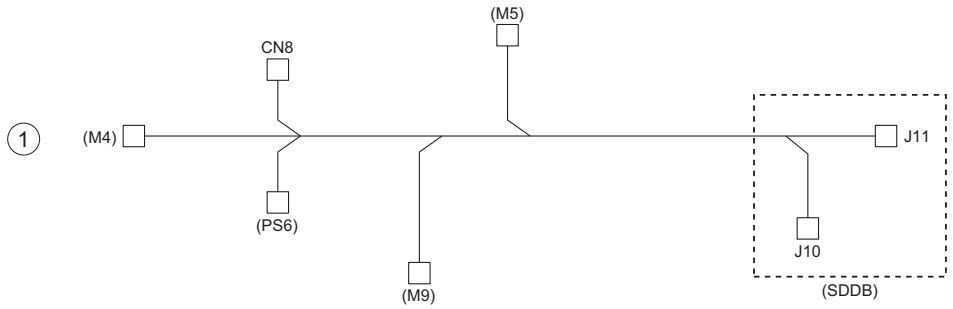

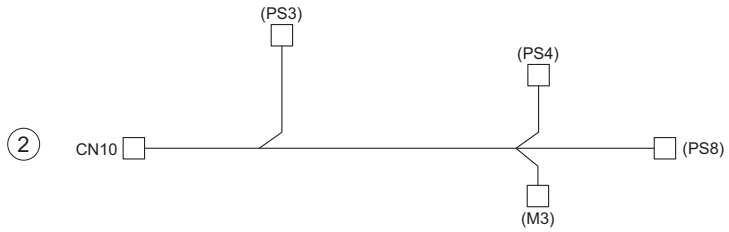

Page	Key	Parts No.	Description	Service Manual	Destinations	Class	Quantity
32	1	A3ERPP7B00	Wire Harness Assy			D	1
32	2	A3ERPP7A01	Wire Harness Assy			D	1

25.18 WIRING ACCESSORIES AND JIGS

25.18.1 P33

P 33

1 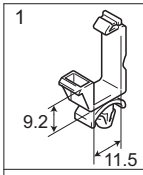	6 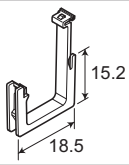	11	16	21	26	31	36
2 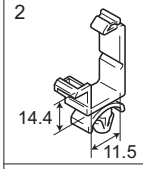	7 	12	17	22	27	32	37
3 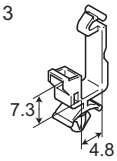	8	13	18	23	28	33	38
4 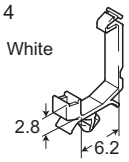	9	14	19	24	29	34	39
5 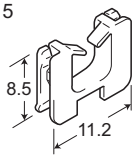	10	15	20	25	30	35	40

Page	Key	Parts No.	Description	Service Manual	Destinations	Class	Quantity
33	1	V500010082	Locking Wire Saddle			D	
33	2	V500010083	Locking Wire Saddle			D	
33	3	V500020098	Mini Locking wire saddle			D	
33	4	V500020099	Mini Locking wire saddle			D	
33	5	V570010021	Saddle			D	
33	6	V570010026	saddle			D	
33	7	V501010001	band			D	

25.19 ACCESSORY PARTS

25.19.1 P34

P 34

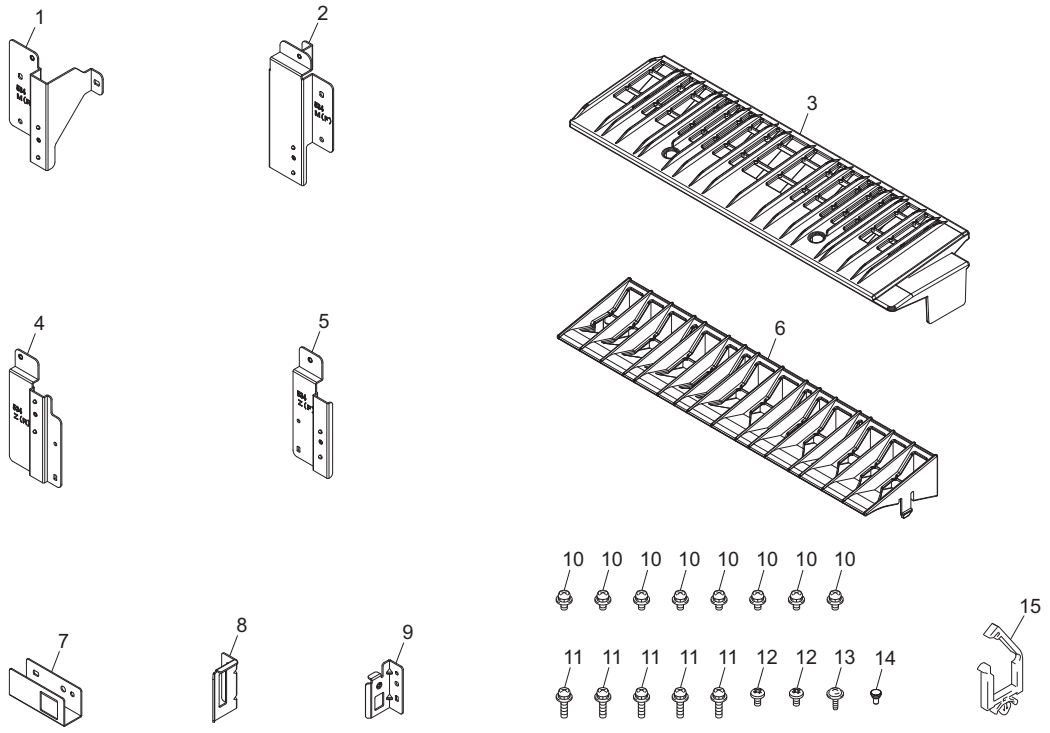

Page	Key	Parts No.	Description	Service Manual	Destinations	Class	Quantity
34	1	A3EP115100	Mounting Plate /Rear			D	1
34	2	A3EP115001	Mounting Plate /Front			D	1
34	3	A3EP810500	Guide /3			C	1
34	4	A3EP116500	Mounting Plate /Rear			D	1
34	5	A3EP116400	Mounting Plate /Front			D	1
34	6	A3EP810400	Guide /2			C	1
34	7	A3EP957100	Mounting Plate			D	1
34	8	A3EPPP1C01	Mounting Plate			D	1
34	9	A3EPPP1D01	Mounting Plate			D	1
34	10	V116040803	Screw			V	8
34	11	V116031603	Screw			V	5
34	12	V118030603	screw			V	2
34	13	V153030803	Screw			V	1
34	14	A02E193400	Shoulder screw			C	1
34	15	A3EPPPDB00	Wire Saddle			D	1

25.20 MAINTENANCE LIST

- The items with no Page/Key numbers are not handled as spare parts.

No.	Section	PM Parts Description	Maintenance Cycle (K=1,000)		Parts No.	Destinations	Page/Key	Note
			QTY	Replace				
1	FS-534	Paddle unit	2	2000K *1	A3EPPPD300		P13-26	
2		Paddle unit	1	2000K *1	A3EPPPD400		P13-27	
3	SD-511	Upper paddle assy	1	2,000K	A3ERPP3801		P26-23	*1
4		Lower paddle unit	4	2,000K	A3ERPP7Y00		P26-22	*1

- *1: Actual durable cycle (life counter value)

25.21 DESTINATION

Destination No.		Destinations		V	Hz	Model No.
A	A1	JAPAN		100	50/60	A3EPWYA
	A2	JAPAN				
B		USA, CANADA		120	60	A3EPWYA
C		EUROPEAN TYPE		220-240	50/60	A3EPWYA
D	D1	S.E ASIA TYPE	THAILAND,SRI LANKA,SINGAPORE,MALAYSIA,HONGKONG, PAKISTAN,INDIA,BANGLADESH,INDONESIA	220-240	50/60	A3EPWYA
	D3	OCEAINA TYPE	AUSTRALIA,NEW ZEALAND	220-240	50/60	A3EPWYA
E		PHILIPPINES		220-240	50/60	A3EPWYA
F	F1	SAUDI ARABIA				
	F2	SAUDI ARABIA		220-240	50/60	A3EPWYA
G	G1	C.S AMERICA		220-240	50/60	A3EPWYA
	G2	C.S AMERICA		120	60	A3EPWYA
H		TAIWAN		110	60	A3EPWYA
I		JORDAN, LEBANON, SYRIA, SOUTH AFRICA, IRAQ, IRAN, N.YEMEN, CAMEROON, UAE, BAHRAIN, OMAN, QATAR, KUWAIT, KENYA, TUNISIA, IVORY COAST, MOROCCO		220-240	50/60	A3EPWYA
J		CHINA		220-240	50/60	A3EPWYA
K		KOREA		220-240	50/60	A3EPWYA

26. OTHER OPTION (FK-508)

26.1 FAX KIT

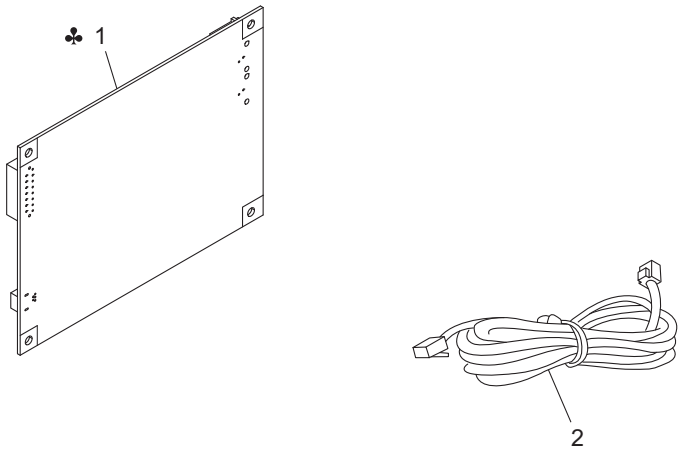

Page	Key	Parts No.	Description	ServiceManual	Destinations	Class	Quantity
1	1	A22MH01W06	CONTROL BOARD ASSY		B, C, D1, D3, F1, F2, G1, G2, I, J, K	I	1
1	1	A22MH01A06	CONTROL BOARD ASSY		A1	I	1
1	2	127A90020	MODULAR WIRING 1			C	1

26.2 DESTINATION

Destination No.		Destinations		V	Hz	Model No.
A	A1	JAPAN		100	50/60	A22M-W01
	A2	JAPAN		200	50/60	
B		USA, CANADA		120	60	A22M-011
C		EUROPEAN TYPE		220-240	50/60	A22M-021
D	D1	S.E ASIA TYPE	THAILAND,SRI LANKA,SINGAPORE,MALAYSIA,HONGKONG, PAKISTAN,INDIA,BANGLADESH,INDONESIA	220-240	50/60	A22M-041
	D3	OCEAINA TYPE	AUSTRALIA,NEW ZEALAND	220-240	50/60	A22M-051 A22M-0E1
E		PHILIPPINES		220-240	50/60	
F	F1	SAUDI ARABIA		127	60	A22M-011
	F2	SAUDI ARABIA		220-240	50/60	A22M-011
G	G1	C.S AMERICA		220-240	50/60	A22M-011

	G2	C.S AMERICA	120	60	A22M-011
H		TAIWAN	110	60	A22M-071
I		JORDAN, LEBANON, SYRIA, SOUTH AFRICA, IRAQ, IRAN, N.YEMEN, CAMEROON, UAE, BAHRAIN, OMAN, QATAR, KUWAIT, KENYA, TUNISIA, IVORY COAST, MOROCCO	220-240	50/60	A22M-0K1
J		CHINA	220-240	50/60	A22M-081
K		KOREA	220-240	50/60	A22M-091

27. OTHER OPTION (MK-728)

27.1 MK-728

27.1.1 P1

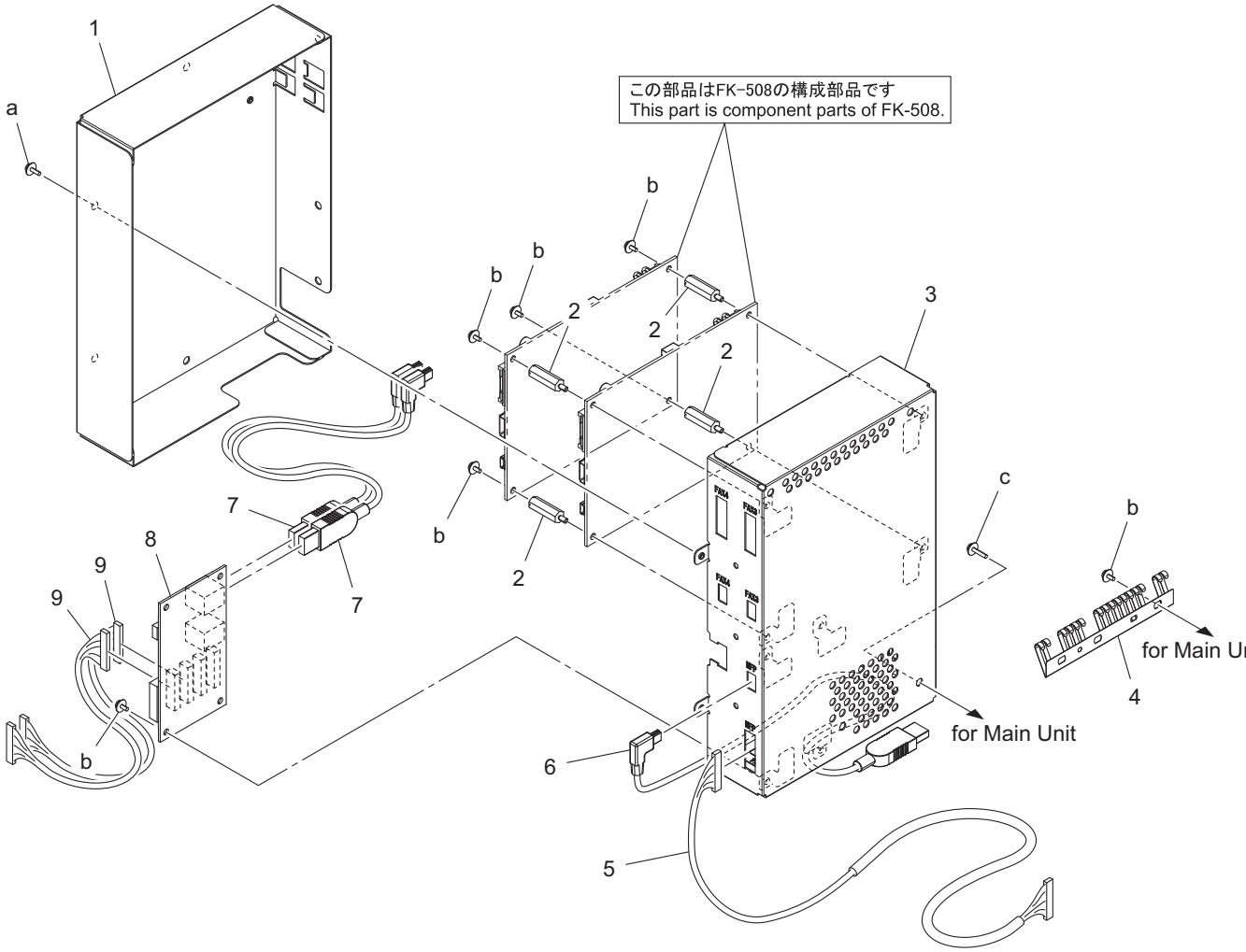

Page	Key	Parts No.	Description	Service Manual	Destinations	Class	Quantity
1	1	A4NP130201	Cover			D	1
1	2	A4NP130300	Shoulder screw			D	4
1	3	A4NP130100	Mounting Plate			D	1
1	4	A00J141400	Plate spring			D	1
1	5	A5C1N15N00	Power source Cable			D	1
1	6	A5C1N15M00	Interface Cable			D	1
1	7	A5C1N15P00	Interface Cable			D	2
1	8	A61FH02600	PWB assembly(PWB-FHUB)			I	1
1	9	A5C1N15Q00	Power source Cable			D	2
1	a	V116030804	Screw			V	
1	b	V116030603	Screw			V	
1	c	V116031203	Screw			V	

27.2 WIRING ACCESSORIES AND JIGS

27.2.1 P2

P 2

1 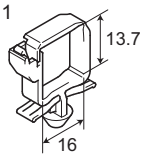	6	11	16	21	26	31	36
2 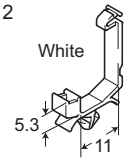	7	12	17	22	27	32	37
3 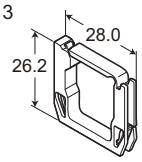	8	13	18	23	28	33	38
4 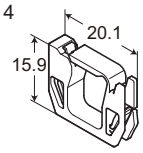	9	14	19	24	29	34	39
5	10	15	20	25	30	35	40

Page	Key	Parts No.	Description	Service Manual	Destinations	Class	Quantity
2	1	V500010084	Locking Wire Saddle			D	
2	2	V500020100	Mini Locking wire saddle			D	
2	3	V570010058	Wing Edge Saddle			D	
2	4	V570010060	Wing Edge Saddle			D	

27.3 DESTINATION

Destination No.		Destinations		V	Hz	Model No.
A	A1	JAPAN		100	50/60	A4NP-WY1
	A2	JAPAN				
B		USA, CANADA		120	60	A4NP-WY1
C		EUROPEAN TYPE				
D	D1	S.E ASIA TYPE	THAILAND, SRI LANKA, SINGAPORE, MALAYSIA, HONG KONG, PAKISTAN, INDIA, BANGLADESH, INDONESIA			
	D3	OCEAINA TYPE	AUSTRALIA, NEW ZEALAND			
E		PHILIPPINES				
F	F1	SAUDI ARABIA				
	F2	SAUDI ARABIA				
G	G1	C.S AMERICA				
	G2	C.S AMERICA		120	60	A4NP-WY1
H		TAIWAN				
I		JORDAN, LEBANON, SYRIA, SOUTH AFRICA, IRAQ, IRAN, N.YEMEN, CAMEROON, UAE, BAHRAIN, OMAN, QATAR, KUWAIT, KENYA, TUNISIA, IVORY COAST, MOROCCO				
J		CHINA				
K		KOREA				

S LAYOUT DRAWINGS FOR RELATED PARTS BY EACH TROUBLE CODE

1. C0002, C4802, C5601, CC15C, CEEE3

PARTS LAYOUT DRAWING

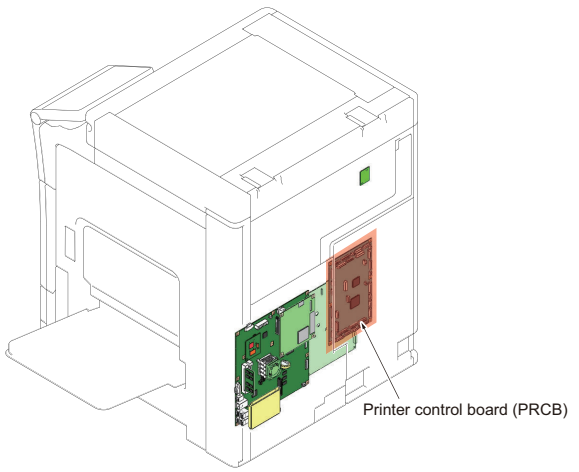

2. C0106

2.1 PC-110/PC-210

PARTS LAYOUT DRAWING/1

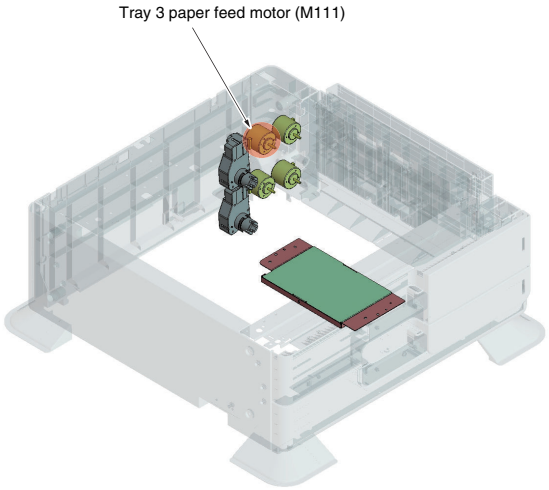

PARTS LAYOUT DRAWING/2

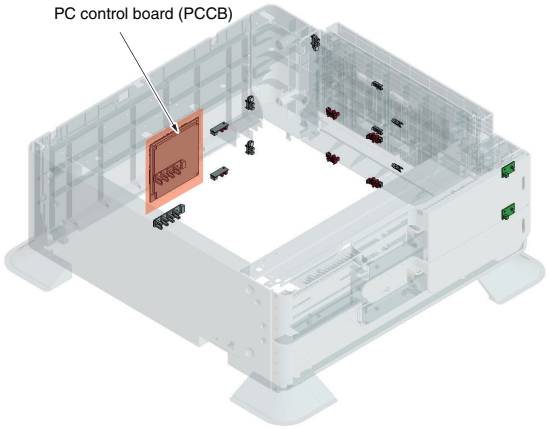

BOARD CONNECTOR LAYOUT DRAWING (PCCB) [PC-110]

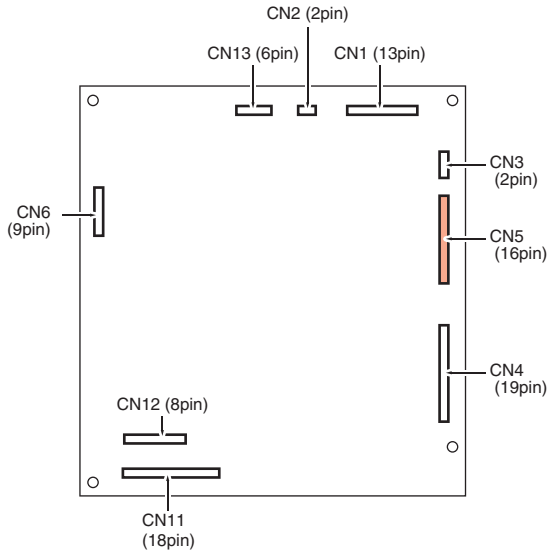

BOARD CONNECTOR LAYOUT DRAWING (PCCB) [PC-210]

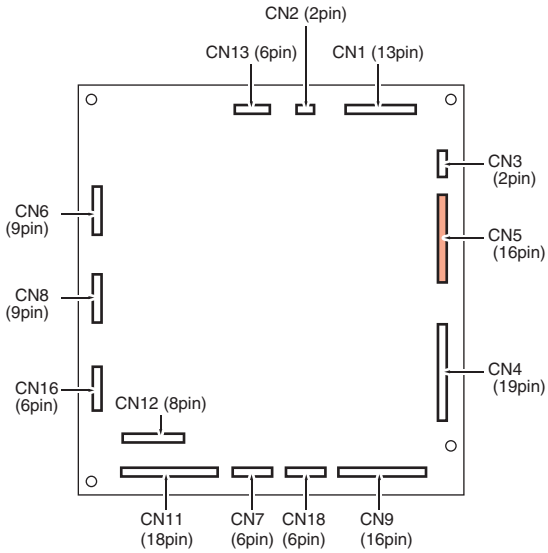

WIRING DIAGRAM

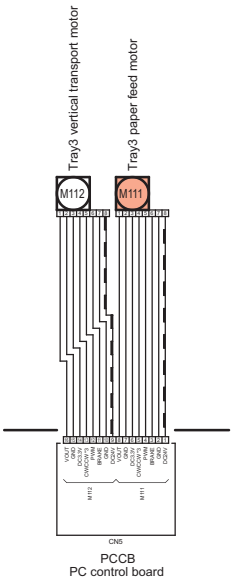

2.2 PC-410

PARTS LAYOUT DRAWING/1

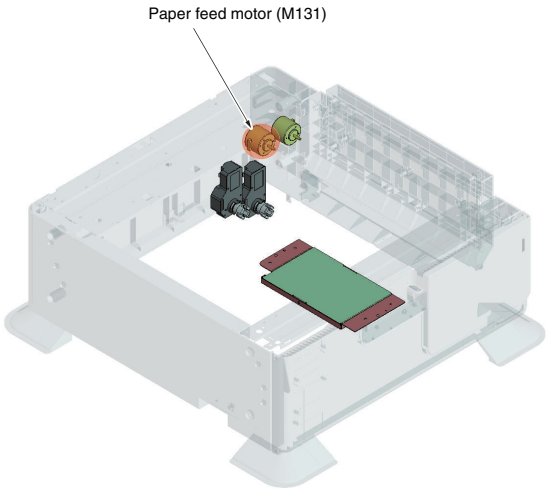

PARTS LAYOUT DRAWING/2

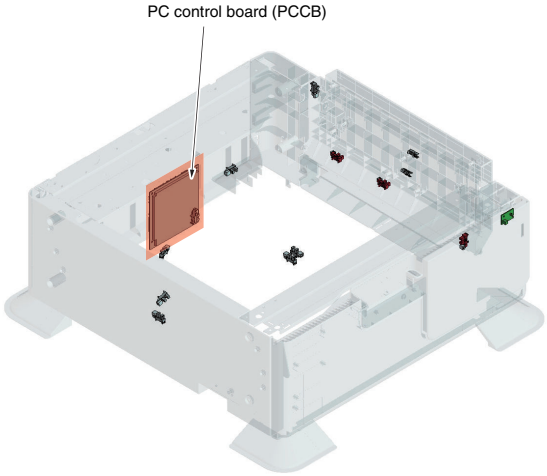

BOARD CONNECTOR LAYOUT DRAWING (PCCB)

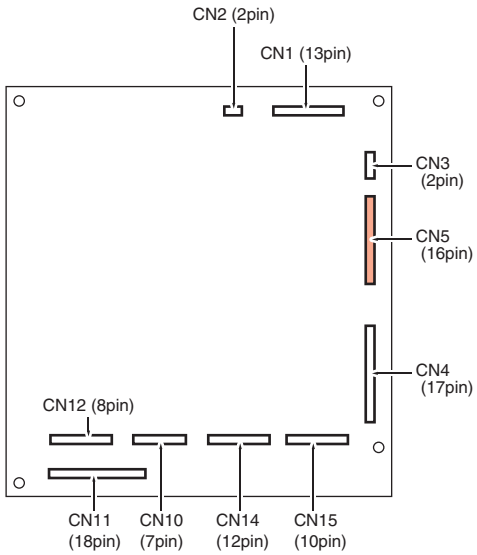

WIRING DIAGRAM

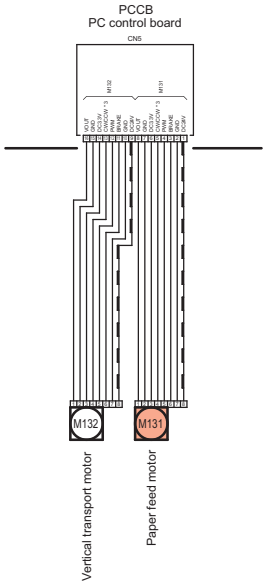

3. C0107

3.1 PC-110/PC-210

PARTS LAYOUT DRAWING/1

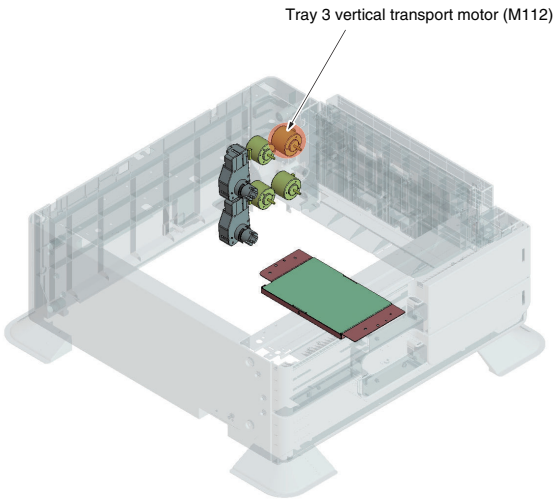

PARTS LAYOUT DRAWING/2

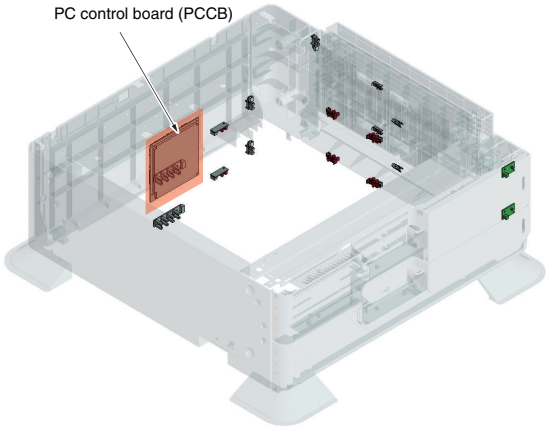

BOARD CONNECTOR LAYOUT DRAWING (PCCB) [PC-110]

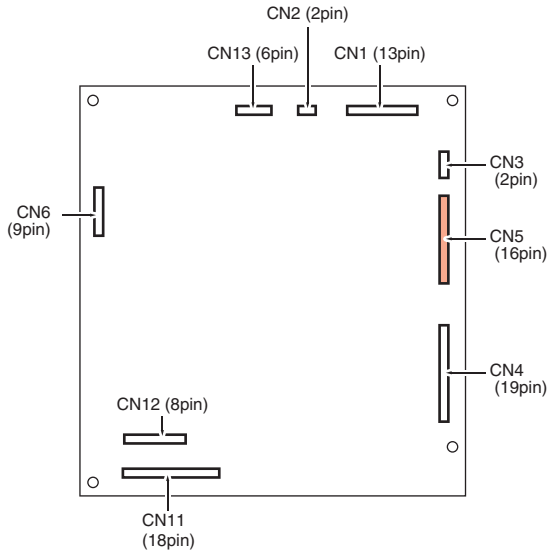

BOARD CONNECTOR LAYOUT DRAWING (PCCB) [PC-210]

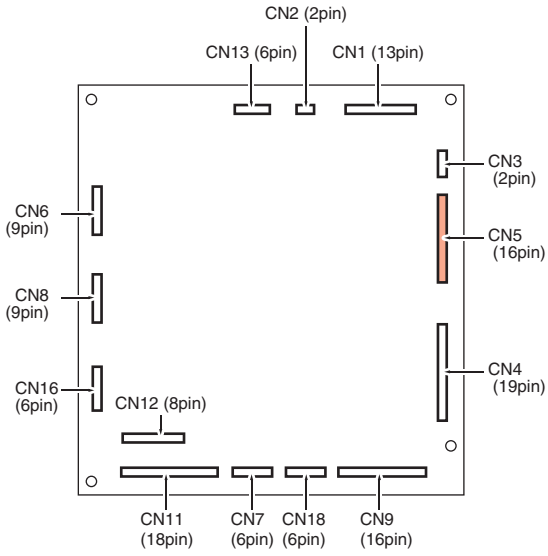

WIRING DIAGRAM

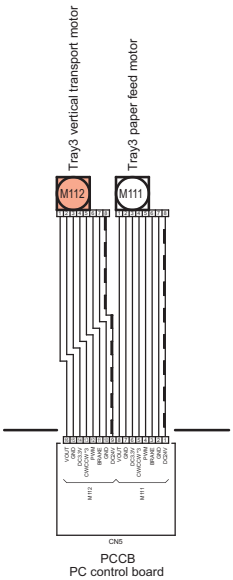

3.2 PC-410

PARTS LAYOUT DRAWING/1

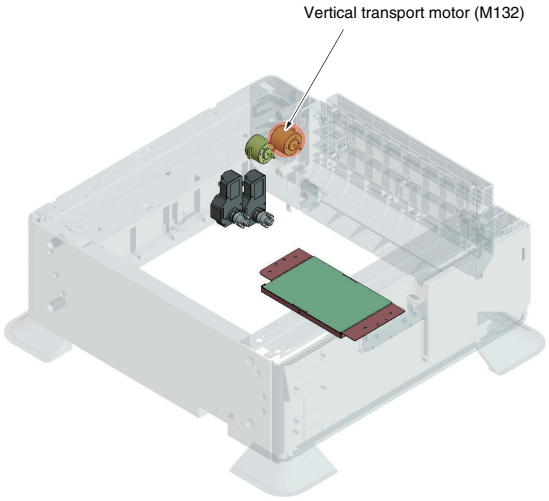

PARTS LAYOUT DRAWING/2

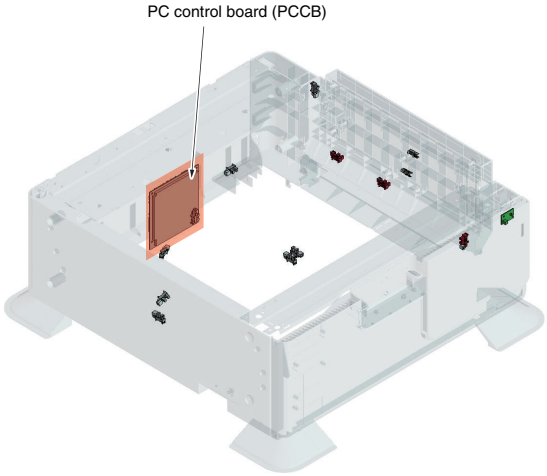

BOARD CONNECTOR LAYOUT DRAWING (PCCB)

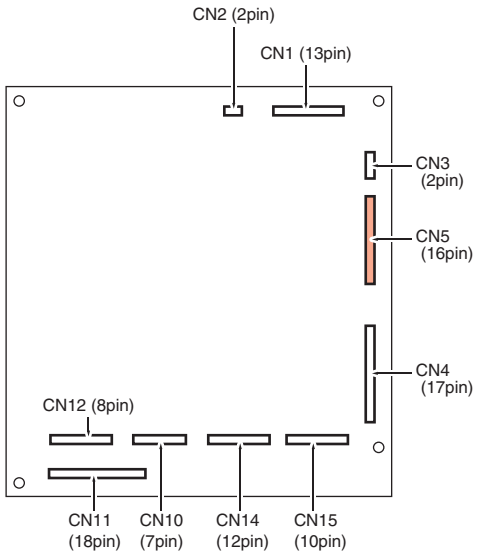

WIRING DIAGRAM

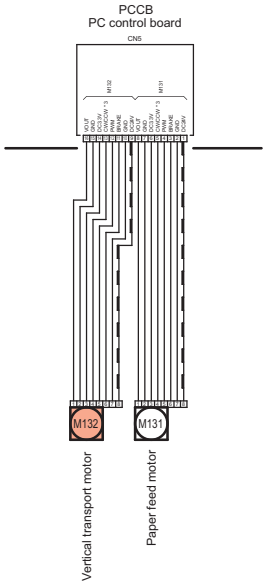

4. C0108

PARTS LAYOUT DRAWING/1

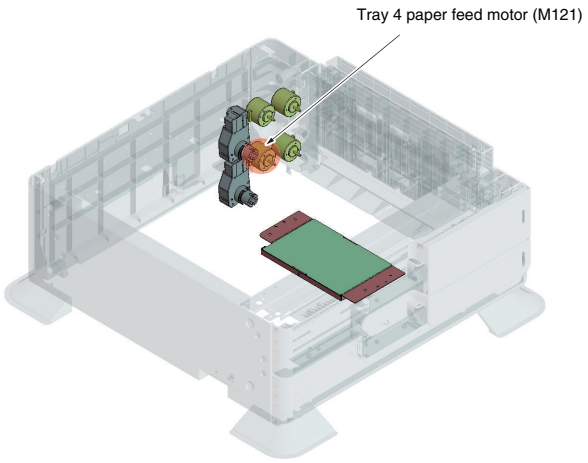

PARTS LAYOUT DRAWING/2

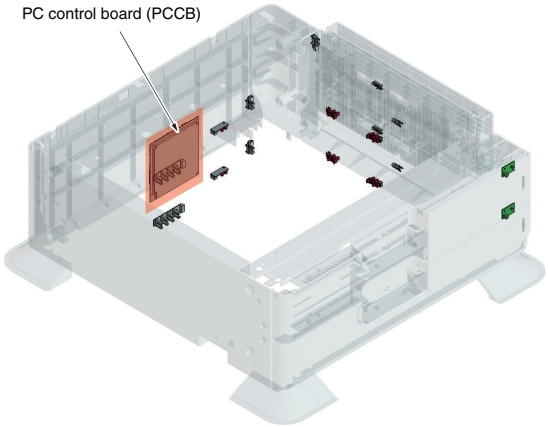

BOARD CONNECTOR LAYOUT DRAWING (PCCB)

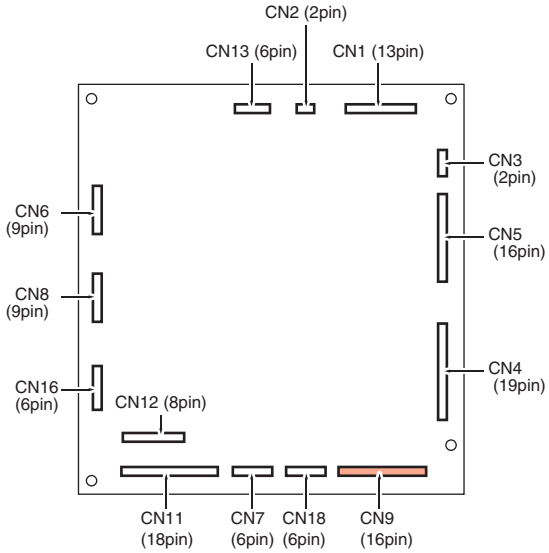

WIRING DIAGRAM

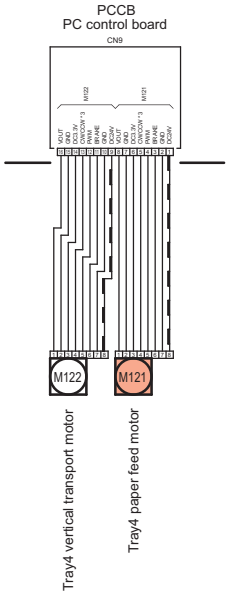

5. C0109

PARTS LAYOUT DRAWING/1

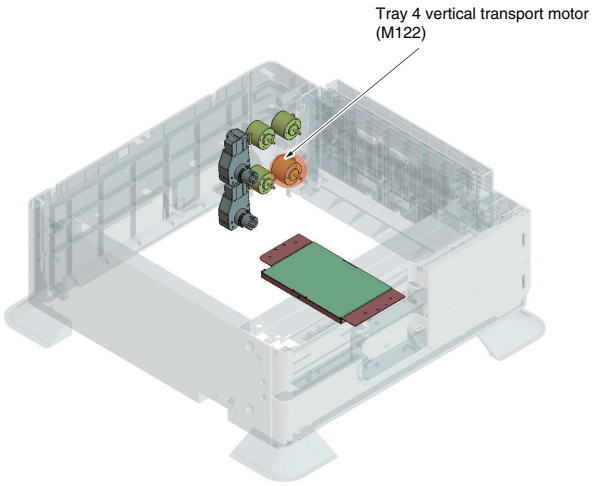

PARTS LAYOUT DRAWING/2

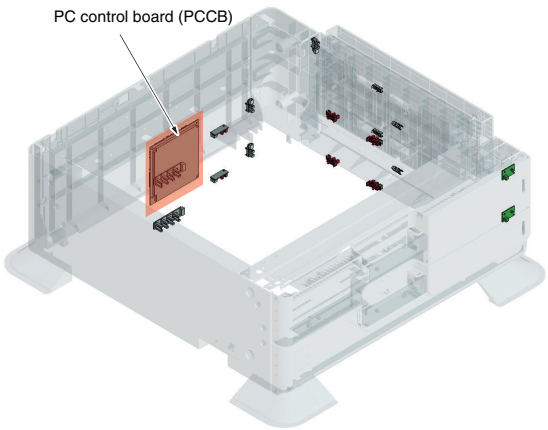

BOARD CONNECTOR LAYOUT DRAWING (PCCB)

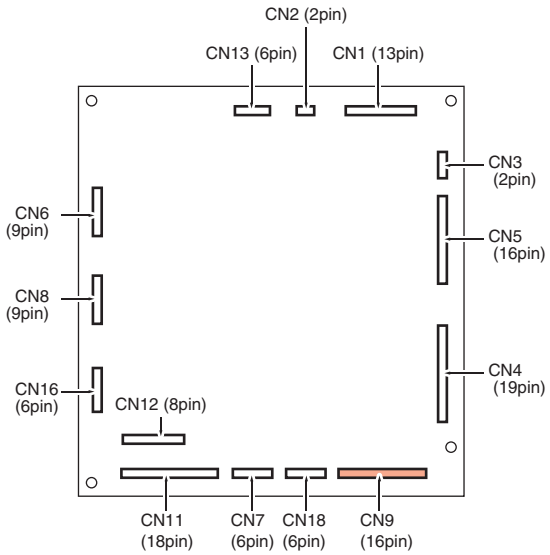

WIRING DIAGRAM

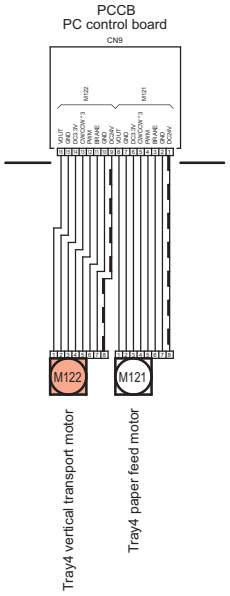

6. C0202

PARTS LAYOUT DRAWING/1

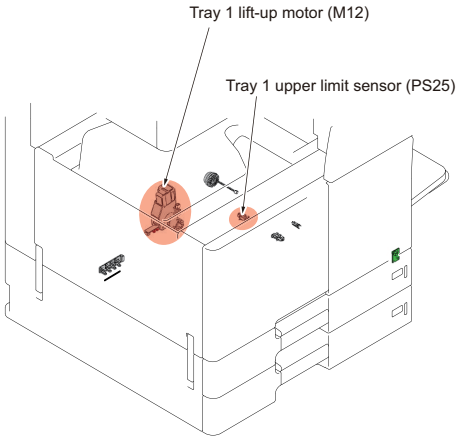

PARTS LAYOUT DRAWING/2

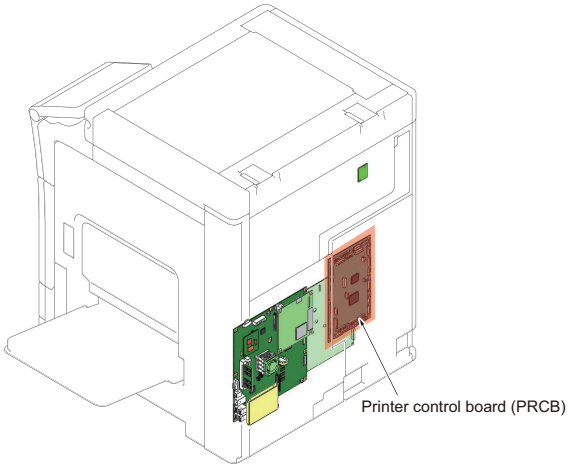

BOARD CONNECTOR LAYOUT DRAWING (PRCB)

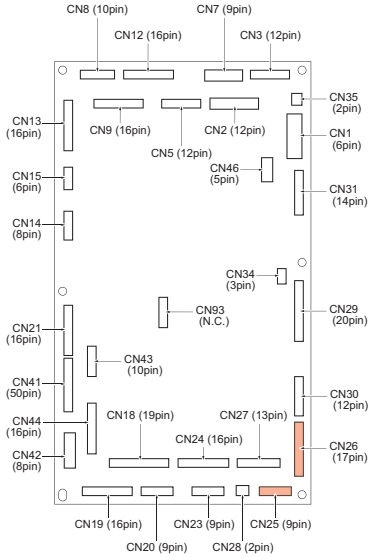

WIRING DIAGRAM

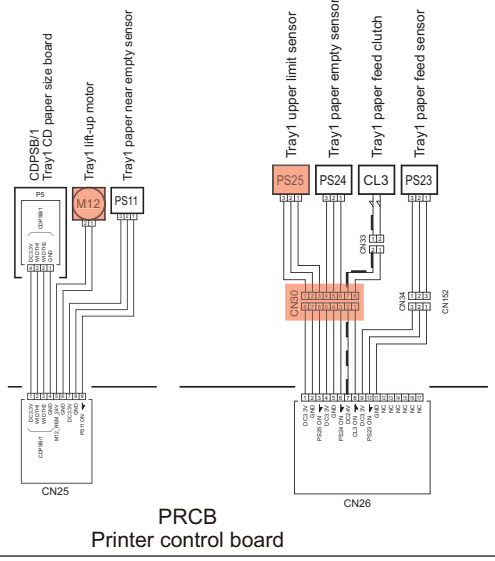

PRCB
Printer control board

RELAY CONNECTOR LAYOUT DRAWING

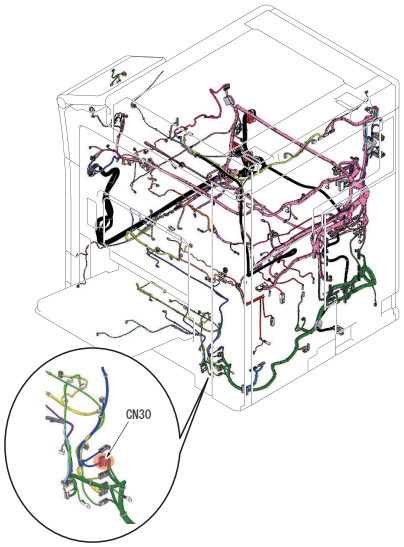

7. C0204

PARTS LAYOUT DRAWING/1

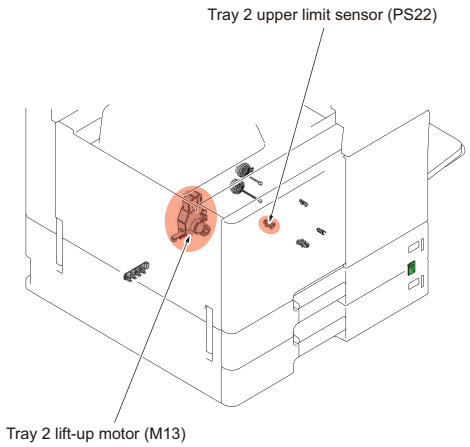

PARTS LAYOUT DRAWING/2

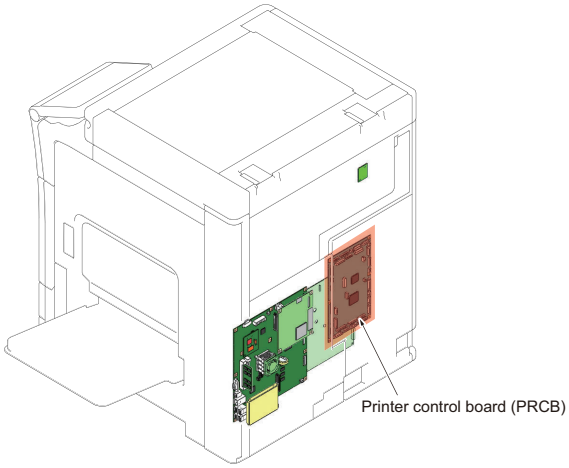

BOARD CONNECTOR LAYOUT DRAWING (PRCB)

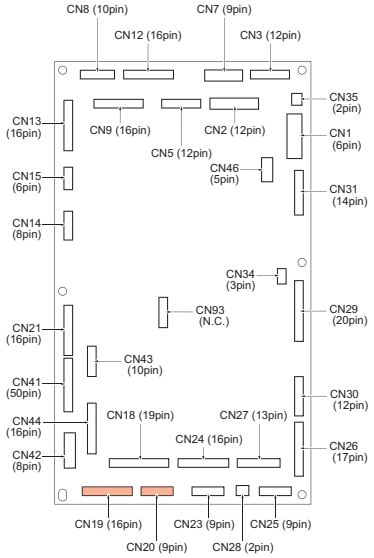

WIRING DIAGRAM

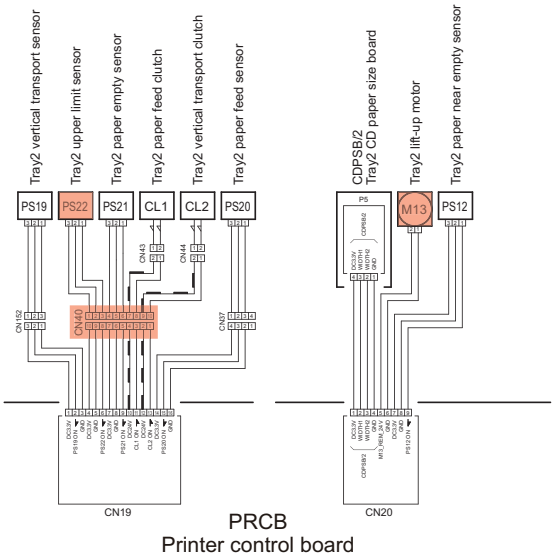

RELAY CONNECTOR LAYOUT DRAWING

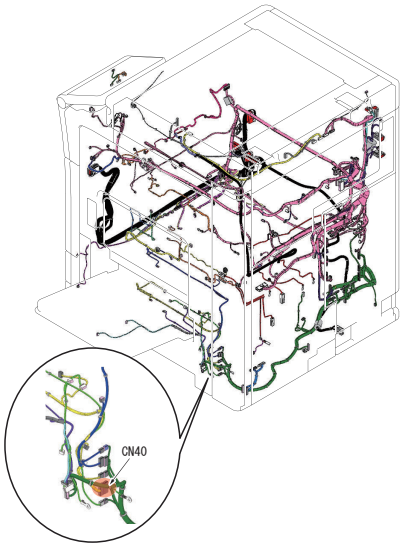

8. C0206

PARTS LAYOUT DRAWING/1

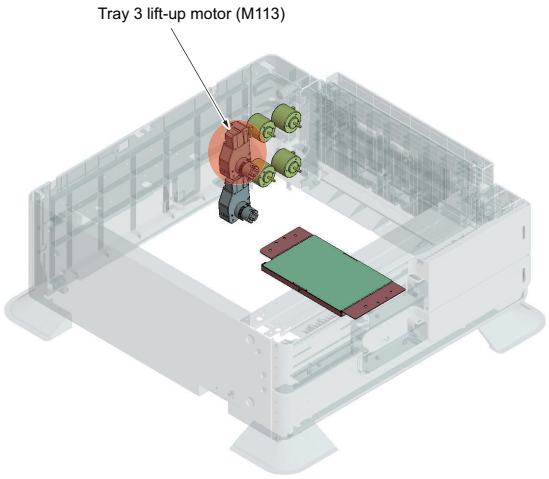

PARTS LAYOUT DRAWING/2

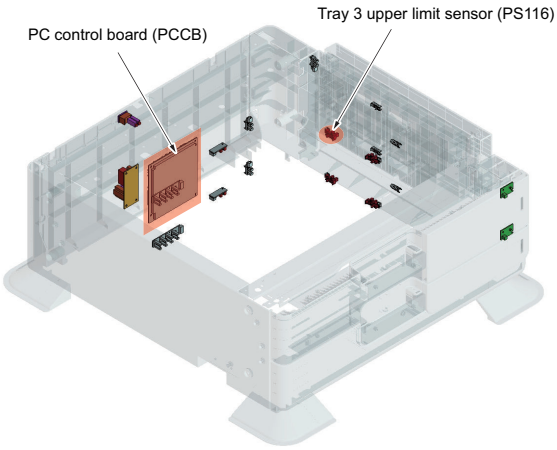

PARTS LAYOUT DRAWING/3

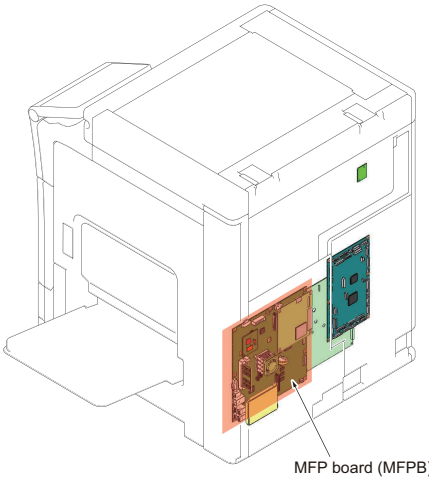

BOARD CONNECTOR LAYOUT DRAWING (PCCB) [PC-110]

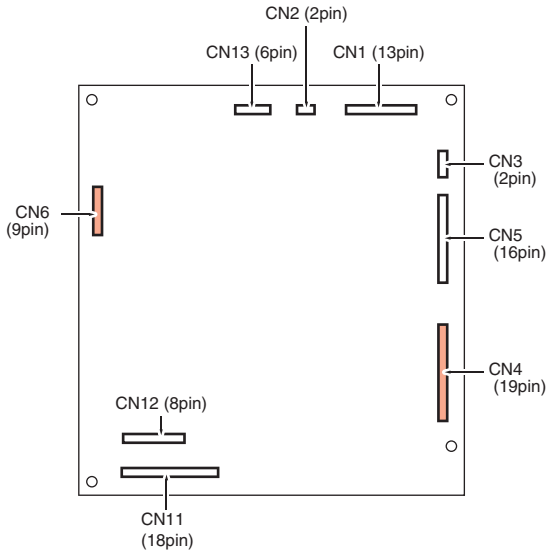

BOARD CONNECTOR LAYOUT DRAWING (PCCB) [PC-210]

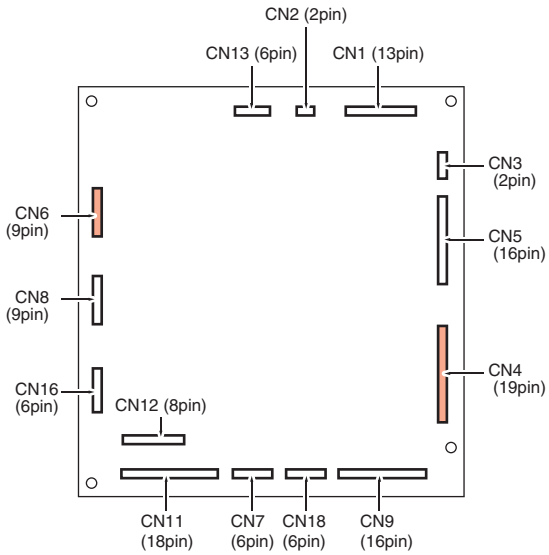

WIRING DIAGRAM

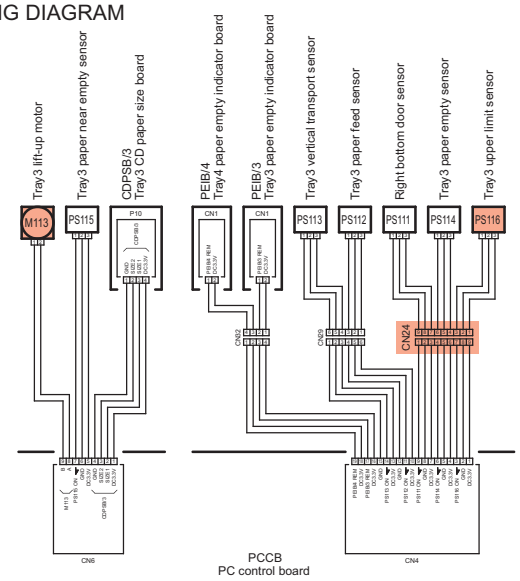

9. C0208

PARTS LAYOUT DRAWING/1

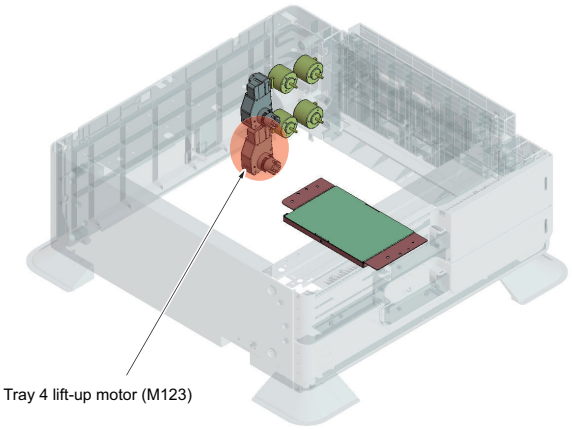

PARTS LAYOUT DRAWING/2

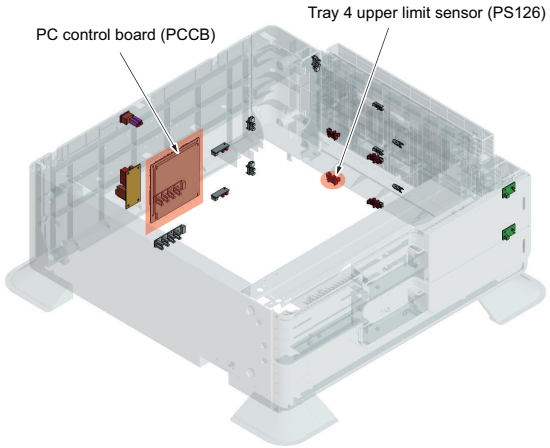

PARTS LAYOUT DRAWING/3

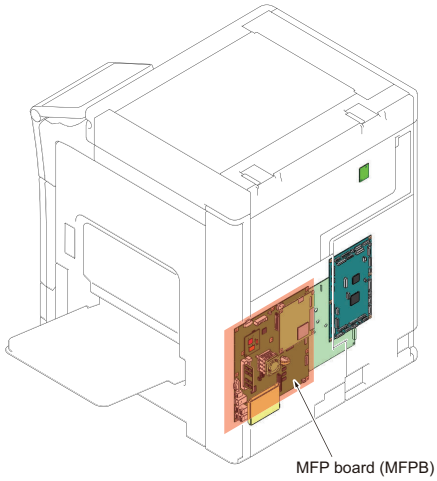

BOARD CONNECTOR LAYOUT DRAWING (PCCB)

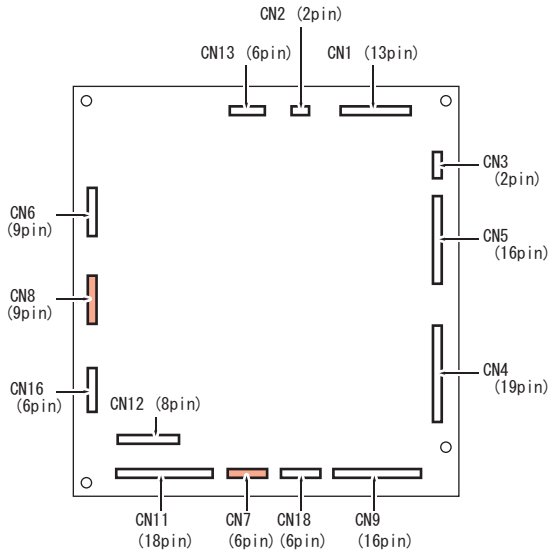

WIRING DIAGRAM

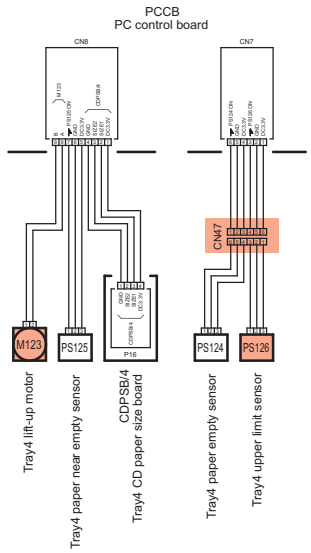

10. C0210

PARTS LAYOUT DRAWING/1

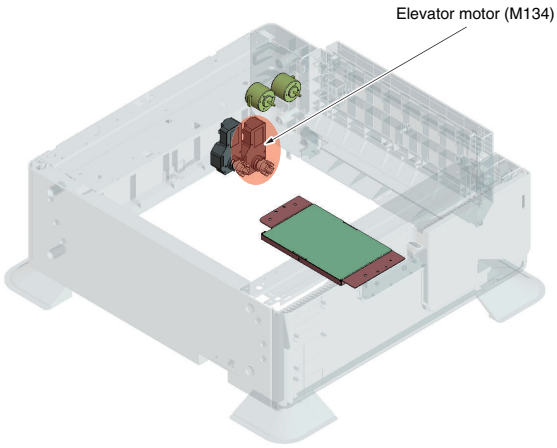

PARTS LAYOUT DRAWING/2

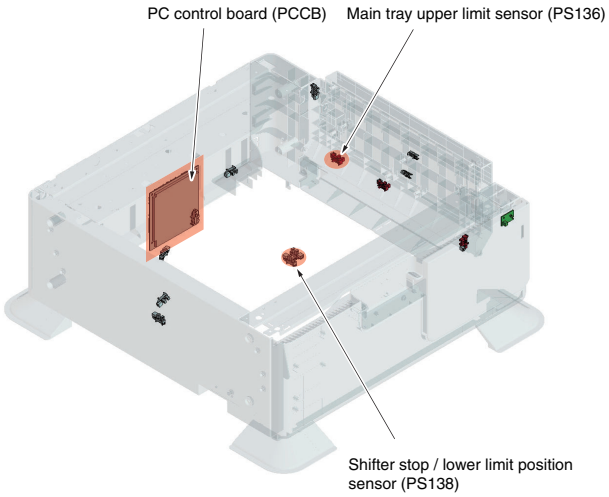

BOARD CONNECTOR LAYOUT DRAWING (PCCB)

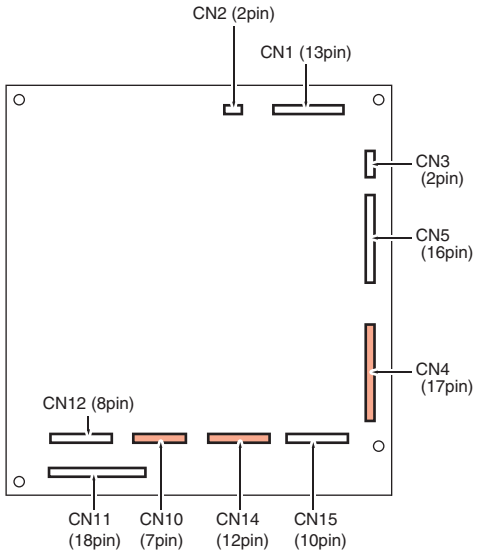

WIRING DIAGRAM

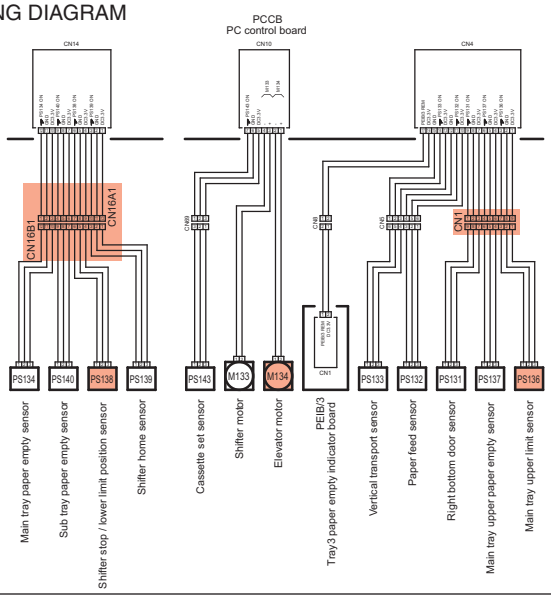

11. C0211

PARTS LAYOUT DRAWING/1

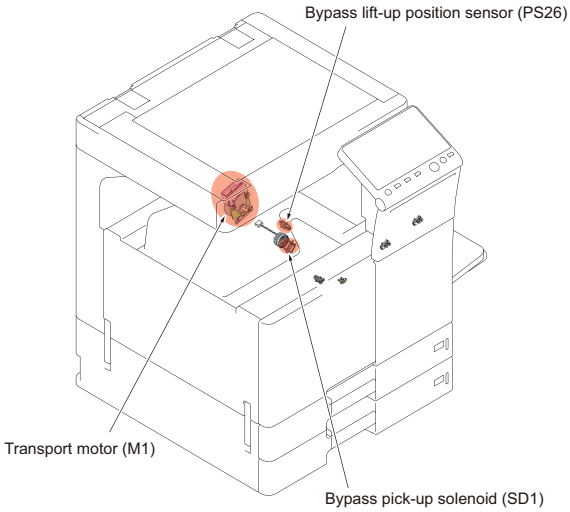

PARTS LAYOUT DRAWING/2

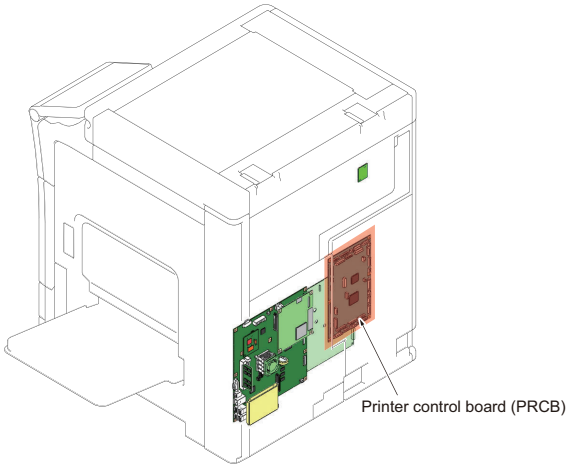

BOARD CONNECTOR LAYOUT DRAWING (PRCB)

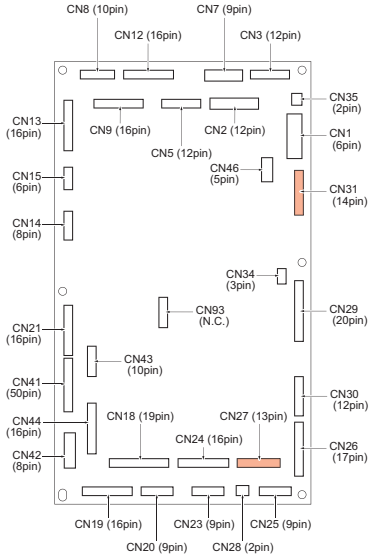

WIRING DIAGRAM/1

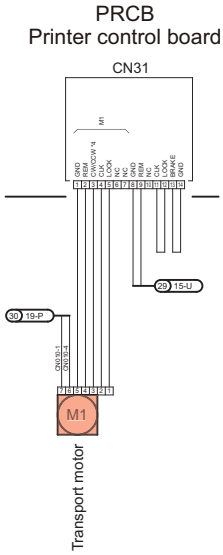

WIRING DIAGRAM/2

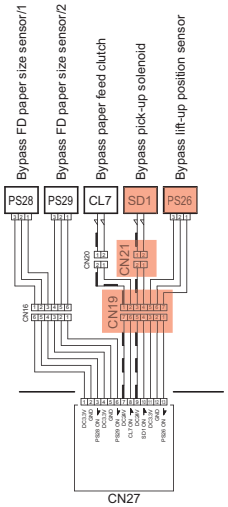

RELAY CONNECTOR LAYOUT DRAWING

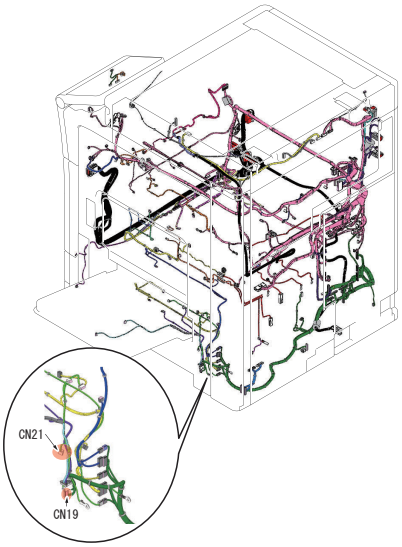

12. C0214

PARTS LAYOUT DRAWING/1

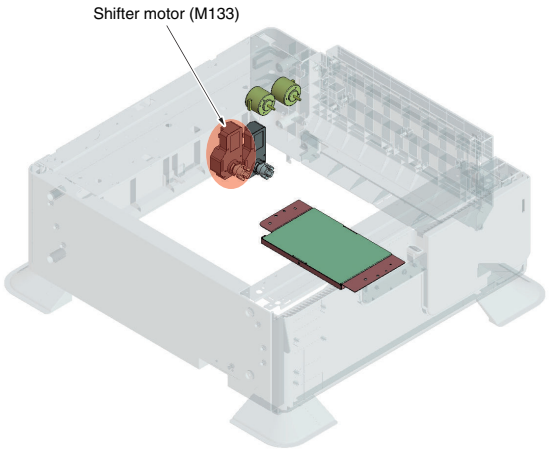

PARTS LAYOUT DRAWING/2

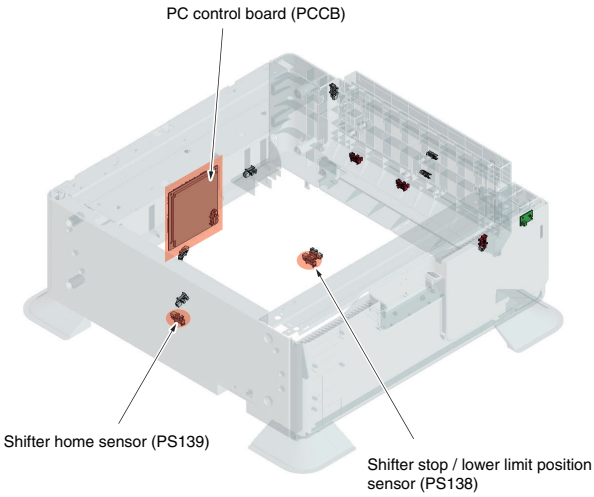

BOARD CONNECTOR LAYOUT DRAWING (PCCB)

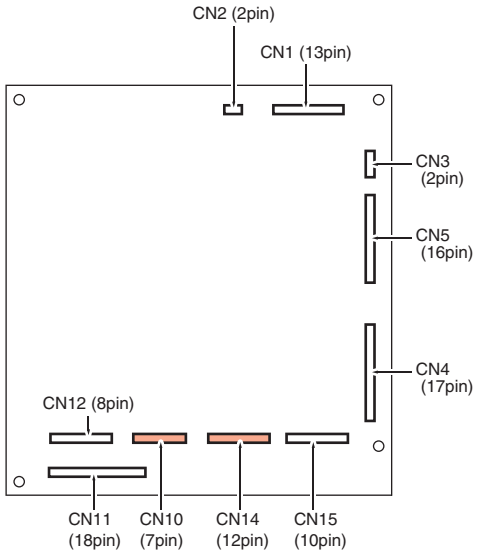

WIRING DIAGRAM

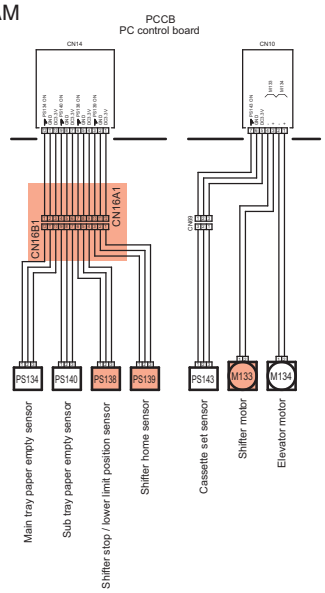

13. C1004, CC155

PARTS LAYOUT DRAWING/1 [FS-533]

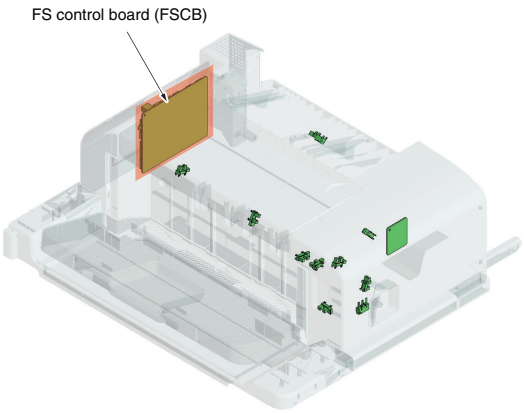

PARTS LAYOUT DRAWING/2 [FS-534]

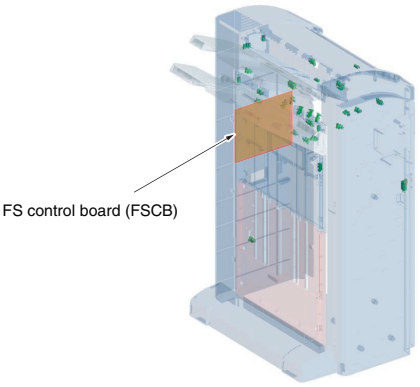

PARTS LAYOUT DRAWING/3 [JS-506]

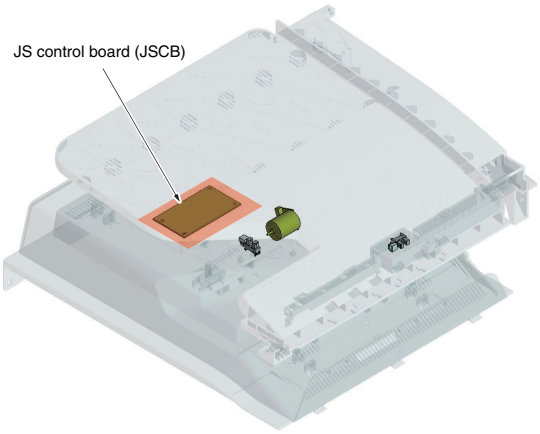

14. C1081

PARTS LAYOUT DRAWING/1

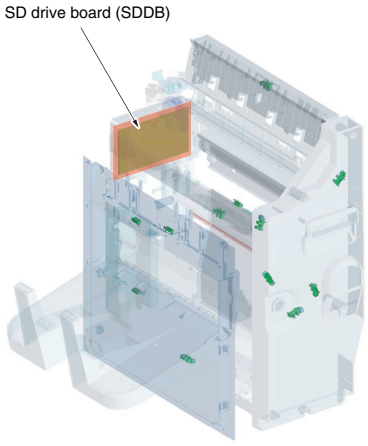

PARTS LAYOUT DRAWING/2

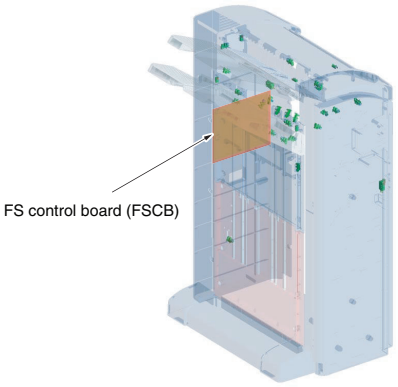

15. C1102

15.1 FS-533

PARTS LAYOUT DRAWING/1

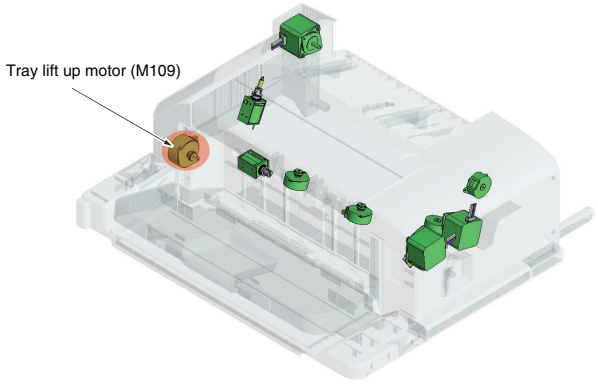

PARTS LAYOUT DRAWING/2

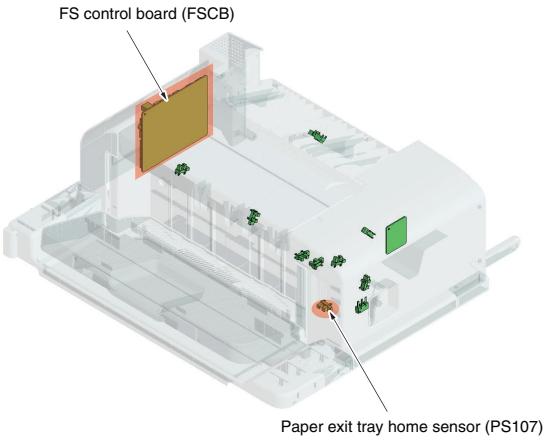

BOARD CONNECTOR LAYOUT DRAWING (FSCB)

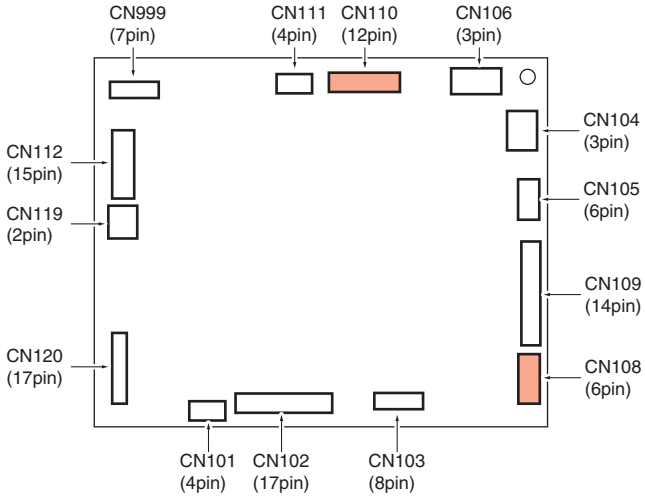

WIRING DIAGRAM

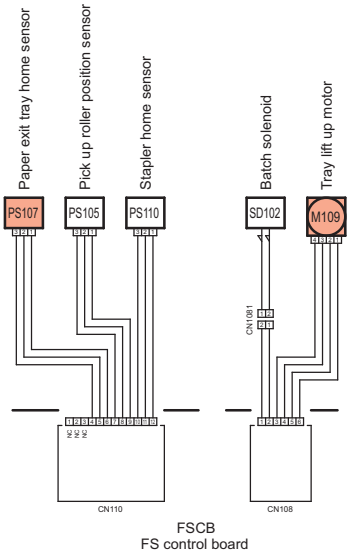

15.2 FS-534

PARTS LAYOUT DRAWING/1

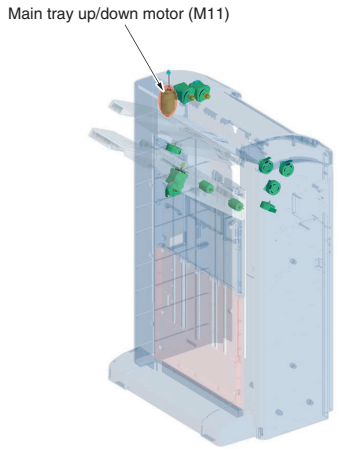

PARTS LAYOUT DRAWING/2

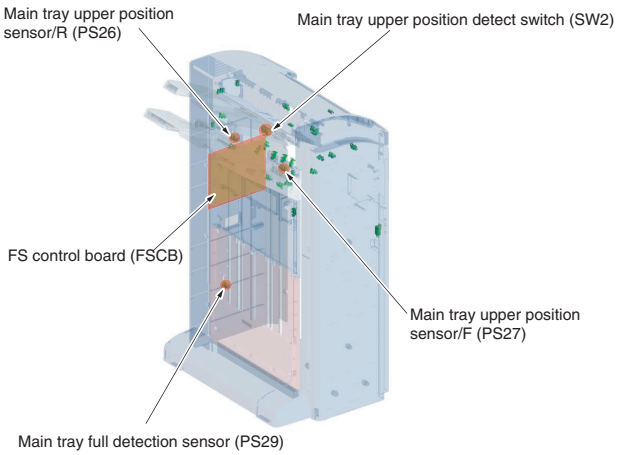

16. C1103

16.1 FS-533

PARTS LAYOUT DRAWING/1

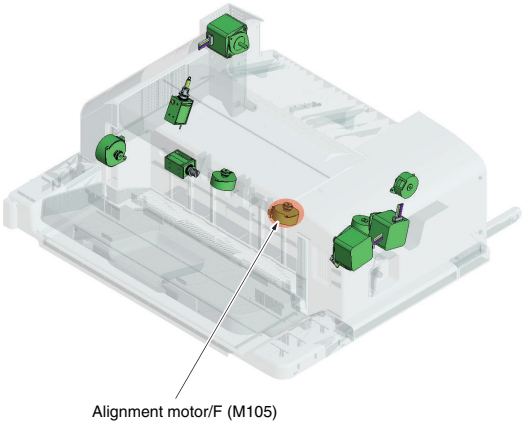

PARTS LAYOUT DRAWING/2

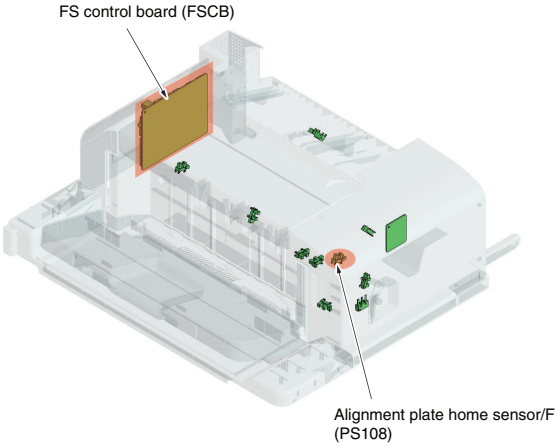

BOARD CONNECTOR LAYOUT DRAWING (FSCB)

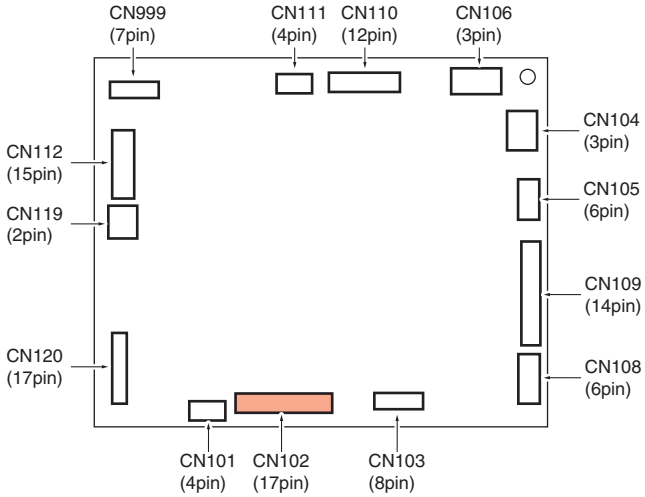

WIRING DIAGRAM

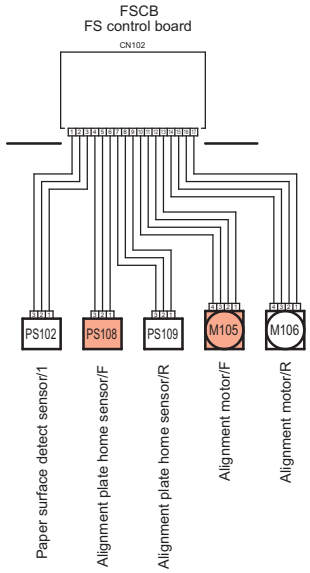

16.2 FS-534

PARTS LAYOUT DRAWING/1

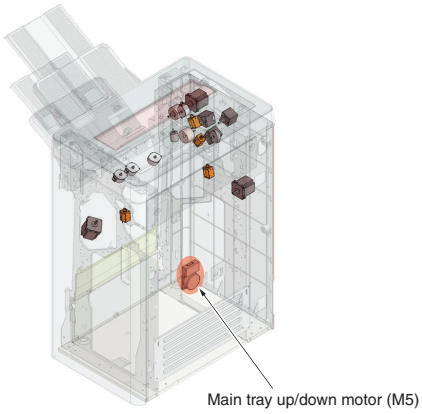

PARTS LAYOUT DRAWING/2

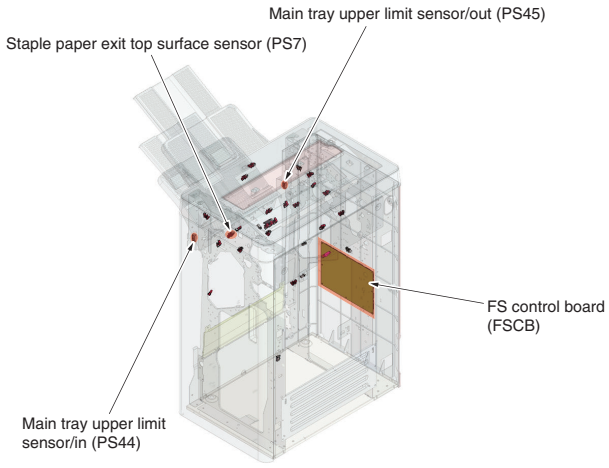

17. C1105

17.1 FS-534

PARTS LAYOUT DRAWING/1

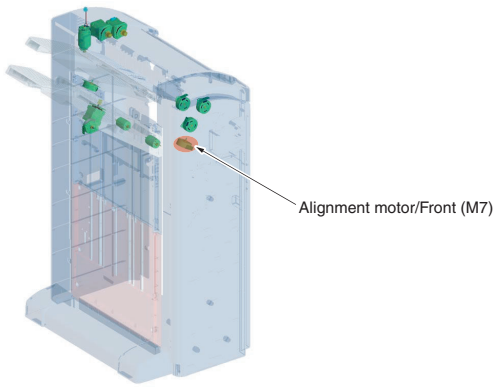

PARTS LAYOUT DRAWING/2

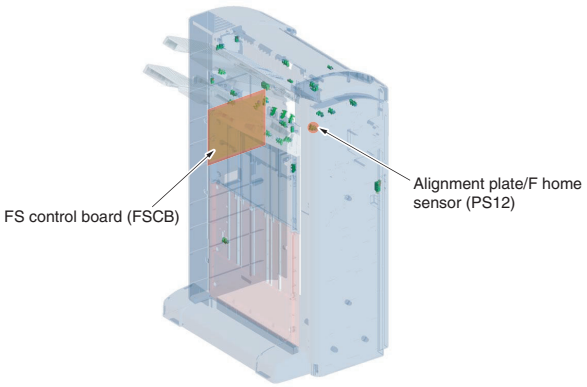

BOARD CONNECTOR LAYOUT DRAWING (FSCB)

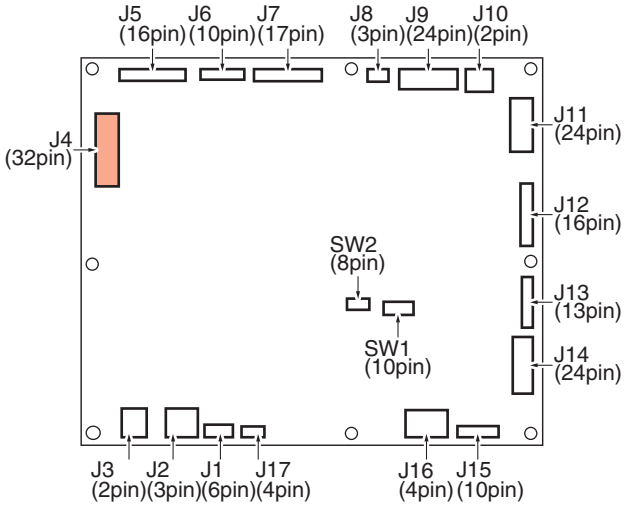

WIRING DIAGRAM

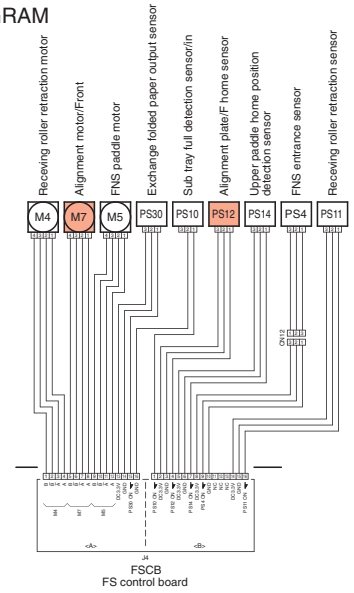

18. C1106

18.1 FS-533

PARTS LAYOUT DRAWING/1

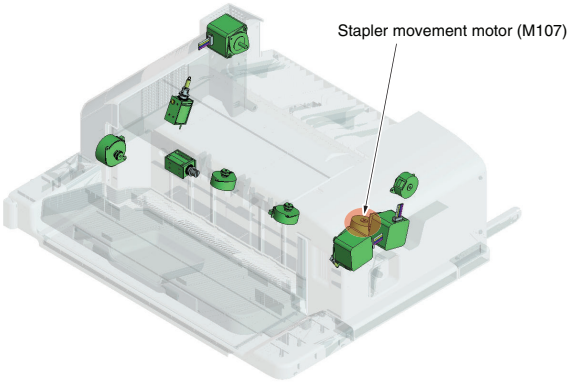

PARTS LAYOUT DRAWING/2

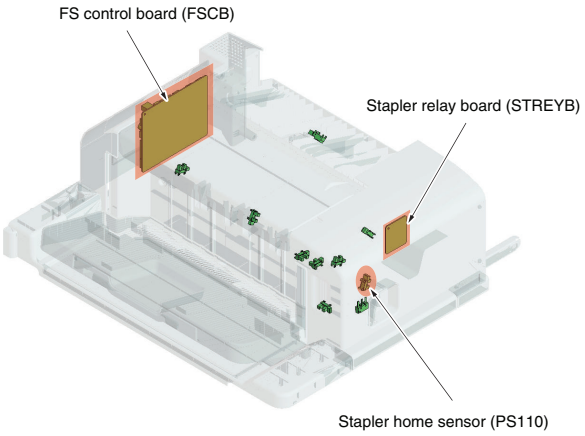

BOARD CONNECTOR LAYOUT DRAWING (STREYB)

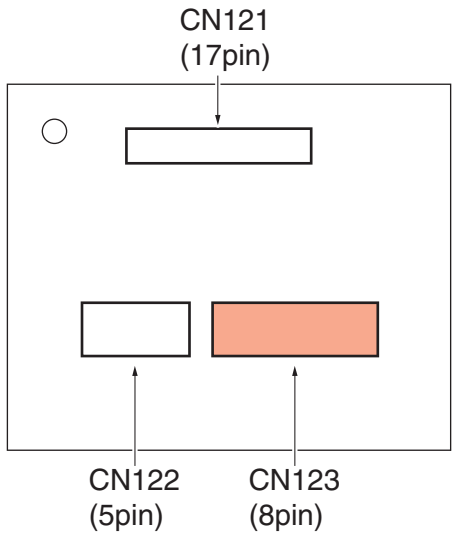

BOARD CONNECTOR LAYOUT DRAWING (FSCB)

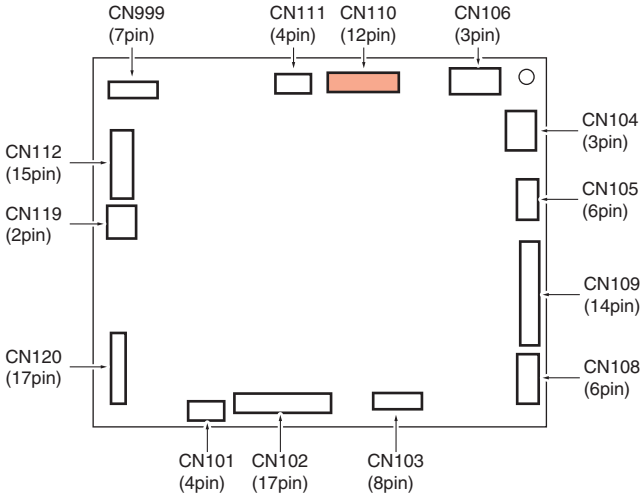

WIRING DIAGRAM

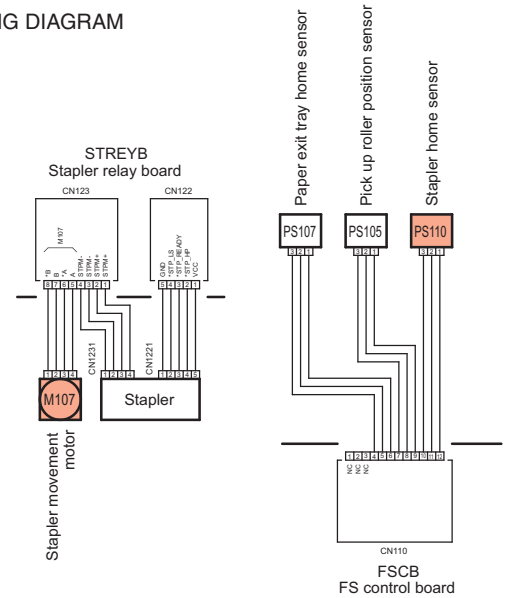

18.2 FS-534

PARTS LAYOUT DRAWING/1

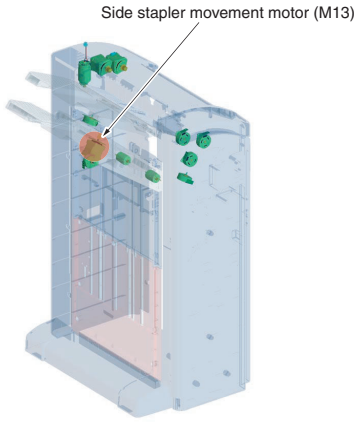

PARTS LAYOUT DRAWING/2

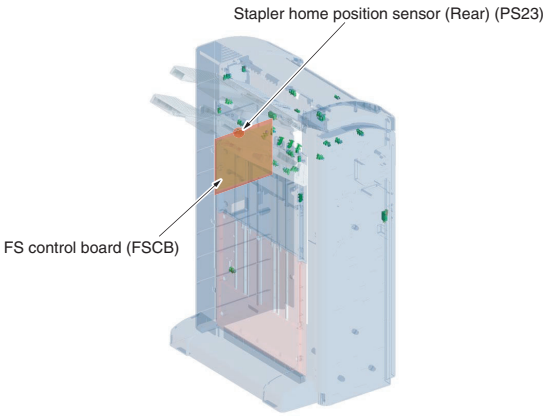

BOARD CONNECTOR LAYOUT DRAWING (FSCB)

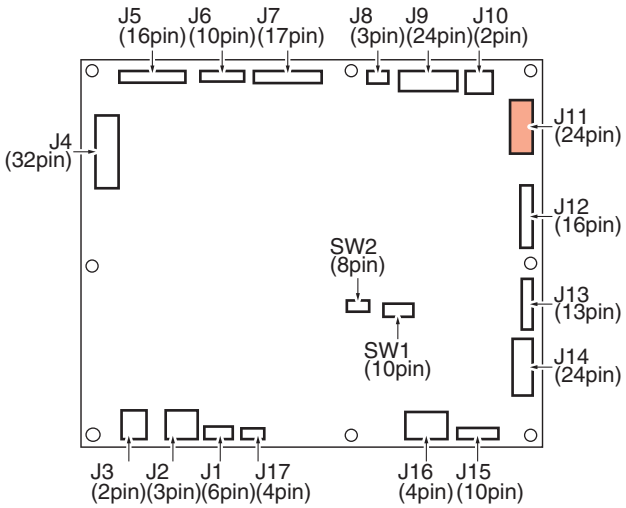

WIRING DIAGRAM

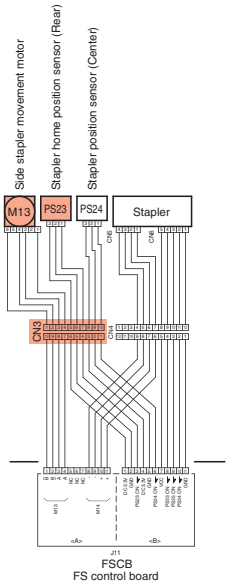

19. C1109

19.1 FS-533

PARTS LAYOUT DRAWING

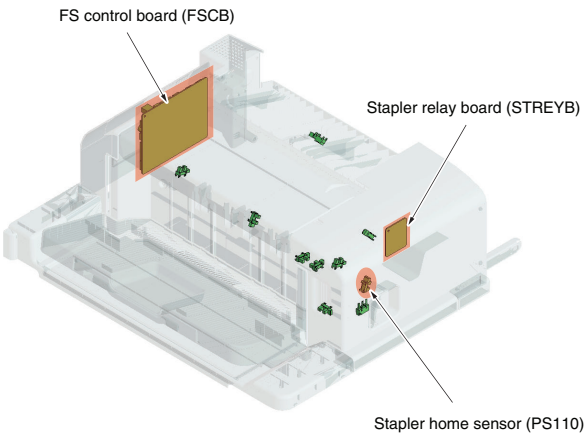

BOARD CONNECTOR LAYOUT DRAWING (STREYB)

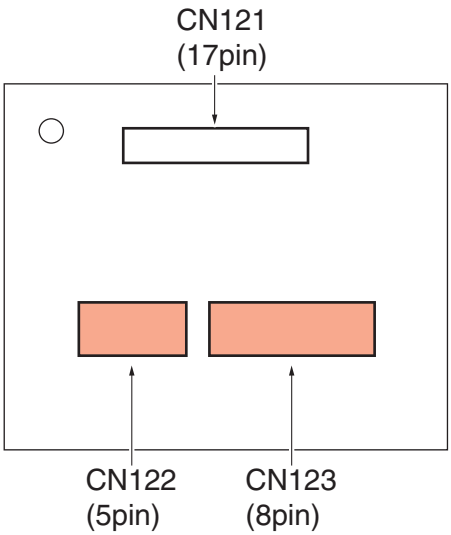

BOARD CONNECTOR LAYOUT DRAWING (FSCB)

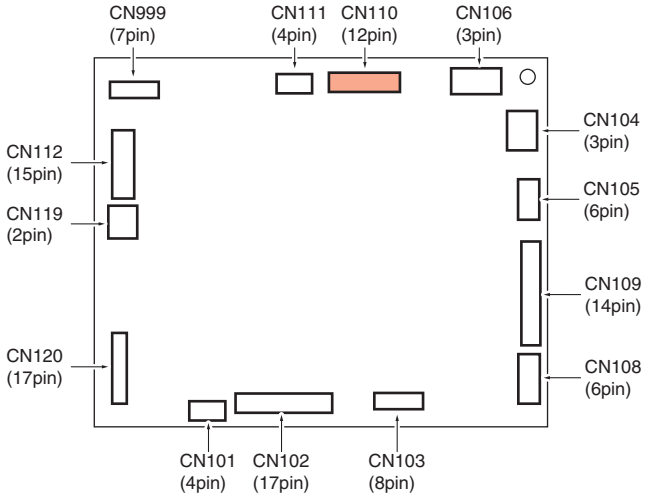

WIRING DIAGRAM

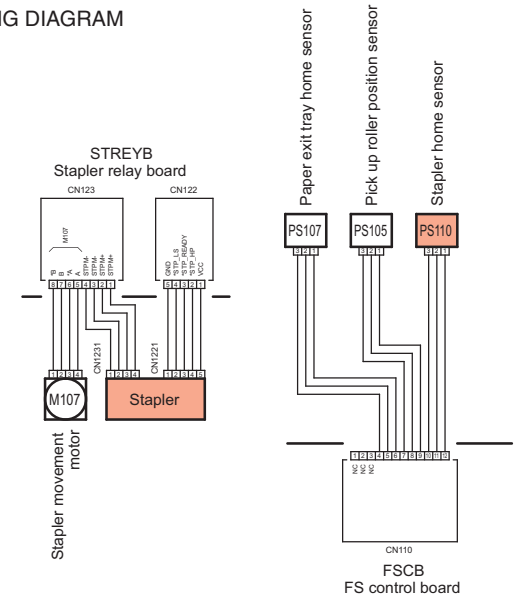

19.2 FS-534

PARTS LAYOUT DRAWING

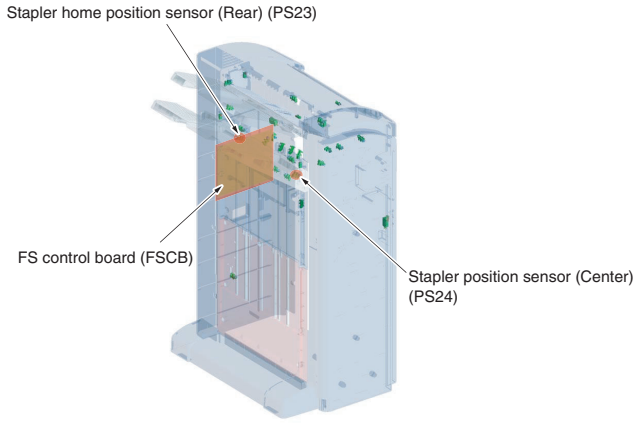

BOARD CONNECTOR LAYOUT DRAWING (FSCB)

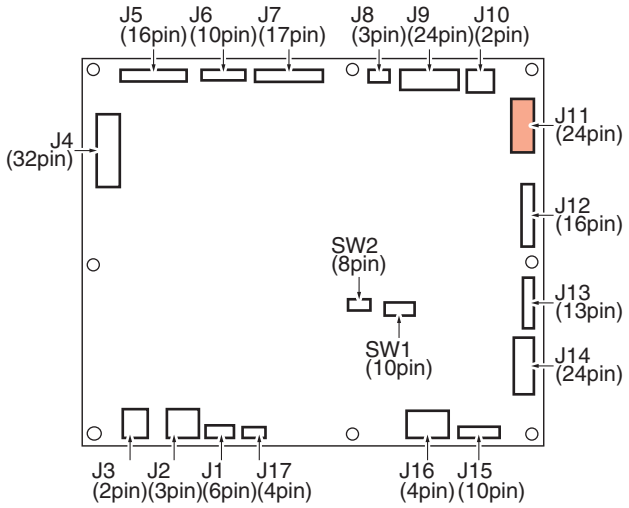

WIRING DIAGRAM

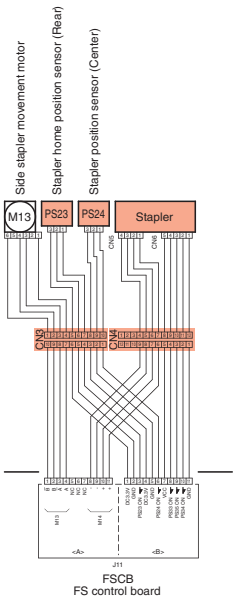

20. C1112

PARTS LAYOUT DRAWING/1

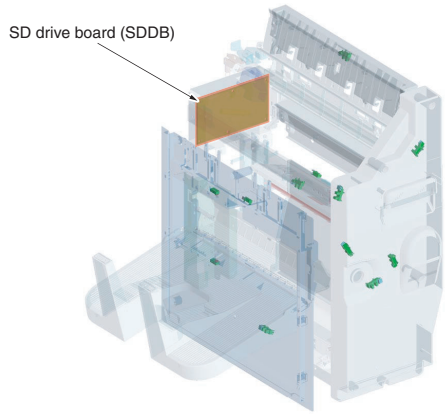

PARTS LAYOUT DRAWING/2

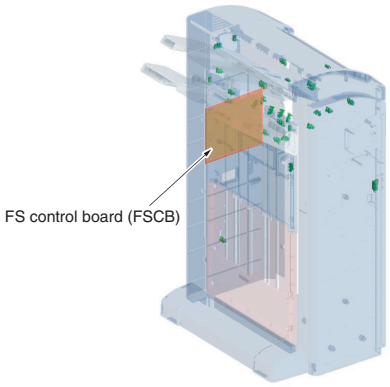

BOARD CONNECTOR LAYOUT DRAWING (SDDB)

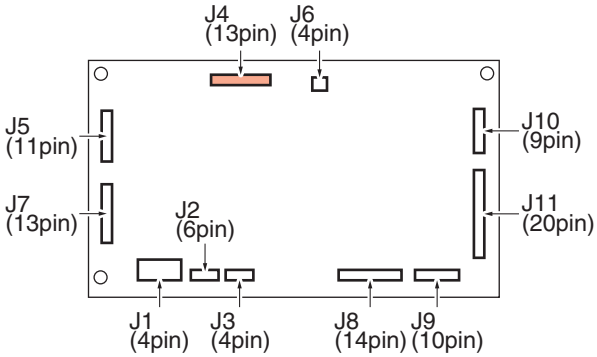

WIRING DIAGRAM

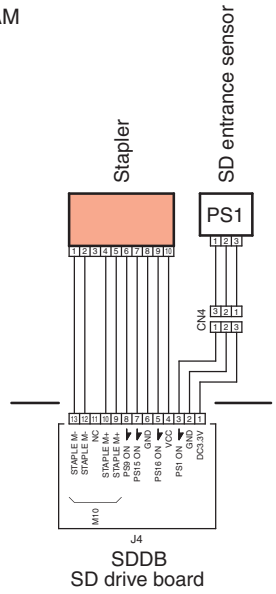

21. C1113

PARTS LAYOUT DRAWING/1

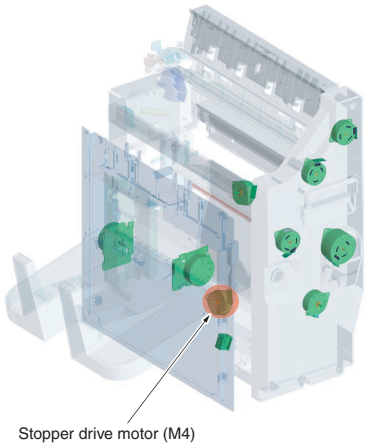

PARTS LAYOUT DRAWING/2

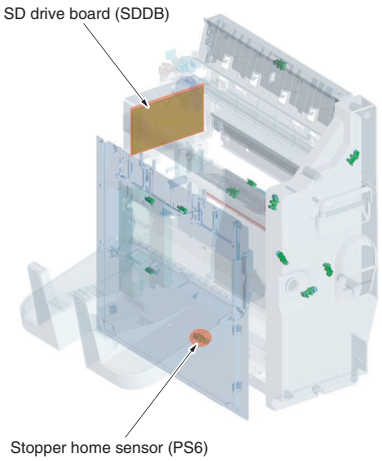

PARTS LAYOUT DRAWING/3

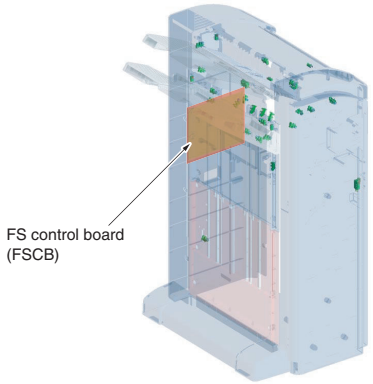

BOARD CONNECTOR LAYOUT DRAWING (SDDB)

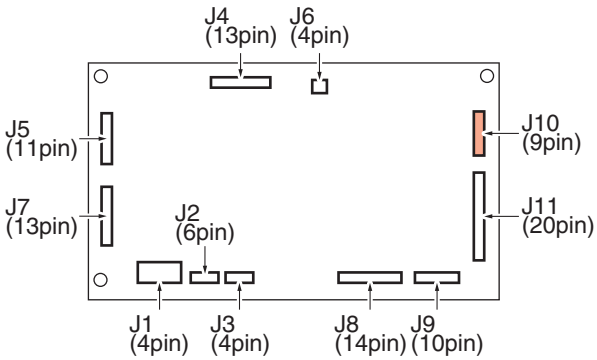

WIRING DIAGRAM

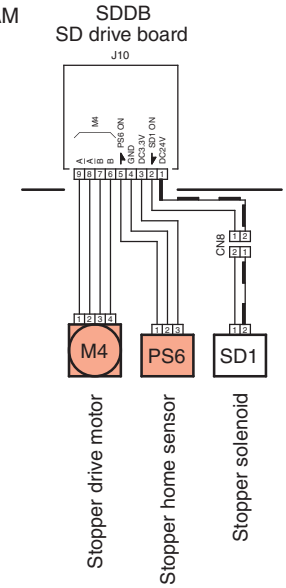

22. C1114

PARTS LAYOUT DRAWING/1

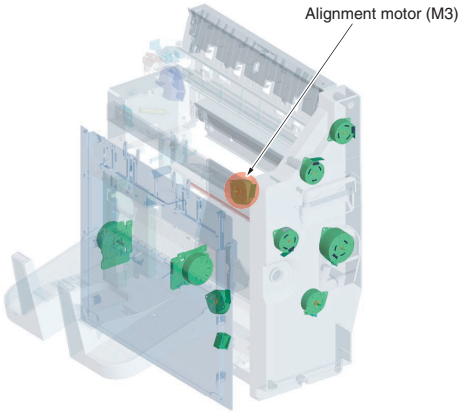

PARTS LAYOUT DRAWING/2

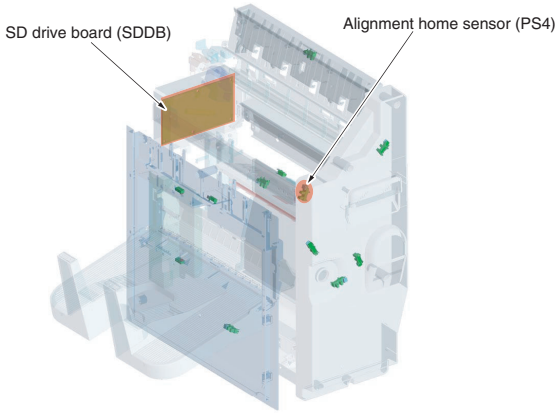

PARTS LAYOUT DRAWING/3

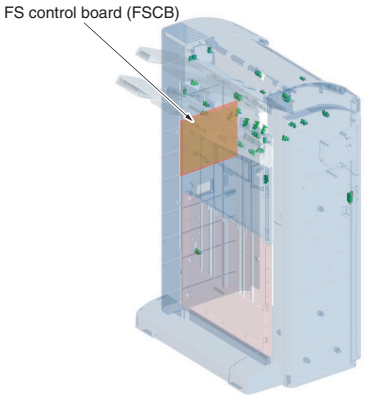

BOARD CONNECTOR LAYOUT DRAWING (SDDB)

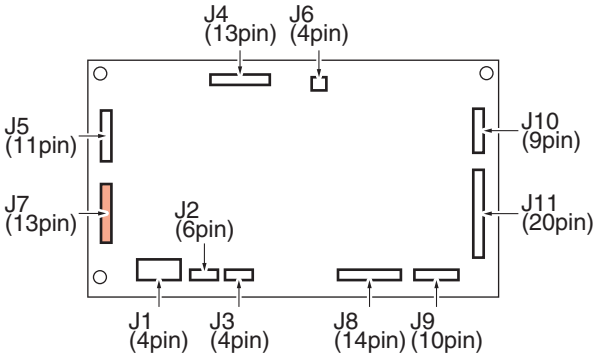

WIRING DIAGRAM

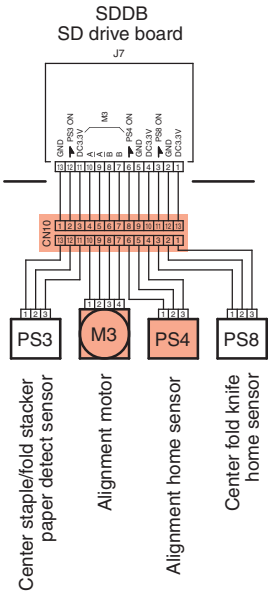

23. C1115

PARTS LAYOUT DRAWING/1

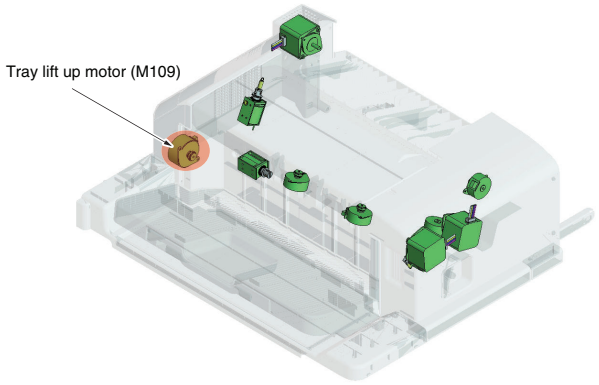

PARTS LAYOUT DRAWING/2

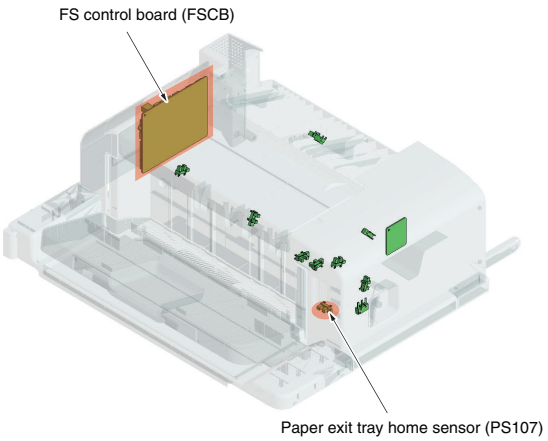

BOARD CONNECTOR LAYOUT DRAWING (FSCB)

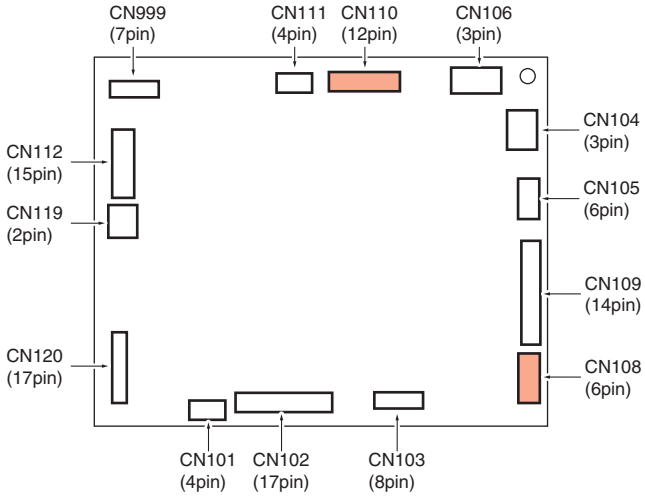

WIRING DIAGRAM

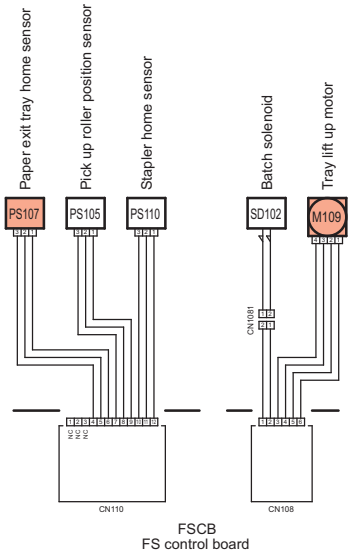

24. C1132

24.1 FS-533/PK-519

PARTS LAYOUT DRAWING/1

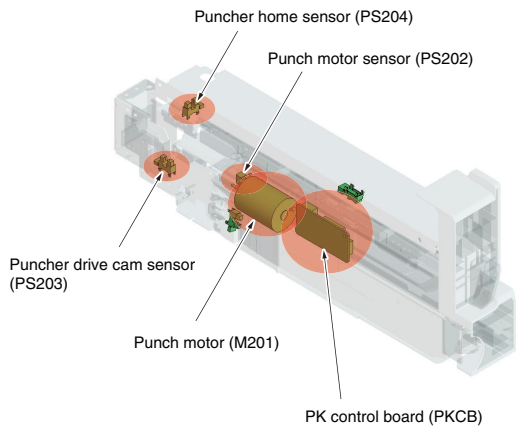

PARTS LAYOUT DRAWING/2

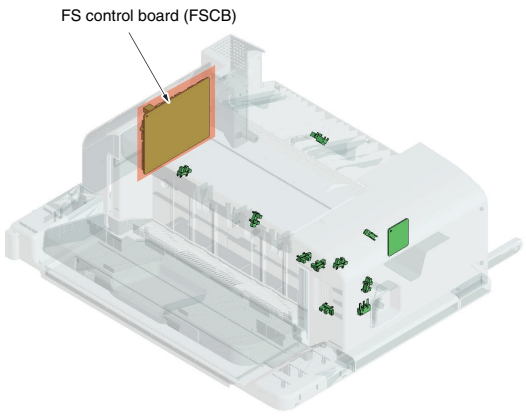

BOARD CONNECTOR LAYOUT DRAWING (PKCB)

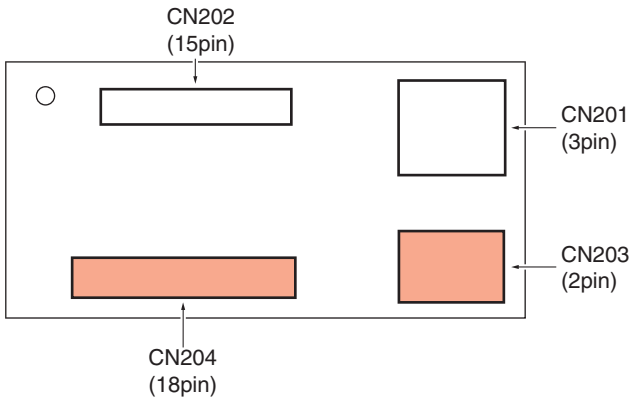

WIRING DIAGRAM

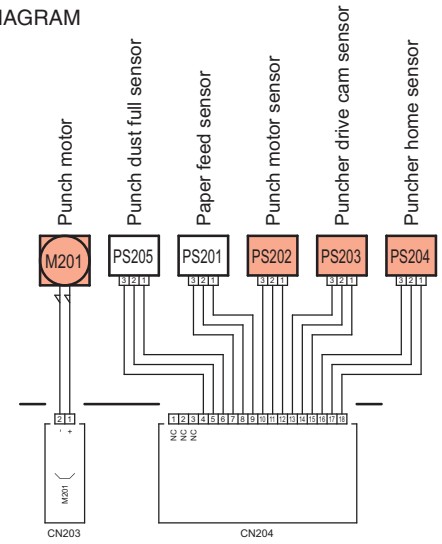

24.2 FS-534/PK-520

PARTS LAYOUT DRAWING/1

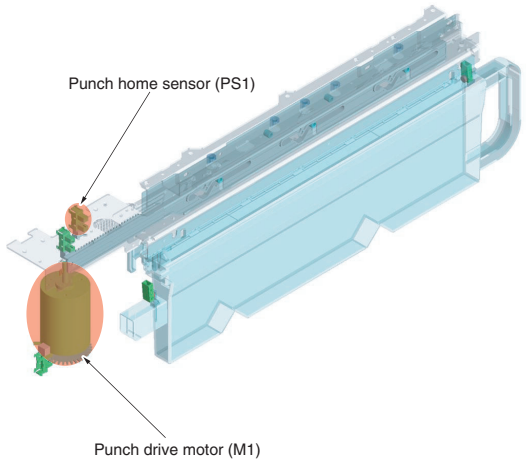

PARTS LAYOUT DRAWING/2

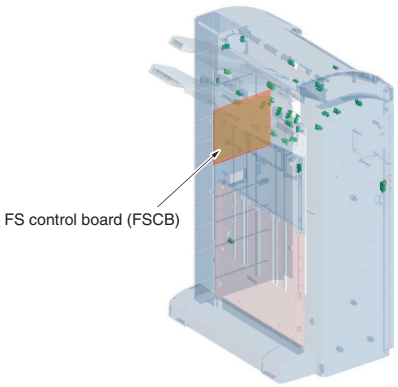

BOARD CONNECTOR LAYOUT DRAWING (FSCB)

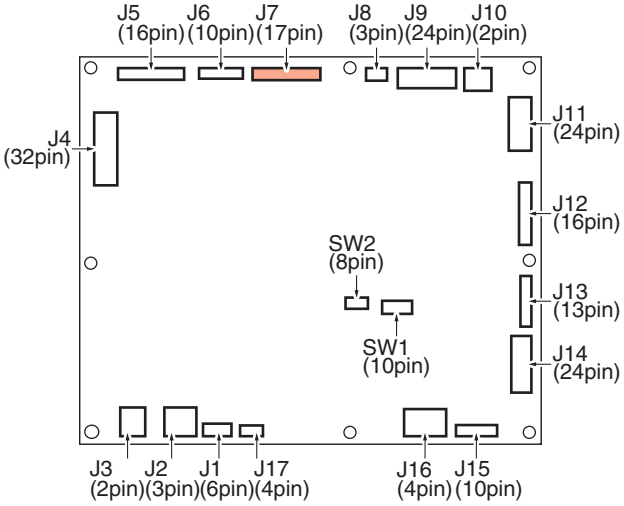

WIRING DIAGRAM

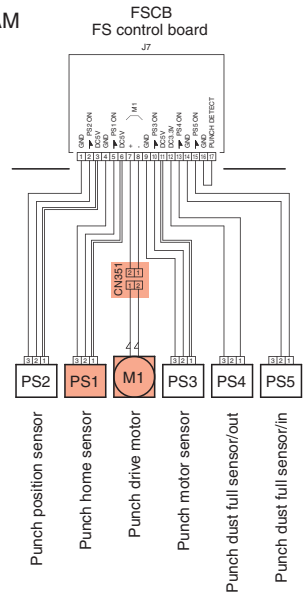

25. C1140

25.1 FS-533

PARTS LAYOUT DRAWING/1

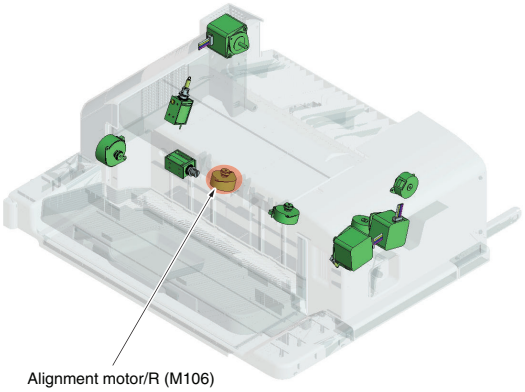

PARTS LAYOUT DRAWING/2

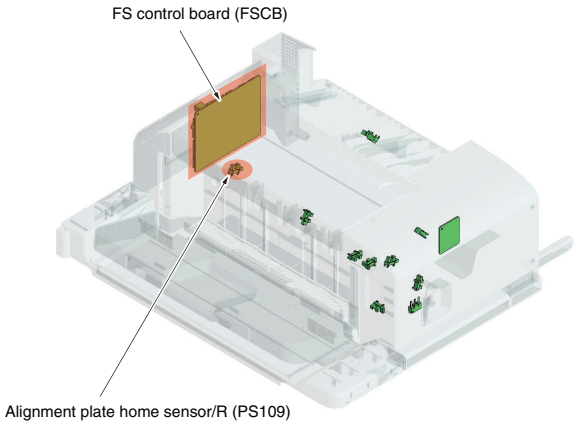

BOARD CONNECTOR LAYOUT DRAWING (FSCB)

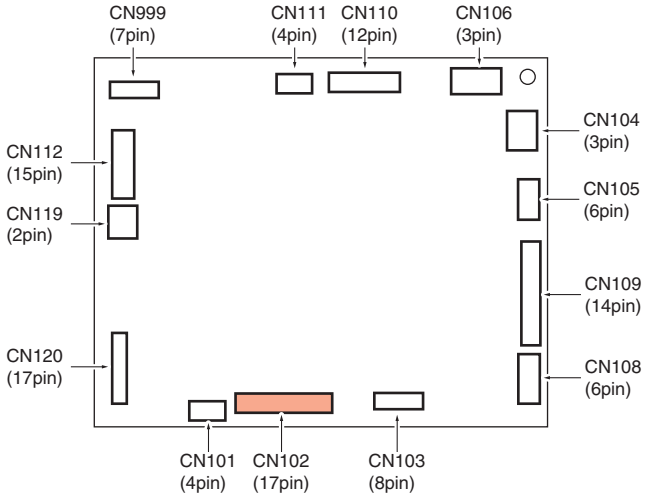

WIRING DIAGRAM

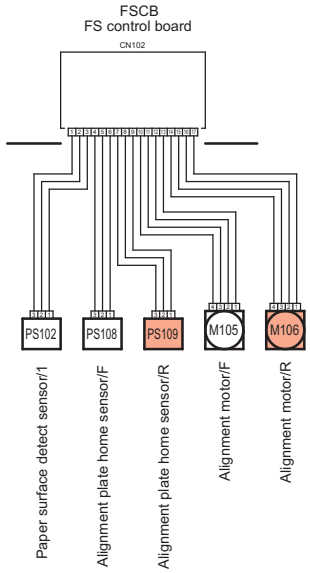

25.2 FS-534

PARTS LAYOUT DRAWING/1

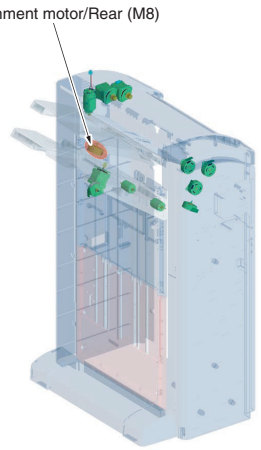

PARTS LAYOUT DRAWING/2

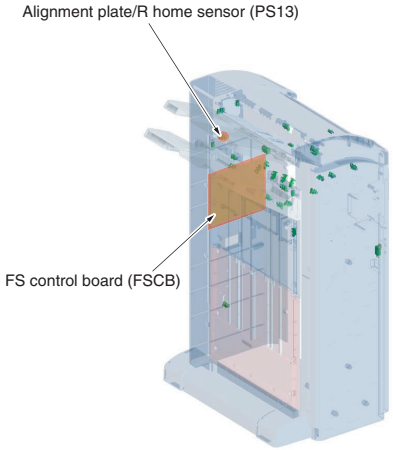

BOARD CONNECTOR LAYOUT DRAWING (FSCB)

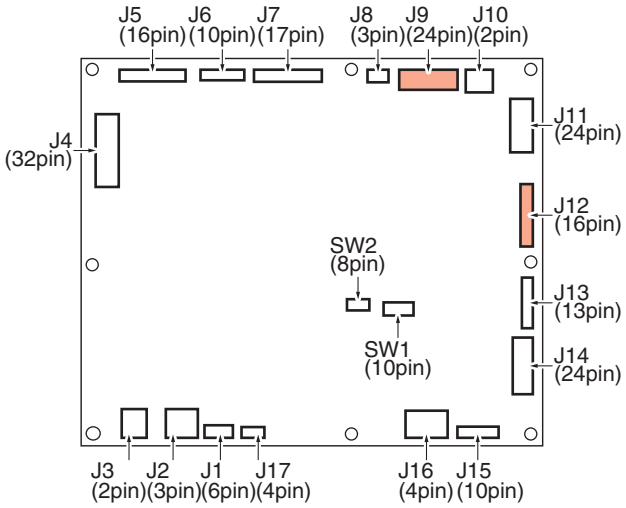

WIRING DIAGRAM

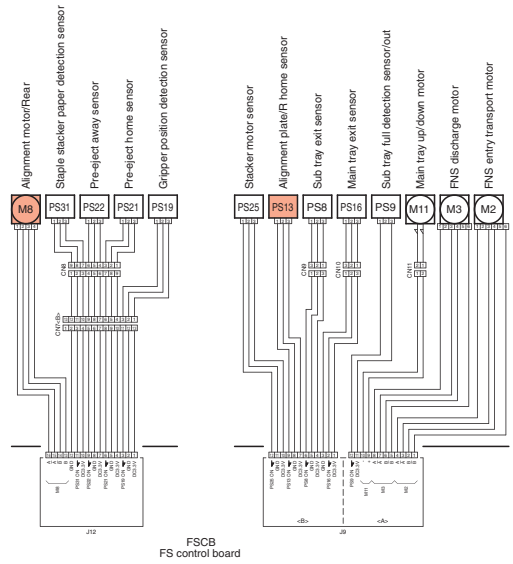

26. C1141

PARTS LAYOUT DRAWING/1

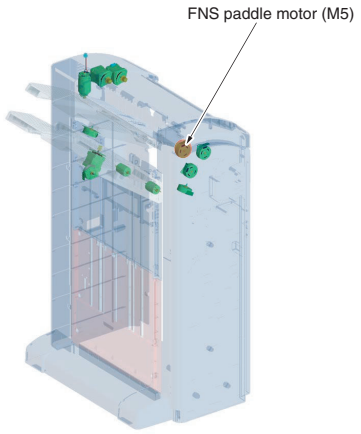

PARTS LAYOUT DRAWING/2

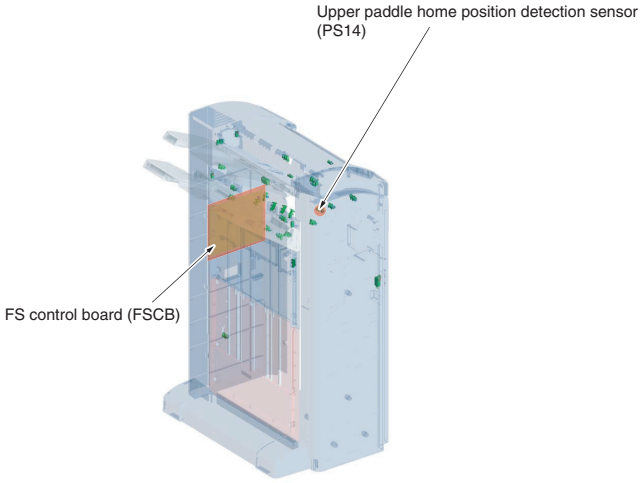

BOARD CONNECTOR LAYOUT DRAWING (FSCB)

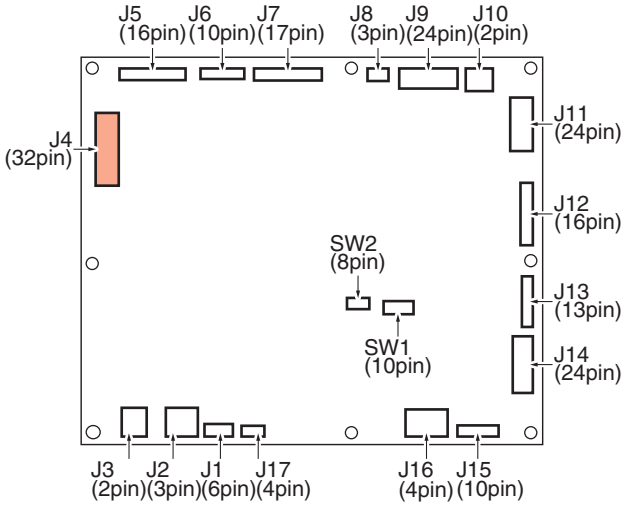

WIRING DIAGRAM

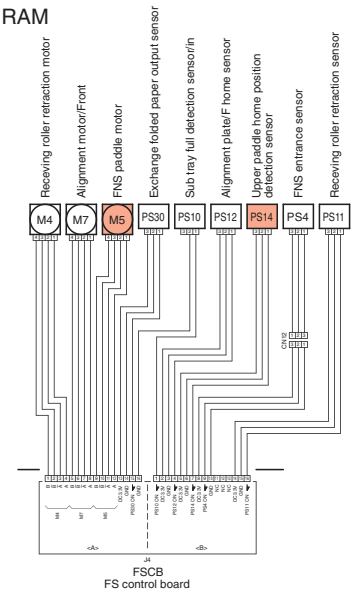

27. C1144

PARTS LAYOUT DRAWING/1

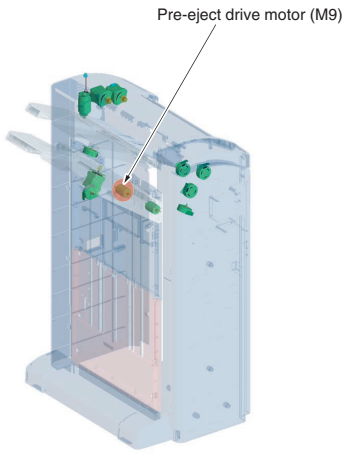

PARTS LAYOUT DRAWING/2

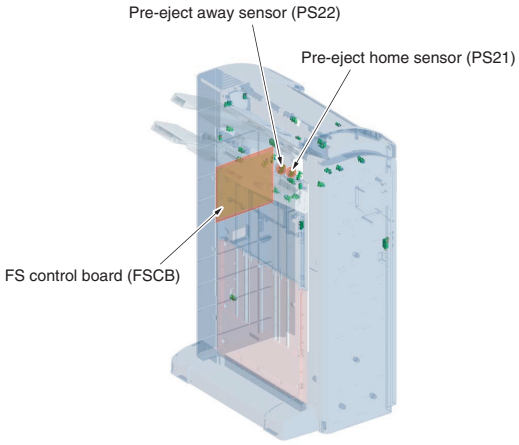

BOARD CONNECTOR LAYOUT DRAWING (FSCB)

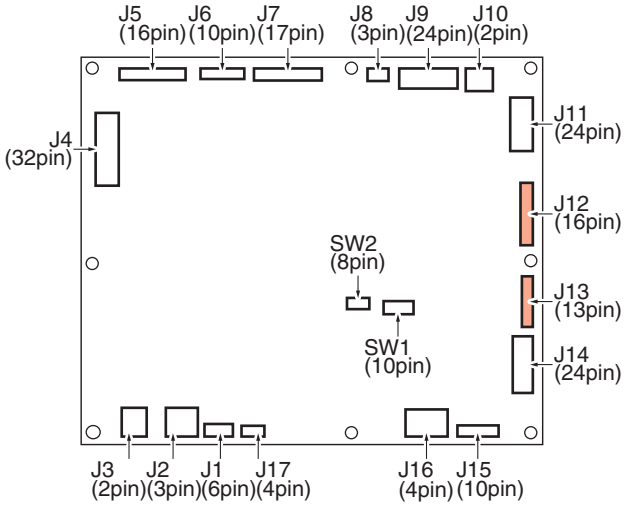

WIRING DIAGRAM

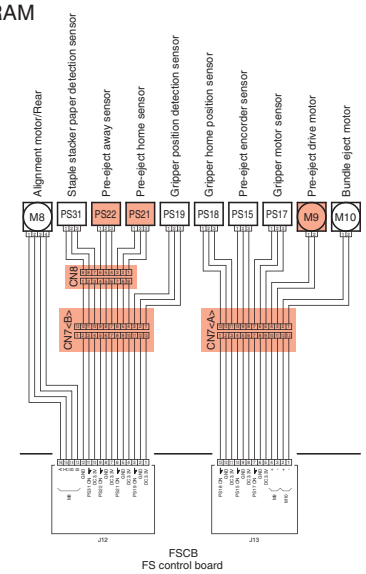

28. C1145

PARTS LAYOUT DRAWING/1

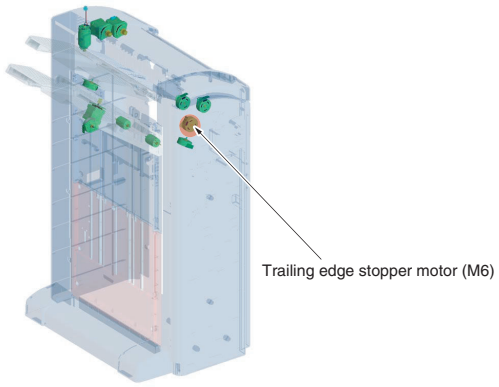

PARTS LAYOUT DRAWING/2

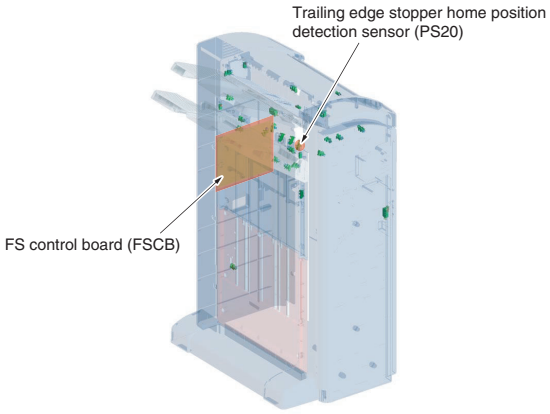

BOARD CONNECTOR LAYOUT DRAWING (FSCB)

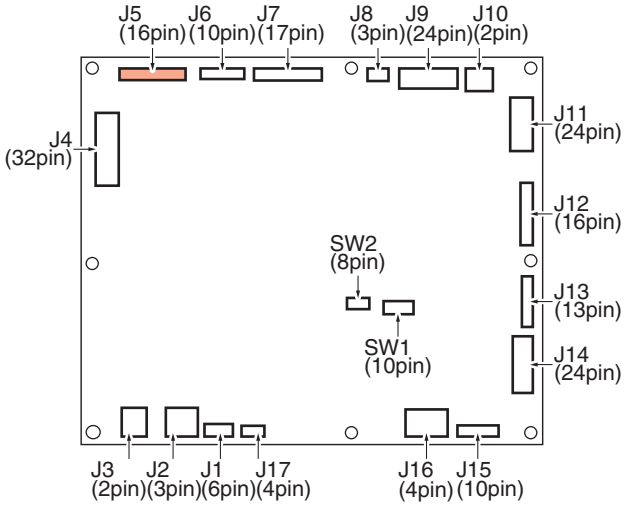

WIRING DIAGRAM

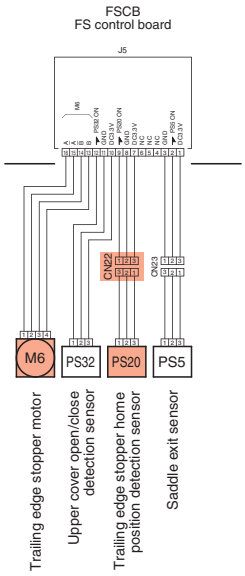

29. C1156

PARTS LAYOUT DRAWING/1

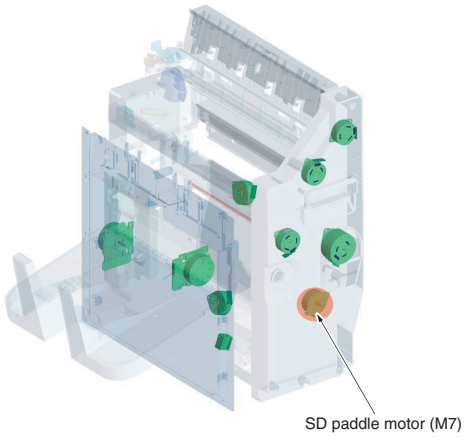

PARTS LAYOUT DRAWING/2

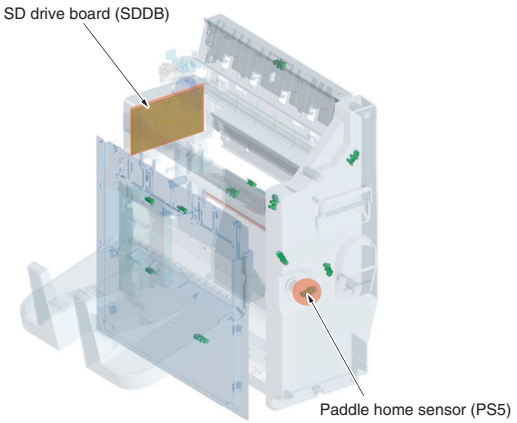

PARTS LAYOUT DRAWING/3

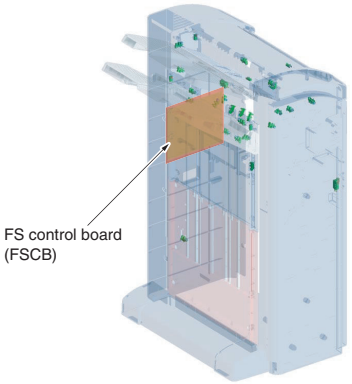

BOARD CONNECTOR LAYOUT DRAWING (SDDB)

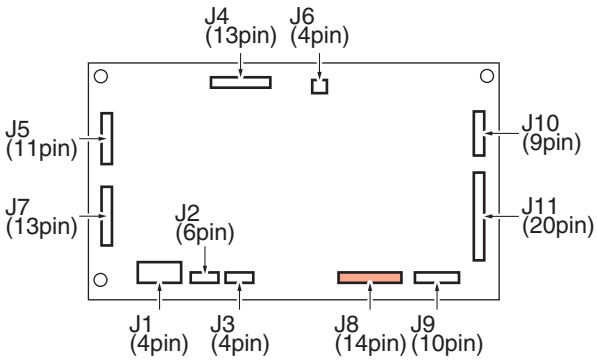

WIRING DIAGRAM

SDDB
SD drive board

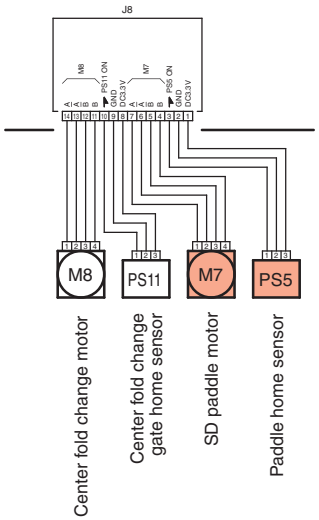

30. C1182

PARTS LAYOUT DRAWING

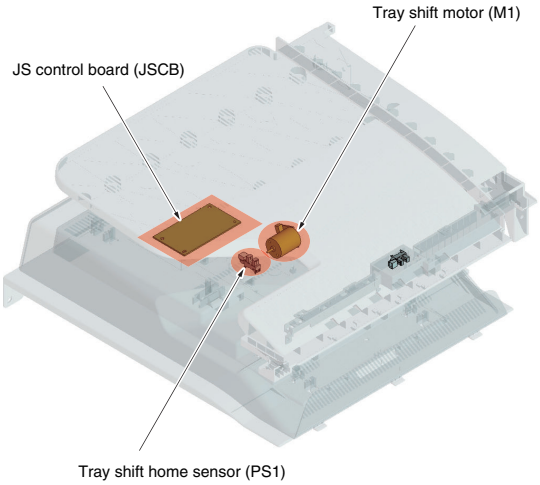

BOARD CONNECTOR LAYOUT DRAWING (JSCB)

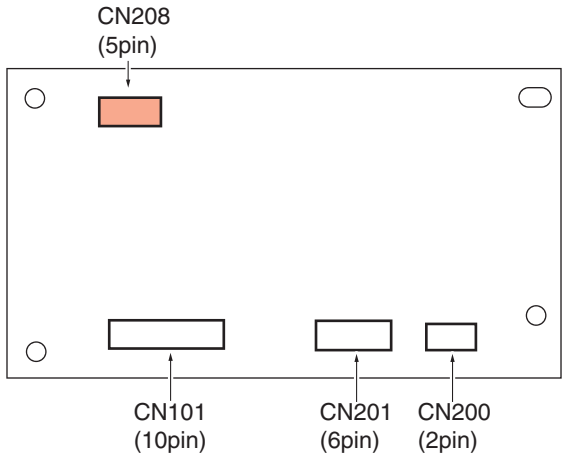

WIRING DIAGRAM

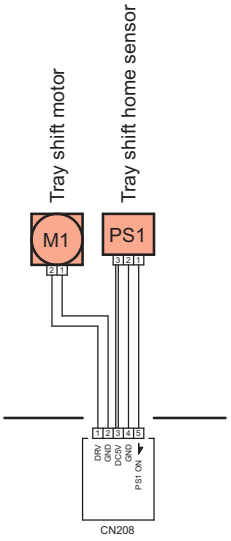

31. C1184

PARTS LAYOUT DRAWING/1

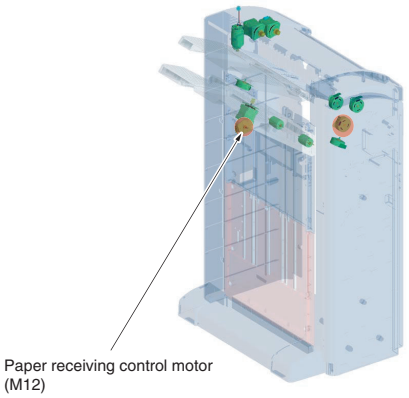

PARTS LAYOUT DRAWING/2

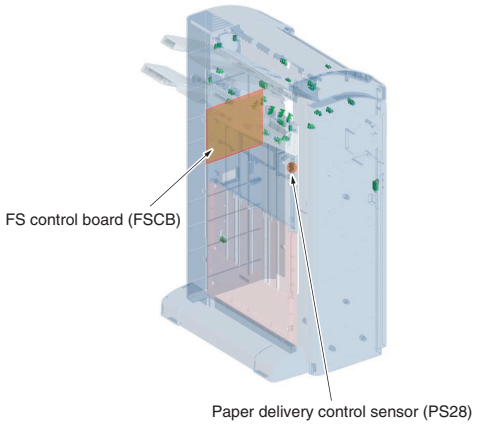

BOARD CONNECTOR LAYOUT DRAWING (FSCB)

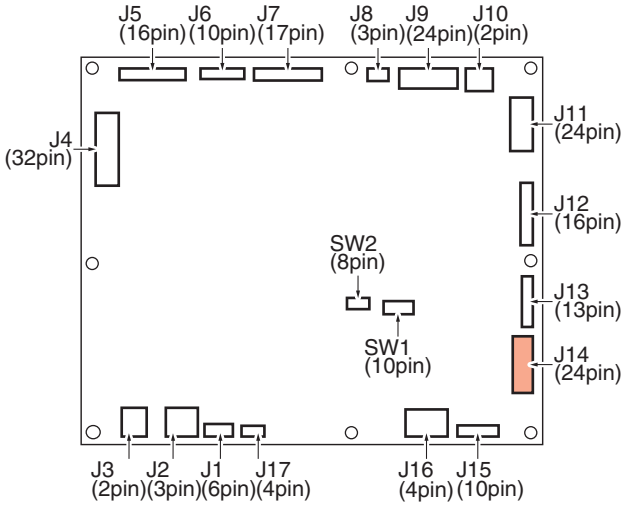

WIRING DIAGRAM

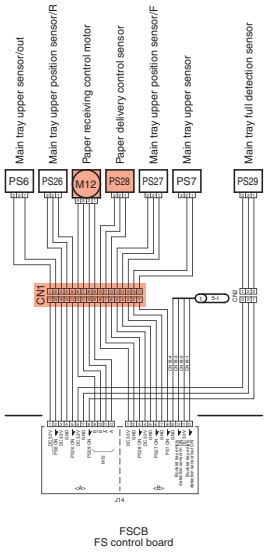

32. C1195

PARTS LAYOUT DRAWING/1

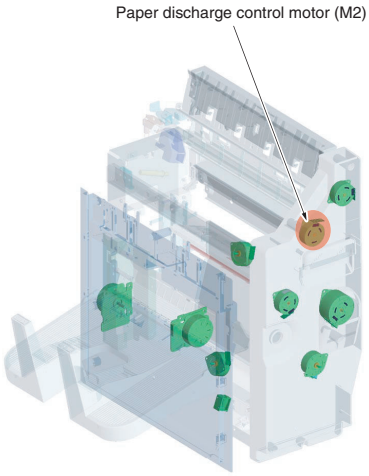

PARTS LAYOUT DRAWING/2

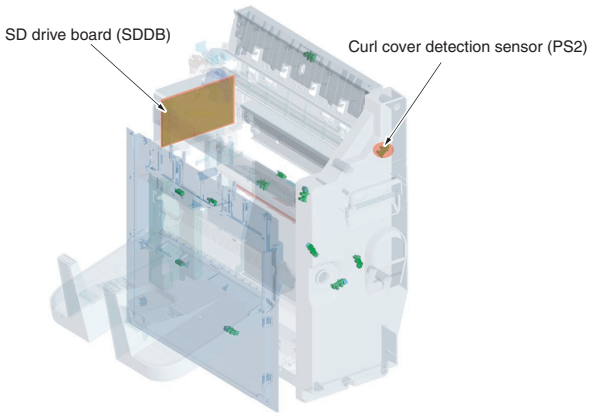

PARTS LAYOUT DRAWING/3

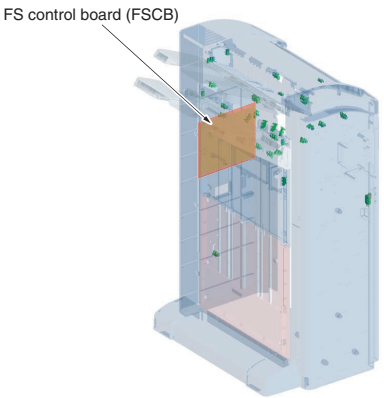

BOARD CONNECTOR LAYOUT DRAWING (SDDB)

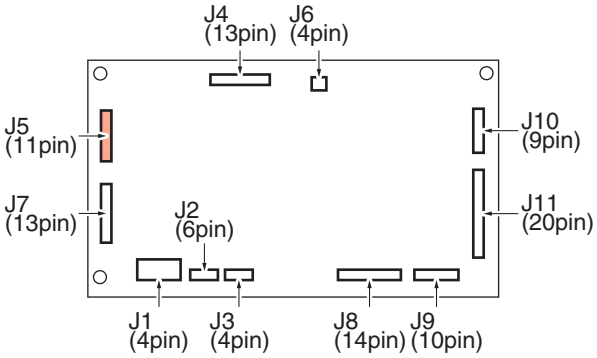

WIRING DIAGRAM

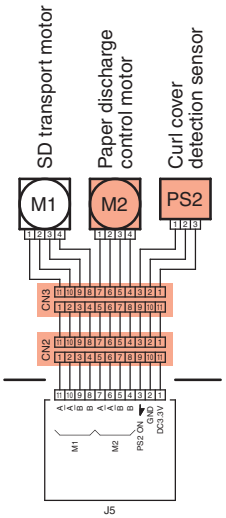

SDDB
SD drive board

33. C1196

33.1 FS-534

PARTS LAYOUT DRAWING/1

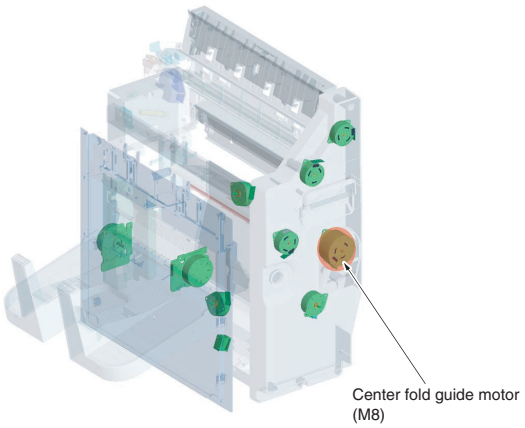

PARTS LAYOUT DRAWING/2

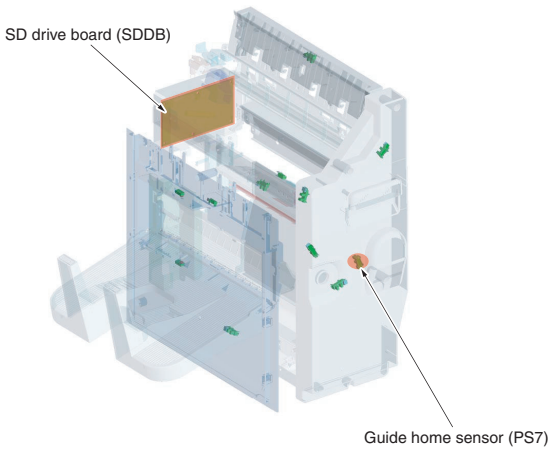

PARTS LAYOUT DRAWING/3

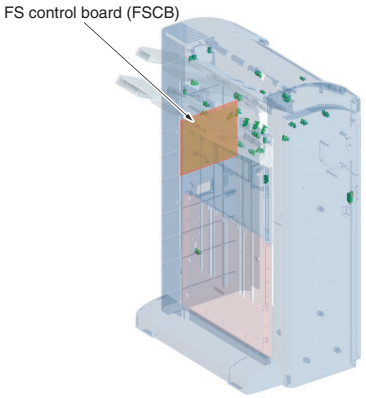

BOARD CONNECTOR LAYOUT DRAWING (SDDB)

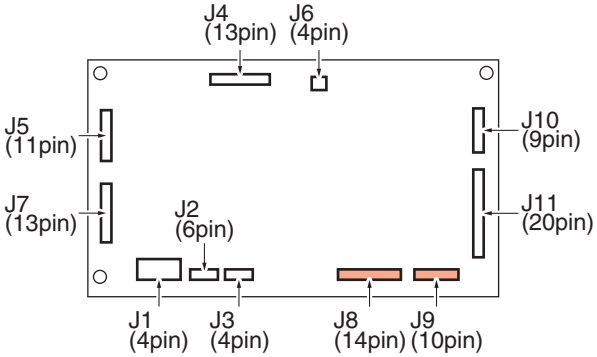

WIRING DIAGRAM

SDDB
SD drive board

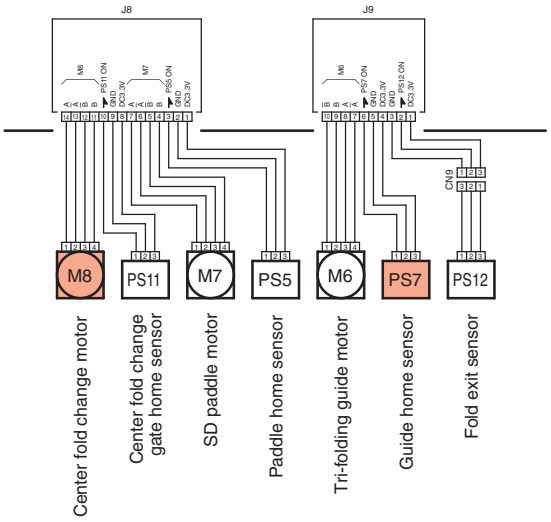

34. C1197

34.1 FS-534

PARTS LAYOUT DRAWING/1

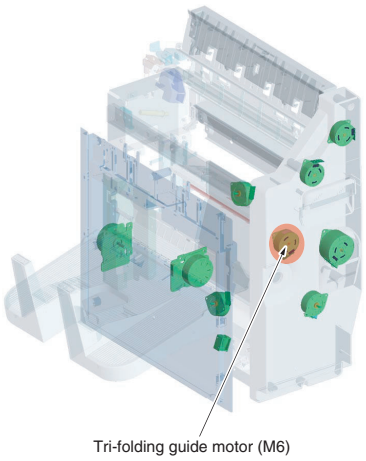

PARTS LAYOUT DRAWING/2

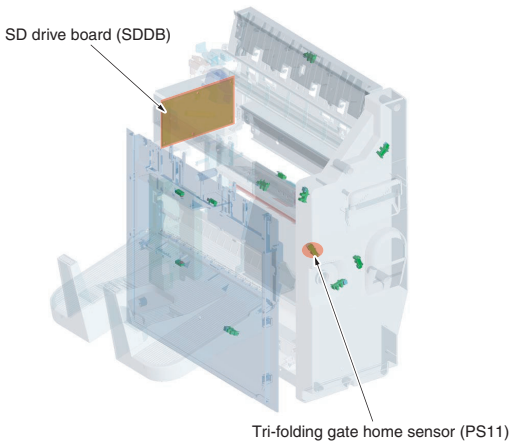

PARTS LAYOUT DRAWING/3

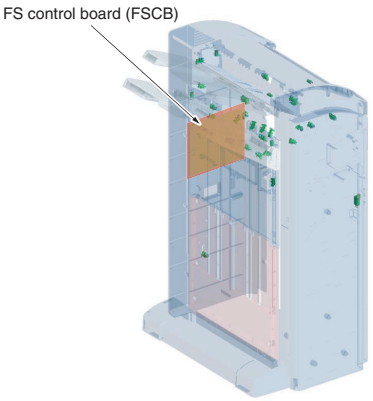

BOARD CONNECTOR LAYOUT DRAWING (SDDB)

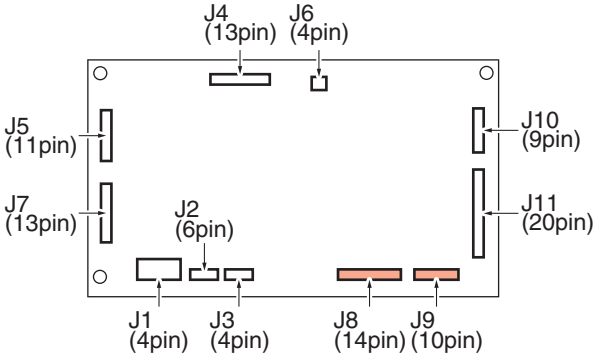

WIRING DIAGRAM

SDDB
SD drive board

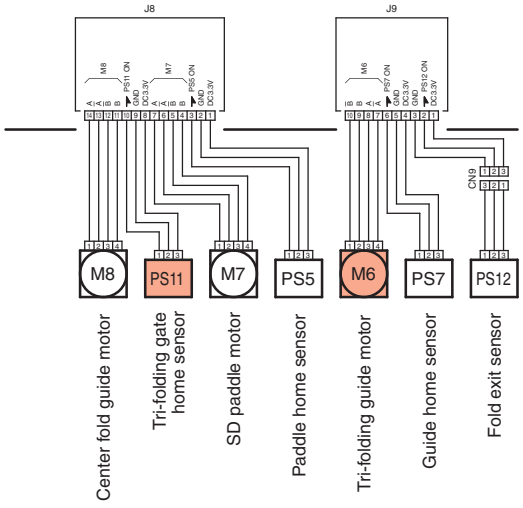

35. C11A1

PARTS LAYOUT DRAWING/1

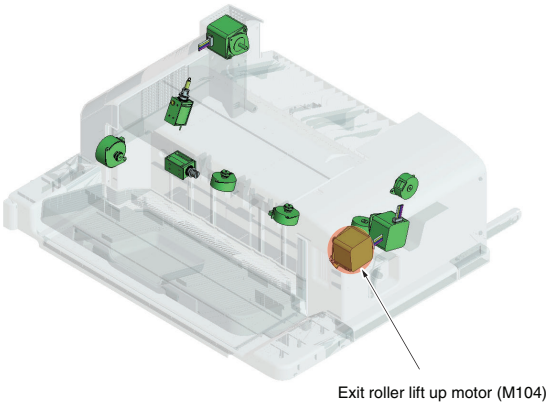

PARTS LAYOUT DRAWING/2

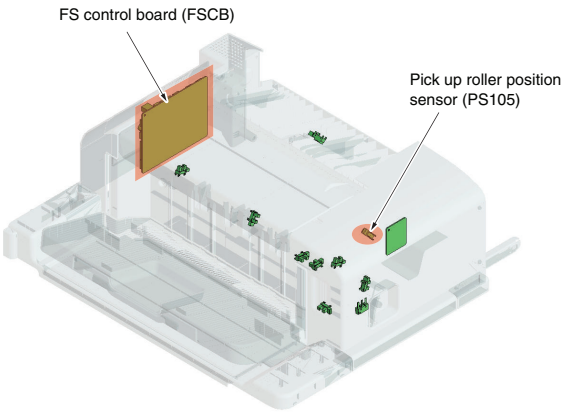

BOARD CONNECTOR LAYOUT DRAWING (FSCB)

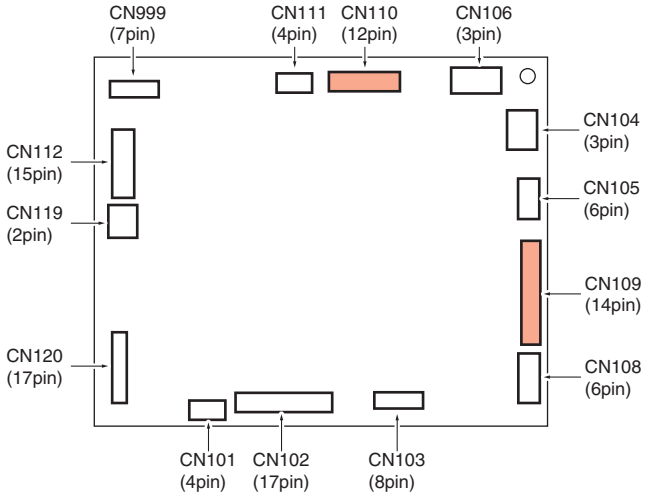

WIRING DIAGRAM

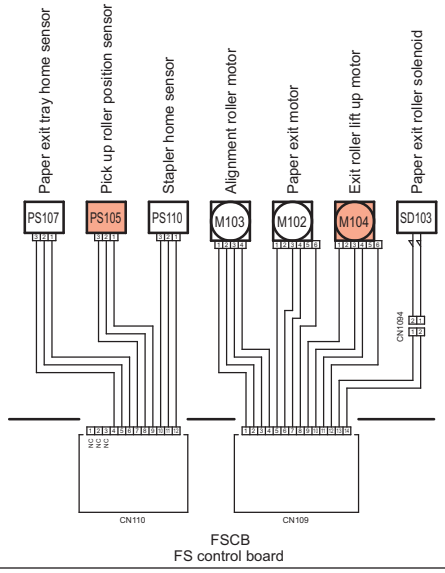

36. C11A2

PARTS LAYOUT DRAWING/1

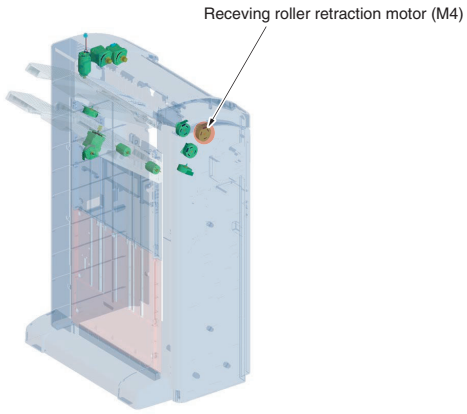

PARTS LAYOUT DRAWING/2

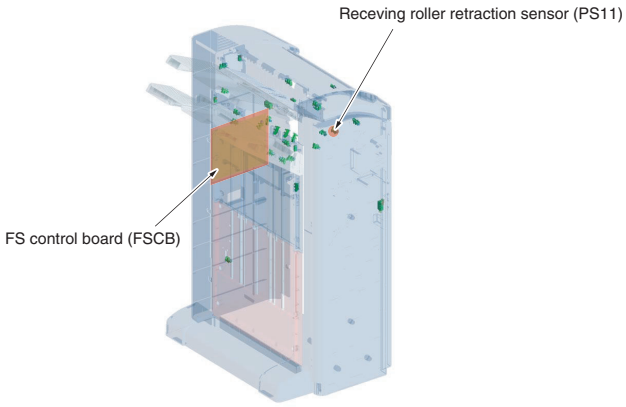

BOARD CONNECTOR LAYOUT DRAWING (FSCB)

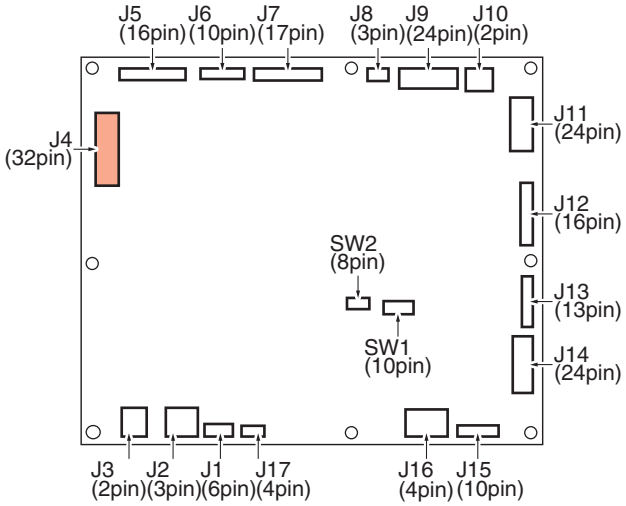

WIRING DIAGRAM

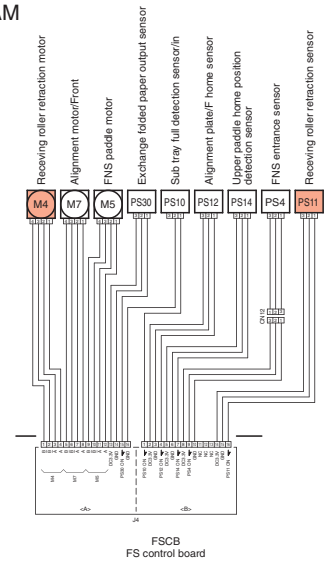

37. C11E1

PARTS LAYOUT DRAWING/1

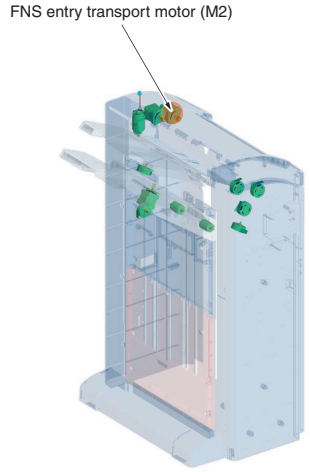

PARTS LAYOUT DRAWING/2

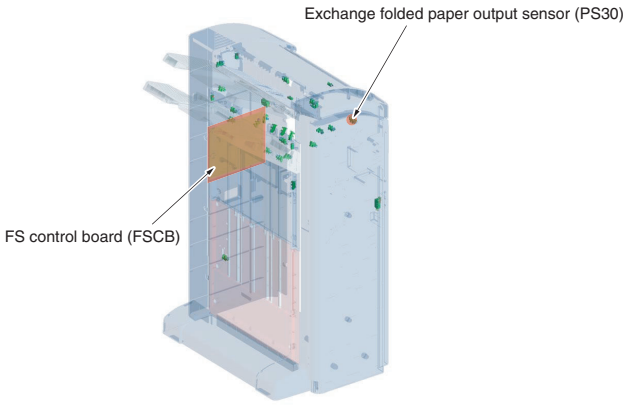

BOARD CONNECTOR LAYOUT DRAWING (FSCB)

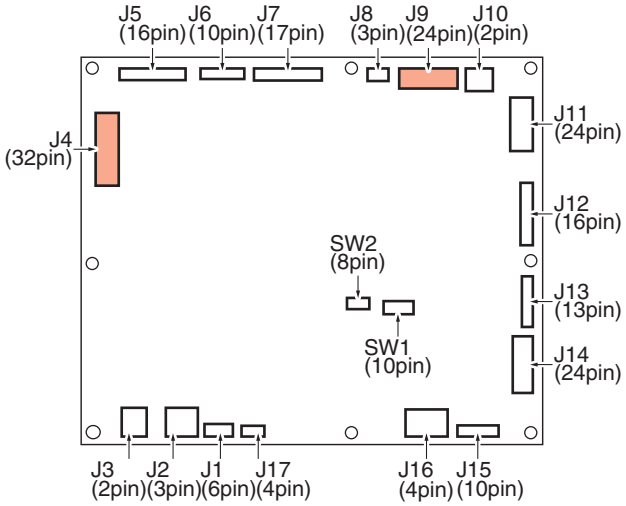

WIRING DIAGRAM

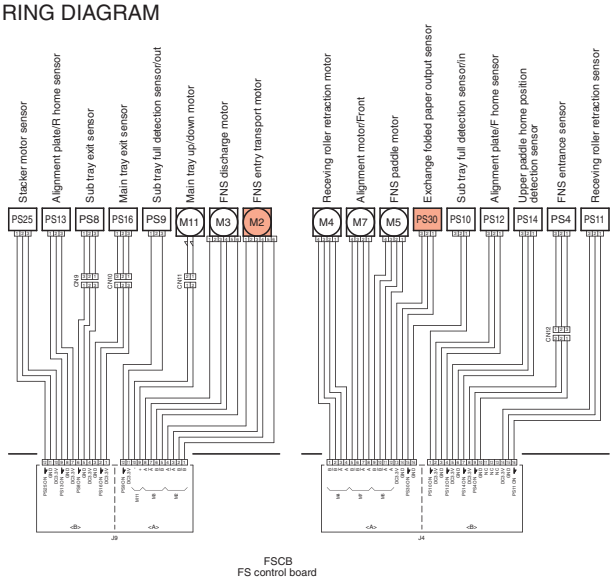

38. C1402

PARTS LAYOUT DRAWING

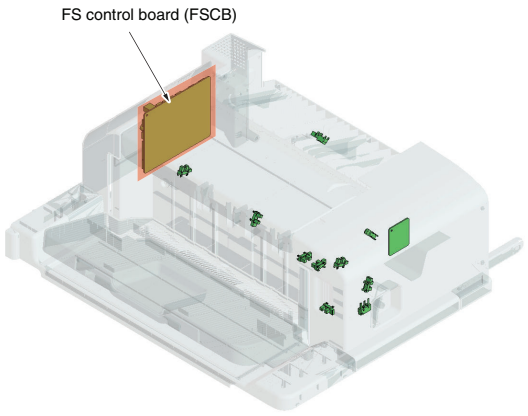

39. C2355

PARTS LAYOUT DRAWING/1

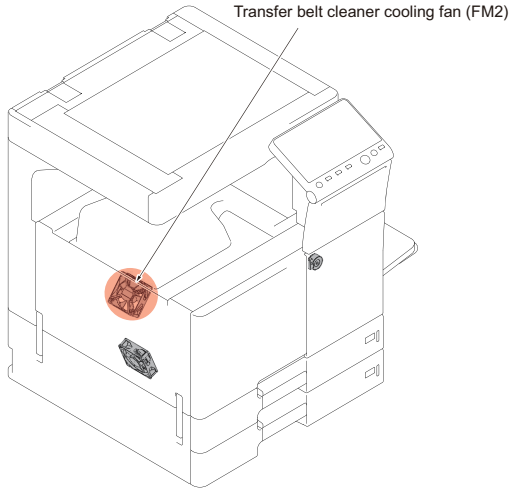

PARTS LAYOUT DRAWING/2

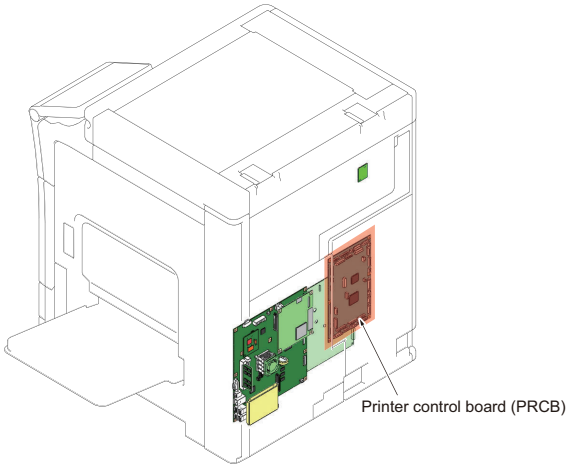

BOARD CONNECTOR LAYOUT DRAWING (PRCB)

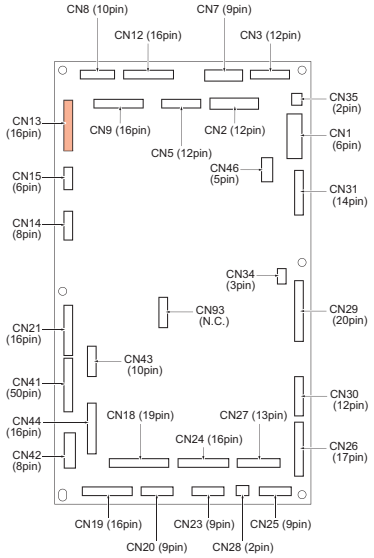

WIRING DIAGRAM

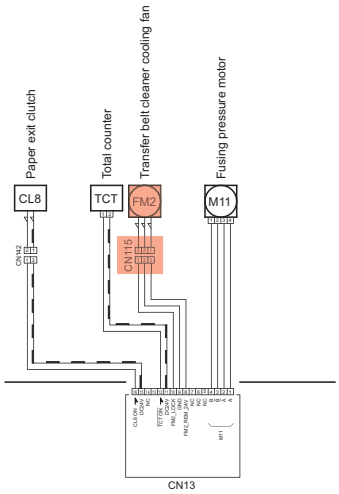

PRCB
Printer control board

RELAY CONNECTOR LAYOUT DRAWING

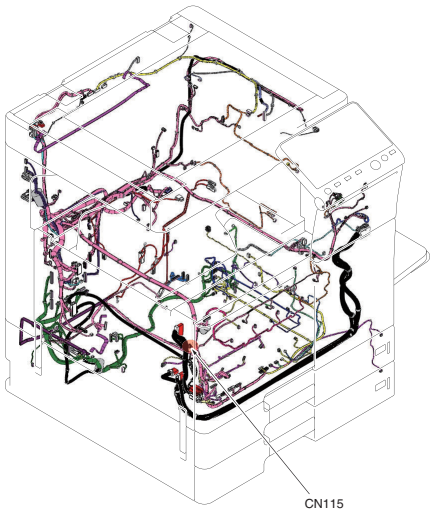

40. C2414, C2558, C2564

PARTS LAYOUT DRAWING/1

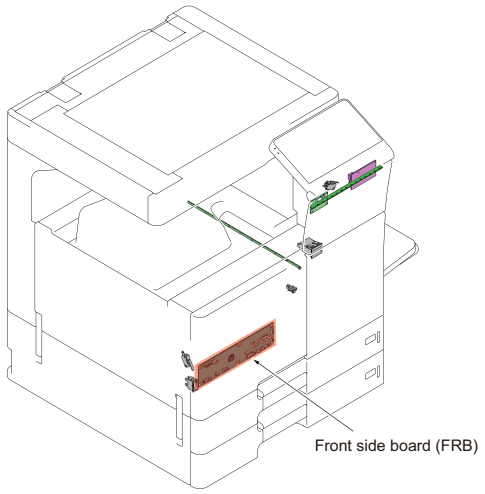

PARTS LAYOUT DRAWING/2

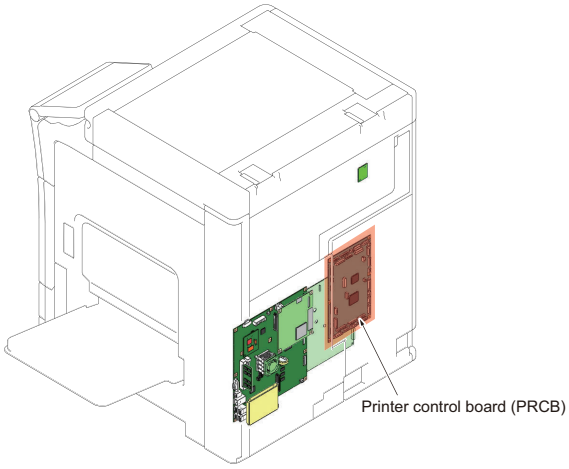

BOARD CONNECTOR LAYOUT DRAWING (FRB)

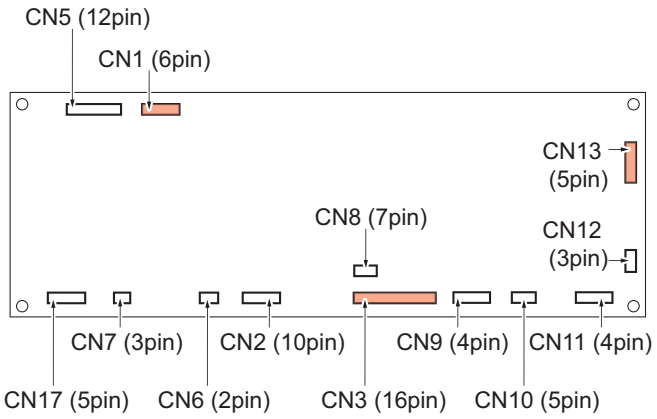

BOARD CONNECTOR LAYOUT DRAWING (PRCB)

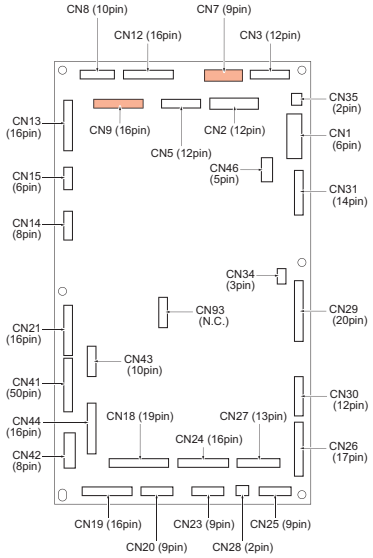

WIRING DIAGRAM

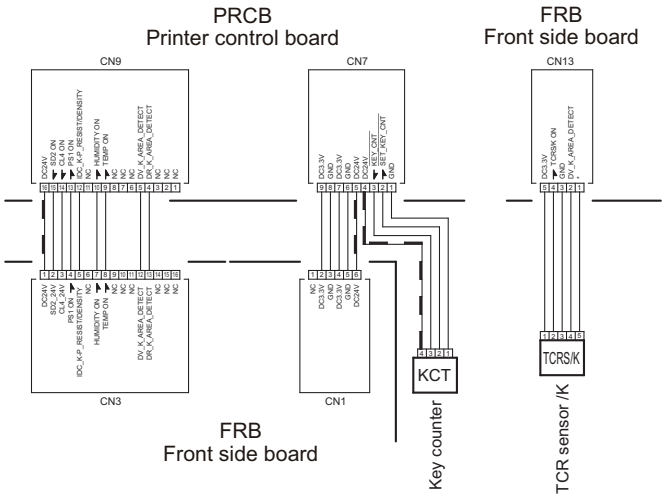

41. C2557

PARTS LAYOUT DRAWING/1

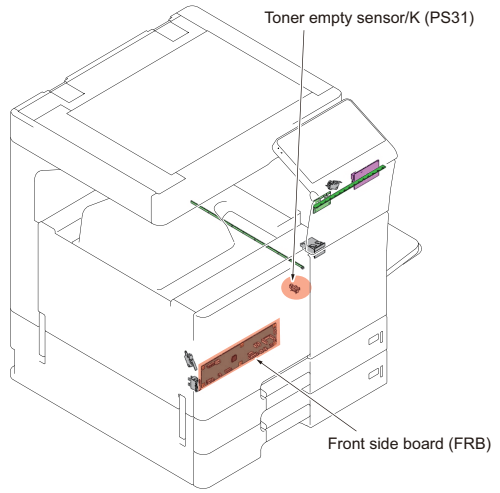

PARTS LAYOUT DRAWING/2

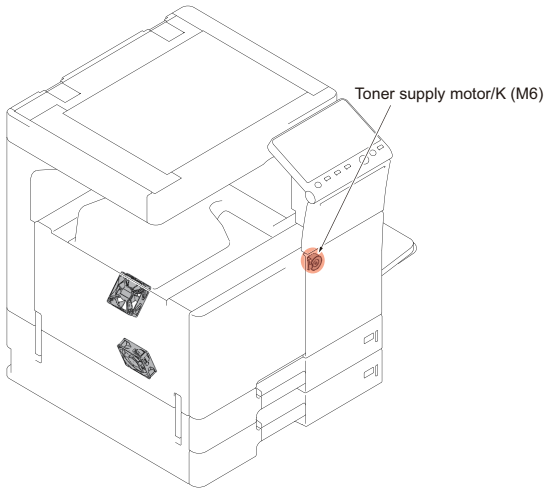

PARTS LAYOUT DRAWING/3

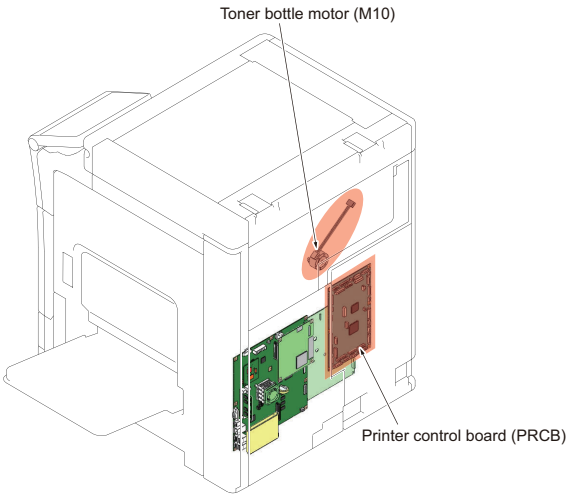

BOARD CONNECTOR LAYOUT DRAWING (FRB)

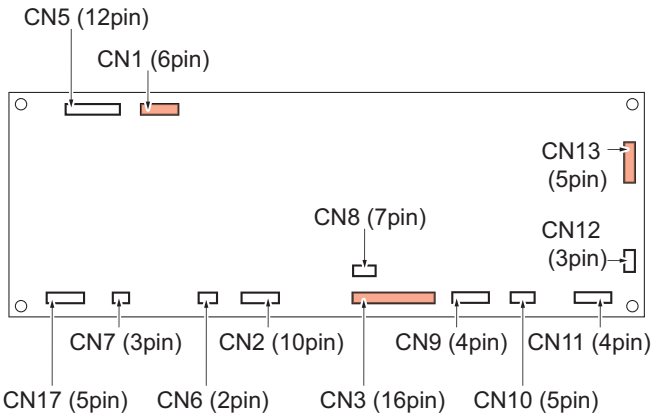

BOARD CONNECTOR LAYOUT DRAWING (PRCB)

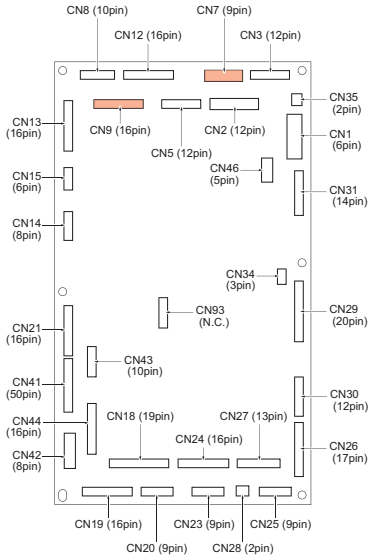

WIRING DIAGRAM

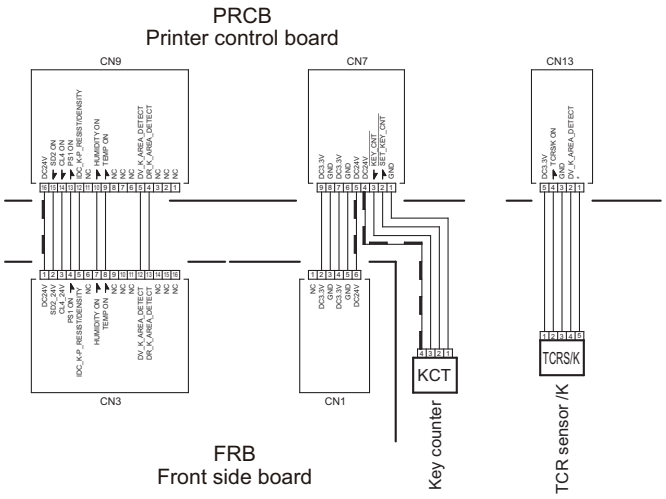

42. C255C

PARTS LAYOUT DRAWING/1

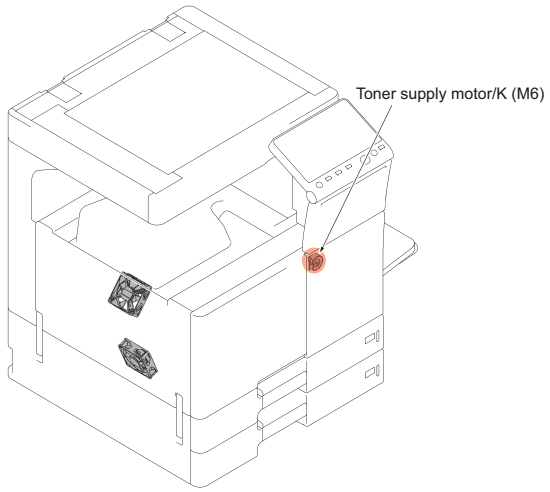

PARTS LAYOUT DRAWING/2

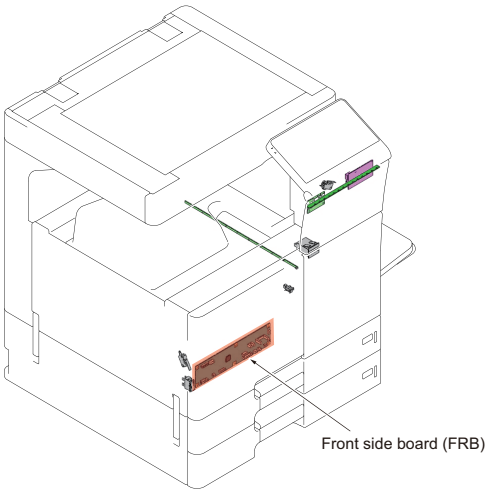

PARTS LAYOUT DRAWING/3

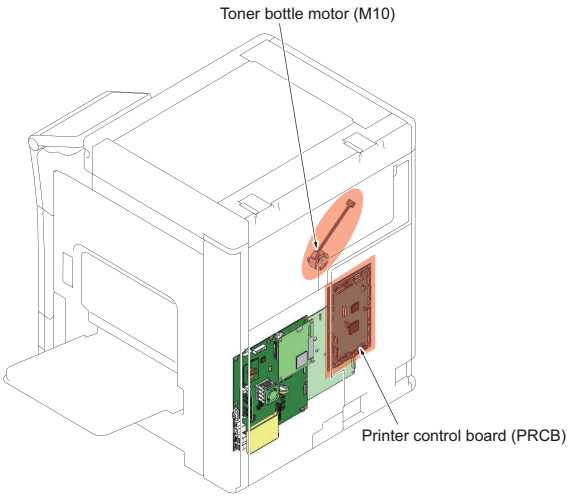

BOARD CONNECTOR LAYOUT DRAWING (FRB)

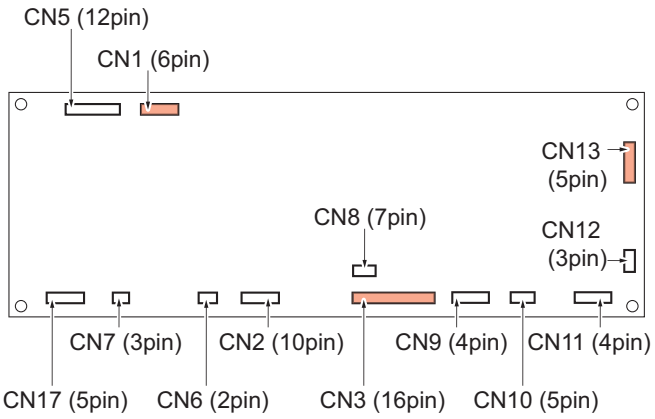

BOARD CONNECTOR LAYOUT DRAWING (PRCB)

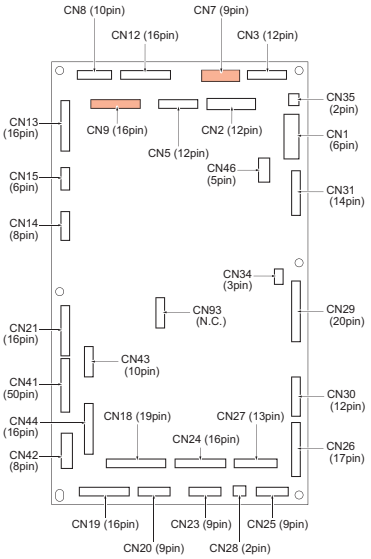

WIRING DIAGRAM

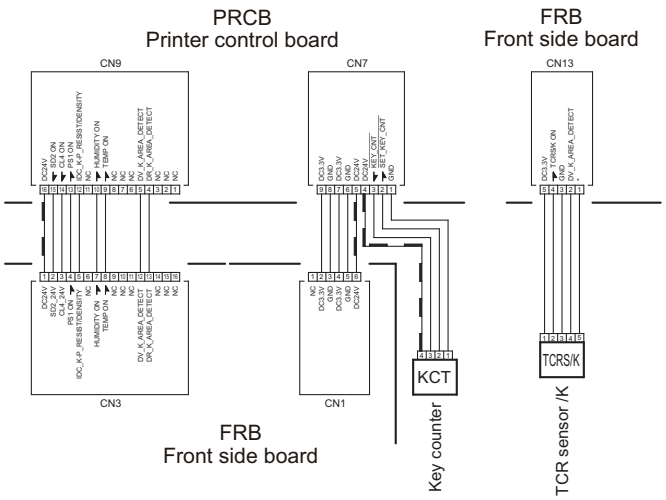

43. C2650

PARTS LAYOUT DRAWING

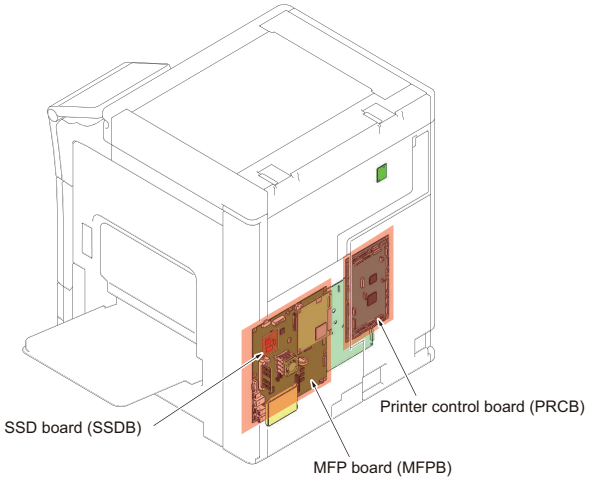

44. C2A14

PARTS LAYOUT DRAWING/1

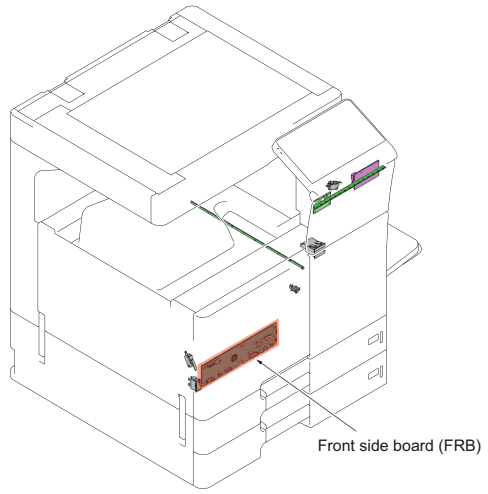

PARTS LAYOUT DRAWING/2

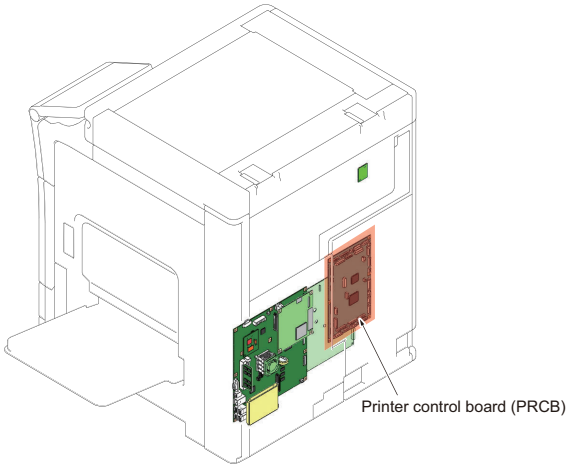

BOARD CONNECTOR LAYOUT DRAWING (FRB)

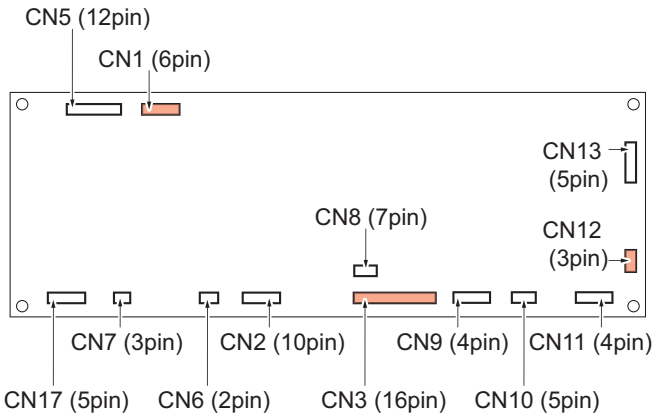

BOARD CONNECTOR LAYOUT DRAWING (PRCB)

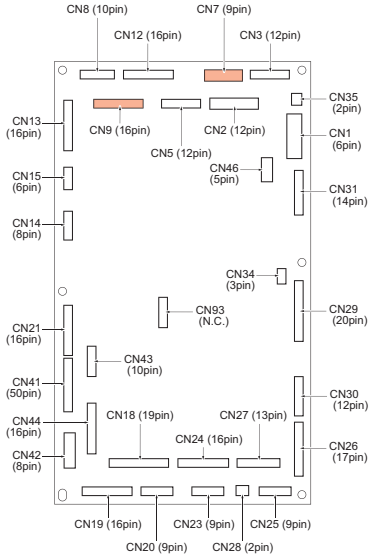

WIRING DIAGRAM

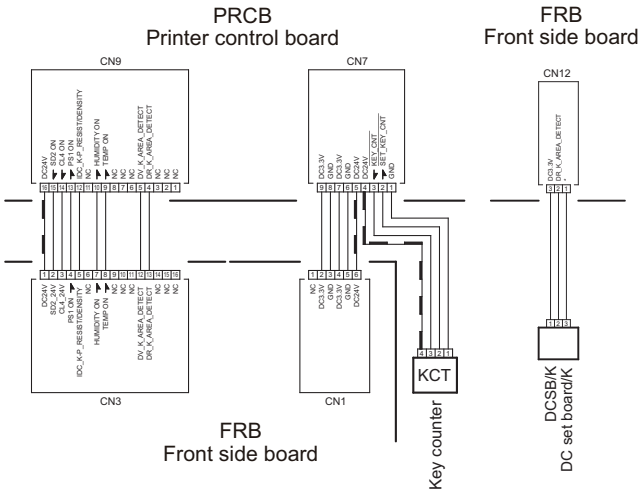

45. C3101

PARTS LAYOUT DRAWING/1

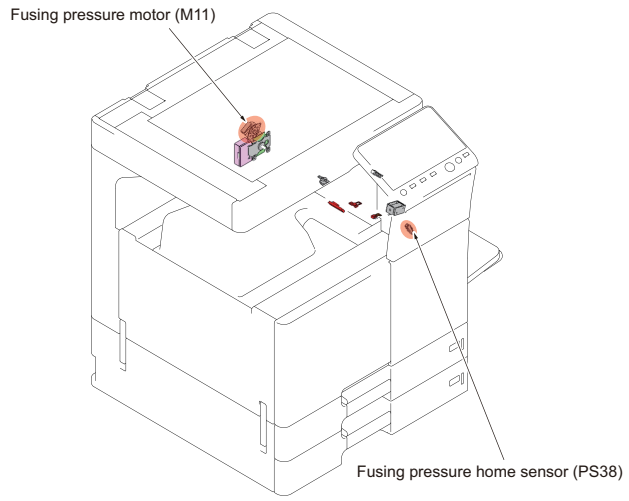

PARTS LAYOUT DRAWING/2

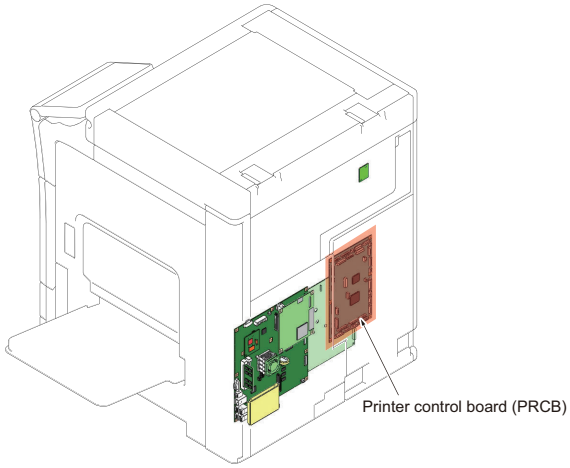

BOARD CONNECTOR LAYOUT DRAWING (PRCB)

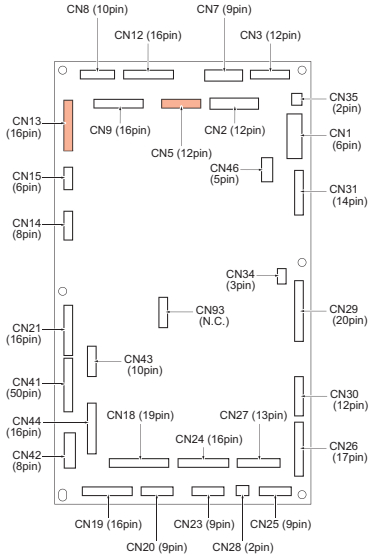

WIRING DIAGRAM

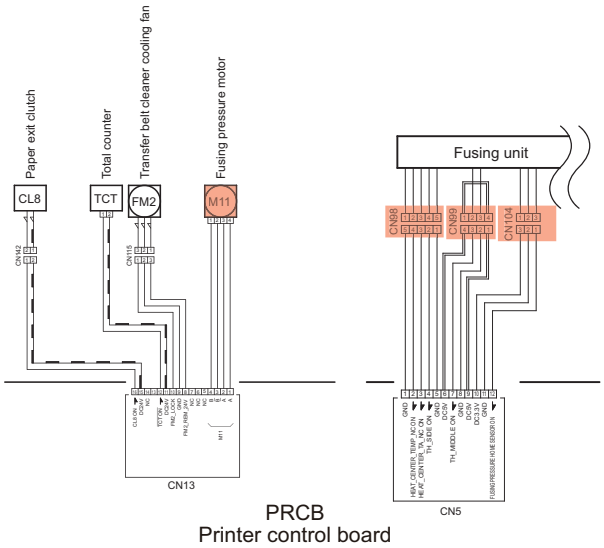

RELAY CONNECTOR LAYOUT DRAWING

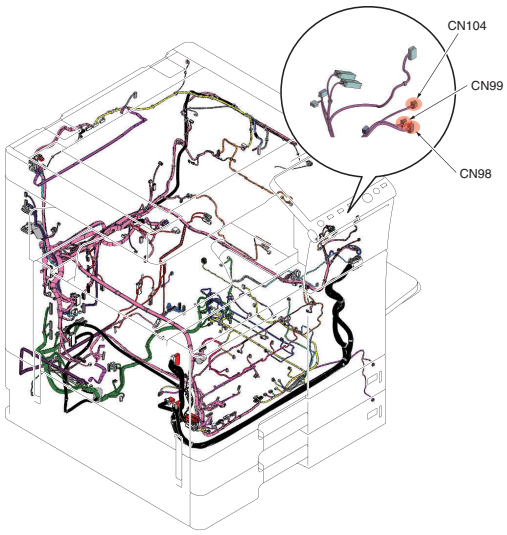

46. C3201, C3202

PARTS LAYOUT DRAWING/1

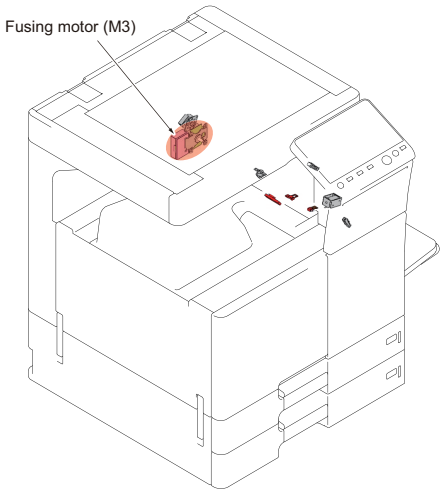

PARTS LAYOUT DRAWING/2

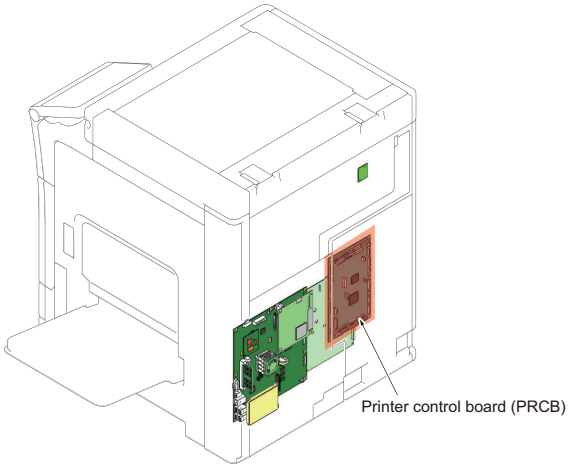

BOARD CONNECTOR LAYOUT DRAWING (PRCB)

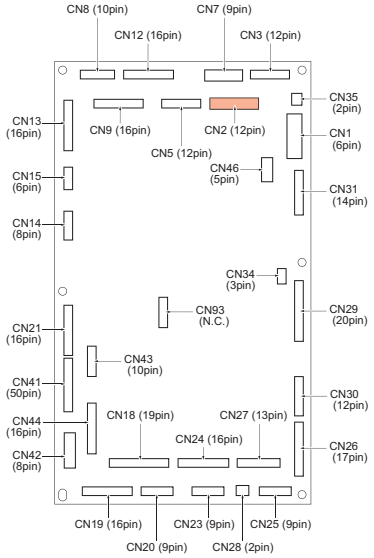

WIRING DIAGRAM

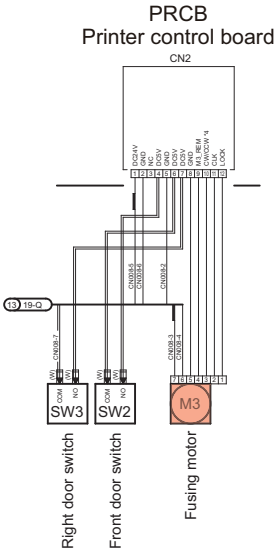

47. C3302

PARTS LAYOUT DRAWING/1

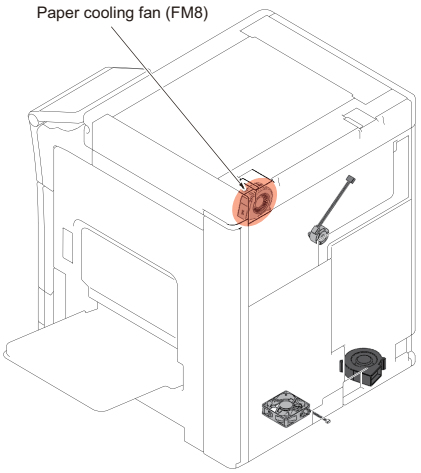

PARTS LAYOUT DRAWING/2

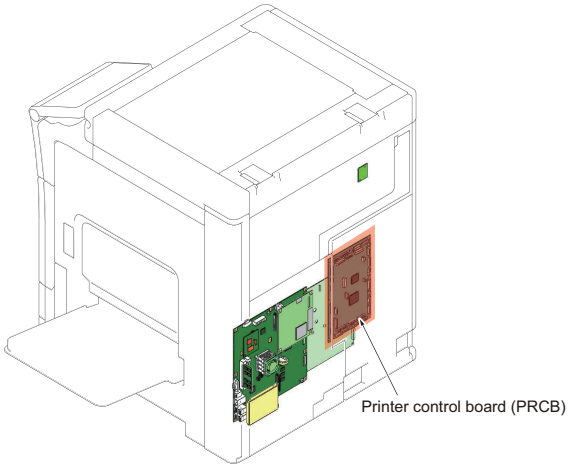

BOARD CONNECTOR LAYOUT DRAWING (PRCB)

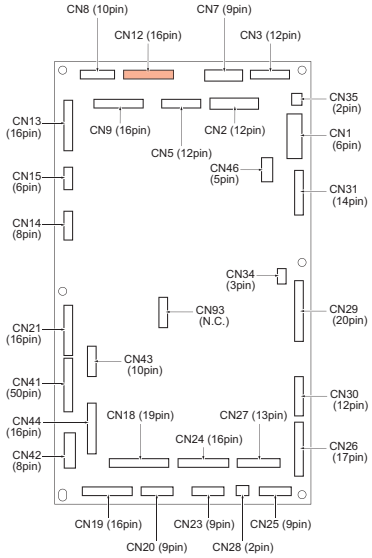

WIRING DIAGRAM

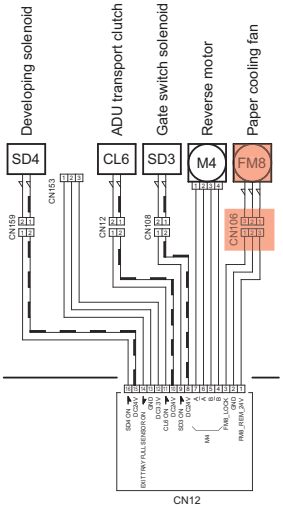

PRCB
Printer control board

RELAY CONNECTOR LAYOUT DRAWING

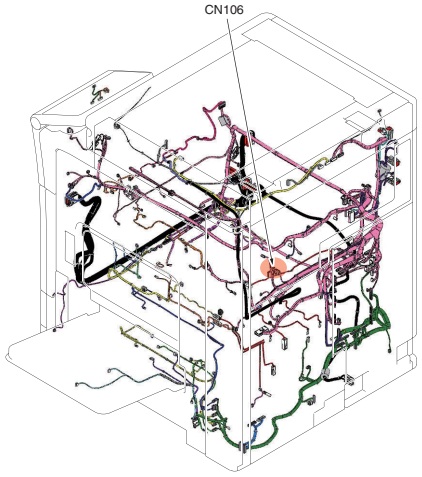

48. C3425

PARTS LAYOUT DRAWING/1

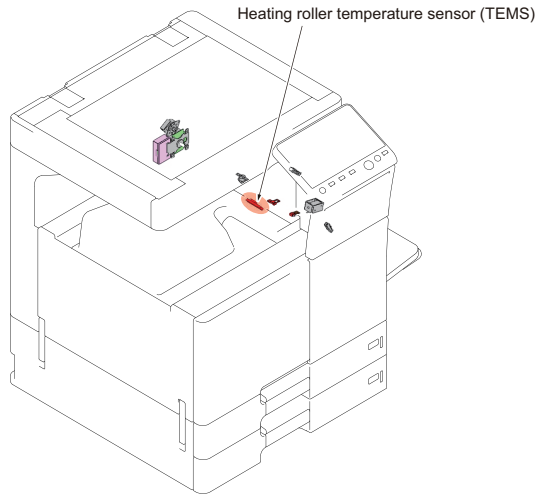

PARTS LAYOUT DRAWING/2

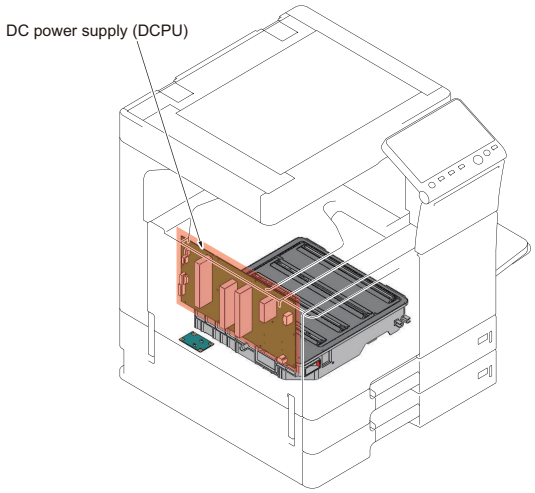

PARTS LAYOUT DRAWING/3

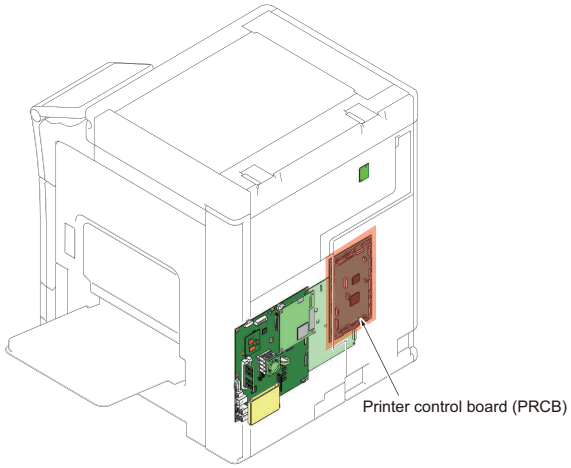

49. C3722, C3922

PARTS LAYOUT DRAWING/1

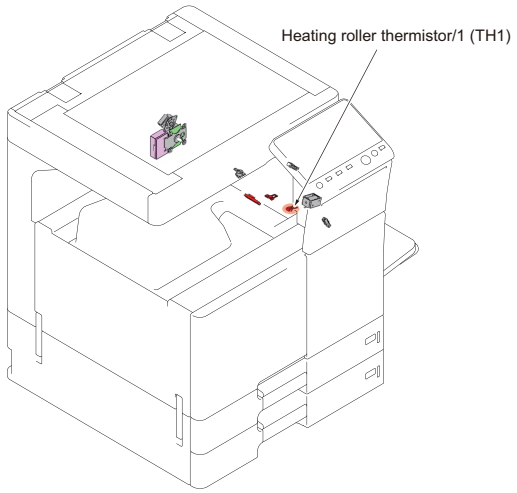

PARTS LAYOUT DRAWING/2

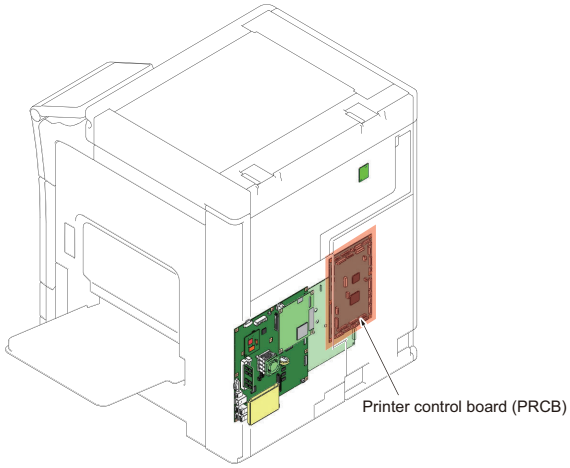

50. C3725, C3825, C3925

PARTS LAYOUT DRAWING/1

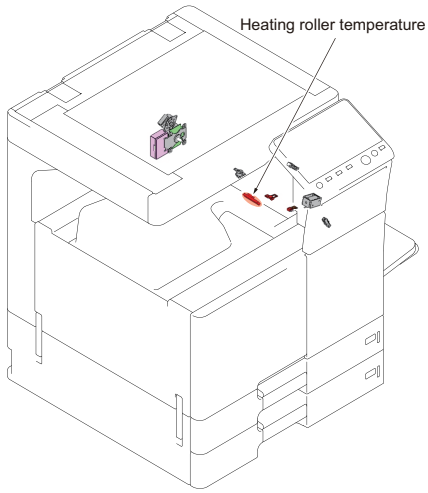

PARTS LAYOUT DRAWING/2

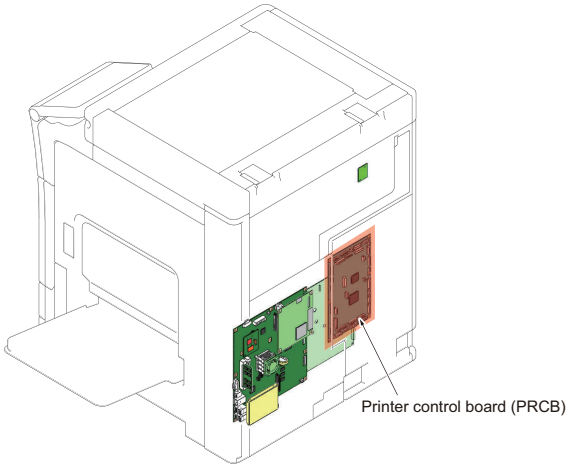

51. C3726, C3826

PARTS LAYOUT DRAWING/1

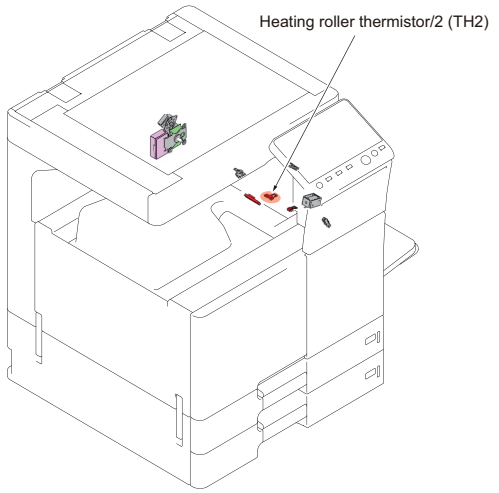

PARTS LAYOUT DRAWING/2

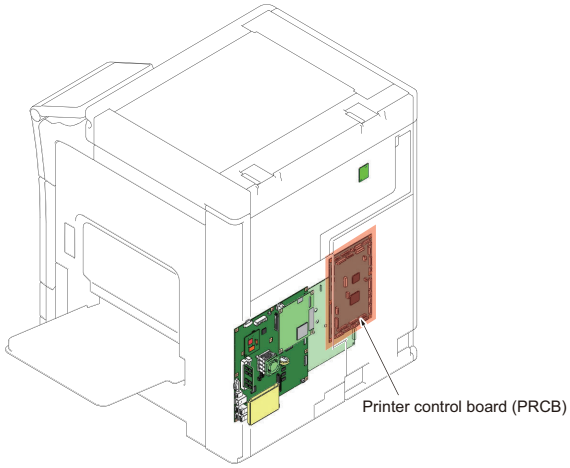

52. C3926

PARTS LAYOUT DRAWING/1

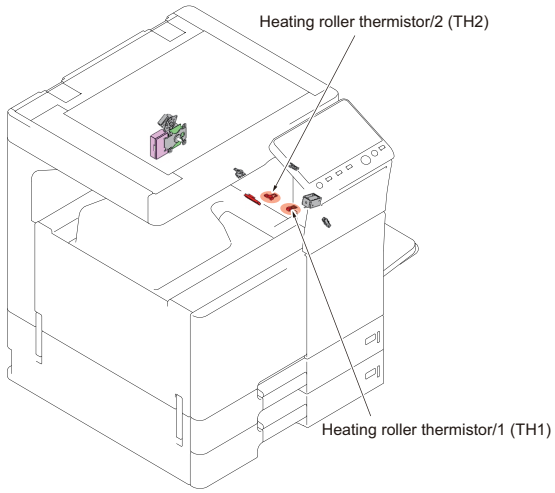

PARTS LAYOUT DRAWING/2

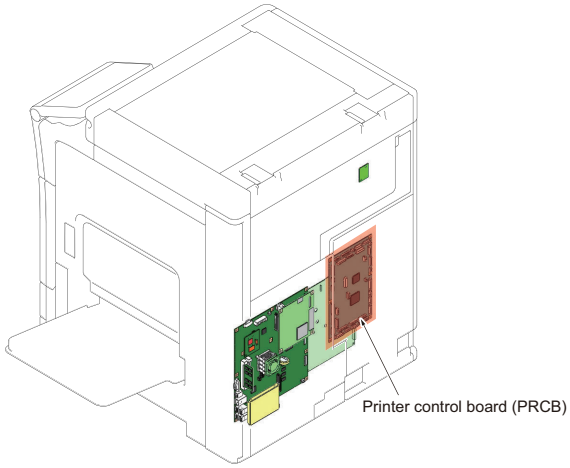

53. C4091

PARTS LAYOUT DRAWING

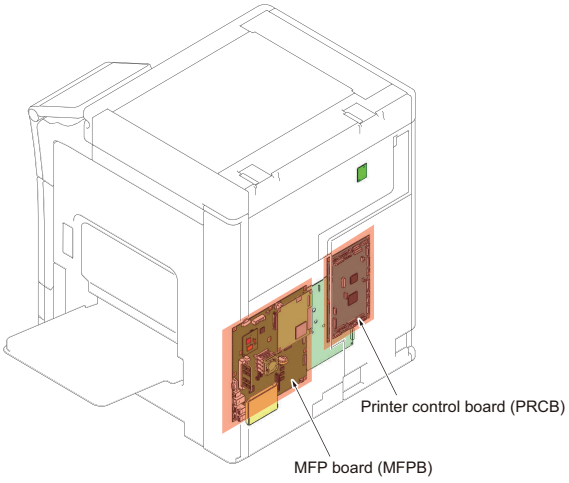

BOARD CONNECTOR LAYOUT DRAWING (PRCB)

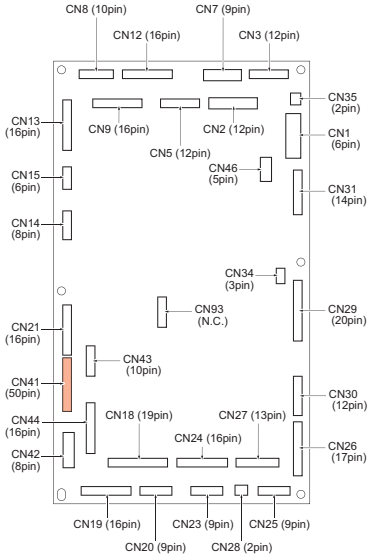

BOARD CONNECTOR LAYOUT DRAWING (MFPB)

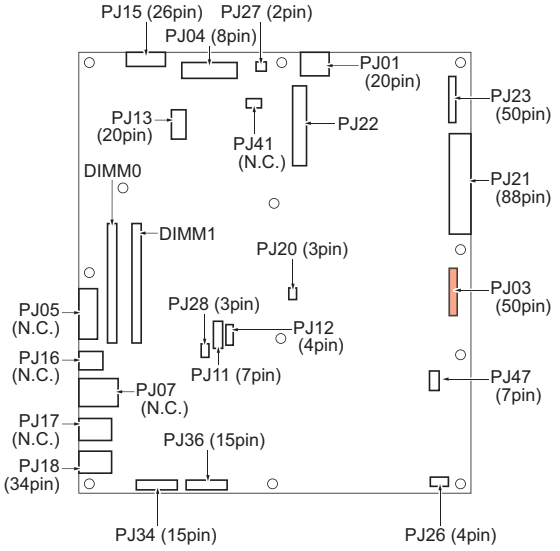

WIRING DIAGRAM

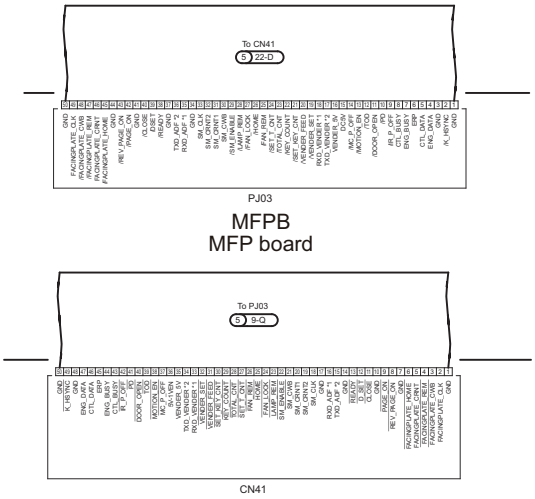

54. C4101

PARTS LAYOUT DRAWING/1

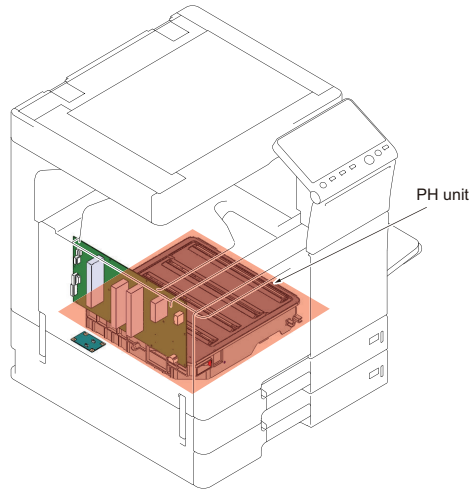

PARTS LAYOUT DRAWING/2

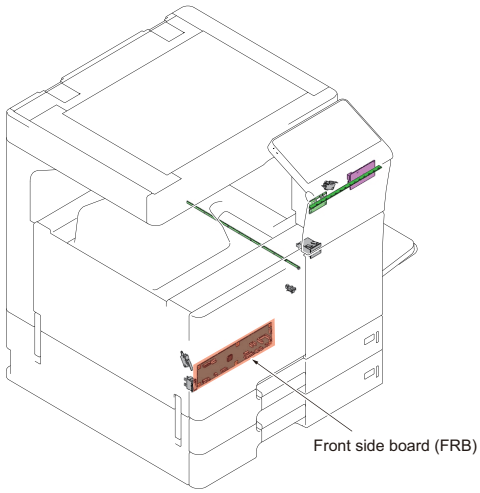

PARTS LAYOUT DRAWING/3

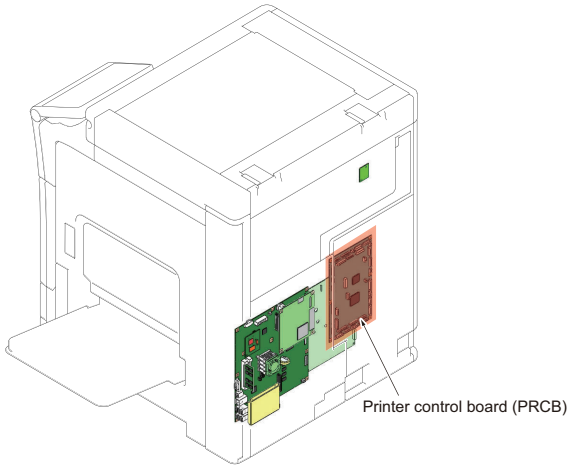

BOARD CONNECTOR LAYOUT DRAWING (FRB)

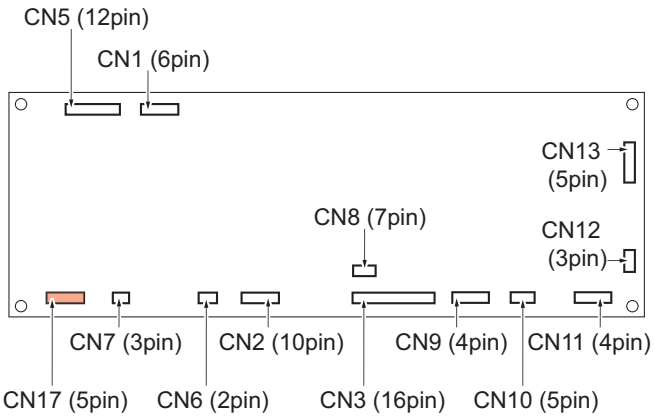

WIRING DIAGRAM

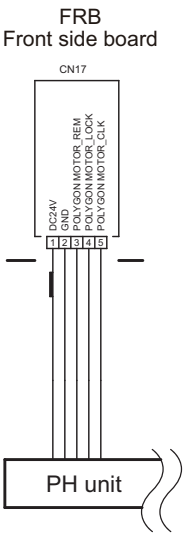

55. C4501

PARTS LAYOUT DRAWING/1

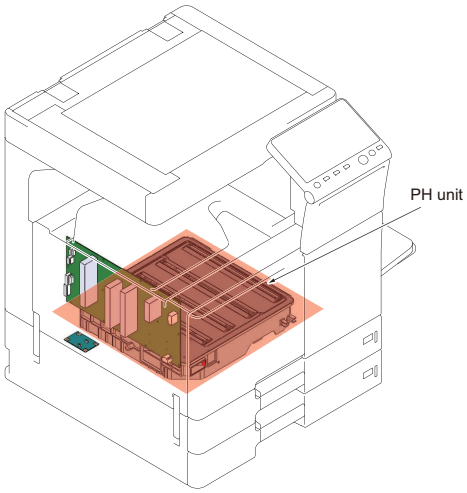

PARTS LAYOUT DRAWING/2

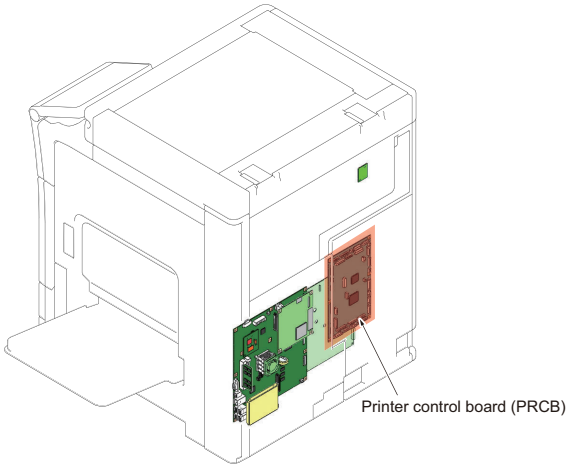

BOARD CONNECTOR LAYOUT DRAWING (PRCB)

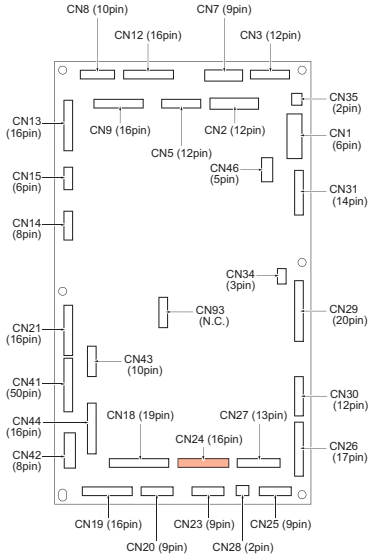

WIRING DIAGRAM

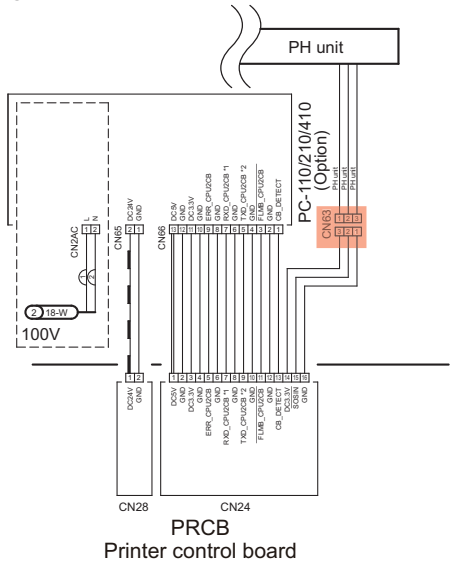

RELAY CONNECTOR LAYOUT DRAWING

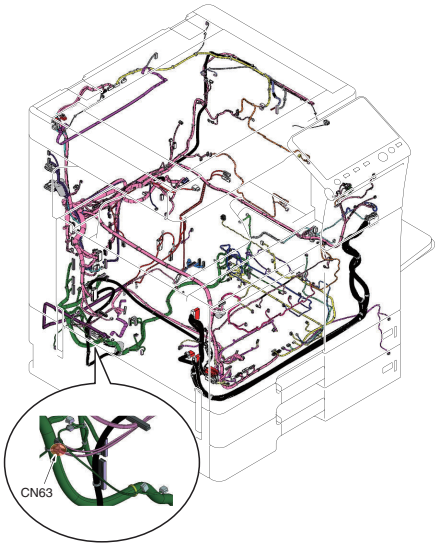

56. C4801, CC163

PARTS LAYOUT DRAWING

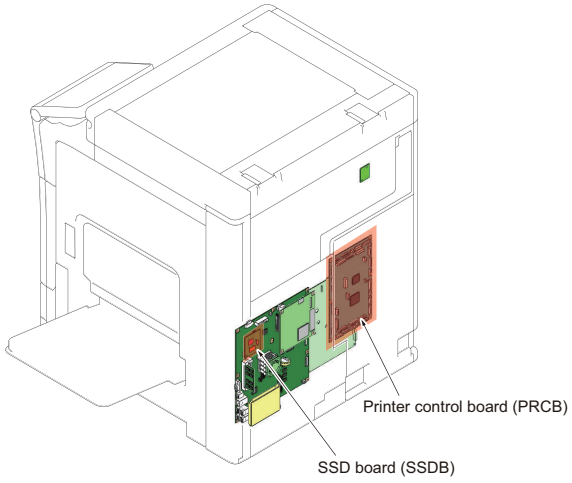

57. C5102, C5103

PARTS LAYOUT DRAWING/1

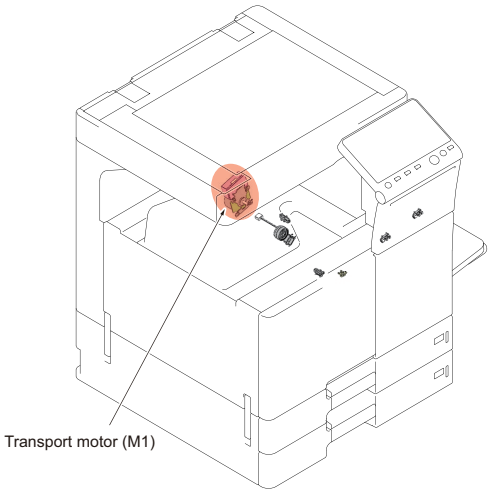

PARTS LAYOUT DRAWING/2

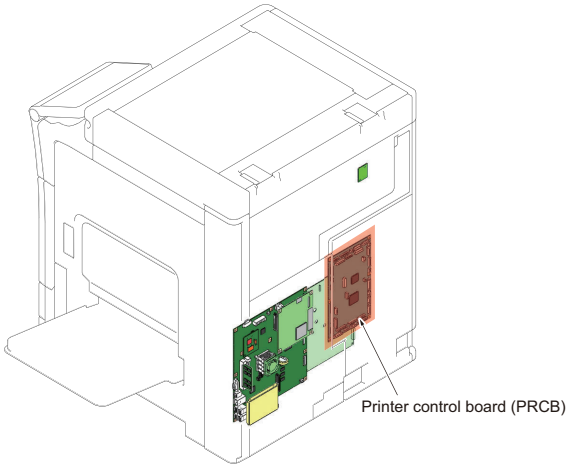

BOARD CONNECTOR LAYOUT DRAWING (PRCB)

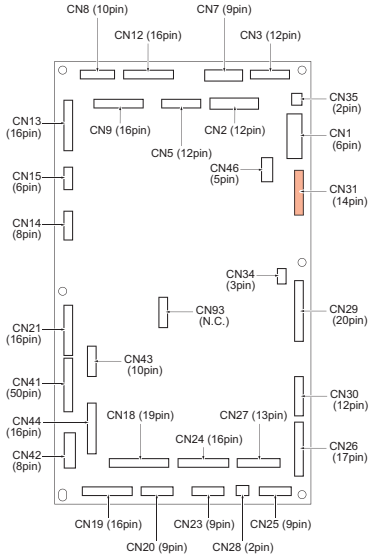

WIRING DIAGRAM

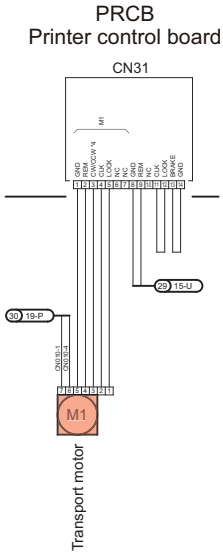

58. C5351

PARTS LAYOUT DRAWING/1

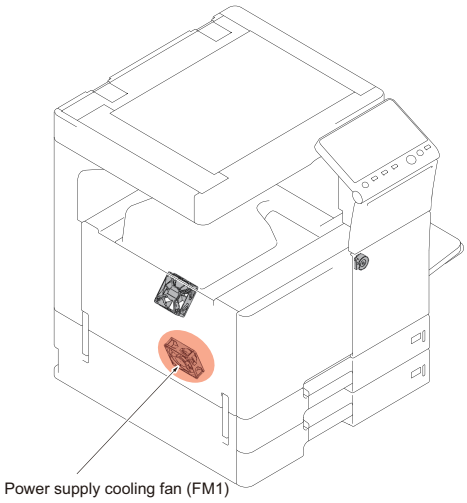

PARTS LAYOUT DRAWING/2

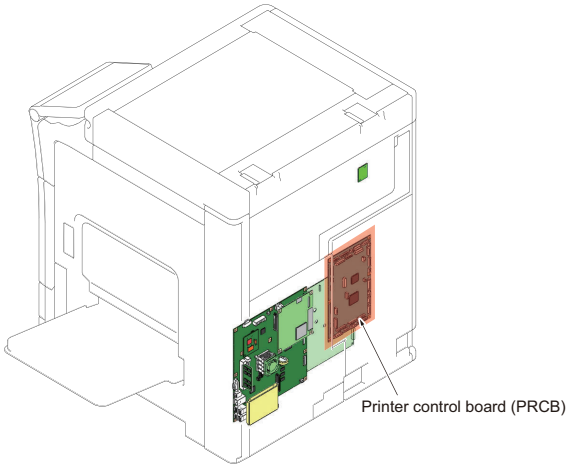

BOARD CONNECTOR LAYOUT DRAWING (PRCB)

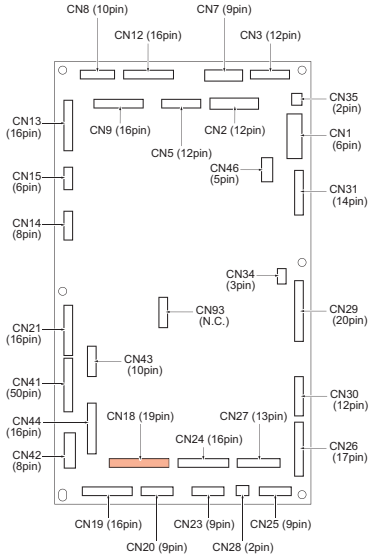

WIRING DIAGRAM

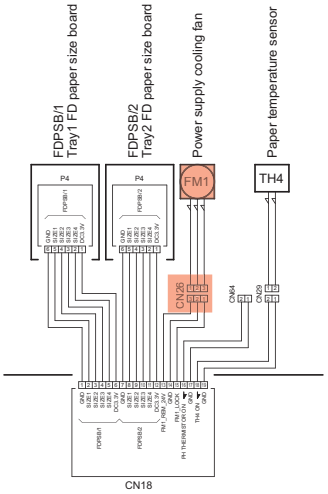

PRCB
Printer control board

RELAY CONNECTOR LAYOUT DRAWING

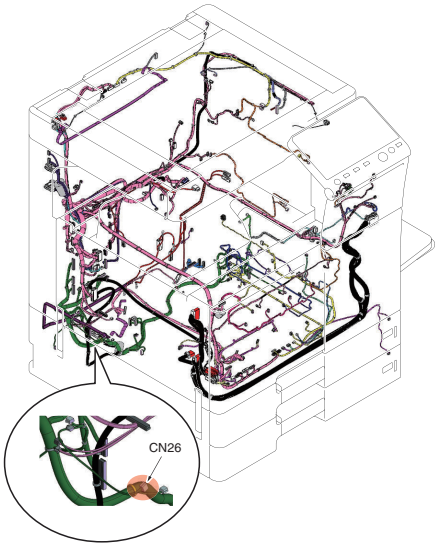

59. C5354

PARTS LAYOUT DRAWING/1

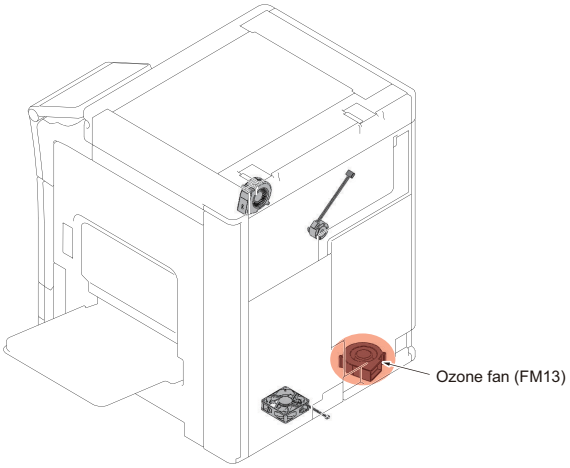

PARTS LAYOUT DRAWING/2

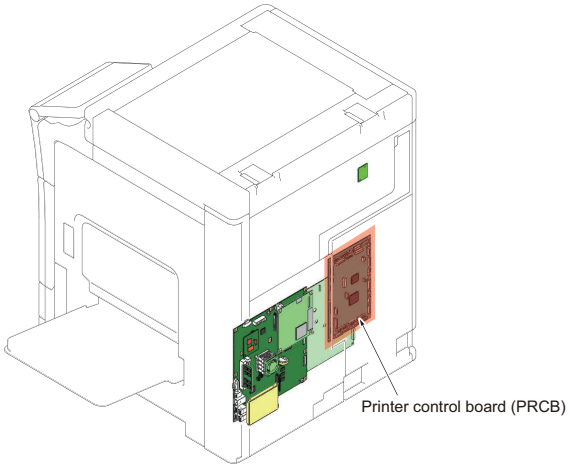

BOARD CONNECTOR LAYOUT DRAWING (PRCB)

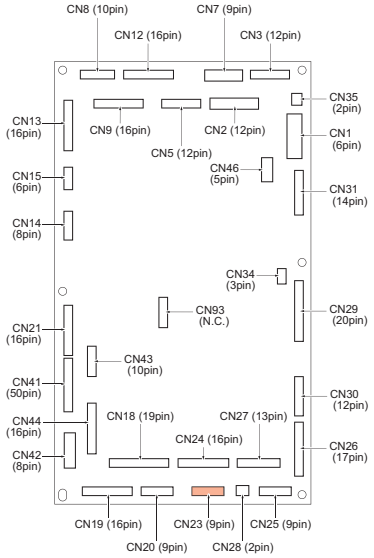

WIRING DIAGRAM

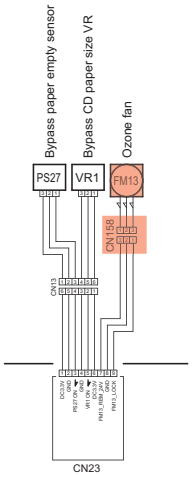

PRCB
Printer control board

RELAY CONNECTOR LAYOUT DRAWING

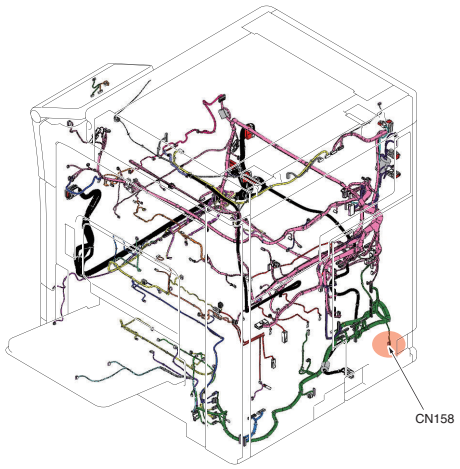

60. C5355

PARTS LAYOUT DRAWING/1

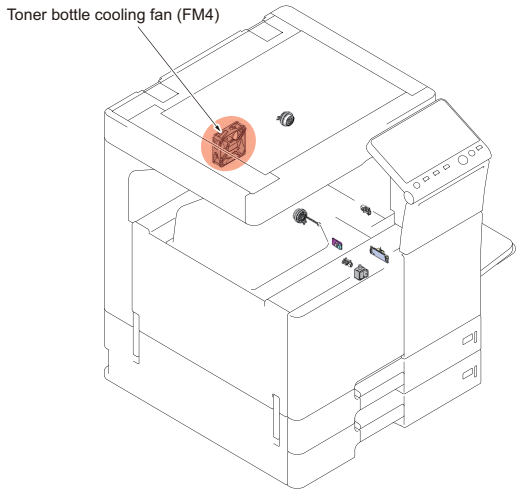

PARTS LAYOUT DRAWING/2

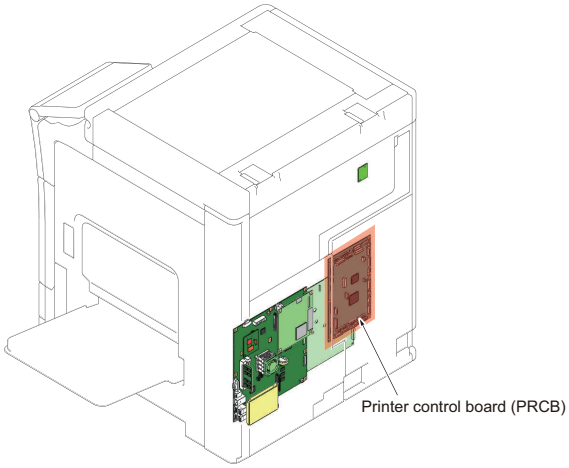

BOARD CONNECTOR LAYOUT DRAWING (PRCB)

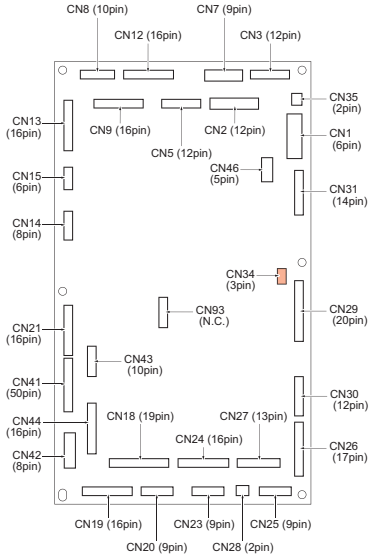

WIRING DIAGRAM

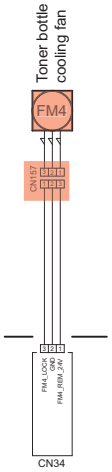

PRCB
Printer control board

RELAY CONNECTOR LAYOUT DRAWING

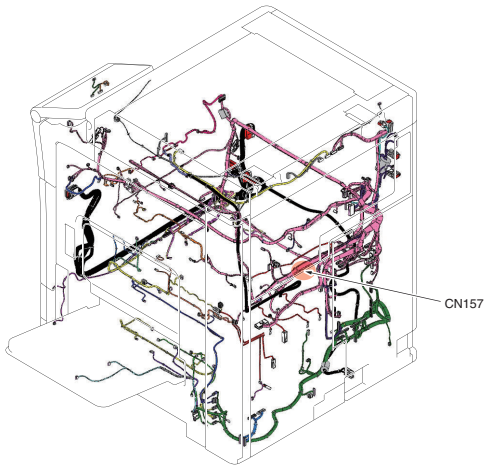

61. C5370

PARTS LAYOUT DRAWING/1

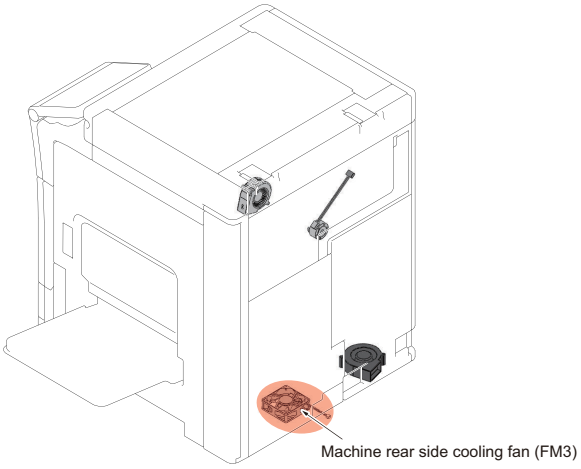

PARTS LAYOUT DRAWING/2

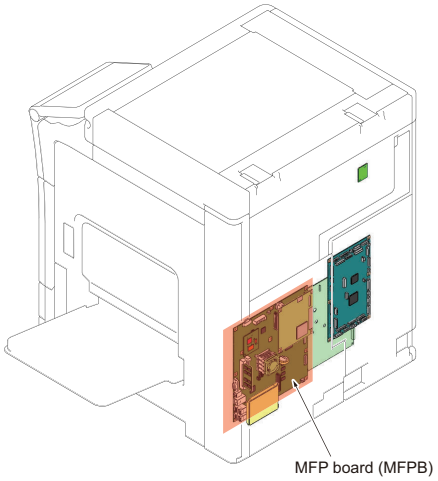

BOARD CONNECTOR LAYOUT DRAWING (MFPB)

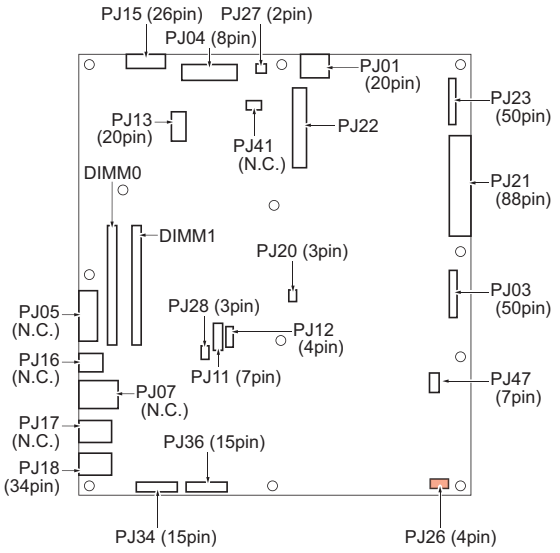

WIRING DIAGRAM

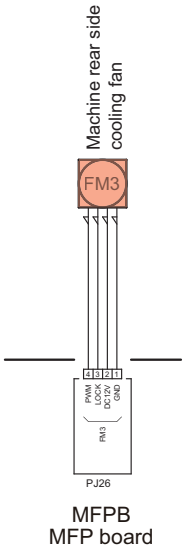

MFPB
MFP board

62. C5372, C6901, C6902, C6903, CA051, CA052, CA053, CC170 - CC186, CC191 - CC214, CC216, CD211, CD212, CD241, CD242, CD261, CD262, CD271, CD401 - CD413, CE001, CE003 - CE305, CEEE1

PARTS LAYOUT DRAWING

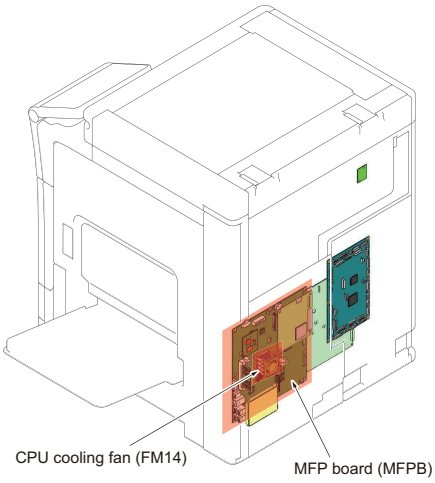

BOARD CONNECTOR LAYOUT DRAWING (MFPB)

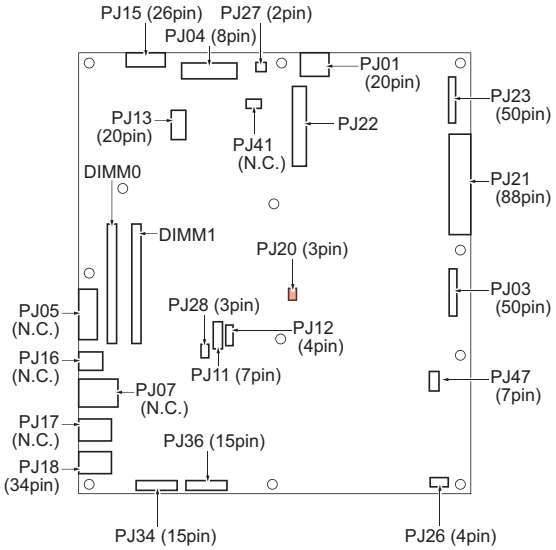

WIRING DIAGRAM

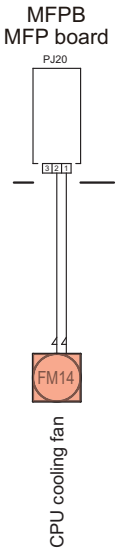

63. C5501

PARTS LAYOUT DRAWING/1

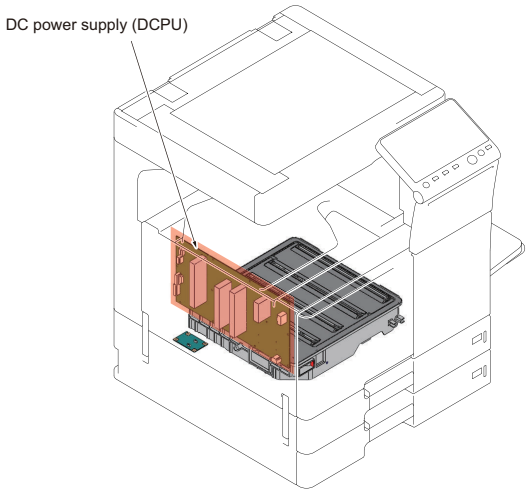

PARTS LAYOUT DRAWING/2

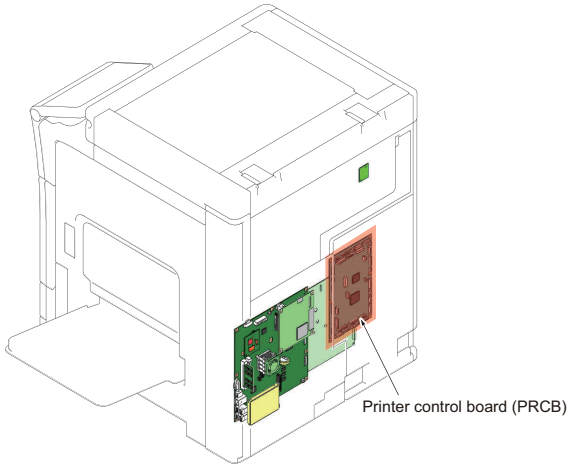

64. C5603

PARTS LAYOUT DRAWING/1

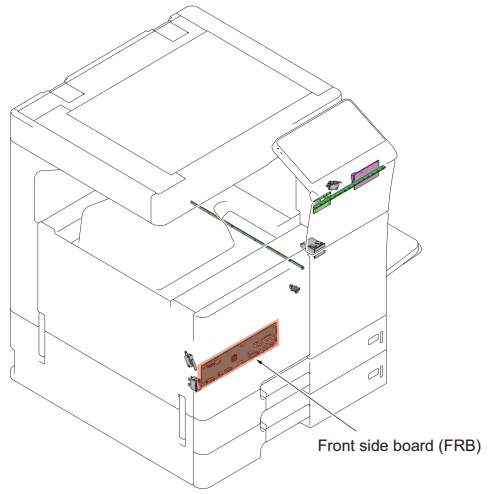

PARTS LAYOUT DRAWING/2

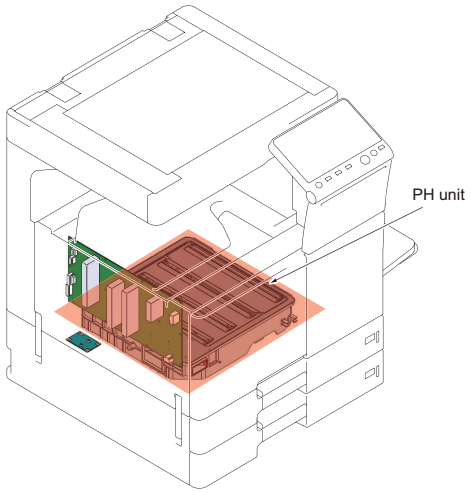

PARTS LAYOUT DRAWING/3

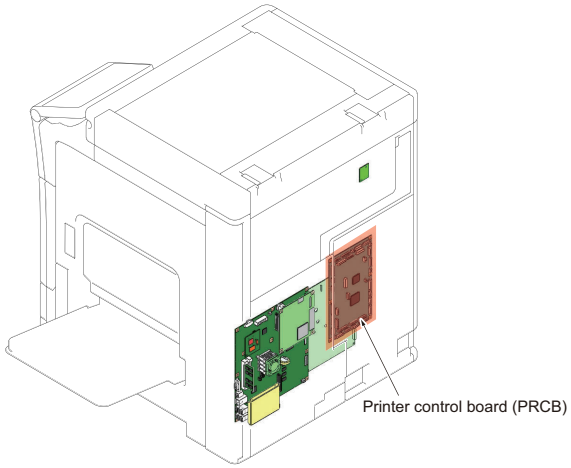

BOARD CONNECTOR LAYOUT DRAWING (FRB)

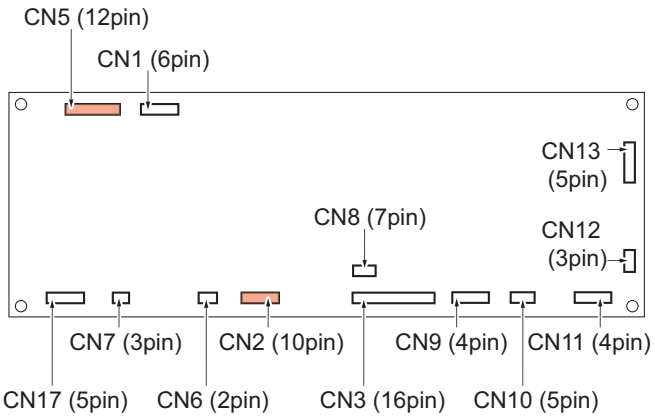

BOARD CONNECTOR LAYOUT DRAWING (PRCB)

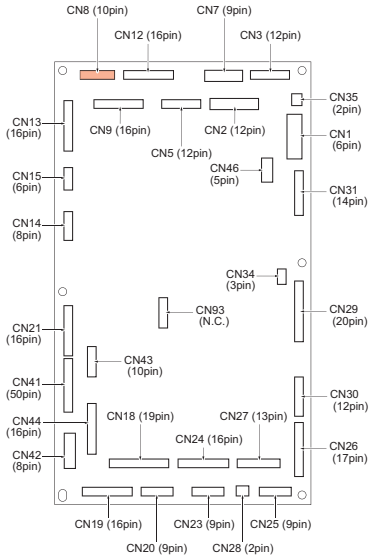

WIRING DIAGRAM

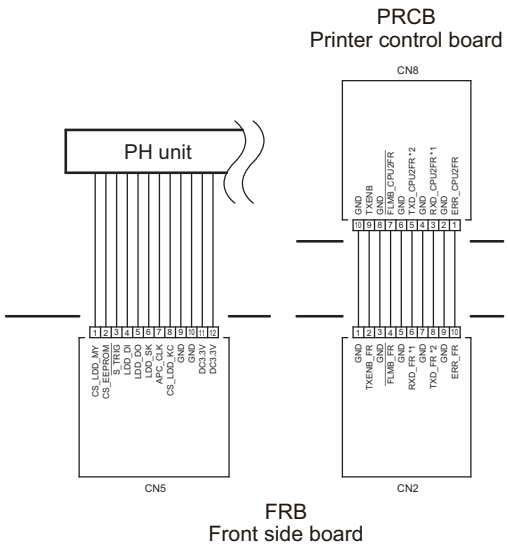

65. C6001

PARTS LAYOUT DRAWING/1 [DF-701]

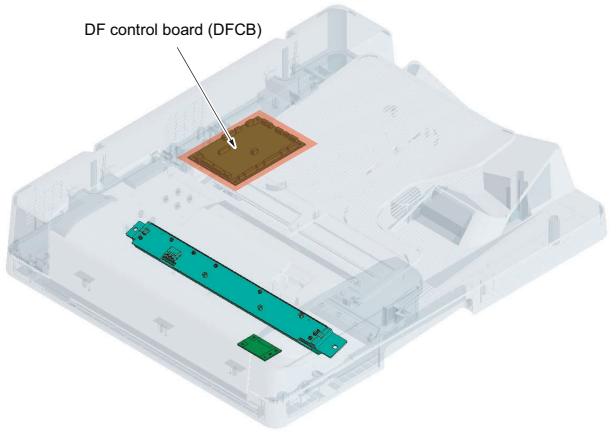

PARTS LAYOUT DRAWING/2 [DF-624]

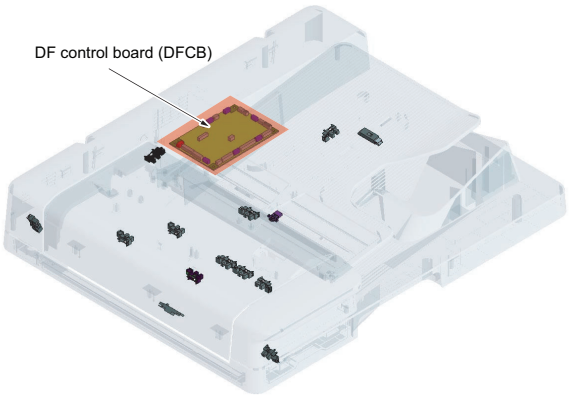

PARTS LAYOUT DRAWING/3

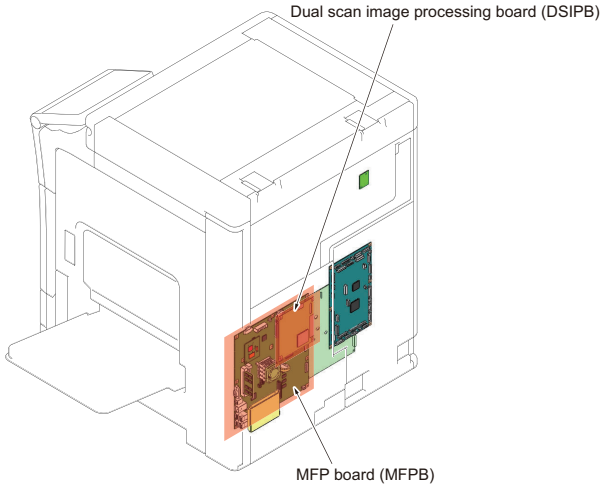

66. C6002

PARTS LAYOUT DRAWING/1 [DF-701]

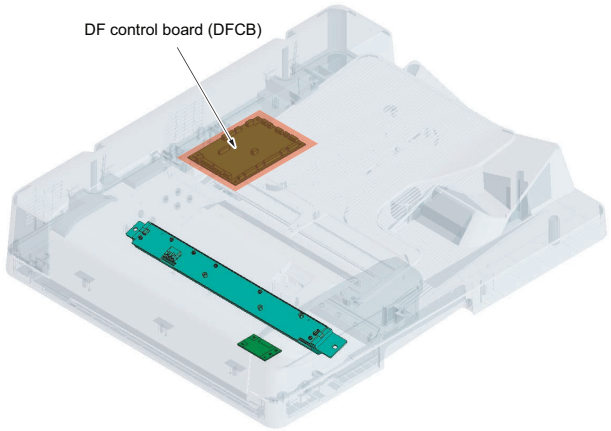

PARTS LAYOUT DRAWING/2 [DF-624]

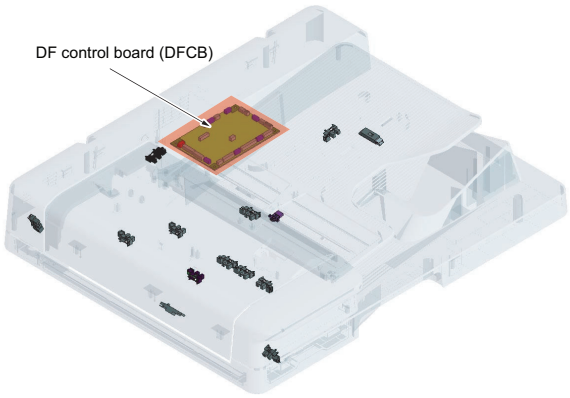

PARTS LAYOUT DRAWING/3

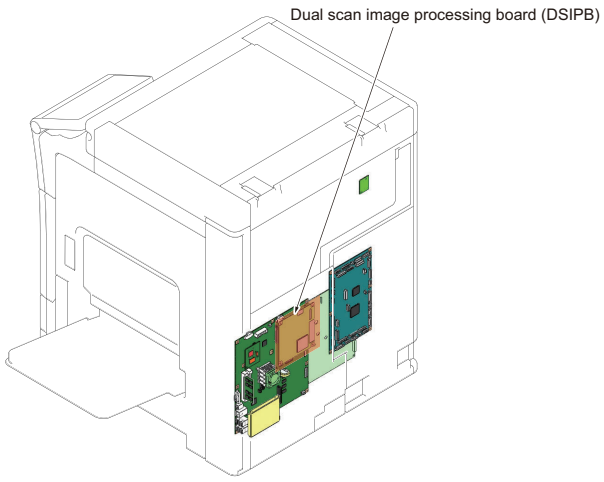

67. C6102, C6103

PARTS LAYOUT DRAWING/1

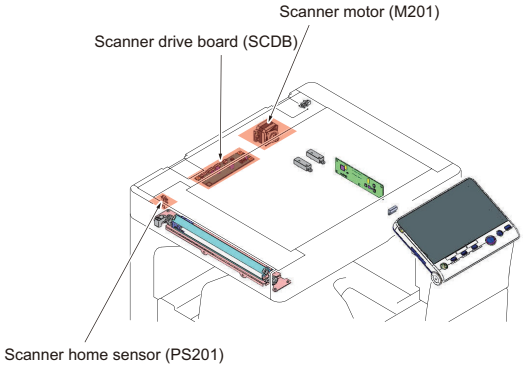

PARTS LAYOUT DRAWING/2

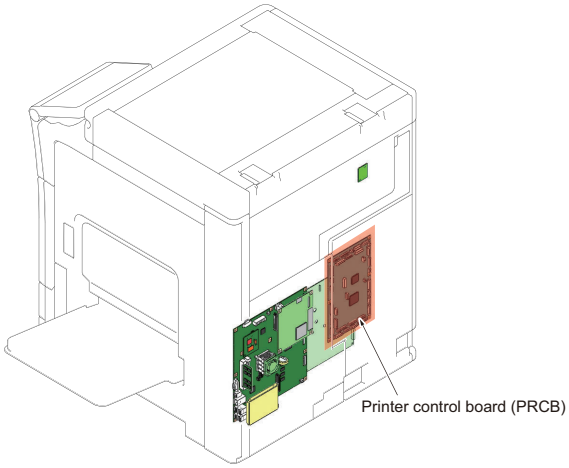

BOARD CONNECTOR LAYOUT DRAWING (SCDB)

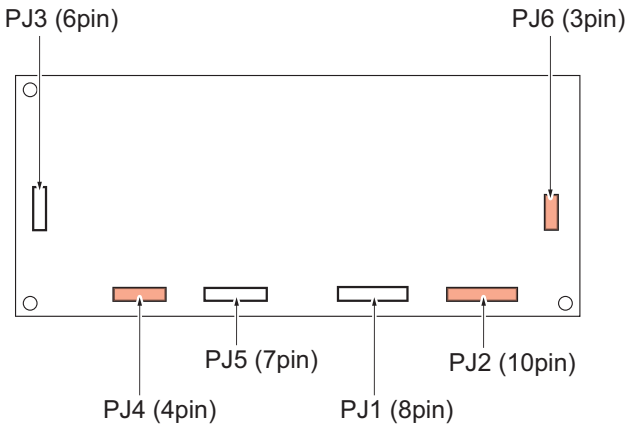

BOARD CONNECTOR LAYOUT DRAWING (PRCB)

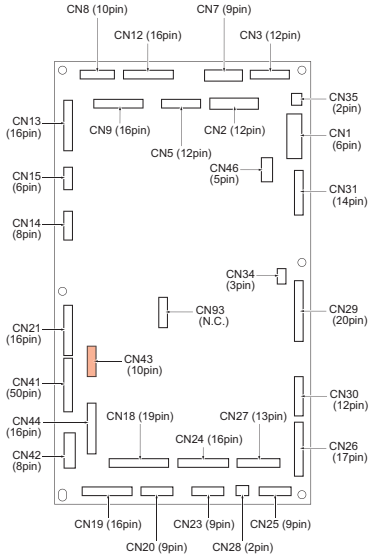

WIRING DIAGRAM

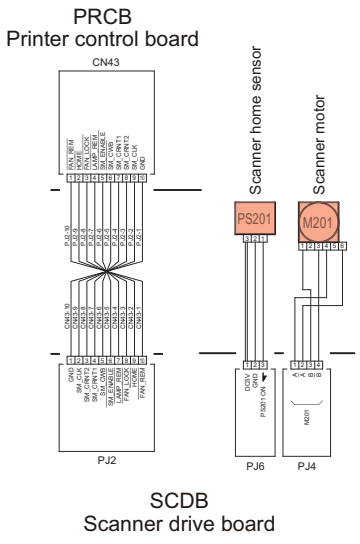

68. C6104, C6105

PARTS LAYOUT DRAWING/1

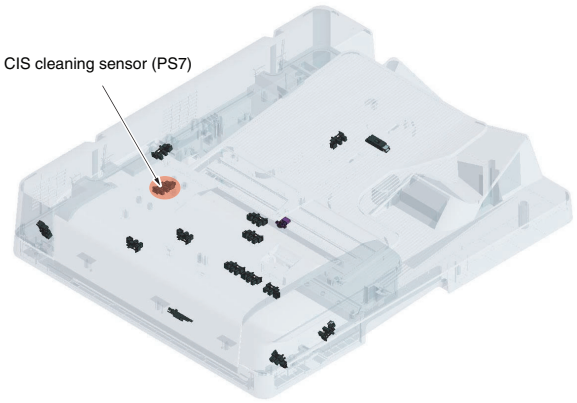

PARTS LAYOUT DRAWING/2

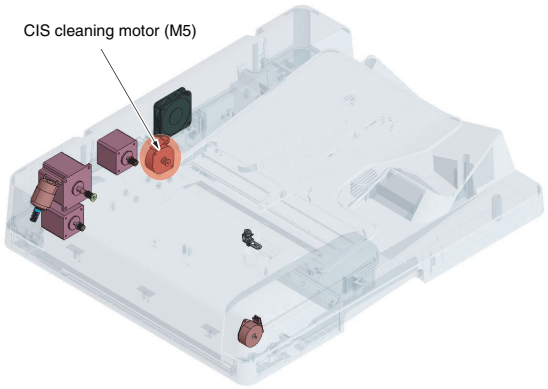

PARTS LAYOUT DRAWING/3

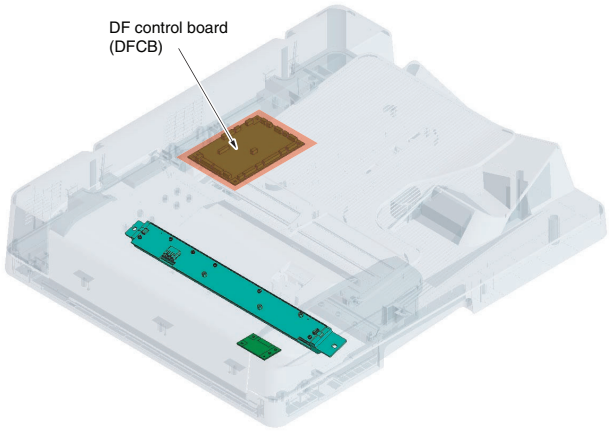

BOARD CONNECTOR LAYOUT DRAWING (DFCB)

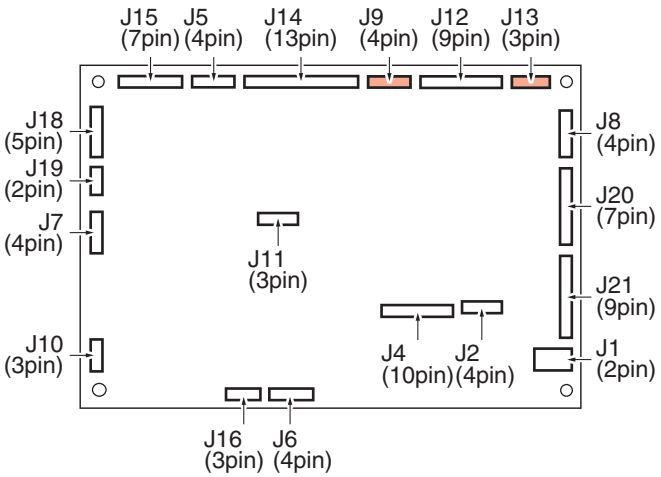

WIRING DIAGRAM

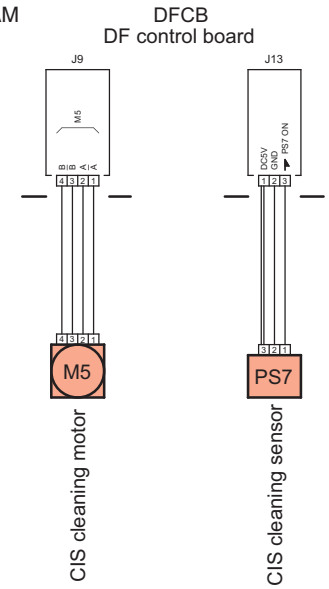

69. C6704, C6752, CDF50, CDF70, CDFA0

PARTS LAYOUT DRAWING/1

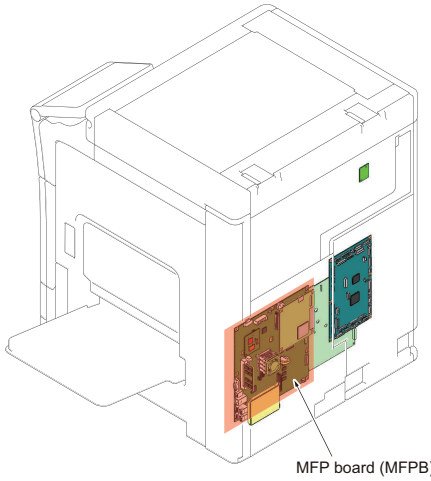

PARTS LAYOUT DRAWING/2

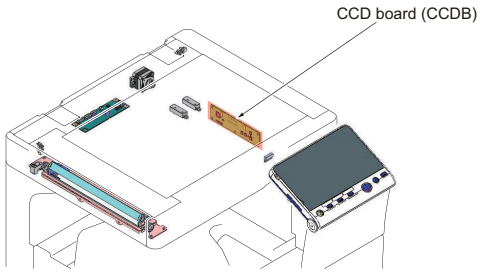

70. C6751

PARTS LAYOUT DRAWING/1

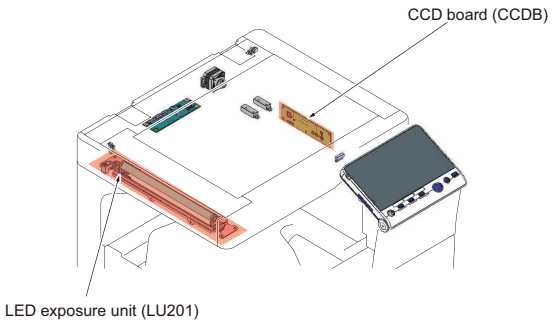

PARTS LAYOUT DRAWING/2

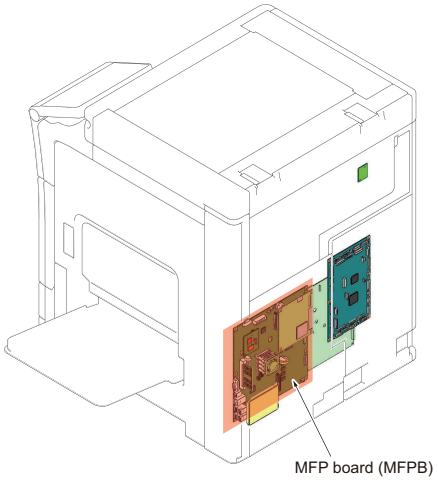

BOARD CONNECTOR LAYOUT DRAWING (MFPB)

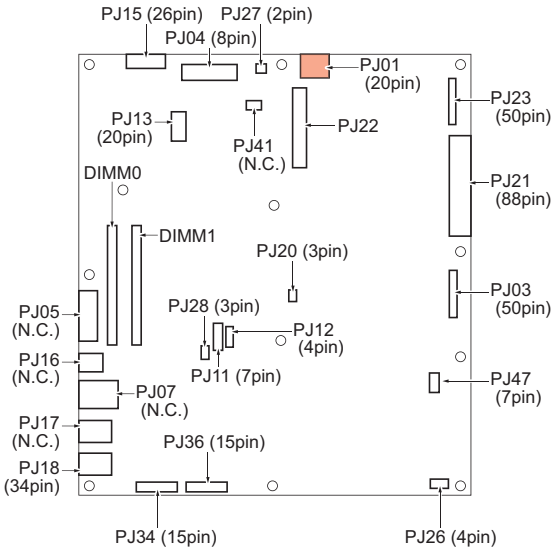

WIRING DIAGRAM

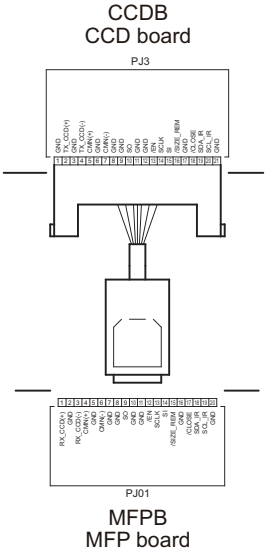

71. C6753

PARTS LAYOUT DRAWING/1

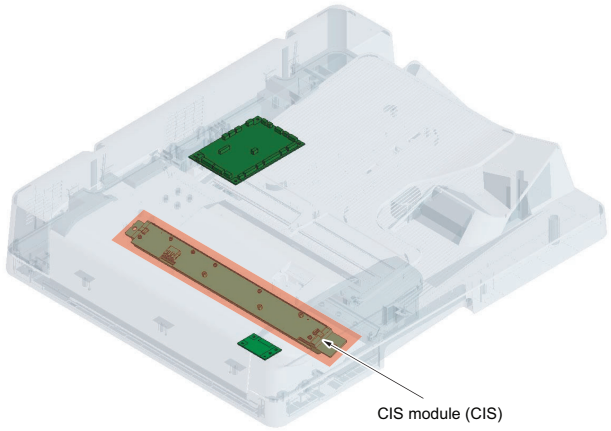

PARTS LAYOUT DRAWING/2

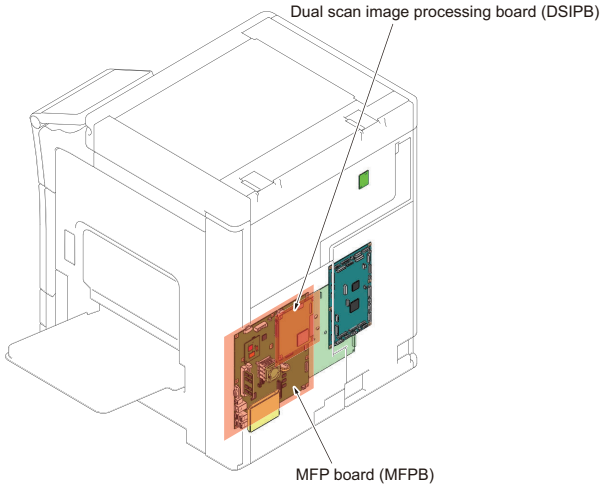

72. C6754, C6755, C9403, C9404

PARTS LAYOUT DRAWING/1

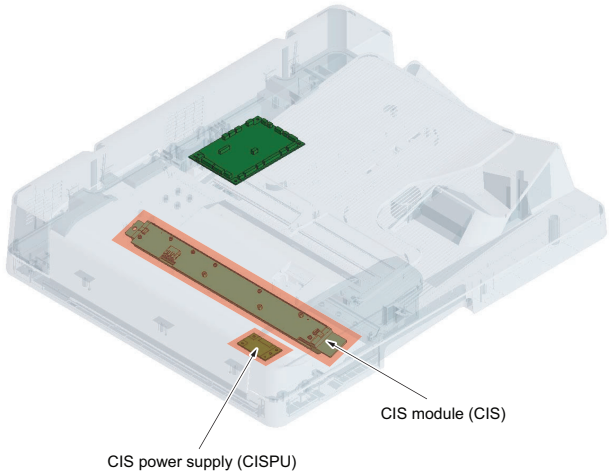

PARTS LAYOUT DRAWING/2

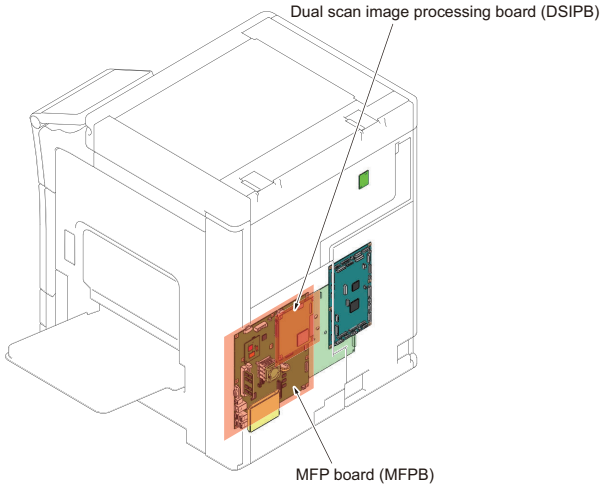

73. C6756

PARTS LAYOUT DRAWING/1

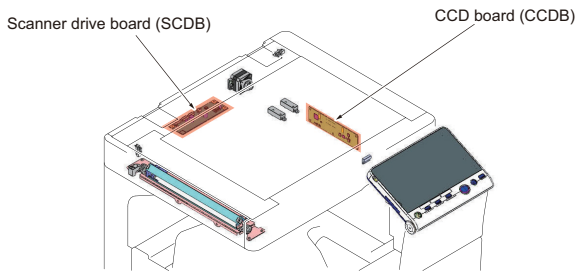

PARTS LAYOUT DRAWING/2

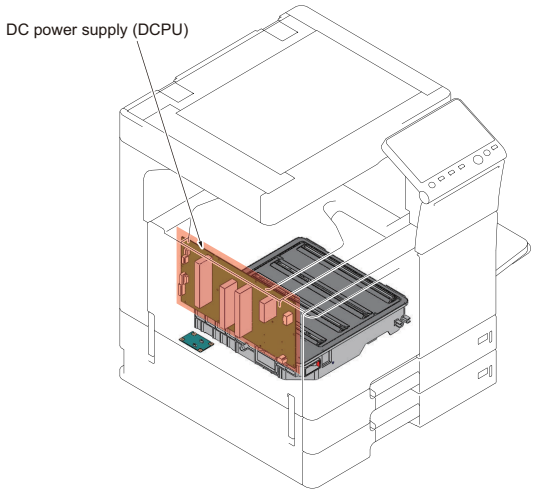

74. C6911, C6912, C6913, CDF51, CDF71, CDFA1

PARTS LAYOUT DRAWING

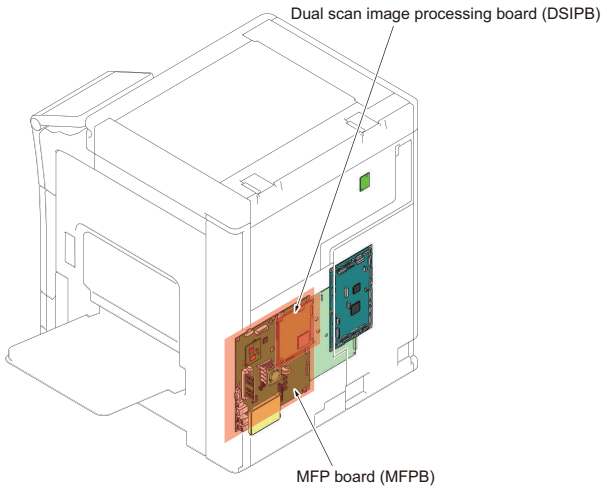

75. C6F01

PARTS LAYOUT DRAWING/1

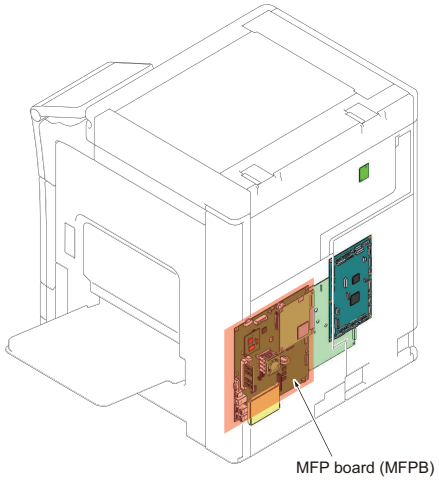

PARTS LAYOUT DRAWING/2 [DF-701]

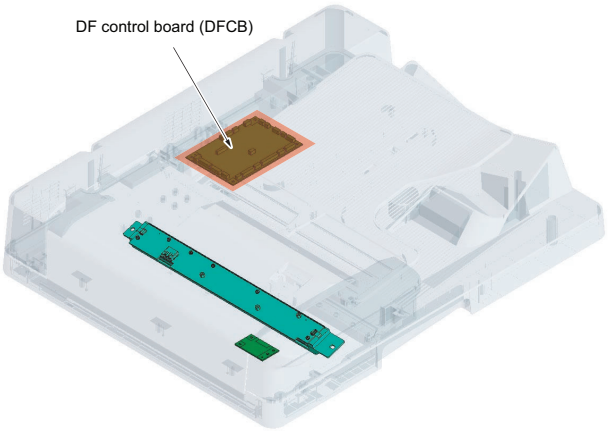

PARTS LAYOUT DRAWING/3 [DF-624]

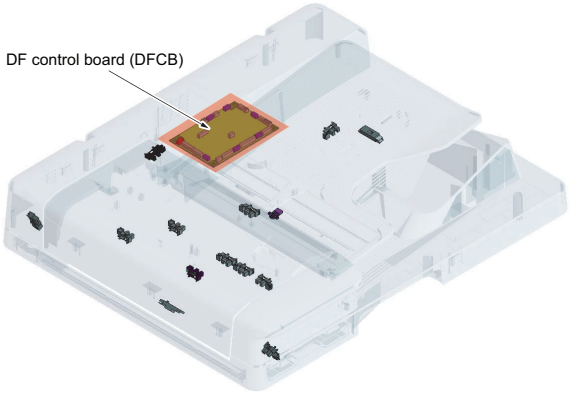

76. C8101

76.1 DF-624

PARTS LAYOUT DRAWING/1

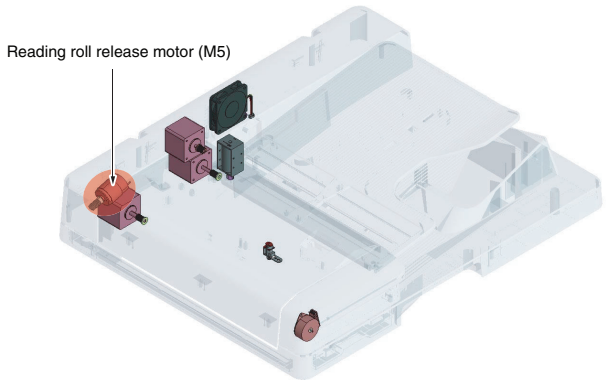

PARTS LAYOUT DRAWING/2

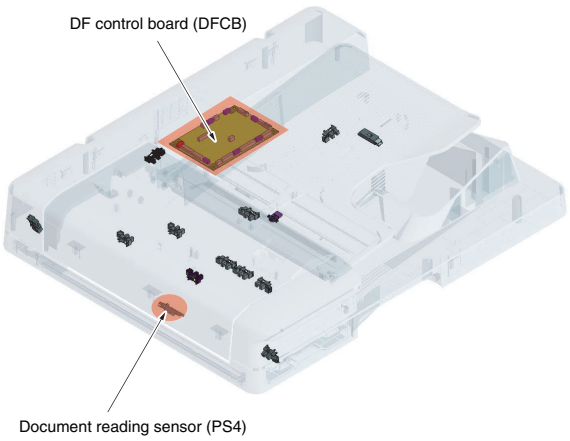

BOARD CONNECTOR LAYOUT DRAWING (DFCB)

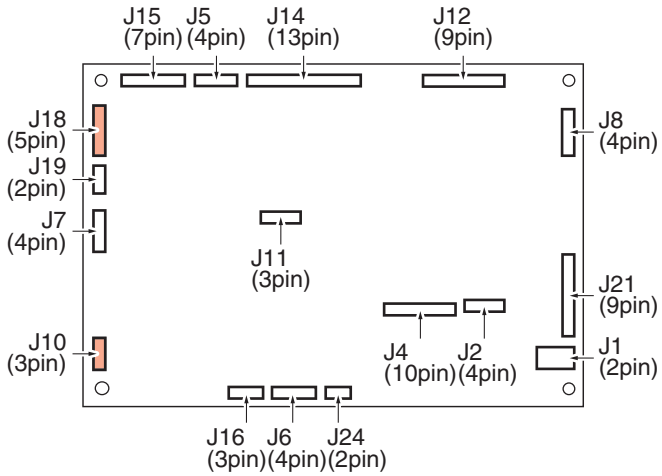

WIRING DIAGRAM

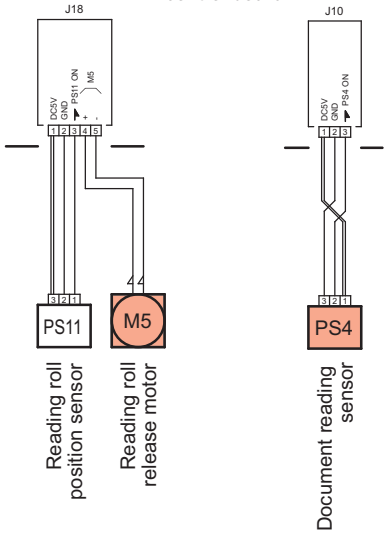

76.2 DF-701

PARTS LAYOUT DRAWING/1

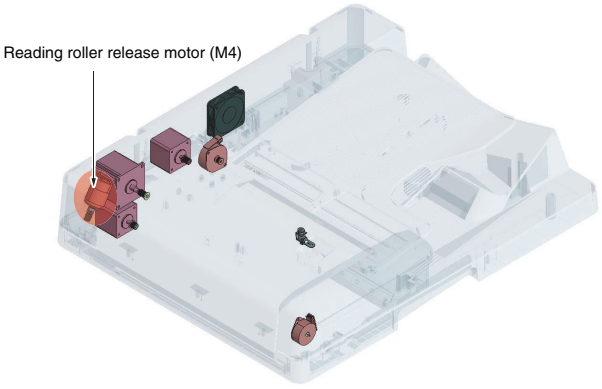

PARTS LAYOUT DRAWING/2

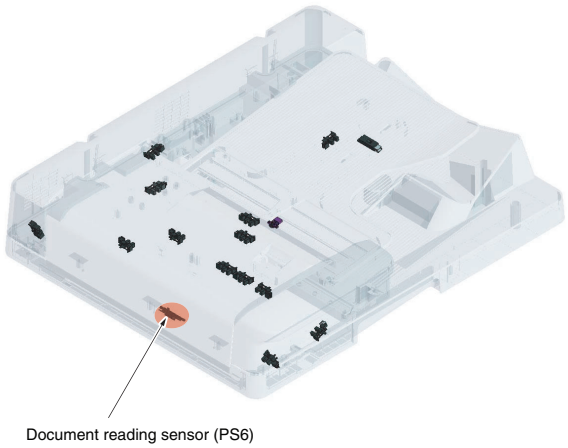

PARTS LAYOUT DRAWING/3

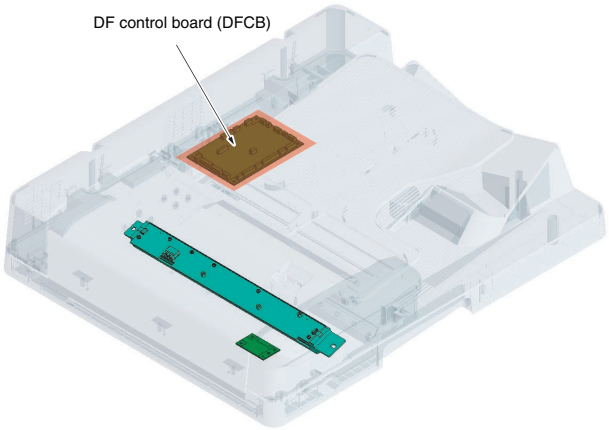

BOARD CONNECTOR LAYOUT DRAWING (DFCB)

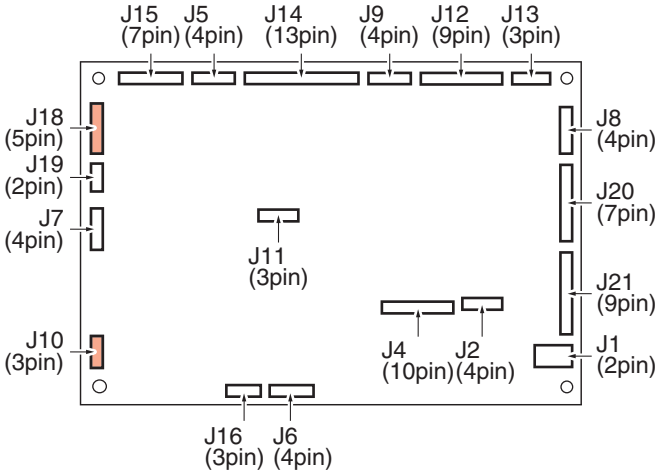

WIRING DIAGRAM

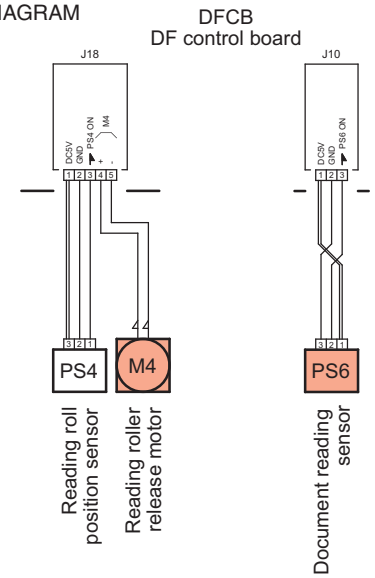

77. C8107

77.1 DF-624

PARTS LAYOUT DRAWING/1

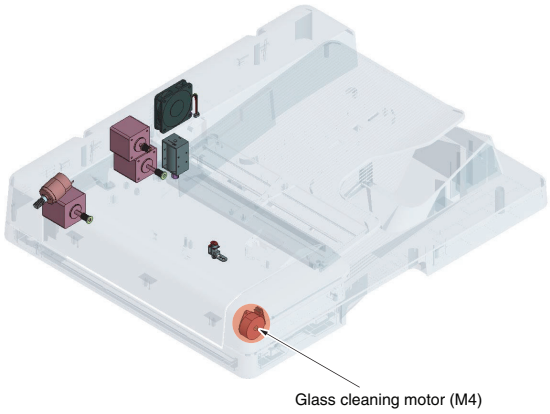

PARTS LAYOUT DRAWING/2

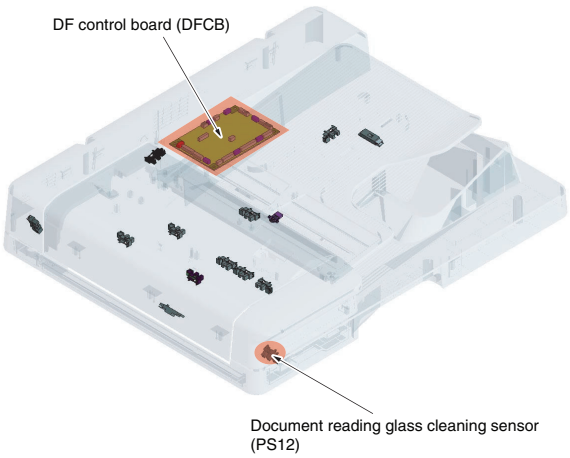

BOARD CONNECTOR LAYOUT DRAWING (DFCB)

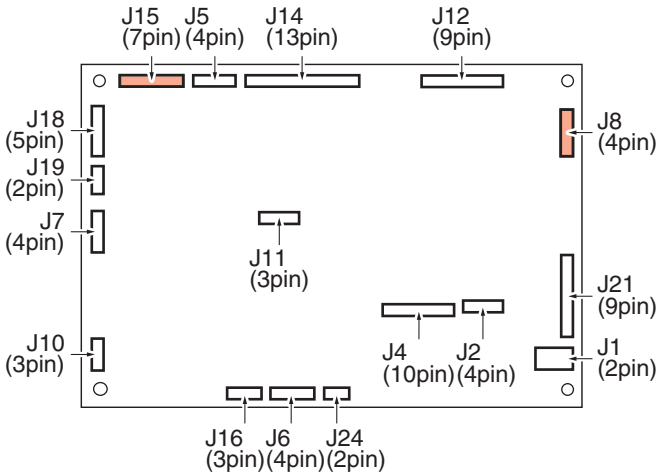

WIRING DIAGRAM

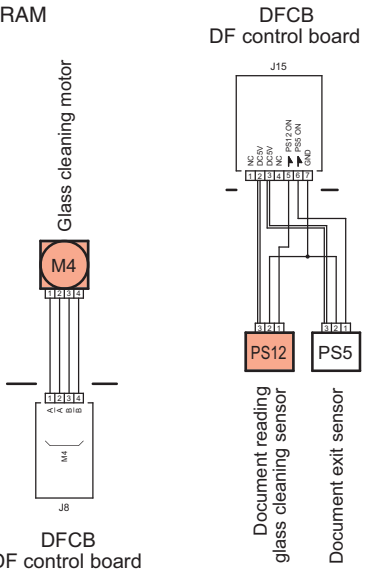

77.2 DF-701

PARTS LAYOUT DRAWING/1

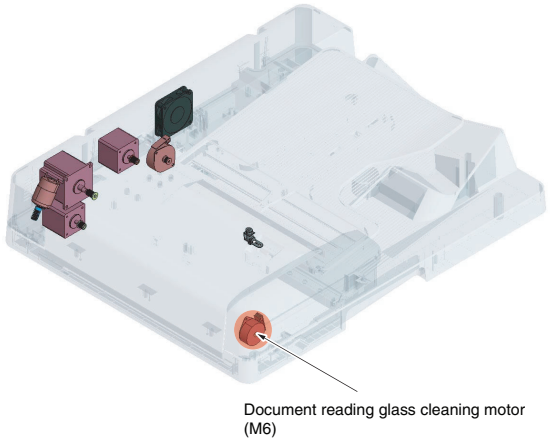

PARTS LAYOUT DRAWING/2

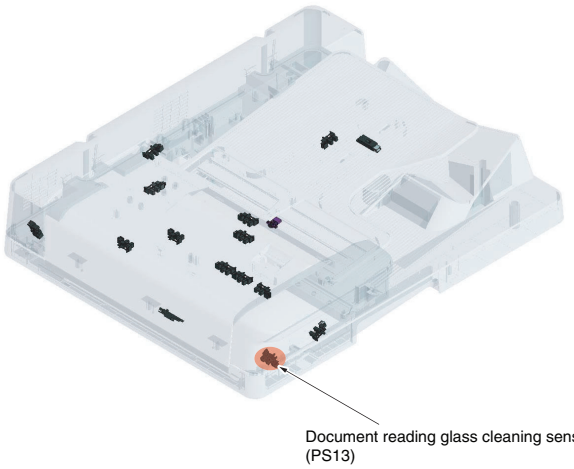

PARTS LAYOUT DRAWING/3

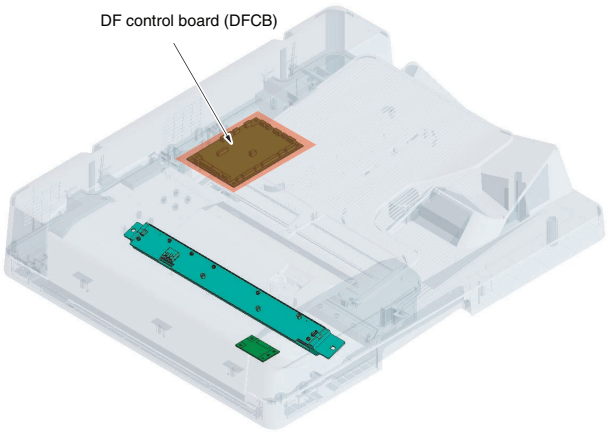

BOARD CONNECTOR LAYOUT DRAWING (DFCB)

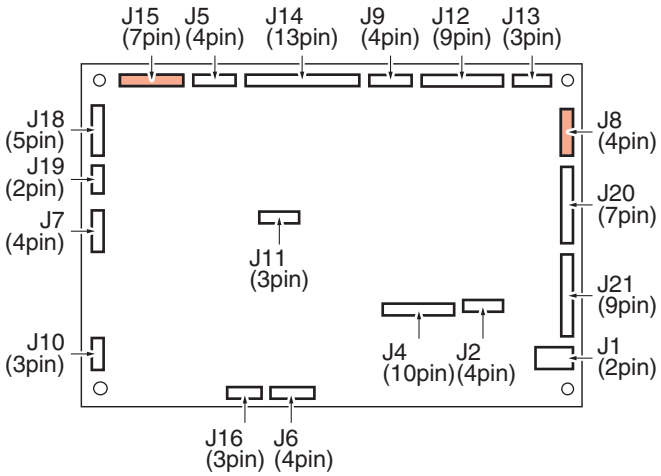

WIRING DIAGRAM

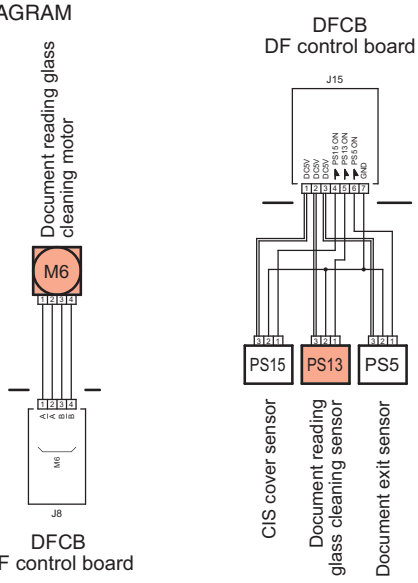

78. C8302

78.1 DF-624

PARTS LAYOUT DRAWING/1

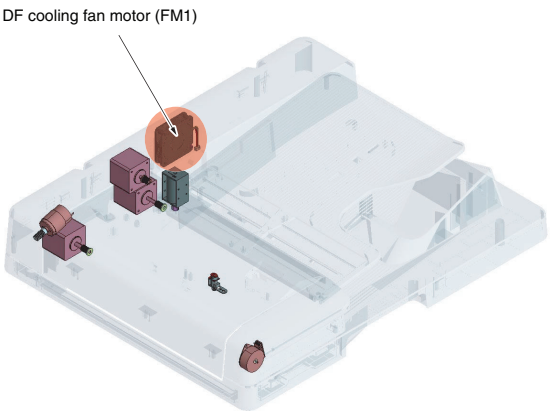

PARTS LAYOUT DRAWING/2

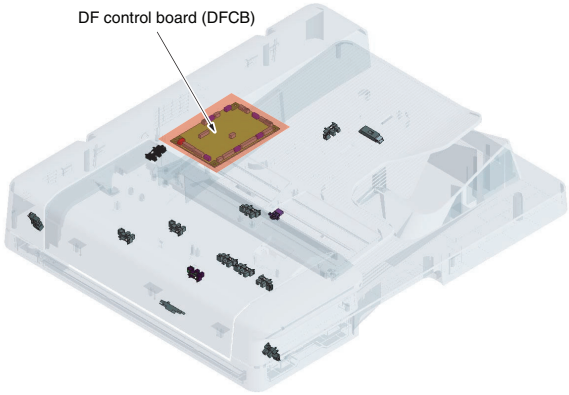

BOARD CONNECTOR LAYOUT DRAWING (DFCB)

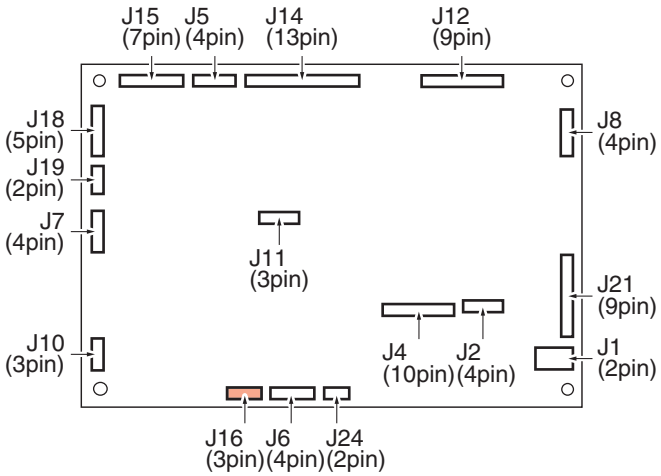

WIRING DIAGRAM

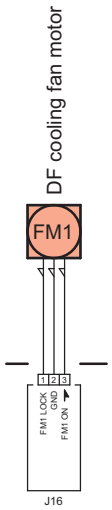

DFCB
DF control board

78.2 DF-701

PARTS LAYOUT DRAWING/1

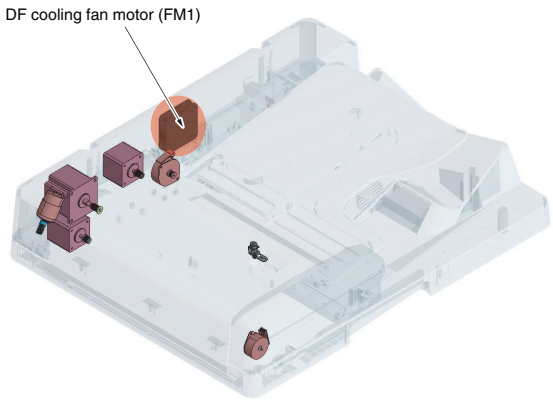

PARTS LAYOUT DRAWING/2

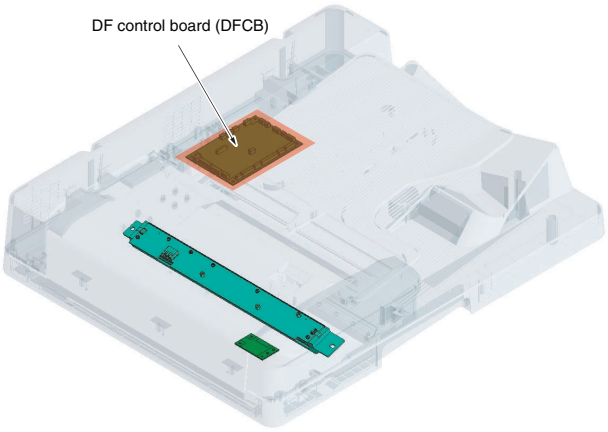

BOARD CONNECTOR LAYOUT DRAWING (DFCB)

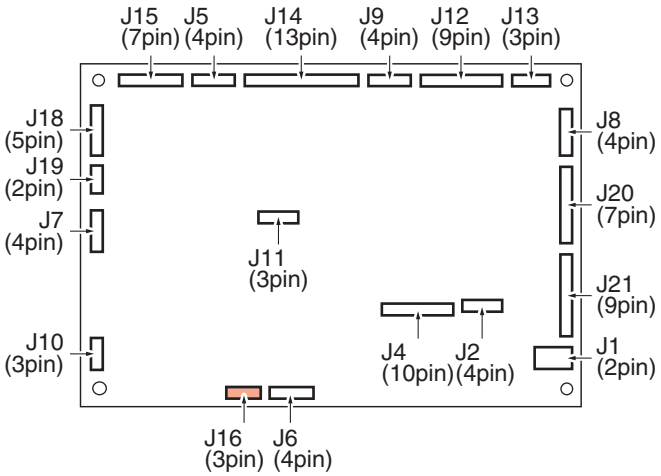

WIRING DIAGRAM

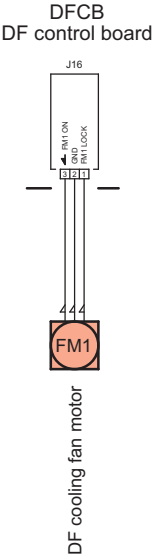

79. C8401, CC156, CC165

PARTS LAYOUT DRAWING/1 [DF-701]

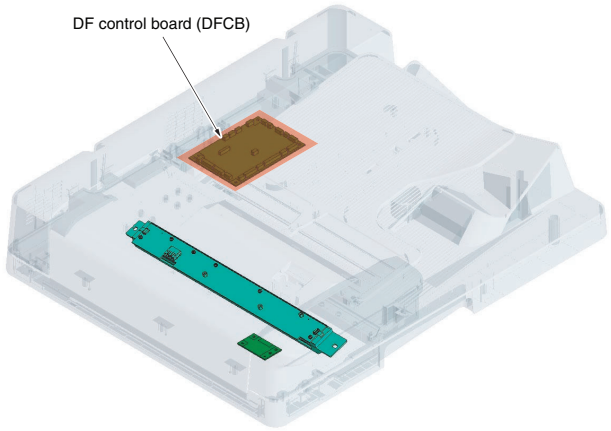

PARTS LAYOUT DRAWING/2 [DF-624]

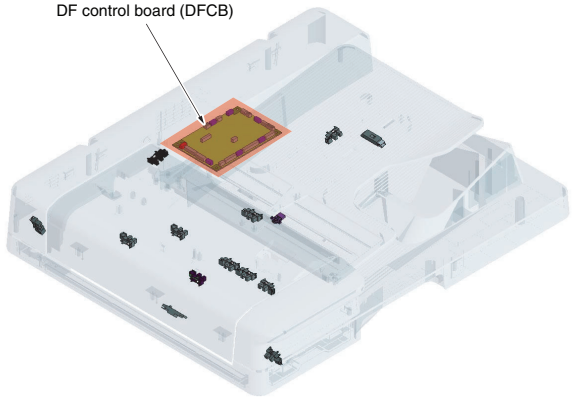

80. C9401, C9402

PARTS LAYOUT DRAWING/1

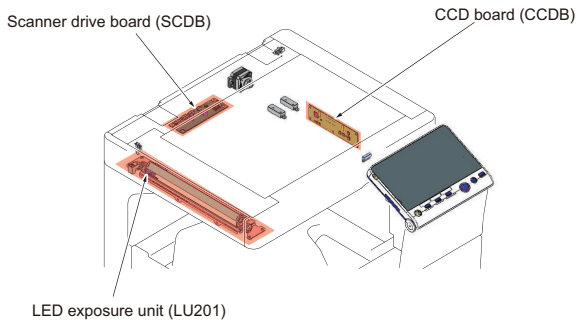

PARTS LAYOUT DRAWING/2

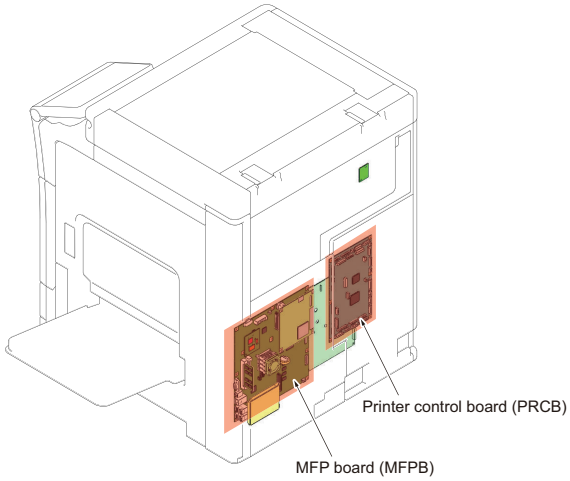

BOARD CONNECTOR LAYOUT DRAWING (SCDB/PRCB/MFPB)

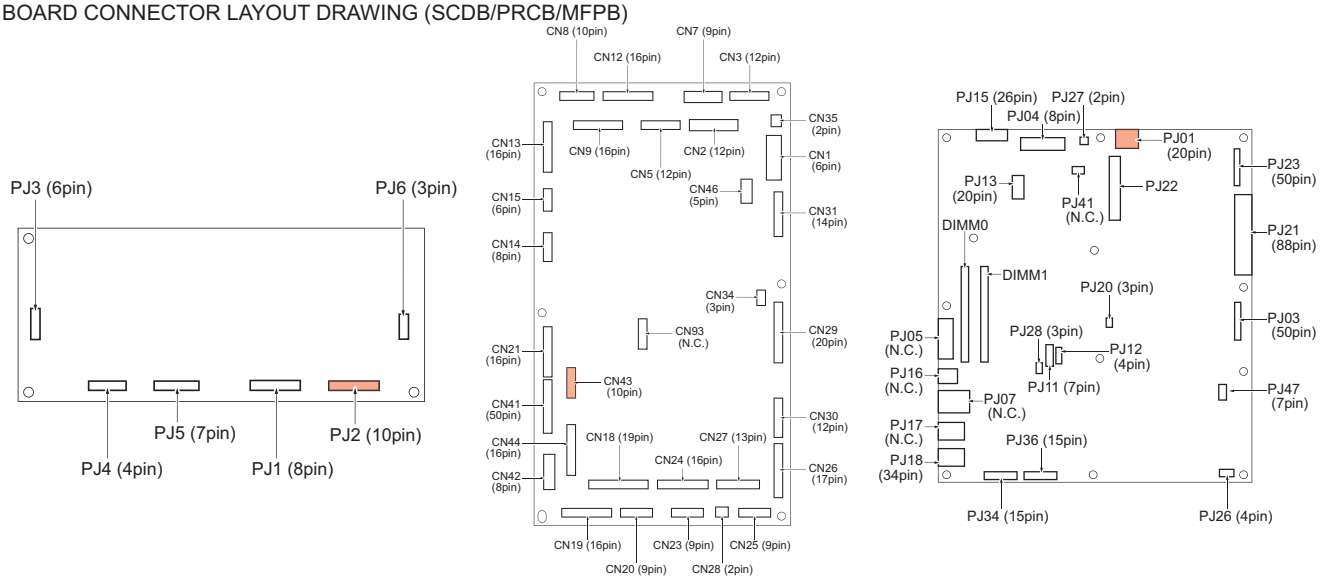

WIRING DIAGRAM

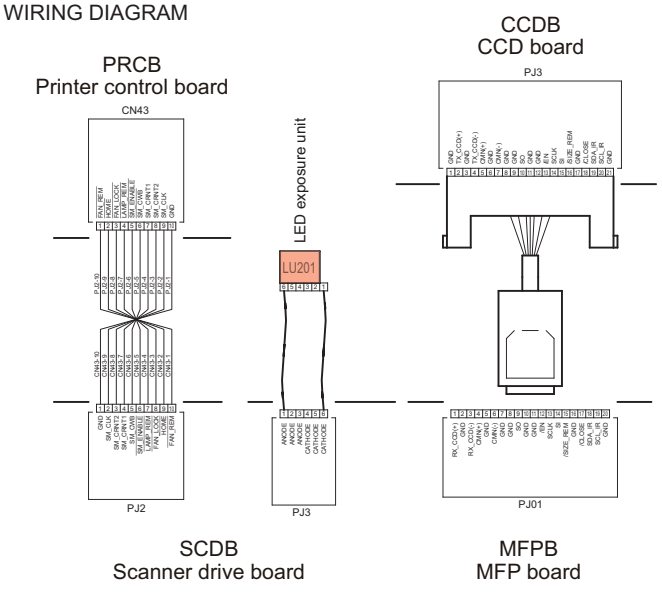

81. CC001

PARTS LAYOUT DRAWING

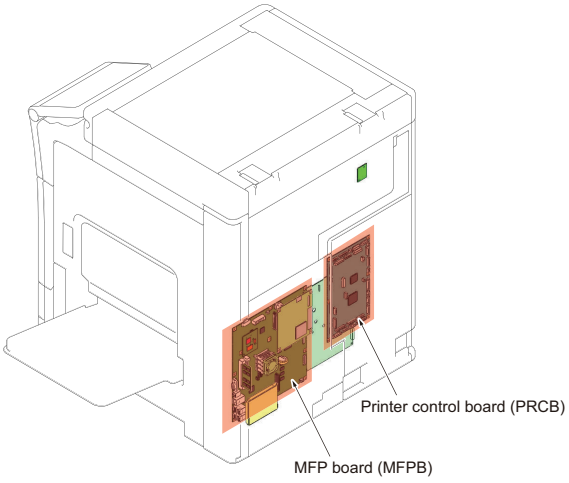

BOARD CONNECTOR LAYOUT DRAWING (PRCB)

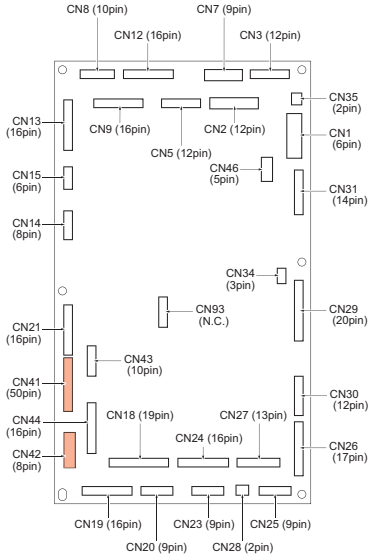

BOARD CONNECTOR LAYOUT DRAWING (MFPB)

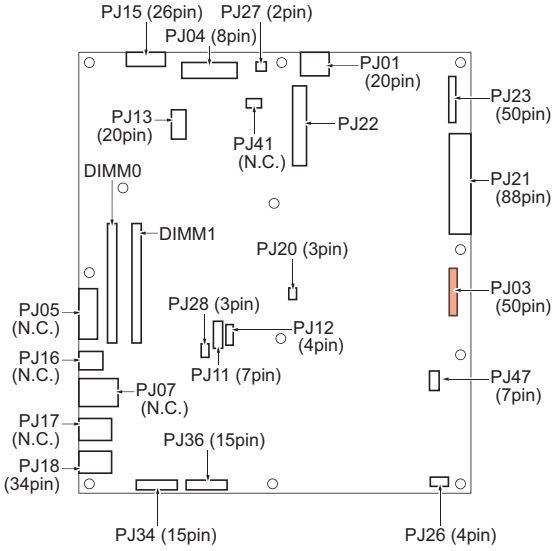

WIRING DIAGRAM

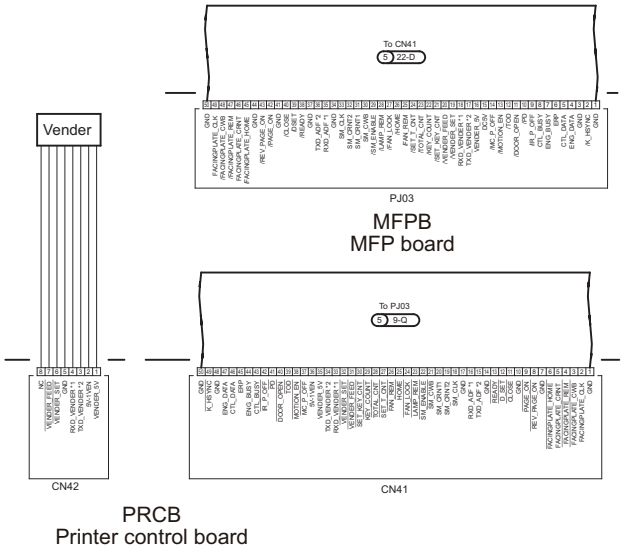

82. CC15B

PARTS LAYOUT DRAWING

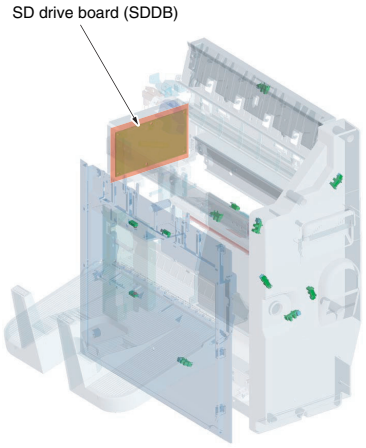

83. CC164

PARTS LAYOUT DRAWING

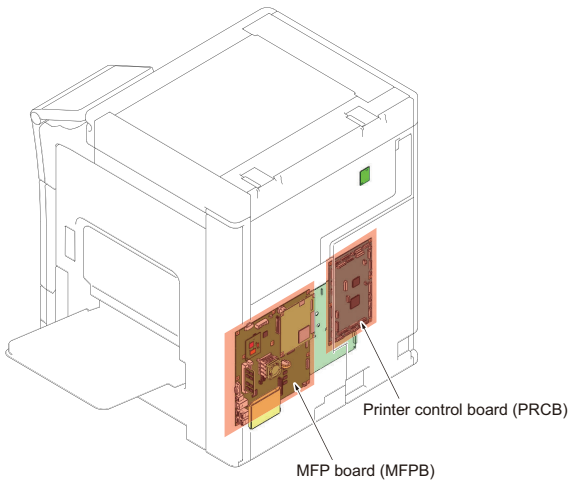

84. CC190, CD002, CD004, CD00F, CD020

PARTS LAYOUT DRAWING

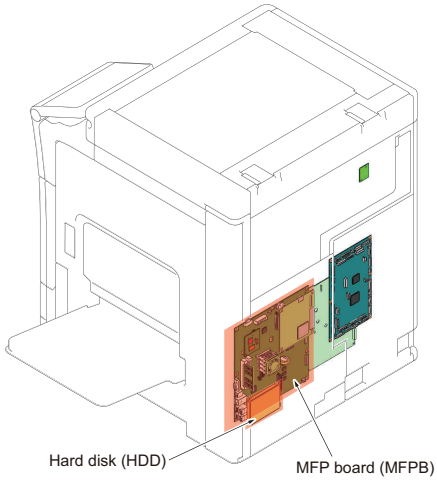

BOARD CONNECTOR LAYOUT DRAWING (MFPB)

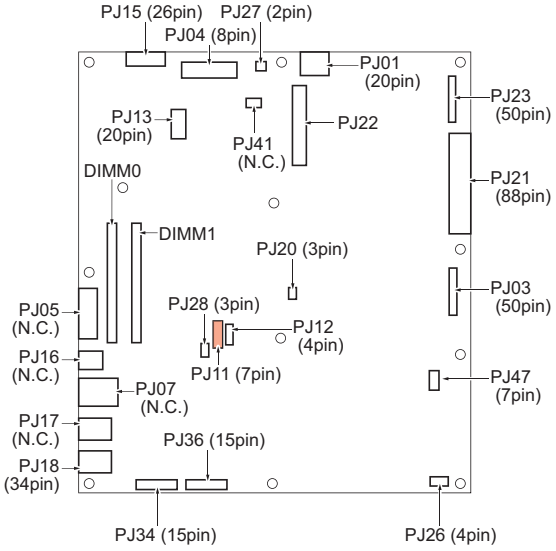

WIRING DIAGRAM

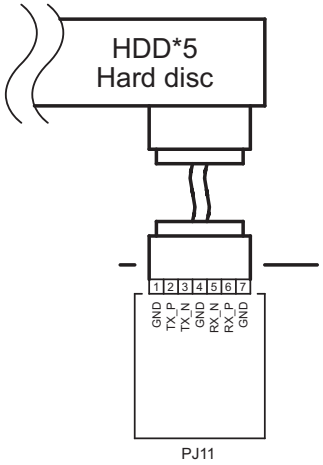

PRCB
Printer control board

*5 bizhub C224e for Europe : Option(HD-517)
Other the above : Standard

85. CD010, CD272, CE002

PARTS LAYOUT DRAWING

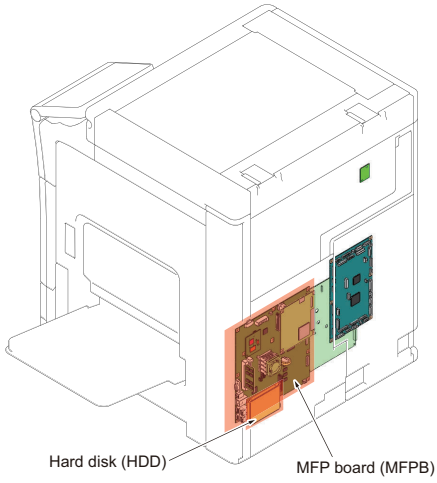

86. CD011, CD012, CD030, CD041 - CD04B

PARTS LAYOUT DRAWING

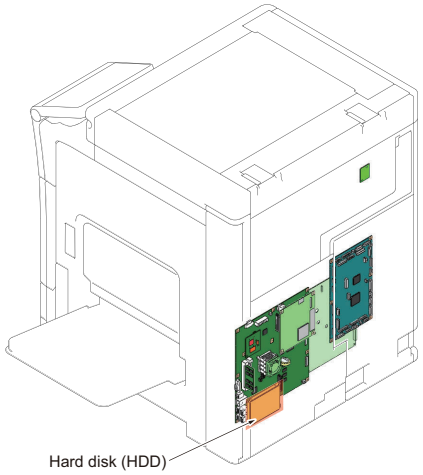

87. CD201, CD202, CD203

PARTS LAYOUT DRAWING

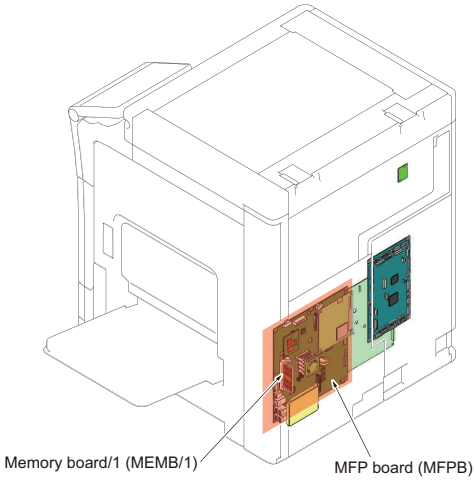

88. CD3A0

PARTS LAYOUT DRAWING

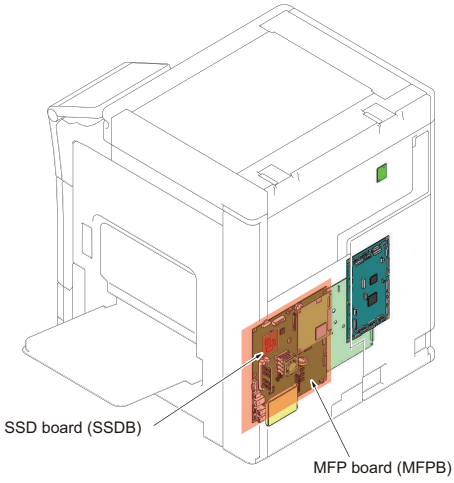

89. CED01

PARTS LAYOUT DRAWING

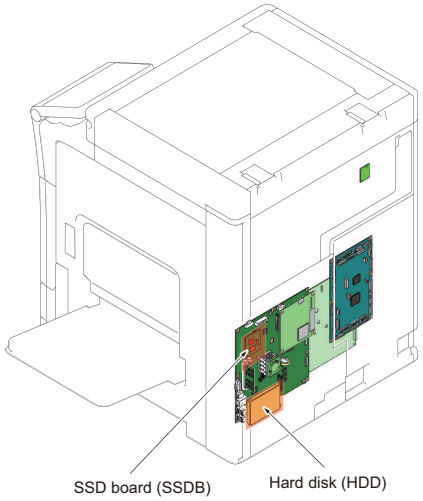

90. CEEE2

PARTS LAYOUT DRAWING

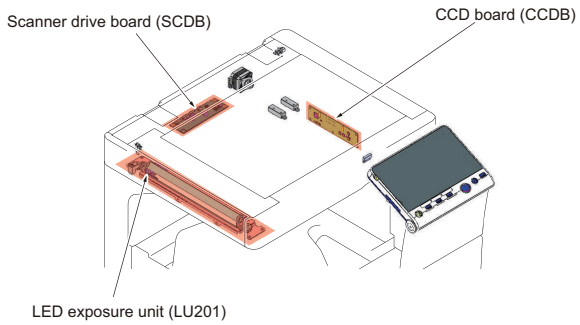



© 2013 KONICA MINOLTA,INC.

Use of this manual should be strictly supervised to avoid disclosure of confidential information.